REQUEST TO ESTABLISH DOCKET

(PLEASE TYPE)

Date: 1/27/00 Docket No. 000102-TL

1. Division Name/Staff Name: CMU/Marsh

2. OPR: ~~CMU/Marsh~~ Legal

3. OCR: CAF/Stokes

4. Suggested Docket Title: Complaint of ABA Professional Association, Inc. against BellSouth Telecommunications, Inc., regarding billing for ISDN service

5. Suggested Docket Mailing List (attach separate sheet if necessary)

   A. Provide NAMES ONLY for regulated companies or ACRONYMS ONLY regulated industries, as shown in Rule 25-22.104, F.A.C.
   B. Provide COMPLETE name and address for all others. (Match representatives to clients.)

   1. Parties and their representatives (if any)

BellSouth Telecommunications, Inc.

Manuel Lora/ABA Professional Association, Inc.

801 Brickell Bay Dr. Twr 4 #662

Miami, FL 33131

   2. Interested Persons and their representatives (if any)

6. Check one:

   ____ Documentation is attached.

   XX Documentation will be provided with the recommendation.

I:\PSC\RAR\WP\ESTDKT.
PSC/RAR 10 (Revised 01/96)

Name ABA

Address 801 BRICKEL BAY DR

TOWER 4 STE 662

City/Zip Miami 33131 County DADE

Account Number

Caller's Name MANUEL LORA

Company BELLSOUTH TELECOMMUNICATIONS, INC.

Attn. Sherry Coxe237627R

Consumer's Telephone # (305)-374-0838

Can Be Reached

Note ncs

Informal Conf. Outreach OTHER

Request No. 237627R

By NCS Time 11:53 AM Date 12/10/1998

To CO Time FAX Date 12/10/1998

Type S Form Phone

Category GI-09

Infraction

Closed by NCS Date 01/14/1999

Reply Received T

Customer states that he was offered several features with ISDN services offered through Bellsouth. He was informed that he would get better service with Bellsouth than with the analog service he had. Customer decided to sign up. Customer states that the service was not connected on time they were completely out of service for 2 days, afterward there was 2 weeks of poor service. Bellsouth had a representative investigate the matter which then informed the customer that he would not have several features that he normally had with his previous analog service. Customer states that he should not have to pay for the service,the installation and any other charges related to this matter because it has not been what the company committed to providing customer. Please investigate this matter contact the customer and provide me with a detailed written report.
Please do not interrupt any services analog or ISDN until this investigation is complete.

12/14/98 Customer was faxed a copy of this complaint form per the customer's request. eaa 305-374-0497. eaa.

12/14/99 Sent fax to Bellsouth of documents received from customer to assist in investigation.

12/23/98 Received a report stating that an adjustment of $1989.36 would be

CONSUMER REQUEST

FLORIDA PUBLIC SERVICE COMMISSION

2540 SHUMARD OAK BOULEVARD
TALLAHASSEE, FL. 32399-0850
850-413-6100

PLEASE RETURN THIS FORM WITH REPORT OF ACTION TO:

NANCY CORTIJO-SIMMONDS

DUE: 12/28/1998

issued for past installation charges and a $5489.11 adjustment for equipment that was returned. The services were delivered to the customer were not compatible to the analog features he had so the services were converted back and adjustments made. Report states that an agreement was made that the customer would be respobsible for the recurring monthly charges.

01/14/99 Closed case.

01/15/99 Spoke to customer about same problem he's having on his additional line. Please review the following correspendence regarding modem line 305-374-0497. Please investigate this matter and follow up by 02/12/99.

01/27/99 Sent information via fax to Bellsouth regarding case.

02/09/99 Received supplemental report stating that an additional adjustment for the last line would be made in the amount of $544.43.

02/22/99 Sent fax to customer of copy of report sent by Bellsouth stating that he would be responsible for monthly charges.

02/26/99 Received fax from customer stating that he is not satisfied. Faxing correspondence received today. Please review the matter and provide me with a supplemental report by 03/10/99.

03/05/99 Interim report received. A fax from Bellsouth is received re: letter sent to customer from Ms. Pinelas.

03/08/99 Received correspondence from customer.

03/12/99 Received memo to customer from Bellsouth.

03/24/99 Received report stating that the payments that were in dispute had posted on the account, and a letter had been sent to customer to inform him of this. Called customer to make him aware of the situation payment arrangements will need to be made on account to avoid disconnection of service.

03/25/99 Received correspondence from customer,dated March 8, 1999.

03/25/99 Faxed to customer the copy of initial response from Bellsouth stating that he would be responsible for monthly charges.

03/25/99 Received supplemental report from Bellsouth stating that another response would be sent on 03/30/99.

03/25/99 Received customer's request for an informal conference. However, due to the complexity of this case, I will call the customer and suggest that we forward it immediately to CMU for review.lar

03/26/99 4:58 pm Called customer and spoke with Mr. Lora, he is familiar with this issue and is the person that initiated this complaint. I explained that due to the complexity of this issue, the informal conference is probably not the most expeditious way to proceed. Rather, our technical division of Communications would be the best way to continue with this dispute. He agreed to have technical review this file but wanted a letter stating that he was not waiving his informal conference rights by sending a letter to withdraw the conference. I faxed a letter to this customer reiterating this information.

When I get his approval I will forward this file the CMU.lar
03/29 5:41 pm Called and spoke with Manuel Lora, he did get my letter via fax, and is getting ready to reply by dropping the present request for an informal conference and requesting that we forward his file to CMU. Customer understands that this move does not eliminate his right to a future informal conference if one is needed, 6:13 pm received customer's fax letter dropping the informal conference request. This file will be forward to the Division of CMU.lar
03/30 6 pm Called to talk with Mr. Lora, he will fax a breakdown of the matter of dispute to me Wednesday morning. I will await this fax before forwarding the file to CMU.lar
04/06/99 No fax was received. Moving forward with the referral to CMU.lar

7/21/99 Received letter from Mr. Lora which included my March 26. 1999 letter to him which promises that allowing CMU to review his concerns did not mean that he forfeited his right to an informal conference. This utility customer is still unsatisfied with the response letter he received from Sue Ollila (413-6540) in CMU. Calling Della Kimbrel (413-6512) in CMU, Della transferred to to David Dowds, Sue's supervisor, 3:24 pm left message for David to call me regarding this request. Calling Noreen in legal (413-6086), left voice mail requesting a call back on this case. Della sent a copy of the final letter by Sue Ollila to customer.lar

7/21/99 5:57 PM Called Mr. Lora (305)374-3131 to acknowledge receipt of the his information, he is very upset with the outcome of CMU's review. He is still requesting an informal conference.lar

July 28, 1999: Received instructions from Mr. Rasberry to process request for informal conference. Kate

07/30/99 Calling Mr. Lora, requesting that he fax his written request.lar
7/30/99 Fax received from Mr. Lora, proceeding with processing this request.lar

*Note: Mr. Rasberry's E-Mail to Kate Smith stated that Ann Marsh in CMU is reviewing the file and will be the technical contact for the customer. CAF will moderate the conference, if required. Ann will ask the customer for additonal documents. S. Stokes

10/11/99 Received E-Mail from Ann Marsh. She has completed her review of this customer's request and we will meet to discuss the next step in this procedure. Ann stated in her E-Mail that the customer has not paid his bills for more than a year, and the amounts he's complaining about have nothing to do with ISDN but are amounts he owes.lar

01-27-00 I received an e-mail from Ann Marsh, CMU, stating that she has been discussing the case with Leroy Rasberry and Carmen Pena. She has written a rec to deny and will provide me with a copy. Shirley Stokes

01-27-00 I received a copy of the draft rec and place a copy in the file. She will try to get it scheduled for the February 15, 2000 Agenda Conference. Shirley Stokes

BELLSOUTH

BellSouth Business Systems, Inc.
Suite 500
1850 West Exchange Place
Tucker, GA 30084

Data Customer Support Center

September 8, 1999

Dear Mr. Lora,

I apologize that an ISDN specialist was unable to call you back as previously stated, but the call volume the day after Labor Day was higher than we had anticipated.

Sincerely,

Pam Dixe

Pam Dixe
Customer Service Associate

B) THIS IS 1998 TECHNOLOGY IS FAR BEYOND THE PONY EXPRESS DAYS SMOKE SIGNALS ARE NO LONGER USE IN THE BUSINESS WORLD.

4:00 P.M. I GET CALL FROM A ELENA POWANDE WHOM PROVIDED ME HER DIRECT LINE 954-958-6222 SHE WAS CONTACTED BY DOLORES MASON THE ORDER WAS RECEIVED BY HER OFFICE AT 1:00 PM SHORTLY AFTER I HAD SPOKEN TO SARAH THE LAST TIME (PATTERN ESTABLISH). MS POWANDE EXPLAIN THIS WOULD TAKE AROUND 4 HR.. BUT SHE WAS GOING TO BE THERE TILL GOT DONE.

I EXPLAIN TO IGNACIO THAT IT APPEARS TO ME THAT I WOULD NOT HAVE SERVICE TILL LATE THAT NIGHT THAT MY CLIENTS MUST BE GOING CRAZY. IGNACIO DEPARTED AREA .

8:00 PM CONTACTED Ms POWANDE EXPLAIN TO HER THAT LINE 374-0497 WHICH WAS THE FAX WAS WORKING AND ERRONEOUSLY PLACED IN SYSTEM AGAIN I EXPLAIN THAT THIS IS THE FAX LINE THEY ALWAYS IGNORE IT IN ALL ORDERS NOW AT CRITICAL MOMENT THEY GIVE IT PRIORITY AND PLACED IT IN THE SYSTEM WITH OTHERS LINES. THE MAIN LINE IS 374-3131 SHE SAID THEY WILL WORK SHORTLY. BUT SHE HAD TO DEPART TO PICK HER CHILDREN UP. GAVE ME BEEPER 888-589-1424 . I POLITELY EXPLAIN I DID NOT WANTED TO DELAY HER PICK UP OF CHILDREN.

10:0:00 PM MS POWANDE CALLED ME FROM 965-6746 954 742-0373 SHE STATED ALL LINES WERE FUNCTIONING. I ASK AGAIN THAT A WRITTEN REPORT BE PROVIDED BY FAX FIRST THING MONDAY MORNING. SHE SAID SHE WOULD SEE TO IT. I INQUIRED ABOUT FEATURES SHE CLAIMS THEY ARE RE PROGRAMMED AS THEY WERE IN THE PAST. EXPLAIN THAT I AM GETTING FAXES ON CELLULAR PHONE.

FEATURES NOT FUNCTIONING CALLED 780-2222 MARY # 720 SHE SAID SHE WAS TO BUSY TO ASSIST ME. I ASK FOR SUPERVISORS NONE AROUND. SHE SAID SHE WOULD HAVE ONE CONTACT ME BY TOMORROW AT EARLIEST.

8/29 MORNING NONE OF THE FEATURES ARE FUNCTIONING THE FLEXIBLE REMOTE NOR CALL WAITING ARE FUNCTIONING. MS POWANDE NOTIFIED ME THEY HAD INSTALLED AGAIN AS NEW FEATURES I HAD TO SET THEM UP AGAIN AS NEWLY INSTALL. ALL OVER AGAIN. I DID.

I GOT CALL FROM 800-338-0428 KEN XT 727 # AT ISDN HE CLAIMS THE OLD TICKET WAS CANCELED BECAUSE THERE WAS A NEW SERVICE ORDER BY VENDOR DOLORES MASON. KEN THEN ISSUED A NEW TICKET NUMBER #24441919

A FELLOW FROM BELL SOUTH NAME MIKE JIMENEZ #582 SHOWED UP AT OFFICE TO INSTALL NEW LINES 374-3131, 374-3162 ORDER ISSUE BY VENDOR DOLORES MASON.

I THEN CALLED 780-2222 #5 MARY OPERATOR #720 SHE SAID SHE WOULD HAVE SUPERVISOR CONTACT ME

8/30 7:30 780-2222 N/A AGAIN FEATURE FLEXIBLE REMOTE IS NOT FUNCTIONING AND APPARENTLY FAX LINE 374--0497 HAS BEEN SEP UP WITH MAIL BOX .

I CAN NOT DEPART OFFICE FLEXIBLE REMOTE IS NOT FUNCTIONING IN ANY OF THE LINES. CONTINUE TO GET FAXES ON CELLULAR PHONE.

7:50 A.M. CALLED 780-2222 ENTRY SYSTEM REQUESTING SPANISH OPERATOR A FEMALE ANSWERED SHE CLAIMS HER NAME IS SUZETTE NO LAST NAME,. EMPLOYEE IDENTIFICATION NUMBER NOR ANYTHING ELSE. SHE CLAIMS THE ONLY IDENTIFICATION NUMBER SHE HAS WITH BELL SOUTH IS HER SOCIAL SECURITY. I PERSISTED BUT TIME AFTER TIME SHE REFUSED. SHE THEN SAID HER LAST NAME INITIALS IS R AND SHE IS IN FORT LAUDERDALE. THAT IF IT THAT WAS NOT SUFFICIENT IT WAS TOO BAD. SHE DID NOT WANTED TO BE BOTHER I ASKED HER FOR SUPERVISOR SHE SAID THEY DO NOT HAVE ANY.

CALLED AGAIN SAME FEMALE ANSWER TELEPHONE I ASKED TO SPEAK TO SUPERVISOR SHE LAUGHED GAVE ME OPERATOR NUMBER #12 AND HANGED UP. I THEN CALLED Ms ELENA POWANDE AT 888-589-1424 , 3 TIMES 7:30 AM 8:40 AM AND 9:15 AM CONTINUE TO GET FAXES ON CELLULAR PHONE. I GET CALLED FROM SOME FELLOW WHO DOES NOT IDENTIFIED HIMSELF OTHER THAN HE IS FROM BELL SOUTH.

8:30 CALLED 780-2222 ENTER # 5 FOR SPANISH SPEAKING PERSONNEL , KIM #606 ANSWERED CLAIMS THEY HAVE NO SPANISH SPEAKING EMPLOYEES AT THIS TIME, SHE SAID SHE WILL HAVE SUPERVISOR CALL ME, WILL CALL BUSINESS OFFICE TO RE ORDER FLEXIBLE REMOTE , WILL ISSUE IMMEDIATE ORDER FOR LINES TO BE FORWARD TO CELLULAR 954-592-2838. I REQUESTED A COURTESY CALL SHE SAID EVERY THING WILL BE DONE WITHIN ONE HOUR

9:40 AM. DIALED 780-2222 ENTER #5 KIM AGAIN NO SPANISH SPEAKING ASSISTANT. SHE CLAIMS THEIR COMPUTER SYSTEM IS DOWN AND LINES CAN NOT BE FORWARD TILL THEIR SYSTEM IS UP. I EXPLAINED NO COURTESY CALL WAS AFFORDED TO ME.

11:40 AM CALLED 780-2222 #5 KIM AGAIN NO ON THERE SPEAKS SPANISH CLAIMS THEY WILL CORRECT EVERY THING BY 12:45 AGAIN NO COURTESY CALL NO SUPERVISOR WITH STAFF.

AT SOME POINT DURING THIS ORDEAL MS ELENA LEFT MESSAGE AT ABA PROFESSIONAL ASSOCIATION LEFT NO NUMBER WHERE TO REACH HER.

1:15 P.M. CALLED 780-2222 #5 CRYSTAL CLAIMS NO ONE THERE SPEAKS SPANISH HER RECORDS INDICATE THAT I CALLED AT 11:00 AM. NO SUPERVISOR THERE WILL HAVE ONE CALL ME.

IN BETWEEN CALLS MS ELENA POWANDE RETURN ONE OF MY CALLS, CLAIMS SHE LEFT MESSAGE WITH MAIL BOX. I EXPLAIN THAT THE FLEXIBLE REMOTE IS NOT WORKING

3:00 P.M. CALLED 780-2222 #5 TIFFANY # 2923 CLAIMS NO SPANISH SPEAKING PERSON, NO SUPERVISOR ON CALL. THEY ARE USUALLY NOT AROUND. WILL RELAY MESSAGE.

4:00 P.M. CALLED 780-2222 #5 ANDREW CLAIMS THEY DO HAVE SOMEONE THAT SPEAKS SPANISH WENT TO LOOK FOR THEM. I GOT DISCONNECTED. THIS HAPPENED 7-8 TIMES IN A ROW. IT IS MY OPINION THAT THE FEMALE THAT WAS ANSWERING PURPOSELY AND INTENTIONALLY HANGED UP KNOWING WHOM THE CALLER WAS.

5:00 P.M. CALLED 780-2222 #5 CRYSTAL STATED THAT ANDREW WAS WRONG THERE IS NO SUPERVISION ON WEEKENDS NOR HOLIDAYS. SHE SAID SYSTEMS SHOWS ONE CALL ONLY.

6:00 CALLED 780-222 #5 ANDREW AGAIN CLAIMS THAT THEIR RECORDS INDICATE THAT OUR OFFICE WAS CONTACTED, WHILE DOING SO AN EMPLOYEE BY THE NAME OF HOWARD REPORTED THAT ALL MATTERS WERE RESOLVED. THIS ACTION ALLOWED THEM TO CLOSE REPAIRS ORDERS. ANDREW STATED THAT THEY ARE HAPPY TO WORK WITHOUT SUPERVISION. WILL HAVE ONE CALL ME. BUT NOT TO EXPECT CALL TODAY.

7:00 PM 888-589-1424 MS POWANDER RATHER THAN APOLOGIZING FOR THE INCOMPETENCE OF THE STAFF FOR HAVING US OUT OF SERVICE FOR SUCH AN EXTENDED PERIOD OF TIME. OPTED TO BECOME INQUISITIVE AND INQUIRED AS TO WHY SHE WAS ABLE TO REACH ME AT THE CELLULAR WHEN DIALING 374-3131 IF I HAD STATED TO HER THAT THE FLEXIBLE REMOTE WAS NOT WORKING. UNDOUBTEDLY SHE WAS DEFENDING HER MINDLESS ASSOCIATES.

WITHOUT HESITATION I IMMEDIATELY RESPONDED THAT AFTER MONUMENTAL NUMBERS OF COMPLAIN CALLS, SOMEONE HAD OPTED TO DO THEIR JOB AND TRANSFER LINES TO CELLULAR NUMBER PROVIDED BY ME ON NUMEROUS OCCASIONS 954-592-2838 NONE LESS I RESPECTFULLY REQUESTED FROM MS POWANDE THAT I BE PROVIDED BY MONDAY VIA FAX THE NAME OF THE REGIONAL DIRECTOR RESPONSIBLE FOR THE OPERATIONS OF THE SERVICE PROVIDED BY HER DEPARTMENT AS WELL AS THAT OF 780-2222 WHETHER IS SAME OR NOT. I SUGGESTED THAT I WAS CERTAIN THAT THE PUBLIC SERVICE COMMISSION WOULD ASSIST US IN WITH THE NUMBER OF BELL SOUTH REGIONAL DIRECTOR OF OPERATIONS FOR CUSTOMER SERVICE & REPAIR.

8/31 7:58 AM CONTACTED SARA RUIZ AT 800-782-7258 LAMAR HE PRONOUNCED IT LEMONT SAID SHE WAS BUSY L/M WITH MAIL VOICE. LATER 9:00 AM I CALLED A FEMALE ANSWER BY THE NAME OF MARTHA SAID SARA WAS NOT IN. SHE THEN CHANGED THAT TO SAY THAT SHE MIGHT BE IN A MEETING. I ASKED HER TO SPELL HER NAME SHE SPELLED M-A-R-I-S-A LAST NAME O-R-W-I-N. HER SUPERVISOR IS TOWANDA HARRISON.

8/31 9:50 AM BEEP IGNACIO 353-2485 CELL 305-785-8839 L/M

10:30 FEDERAL EXPRESS ARRIVED CHECKED OUT BOXES APPARENTLY THESE ARE THE PARTS THAT TECHNICIAN IGNACIO HAD REQUESTED.

10: 40 A.M. RECEIVED CONFERENCE CALL FROM Ms; CONNIE PAGE (SARA RUIZ SUP.) AND Mr. ; BOB WATSON AGENCY PROGRAM SENIOR ACCOUNT EXECUTIVE. THEY ASSURED ME WE WILL HAVE AN IMMEDIATE ORDER TO TRANSLATE 305-374-0838 FROM ANALOG TO ISDN ONCE WE SUCCESSFULLY COMPLETE THIS WE WILL DO OTHERS IN A SYSTEMATIC CHRONOLOGICAL SEQUENCE. WE WILL DO SO AS FOLLOW 374-3162 THEN 374-6404 THEN 374-3162 THEN LAST OUR DEDICATED FAX LINE WHICH IS NOT INTEGRATED WITH SYSTEM 305-374-0497. (LATER DISCOVERED THEY DID AND PLACED ADAPTER)

IGNACIO ARRIVED WITHIN A FEW MINUTES HE RESOLVED THE PROBLEM WITH THE FAX AND OTHER RELATED TO ALLOCATION OF LINES. HE IS NOW WORKING IN THE TESTING OF THE NEW EQUIPMENT WHICH ARRIVED TODAY FOR THE ISDN.

WHILE THIS IS TAKEN PLACE WE AWAIT FOR THE NEW INTERACTIONS FROM BOB WATSON TO ELENA POWANDE ON LINE 305-374-0838.

SYNOPSIS : UNEQUIVOCALLY THE RECORDS AS WELL AS DOCUMENTED INFORMATION INCLUDING RECORDS OF VERBAL INFORMATION, CONVINCINGLY INDICATES THAT Ms DOLORES MASON HAS ON SEVERAL OCCASIONS ISSUED SEVERAL ORDERS WHICH ULTIMATELY CREATED A CONFUSION WITHIN BELL SOUTH ITSELF. SHE FAILED TO PROPERLY COMMUNICATE WITH US EVEN THOUGH WE HAD REQUESTED AT ALL TIMES TO BE AFFORDED INSTALLATION DATES AS WELL AS ANY OTHER RELEVANT INFORMATION CONCERNING THIS FIRM. HER INABILITY TO BE ORGANIZE AND METICULOUS WHILE HANDLING SUCH SENSITIVE TYPE OF WORK OR JOBS CREATES A SERIOUS COMPLICATION FOR ALL BUSINESS CUSTOMERS OF ANY COMPANY MUCH SO BELL SOUTH. THE COMPANY ACTIONS ARE EXTREMELY IRRESPONSIBLE WHEN THEY CHOOSE TO HAVE SUCH A SIGNIFICANT NUMBER OF EMPLOYEES WITHOUT ANY TYPE OF SUPERVISION, LITTLE OR NO TRAINING IN CUSTOMER CARE.

THESE TWO COMBINED ARE A CLEAR PATH FOR DESTRUCTION OF ANY BUSINESS. THIS IS PRECISELY WHAT TOOK PLACE ON WHEN THE SWITCH WAS MADE FROM ANALOG TO ISDN. A CATASTROPHE WHICH I WOULD NOT WISH ON ANYONE INCLUDING BELL SOUTH. EVEN THOUGH I AM IN THE OPINION THAT THEY SHOULD BE GIVEN TASTE OF THEIR OWN MEDICINE TO ALLOW THEM TO HAVE A BETTER UNDERSTANDING OF WHAT IT IS LIKE BEING ON THE OTHER SIDE.

THE INCOMPETENCE OF THESE EMPLOYEES WORKING WITHOUT PHYSICAL SUPERVISION BY SENIOR MANAGEMENT PLACES EVERY COMPANY A SERIOUS PREDICAMENT. WE ARE PLACED AT THE MERCY OF THESES UNSCRUPULOUS

INDIVIDUALS. EVERY COMPANY HAS SUPERVISORS PRECISELY TO AVOID THIS CONFLICTS WHILE DEALING WITH GROSS NEGLIGENT EMPLOYEES WHOM CARELESS. EVEN AT THE HIGHEST LEVEL YOU HAVE SUPERVISION WITH A SYSTEMATIC CHAIN OF COMMAND. THE RATIONALITY IS NOT HERE. THIS IS MIND ASTONISHING.

I AM ASTONISHED, BAFFLED. DUMBFOUNDED WHEN I REVIEW THE PERFORMANCE OR NON SERVICE PROVIDED BY THESE INDIVIDUALS WHOM ARE MENTALLY INCAPACITATED, FROM PERFORMING SIMPLE DUTIES. THEY ARE RUTHLESS, ARROGANT, UNORTHODOX , ABNORMAL COCKY LACKING ANY SENSE OF PROFESSIONALISM. NO NORMAL HUMAN BEING COULD HAVE SUCH A POOR BEHAVIOR NOR DISPOSITION.

THE ANNOUNCEMENT THAT BELL SOUTH PLAYS IN IT'S RECORDING TELLING CUSTOMERS TO PRESS #5 WHEN DIALING 780-2222 TO COMMUNICATE WITH SPANISH SPEAKING PERSONNEL IS DECEIVING AND SHOULD BE CHANGE PROPERLY TO CORRECTLY INFORM CUSTOMERS THAT THEY ONLY HAVE SPANISH SPEAKING STAFF ON A CONDITIONAL LIMITED BASIS.

WE UNDERSTAND THAT AS HUMANS WE ARE BOUND TO MAKE MISTAKES FOR THIS REASON THE ERRORS MADE BY THOSE WHO TRIED THEIR BEST IS IGNORED AND ACCEPTED AS UNINTENTIONAL MISTAKE. BUT WE CAN NOT TOLERATE THE ACTIONS BY THOSE WHOM HAVE NO SENSE OF RESPONSIBILITY. HENCE WE RESPECTFULLY REQUEST THAT MS DOLORES MASON BE PROHIBITED FROM ANY PARTICIPATION, ASSOCIATION OR CONNECTION IN ANY WORK ASSOCIATED OR RELATED WITH OUR FIRM ABA PROFESSIONAL ASSOCIATION.

WE HAVE MADE OUR CONCLUSIVE DECISION IF THAT BELL SOUTH CAN NOT COMPLY WITH OUR REQUEST, WE ARE COMPEL TO CANCEL THIS ORDER IMMEDIATELY IN IT'S ENTIRETY.

WE LIKE TO COMMEND IGNACIO FOR HIS DEDICATION TO CUSTOMER SATISFACTION. WE FIND HIM TO BE AN ASSET TO BELL SOUTH. WE SINCERELY REGRET THAT IGNACIO AND SARA ARE NOT PART OF MANAGEMENT SINCE IS OBVIOUS THAT THEY HAVE THE ABILITY TO RELATE TO THE CONSUMER AT TIMES SUCH AS THIS SPECIFICALLY WHEN THE CONSUMER / CUSTOMER IS RIGHT AND WRONGFULLY BE PUNISH DUE TO THE GROSS NEGLIGENCE OF SUCH INCOMPETENCE INCAPACITATED INDIVIDUALS.

THERE IS NO EASY NOR SIMPLE WAY TO MEASURE OR GAUGE THE DAMAGES INCURRED BY OUR FIRM OR HOW MUCH WE HAVE BEEN PREJUDICE BY THESE MULTIPLE ACTIONS AND CONDUCT OF SEVERAL UNSUPERVISED GROSS NEGLIGENT INDIVIDUALS. IT IS IMPERATIVE THAT BELL SOUTH PROVIDES A LETTER OF APOLOGY TO AFFORD US THE OPPORTUNITY OF SHOWING IT TO OUR CLIENTS. TO SHOW THEM THAT WE APPRECIATE THEM AND CARE FOR THEM. THAT THE ABSENCE OF COMMUNICATION WAS NOT CAUSED BY US BUT RATHER BELL SOUTH.

WE FEEL VERY STRONGLY THAT WE NEED THIS TYPE OF LETTER TO SHOW THOSE WHOM WE ARE ASSOCIATED WITH US IN ANY WAY SHAPE OR FORM. THIS WAS NOT SOMETHING WE DESIGN, OR CREATED TO AVOID COMMUNICATIONS. ULTIMATELY WE WANT TO SHOW THOSE ASSOCIATED WITH US THAT WE HAD NO PARTICIPATION IN THESE ACTIONS.

IF BELL SOUTH IGNORES THE ACTIONS OF THESE INDIVIDUALS THEY ARE SENDING A WRONG MESSAGE TO EVERY ONE. WE THE CONSUMERS ARE AND WILL CONTINUE TO GET PUNISH FOR BEING LOYAL TO A COMPANY THAT COMPENSATES AND REWARDS THOSE WORKERS THAT HAS NO SENSE OF RESPONSIBILITY. THESE ARE THE SAME EMPLOYEES THAT WILL DESTROY PROPERTY AS WELL AS THE CONFIDENCE THAT THE COMPANY SEEKS OUT IN ITS CUSTOMERS . UNEQUIVOCALLY THE MESSAGES ARE CONFLICTING YOU CAN NOT REWARD THESE CONDUCT AND IGNORING IT IS SAYING IS OK KEEP DOING IT. WE THE PAYING CUSTOMERS DISAGREE.

ABA TRAVEL GROUP INC.

801 Brickell BAY DRIVE #662
Miami, Florida 33131. USA

Phones 1-800-222-4373 USA & Canada
1-800-344-8211 From The Caribbean
800-122-06 From Venezuela
0130-814747 From Germany
046-059416 From Switzerland

FAX 1-800-442-0497 From USA, Canada, & Caribbean ELSEWHERE 305-374-0497

LOCAL NUMBERS 305-374-0838,

E-MAIL ABAHERE@WORLDNET.ATT.NET

NOVEMBER 01, 1998

BELL SOUTH SYSTEM
C/O MS, ELENA POWENDE
PROJECT MANAGER 11

FAX 1-800-782-7258
VOICE 1-954-6262

REF : RPRT # 13 9/16/98 SPECIAL SERVICE ARRAGEMENT REQUEST FORM
DOC#SF98-5156-00

DEAR MS POWENDE , PURSUANT YOUR LETTER ON THE ABOVE DATE, I RESPECTFULLY REQUEST THAT YOU CONTACT ME FOR AN UPDATE ON THE AGREEMENT OR CONTRACT.

THE SPECIAL ARRANGEMENT REQUEST FORMS ACCORDING TO YOUR LETTER WAS TO TAKE TWO WEEKS. WE ARE PRESENTLY INTO A TIME FRAME OF SIX WEEKS THIS HAS BEEN EXTENDED NOW. THIS ISSUE IS SIGNIFICANT TO US. AND WE WOULD APPRECIATE YOUR ASSISTANCE.

THANK YOU IN ADVANCE FOR YOUR PROMPT COOPERATION.

MS POWANDA CLAIMS BELL SOUTH RESPONDED THEY CAN NOT PROVIDE PACKAGE AT THIS TIME. MAYBE THEY CAN PROVIDE

SINCERELY,

MANUEL LORA

ABA PROFESSIONAL ASSOCIATION INC.

1101 Brickell Ave. 310460
Miami, Florida 33131.USA

Phone 1-800-222-4373 USA & Canada
1-800-344-8211 From The Caribbean
800-22-06 From Venezuela
0130-814747 From Germany
046-059416 From Switzerland

Fax 1-800-442-0497 From USA, Canada, & Caribbean ELSEWHERE 305-374-0497

LOCAL NUMBERS 305-- 374-3131, 374-3162, 374-6404 374-0838,

E-MAIL abahere@worldnet.att.net.

AUGUST 18, 1998

SARA, RUIZ
1-800-782-7258
FAX 770-708-5598

Subject : CHANGING THE SYSTEM BACK TO ANALOG.

THE ORIGINAL DATE OF INSTALLATION WAS NOT MET THE SECOND TIME WAS NOT MET EITHER UNEQUIVOCALLY THE CHANGES WERE TO TAKE PLACE ON THE TIMES DESIGNATED WHERE NEVER ABLE TO DO SO DUE TO BELL SOUTH NEGLIGENCE..

8/10 COMMITMENT DATE SET BY DOLORES MASON IS MISSED. SARAH RUIZ CONFIRMED THE INFORMATION 8/10 INSPECTION AND EVALUATION OF JOB SITE. NEGLECTED

8/12/1998 ISDN TECHNICIAN IGNACIO RAMIREZ WAS VERY APOLOGETIC HE ACKNOWLEDGES THAT THE JOB WAS GIVEN A TARGET DATE (COMMITMENT DATE) MR. RAMIREZ KNOWING THAT HE HAD PRIOR COMMITMENT PROPERLY ADVISED HIS SUPERVISOR THAT HE WAS UNABLE TO ATTEND TO THE INSTALLATION TO DISPATCH ACCORDINGLY ANOTHER TECHNICIAN.

BASED ON HIS EXPERIENCE MR. RAMIREZ CLAIMS THERE IS NO NEED FOR ADDITIONAL INSTALLATION NOR PULLING OF WIRES BECAUSE OUR PRESENT WIRING AND INSTALLATION EQUIPMENT IS PROPER TO BE REPLACED BY THE NEWLY PURCHASED BELL SOUTH EQUIPMENT FROM NORSTAR. WE SHOULD BE CHARGED NOTHING FOR INSTALLATION.

HE SUGGESTED THAT HE WOULD RETURN WHEN THE DIGITAL LINES ARE FUNCTIONING.

8/14 BELL SOUTH NORMA ARRIVED TODAY, SHE HAS AN ORDER FOR THREE (3) NEW DIGITAL LINES BY DOLORES MASON. UNEXPLAINABLY THE ANALOGS ARE NOT BEING TERMINATED. MEANING BY MS MASON REQUEST WE WILL HAVE 3 DIGITAL 3 ANALOGS. NO LOGICAL EXPLANATION AS TO THIS ACTION FROM DOLORES MASON .

8/14 IMMEDIATELY I CONTACTED SARAH RUIZ , TEN MINUTES LATER TWO INSTALLERS (2) RICK & DORADO SHOW UP. THEIR PAPER WORK FOR THE ONE LINE WAS REQUESTED BY VENDOR DOLORES MASON THIS TIME A CONFERENCE CALLED WAS SET UP BETWEEN SARAH RUIZ AND DORADO. SHORTLY AFTER THAT I COMPLAINED TO SARAH ABOUT THE CONSISTENCY OF ERRORS AND THEIR INABILITY TO COMPLY WITH COMMITMENT DATES.

I EXPLAINED TO SARAH THAT WE SHOULD NOT BE CHARGED FOR SERVICE DUE TO THE NUMEROUS INCONVENIENCES. WE SHOULD GET A YEARS OF FREE SERVICE.

SARAH THEN TRANSFER TO MS MASON WHOM WAS TO OBTAIN A NEW DATE AND PROVIDE US WITH THE INFORMATION TO ASSURE ALL PARTIES THAT THE NEW DAY WAS APPROPRIATE. I EMPHATICALLY REQUESTED FROM MS MASON THAT THE DISCONNECTION OF THE SERVICE BE DONE I A CHRONOLOGICAL SEQUENCE TO AVOID TOTAL INTERRUPTION OF SERVICE. DOLORES MASON CHOSE TO NOT CALLED BACK WITH THE PERTINENT AND RELEVANT INFORMATION.

8/20 TECHNICIAN IGNACIO APPEARED TIMELY FOR THE NEWLY SELECTED INSTALLATION BY DOLORES MASON WHOM AGAIN NEGLECTED TO INFORM THE CONSUMER/CUSTOMER OF THIS SIGNIFICANT INFORMATION. SARAH HAD AFFORDED HIM WITH HIS INFORMATION WHICH SHE HAD RECEIVED FROM DOLORES MASON. BECAUSE WE HAD NOT BEEN NOTIFIED ACCORDINGLY WE COULD NOT PROCEED WITH THE INSTALLATION.

IMMEDIATELY AFTER IGNACIO RECEIVED A FAX FROM SARAH WITH A NEW DAY OF 8/21 NEXT DAY I VIGOROUSLY OPPOSED TO THIS. HENCE, I POLITELY REQUESTED FROM SARAH THAT IT WOULD BE SET FOR NEXT THURSDAY 7 DAYS FROM THIS DATE.

I AM INFORMED THAT THEY WILL ALSO ABIDE BY MY REQUEST TO INSTALL ONE LINE AT A TIME TO AVOID TOTAL INTERRUPTION OF THE SYSTEM. THIS MEANS THAT BECAUSE ONE DIGITAL CARRIES TWO NUMBERS, I.E..... 374-0838 IS DISCONNECTED THEN THEY WOULD BRING 374-3131 AND 374-3162 IN THAT LINE OR IF NOT POSSIBLE THEN LINES 374-0838 AND 374-6404 ONCE IF SUCCESSFUL CONTINUE SAME PROCESS WITH OTHERS. WE ALL AGREED THAT THIS IS PROPER.

I CONTINUE TO CONVERSE WITH MS RUIZ ABOUT THE IRRATIONALITY OF THESE ACTIONS BY MS DOLORES MASON. SARAH CLAIMS SHE HAS NO SAY IN THE MATTE IT IS A TOTAL SEPARATE DEPARTMENT THAN HERS.

HOWEVER WE DID TALK ABOUT THE SYSTEM 6 ADAPTER. I EXPLAINED TO SARAH AN EARLIER QUESTION I HAD POSED TO ISDN TECHNICIAN IGNACIO. WHEREAS WE WANTED TO HAVE THESE 6 TO BE USED AT MAIN FRAME LEVEL ENABLING WHOM EVER LOGS IN FIRST TO THE COMPUTER TO HAVE USE OF IT. UNDERSTANDING THAT THERE IS ONLY SIX (6) SARAH THEN SUGGESTED THAT WE USE 2-3 AT THE SERVICE REMINDING US OF THE LIMITATIONS OF LINES TO OUR OFFICE. THIS INFORMATION FROM Ms RUIZ WAS WELCOME WE OPTED TO GO ALONG WIT IT ..

SARAH LATER ON THE 8/21 CONVEY TO ME THAT HER DEPARTMENT HAD ENTERED INTO A ROUND TABLE DISCUSSION OVER THE PROPOSED IDEA OF HAVING THE 6 TCI ADAPTERS NOT TO BE DEDICATED OR DESIGNATED TO 6 SELECTED COMPUTERS. WHILE WE WERE CONVERSING I LOST COMMUNICATION WITH HER SINCE I WAS USING THE CELLULAR.

8/24 CALLED SARAH LEFT MESSAGE APOLOGIZING. 8/25 CALLED SARAH LEFT MESSAGE.

8/27 AGAIN LEFT MESSAGE FOR SARAH LATER I SPOKE TO HER.

8/27 4:50 PM :A BLONDE LADY FROM BELL SOUTH SHE STATED SHE HAD ORDER FROM VENDOR DOLORES MASON TO INSTALL THE NEW ISDN LINES, I SUGGESTED WE WAITED FOR TECHNICIAN IGNACIO WHOM WAS FAMILIAR WITH THE DETAILS OF THE JOB. FEW MINUTES LATER IGNACIO APPEARED.

I AM REVIEWING THE ORDER WITH LADY THE FAX LINE 374-0497 IS NOT WITHIN REPORT IT WAS IGNORED, OMITTED OR NEGLECTED. CALL IS MADE TO ATLANTA Ms DOLORES MASON THEY RE ARRANGE TO HAVE ONE OTHER LINE AS FAX, SHE EXPLAINS IT TO IGNACIO WHOM ACKNOWLEDGES. THEY WOULD THEN CHANGE IT AGAIN ON FRIDAY 8/29.

CONTACTED SARAH EXPLAINED SITUATION TOLD HER SERVICE MUST BE TURNED ON BACK TO ANALOG IMMEDIATELY. IGNACIO SPOKE TO SARAH HE EXPLAINS SAME THING. HE CONTACTS OTHERS MAKES SAME REQUEST.

I POLITELY SUGGESTED TO THE LADY JEAN THAT WE DO AS I HAD SUGGESTED AND BELL SOUTH HAD AGREED TO. SHE VEHEMENTLY OPPOSED AND SAID SHE WAS UNDER DIRECTIONS NOT TO DO SO. AGAIN I ASKED SHE REFUSED TO CONSENT STATING THE OFFICE HAD NOTIFIED HER ACCORDINGLY THAT THEY WOULD DISCONNECT ALL AT THE SAME TIMES.

6:00 P.M. SHE DISCONNECTS CLAIMS THAT IT SHOWS OK ON HER EQUIPMENT AND DEPARTS AREA KNOWINGLY WE HAD NO SERVICE. SHE WAS ABLE TO FIND OUT THAT THE CENTRAL OFFICE HAD SWITCH CERTAIN NUMBERS ON HER MAKING IT IMPOSSIBLE TO PROPERLY MAKE THE TRANSLATION ACCORDINGLY. THIS CREATES CONFLICT SITUATION BECOMES DIFFICULT.

7:00 P.M. CONTACTED REPAIRS DESIREE #0613 SHE REFUSES TO GIVE HER LAST NAME. SHE WAS RUDE AND ARROGANT NOT CONCERN AT ALL WITH ISSUES AT HAND. SHE SAID SHE WOULD ASKED A SUPERVISOR CONTACT ME.

8:00 P.M. CALLED 1-800-247-2020 SPOKE TO MR. RICHIE PANGBURN IN LOUISVILLE KENTUCKY EXPLICITLY EXPLAINED THE SITUATION WITH NO SERVICE HAVING TO STAY HERE TILL IS RESOLVE, MY 7 YEAR OLD DIABETIC SON. STATED THAT A TESTER WOULD DECIDE IF THEY WOULD REMOTE LINES TO CELLULAR OR NOT. HE PROVIDED ME WITH A TICKET ORDER HB241709 HE SAID I SHOULD KEEP THIS NUMBER.

EXPLAIN TO IGNACIO I WANT MY ANALOGS SYSTEM BACK ON TILL THE FIGURE OUT WHAT, WHEN, WHERE, WHEN, WHY, HOW OR WHICH PROBLEM THEY HAVE

I CALLED 800-338-0428 SPOKE TO MELISSA NICHOLS WHOM SAID SHE WOULD TRANSFER ALL LINES IMMEDIATELY TO CELLULAR NUMBER 954-592-2838. SHE WAS POLITE AND EXERCISE DUE DILIGENCE. SOME HOW THE FAX LINES ARE BEING FORWARD TO CELLULAR NUMBER 374-0497.

11:00 P.M. SHE CALLED TO TEST LINE CELLULAR BATTERY WAS DEAD. SHE LEFT MESSAGE THAT TRANSLATION OF DIGITAL LINES WERE COMPLETED AT 11: 00 PM SHE THEN TESTED ALL LINES LEFT MESSAGE IN EACH LINE.

8/28 IGNACIO WAS TO BE HERE EARLY. STILL NO SERVICE. CONTINUE TO GET FAXES ON CELLULAR LINE. I HAD TO CANCEL CUSTOMER RESPETO APPOINTMENT.

8/28 8:13 AM CONTACTED SARA EXPLICITLY EXPLAINED OUR DESIRE TO BE SWITCH TO ANALOG IMMEDIATELY. SHE SAID SHE HAD BEEN NOTIFIED BY IGNACIO. THEY FELT THE NEW EQUIPMENT WAS DEFECTIVE. SARA PLACED ME ON HOLD WHILE SHE IMMEDIATELY COMMUNICATED WITH DOLORES TO RE CONNECT ANALOG IMMEDIATELY.

AROUND 09:00 IGNACIO ARRIVED HE GAVE ME BRIEFING AS TO WHY HE THINKS SYSTEM IS DEFECTIVE. I EXPLAIN MESSAGE LEFT BY MELISSA EXPLAINING THAT TRANSLATION TOOK PLACE AROUND 11 PM. CONTINUE TO GET FAXES ON CELLULAR PHONE.

12:00 PM CONTACTED SARA DEMANDED THAT A SUPERVISOR CONTACT ME. SARAH POLITELY EXPLAIN THAT IF SYSTEM IS SWITCH BACK TO ANALOG WILL TAKE ANOTHER 10 DAYS TO HAVE ORDER FOR ISDN CONNECTION. I TOLD SARAH THAT THIS SEEM TO BE COERCION OR SIMILAR ACTION BY DOLORES MASON TO PLEASE CONVEY TO HER THE FOLLOWING MESSAGE.

A) I HAVE AN ACQUAINTANCE \ FRIEND THAT HAD SIMILAR PROBLEM DADELAND/COLONIAL BANK IT TOOK THEM 2 HOURS TO BE BACK THEIR DIGITAL EQUIPMENT & SERVICE WAS INSTALL 1 DAY LATER, BANK MISSED ONLY FEW HOURS OF SERVICE.

WHAT BELL SOUTH FAILS TO REALIZE THAT THIS HINDERS OUR ABILITY TO FUNCTION NORMALLY TO THE STANDARD WE HAVE PROVIDED TO OUR CLIENTS, CUSTOMERS, PROVIDERS, VENDORS, WHOLESALERS, ASSOCIATES, FRIENDS, ETC, WHEN THESE COMPANIES REPRESENTATIVES ATTEMPT TO COMMUNICATE WITH US AND IF AND WHEN THEY UNEQUIVOCALLY THEY WOULD SEE A DRASTIC CHANGE IN OUR WAY OF OPERATING. I FIND IT IMPOSSIBLE TO MAINTAIN THEIR FAITH AND LOYALTY. IT WILL BE ASKING THEM TO WAIT TILL WHEN??????. AS PREVIOUSLY STATED AND THE RECORDS CONVINCINGLY DEMONSTRATE WE ARE IN THE 3RD MONTH BY IN TODAY STANDARD WITH THE TECHNOLOGY AVAILABLE, AND BEING HANDLE BY THE LARGEST LOCAL SERVICE TELEPHONE COMPANY IN THE FREE WORLD WE HAVE A SERIOUS PROBLEM WHICH ULTIMATELY WILL CAUSE DEVASTATING LOSSES TO ANY COMPANY.

THE VERBAL APOLOGIES ARE WELCOME BUT THE REALISTIC WAY WOULD BE TO PROVIDE DIRECT LETTERS TO THOSE WHOM ARE DISCONTENT WITH OUR SERVICES IN WAYS WHICH WE NORMALLY HANDLE OUR BUSINESS DEALINGS.

WE ARE BEING PUNISH FOR BEING FAITHFULL WHILE MAINTAINING OUR LOYALTY FOR OVER 15 YEARS TO BELL SOUTH,. WE PURCHASED THE SUN MOON SYSTEM STR#30 IN 1987-88 AT WHICH TIME WERE PROMISED THAT IT WAS THE BEST THING IN THE WORLD. WITHIN 2 YEARS THE SUN MOON COMPANY WAS OUT OF BUSINESS (FOLDED, BELLYUP) WE WERE LEFT WITH AN INEPT EQUIPMENT WHICH OFTEN BROKE DOWN STILL WE WERE BILLED AND ASK TO PAY FOR REPAIRS BY BELL SOUTH EVEN THOUGH IT WAS UNDER THE WARRANTY.

5 YEARS LATER AGAIN BELL SOUTH SALES REPRESENTATIVE LURES US INTO A SYSTEM WHICH THEY KNEW WE WERE LOOKING TO BUY FROM AT & T (LUCIENT TECHNOLOGY) MS RUIZ WAS PLEASANT, POLITE, AND CONVINCINGLY UNDOUBTEDLY A PROFESSIONALS SALES PERSON. THE REST IS A MOOT ISSUE. SHE NOW ABANDONS US IGNORES OUR CALLS AND OUR PLEAS FOR HELP GO UNANSWERED.

THE MATHEMATICAL EQUATION AS SHE PUTS IT IS SIMPLE THE SALE DOES NOT BRING ENOUGH COMMISSION TO COMPENSATE FOR THE COMPLICATIONS CREATED TO US BY THEIR INABILITY TO ADEQUATELY DETERMINE WHICH WAS PROPER AT THAT PRESENT TIME. SALES PERSON KNEW OR SHOULD HAVE KNOWN THAT THIS EQUIPMENT, SERVICES, SUPPORT WAS NOT READILY ACCEPTABLE TO THE NORMAL STANDARD OF OUR OR ANY OTHER COMPANIES DAILY FUNCTIONS. OUR FIRMS SEES ITSELF AS A CHILD WHOM IS BEING PUNISH FOR SOMETHING HE OR SHE HAS NO KNOWLEDGE OF. THIS IS DIFFICULT TO UNDERSTAND AND ACCEPT.

10/23/98 MS PAGE AFTER CONFEENCE WITH HER AND MR BOBBY JONES SHE SAID SHE WILL CONTACT ME FRIDAY.

10/24 I CALLED HER SHE CALLED LATER APOLOGIZE FOR NOT RETURNING MY PHONE CALL AND THE INCONVENIENCE. SHE THEN ASKED FOR MORE TIME TILL MONDAY.

0/27 SHE SAID MAYBE GETTING A BUSSY TONE MIGHT BE TEMPORARILY BUSSY OUT LINES. THEN I ASKED ABOUT THE CALL FORWARDING IF ANY I EXPLAIN MS POWENDE HAD EXPLAINED ABOUT AVAILABILITY IF CUSTOMIZED BILLING IS IMPLMENTED.

SHE SAID SHE WOULD RESEARCH THAT AREA. WE THEN SPOKE OF CONFERENCE CALLING. WHILE NORSTAR HAS A CONFERENCE FEATURE (3) IT COMPELS USER TO UTILIZE ANOTHER LINE. THIS DEFEATS PURPOSE OF CONFERENCE CALLING TWO PERSONS IN A COMPANY DESIRE TO MAKE CONFERENCE CALLING TIES UP 4 LINES.

WHILE THE NORSTAR WAS REPRESENTED TO OUR FIRM AS A PRODUCT WHICH WOULD PROVIDE US WITH THE ABILITY TO AFFORD US TO FUNCTION THE SAME AS WE HAD IN THE PAST. THE ACTUAL INSTALLATION AND IT USE HAS DEMONSTRATED THAT IT FALLS SHORT OF ENABL;ING TO FUNCTION AS WE HAD IN THE PAST.

WHAT IS EXTREMELY SIGNIFICANT IS WHAT IT HAS BECOME SO EVIDENT THE INABILITY OF BELL SOUTH AND IT'S STAFF TO PROVIDE THE PROFESSIONAL ASSISTANCE THAT WE WERE PROMISED. THIS HINDERS US AND ANY OTHER CUSTOMERS ABILITY TO REPORT AND GET POSITIVE EFFECTIVE RESPONSES WITHIN BELL SOUTH REPRESENTATIVES.

10/29/1998 AFTER NOT HAVING ANY NOTIFICATION FROM MS CONNIE PAGE I CONTACTED MR BOBBY JONES WHOM I POLITELY ASK WHY HE HAD NOT RETURNED MY PREVIOUS CALLS. HIS RESPONSE WAS AS FOLLOW. I GOT YOUR MESSAGES AND I REFERRED YOUR CALL TO MS PAGE.

I GUESS WE ARE TO ASSUME THAT WHEN MR JONES GETS CALLS RATHER THAN RETURNING THEM HE DELEGATES THEM TO OTHERS RATHER THAN FOLLOWING THE PROFESSIONAL STANDARD OF RETURN CALL TO CALLER TO DEWTERMINE REASON OF CALL. MAYBE MR JONES HAS THE ABILITY TO KNOW BEFORE HAND WHY CUSTOMERS CALL HIM.

THIS PLACES OUR FIRM IN A DELIOCATE PREDICATMENT. BY PURCHASING THIS EQUIPMENT WE HAVE PLACED OUR SELVES IN A CATEGORY OR GROUP OF INDIVIDUALS WHICH THEIR BUSINESS PRACTICES WHICH ARE INEPT, DEFICIENT OR UNDESIRABLE TO WHAT MOST BUSSINES EXPECT. THE QUESTION THEN BECOMES SIMPLE. WHY NOT LET BELL SOUTH ALLOW THE COMPANY IN THIS CASE ABA IT OWN RESEARCH OF WHAT IS AND NOT AVAILABLE BY PROVIDING ABA THE PROPER TELEPHONE NUMBERS TO NORSTAR AND THOSE AT BELL SOUTH ISDN SERVICE GROUPS.

MANUEL LORA

C.E.O.

ABA PROFESSIONAL ASSOCIATION INC.

1101 Brickell Ave. Box # 310460

Miami, Florida 33131. USA

Phone 1-800-222-4373 USA & Canada
1-800-344-8211 From The Caribbean
800-122-06 From Venezuela
0130-814747 From Germany
046-059416 From Switzerland

FAX 1-800-442-0497 From USA, Canada, & Caribbean ELSEWHERE 305-374-0497

LOCAL NUMBERS 305- 374-3131, 374-3162, 374-6404 374-0838,

E-MAIL ABAHERE@WORLDNET.ATT.NET

OCTOBER 30, 1998

MS, CONNIE PAGE
5405 WINDWARD PARKWAY
ALPHARETTA GA. 30004

VOICE 1-800-782-7258
FAX 1-770-708-5598

SUBJECT : RPRT #11 FOLLOW UP.

DEAR MS PAGE , I WANT TO TAKE THE OPPORTUNITY TO THANK YOU FOR YOUR APOLOGY AND CONCERN AS TO THE ON GOING SITUATION WITH THE OPTIONS AND INSTALLATION. AS YOU HAD PREVIOUSLY STATED THIS IS SOMETHING THAT UNFORTUNATELY WAS AN OVERSIGHT BY THOSE AT BELL SOUTH MAKING THE CHANGES, AS YOU KNOW WE ARE DISTURB BECAUSE THE FEATURES WHICH WE ALWAYS HAD ARE NOT FUNCTIONING.

ON OUR LAST CONVERSATION YOU WERE TO FAX US A LETTER DETAILING YOUR FINDINGS AS TO WHAT IS AVAILABLE, WHAT IS NOT, WHEN THEY WILL BECOME AVAILABLE EITHER AS A EXPERIMENTAL, TEST VERSION OR OTHERWISE. WHAT ARE THE ALTERNATIVES. YOU HAD MENTIONED BUSY LINES, MONITORING ETC . WHILE REVIEWING THIS PLEASE CAN YOU FIND OUT IF ALL OF THE LINES ARE ISDN INCLUDING THE FAX LINES 305-374-0497. I HAVE SOME DOUBTS ABOUT THIS AND WOULD LIKE YOU TO CONFIRM IT FOR US.

ADDITIONALLY PLEASE CAN YOU ASSIST IN GETTING THIS JOB COMPLETED. CAN YOU PROVIDE A DATE AND TIME FOR COMPLETION AS WELL AS THE NAME OF THE TECHNICAL PERSON.

MANUEL LORA

C.E.O.

ABA PROFESSIONAL ASSOCIATION INC.

1101 Brickell Ave. Box # 310460

Miami, Florida 33131. USA

Phone 1-800-222-4373 USA & Canada
1-800-344-8211 From The Caribbean
800-122-06 From Venezuela
0130-814747 From Germany
046-059416 From Switzerland

FAX 1-800-442-0497 From USA, Canada, & Caribbean ELSEWHERE 305-374-0497

LOCAL NUMBERS 305- 374-3131, 374-3162, 374-6404 374-0838,

E-MAIL ABAHERE@WORLDNET.ATT.NET

NOVEMBER 01, 1998

MS, CONNIE PAGE
5405 WINDWARD PARKWAY
ALPHARETTA GA. 30004

VOICE 1-800-782-7258
FAX 1-770-708-5593

SUBJECT : RPRT #12 FOLLOW UP.

DEAR MS PAGE , YOUR LETTER CONTAINS LIMITED INFORMATION ON THE SUBSTANCE OF THE SERVICE. IT IS TRUE THAT I ASKED YOU TO RESPOND IN WRITING. HENCE, PLEASE AGAIN RESPOND ACCORDINGLY TO THE ISSUES STATED IN MY LETTER. HENCE, I SEE NO APOLOGY WITHIN THE CONTENTS OF YOUR LETTER, NOR A DIRECT RESPONSE AS TO THE OPTIONS AND INSTALLATION. AS YOU HAD PREVIOUSLY STATED THIS WAS IGNORED AND NEGLECTED BY THOSE AT BELL SOUTH RESPONSIBLE FOR THE CHANGES, THE FEATURES WHICH WE HAD ARE NOT FUNCTIONING.

WHILE REVIEWING THIS PLEASE CAN YOU FIND OUT IF ALL OF THE LINES ARE ISDN INCLUDING THE FAX LINES 305-374-0497. I HAVE SOME DOUBTS ABOUT THIS AND WOULD LIKE YOU TO CONFIRM IT FOR US.

THE COMPLETION OF THIS JOB HAS BEEN IGNORED AND WAS STARTED MONTHS AGO REMAINS UNFINISHED. CAN YOU INFORMED US OF WHO IS RESPONSIBLE FOR IT'S COMPLETION. IT IS BAD ENOUGH THAT THE COMMITMENT TIME WAS NEVER COMPLIED WITH I THINK IS TIME THIS IS HAMDLE IN A PROFESSIONAL MATTER . RESPECTFULLY WE REQUEST YOU PROVIDE US THE NAMES, ADDRESSES , AND TELEPHONE NUMBERS INCLUDING PAGES AND CELLULAR FOR THOSE IN OUR AREA)305) RESPONSIBLE FOR THIS.

ABA PROFESSIONAL ASSOCIATION INC.

1101 Brickell Ave. 310460

Miami, Florida 33131. USA

Phone 1-800-222-4373 USA & Canada
1-800-344-8211 From The Caribbean
800-122-06 From Venezuela
0130-814747 From Germany
046-059416 From Switzerland

FAX 1-800-442-0497 From USA, Canada, & Caribbean ELSEWHERE 305-374-0497
LOCAL NUMBERS 305- 374-3131, 374-3162, 374-6404 374-0838,
E-MAIL ABAHERE@WORLDNET.ATT.NET

NOVEMBER 3, 1998

MS, CONNIE PAGE
5405 WINDWARD PARKWAY
ALPHARETTA GA. 30004
VOICE 1-800-782-7258
FAX 1-770-708-5598

SUBJECT : RPRT #14 FOLLOW UP.

DEAR MS PAGE , I SPOKE YESTERDAY TO MS ELENA AT BELL SOUTH SYSTEMS IN REFERENCE TO THE LETTER SHE HAD SENT OUR FIRM IN SEPTEMBER 16. ACCORDINGLY SHE INFORMS US THAT THE FEATURES CAN BE FUNCTIONAL AND IMPLEMENTED. HOWEVER BELL SOUTH HAD NEVER SUBMITTED FOR AUTHORIZATION BY LOCAL PUBLIC SERVICE COMMISSION BILLING FOR SUCH ITEM IT NEVER GOT APPROVAL. WHEN THIS ISSUE WAS RAISED THOSE INVOLVED IN THE DECISION MAKING OPTED AGAINST SUBMITTING IT FOR APPROVAL AS A BUNDLE PROJECT TO PUBLIC SERVICE COMMISSION. ULTIMATELY I THINK THAT IF THAT CLIENTS AFFECTED COMPLAIN TO BELL SOUTH WE WOULD GET MORE COOPERATION AND ULTIMATELY APPROVAL. HENCE I MERELY SUGGESTED TO ELENA TO RE SUBMITTING LIMITING TO CALL WAITING AND FLEXIBLE CALL REMOTE ACCESS. THIS WOULD GIVE US A RESTRICTED OPTIONS BUT IT WOULD MAKE IT EASIER FOR ALL CONCERN INTERESTED PARTIES.

WHILE WE ARE WAITING FOR THEIR RESPONSE THE FOLLOWING QUESTIONS IS RAISED FOR THE NORSTAR SYSTEM WHICH WE PRESENTLY HAVE. WILL THE TELEPHONY ADAPTERS OR SYSTEM WE HAVE FUNCTION WITH ANALOG LINES. MEANTIME

ON THE INSTALLATION COMPLETION ISSUE I AM BAFFLED BY IGNACIO RESPONSE . UNDOUBTEDLY HE IS CONFUSED. THE TELEPHONY ADAPTER HAVE NEVER BEEN INSTALLED 3 WERE PLACED ON TOP OF 3 COMPUTERS WITHOUT CONNECTING THEM TO COMPUTERS. 3 REMAIN IN THEIR ORIGINAL BOXES STORED INSIDE A CREDENZA UNLESS THESE ARE EXTREMELY INTELLIGENT

ABA PROFESSIONAL ASSOCIATION INC.

1101 Brickell Ave. Box # 310460

Miami, Florida 33131. USA

Phone 1-800-222-4373 USA & Canada
1-800-344-8211 From The Caribbean
800-122-06 From Venezuela
0130-814747 From Germany
046-059416 From Switzerland

FAX 1-800-442-0497 From USA, Canada, & Caribbean ELSEWHERE
305-374-0497

LOCAL NUMBERS 305- 374-3131, 374-3162, 374-6404 374-0838,

E-MAIL ABAHERE@WORLDNET.ATT.NET

OCTOBER 26, 1998

MS, CONNIE PAGE
5405 WINDWARD PARKWAY
ALPHARETTA GA. 30004

VOICE 1-800-782-7258
FAX 1-770-708-5598

SUBJECT : RPRT #9 REQUEST FOR ASSISTANCE IN COMPLETION OF JOB.

DEAR MS PAGE , I RESPECTFULLY REQUEST YOUR ASSISTANCE IN THE COMPLETION OF THIS ASSIGNMENT. I HAVE LEFT SEVERAL MESSAGES WHICH AS OF THIS DATE HAVE NOT BEEN RESPONDED. AS YOU MIGHT BE INFORMED THE CONVERSION FROM ANALOG TO ISDN HAS BEEN COMPLETED AND APPEARS TO BE WORKING.

I HAVE YET TO SEE THE IMPROVEMENT IN THE QUALITY, SPEED IN TRANSFERRING OF FILES BUT I ASSUME WEE WILL SEE THIS ONCE JOB IS COMPLETED.

UNFORTUNATELY THEY KEEP TAKING IGNACIO RAMIREZ ON OTHER ASSIGNMENTS NOT AFFORDING HIM NOR US THE OPPORTUNITY OF COMPLETING THE JOB THAT ORIGINALLY
WAS DELEGATED TO HIM.

WHEN THE INITIAL INSTALLATION TOOK PLACE ALL OF THE LINES COMING OUT OF THE WALL WERE EXPOSE FOR THE PURPOSE OF WORKING WHILE TESTING WAS DONE. ONCE JOB COMPLETED THEY FAILED OR NEGLECTED TO REPLACE

COVERS LEAVING WIRES EXPOSE OR UNPROTECTED. THIS WENT ON FOR WEEKS.

RECENTLY ONE OF OUR LINES 305-374-4246 DISAPPEAR FROM SYSTEM SHORTLY AFTER I CONTACTED A REPAIR CENTER THEN A SECOND LINE (374-0838) DISAPPEAR. SHORTLY AFTER IT BECAME ACTIVE AGAIN. LYNN MALLO CALLED SEVERAL TIMES. PUBLIC SERVICE # 305-470-5600 TECHNICIAN TESTED LINES I ASKED HIM TO CALL SUPERVISOR SO HE CAN SEE WHAT THE PREVIOUS EMPLOYER HAD DONE. SUPERVISOR LUIS HERNANDEZ ARRIVED AT LOCATION HE INSISTED THAT THE EQUIPMENT PERSON DID IT. I SAID I VIVIDLY RECALLED THAT RAMOS TOLD WHOMEVER OTHER THAT HE DID NOT NEED IT ASSISTANCE TO REPLACE COVERS.

THEY TESTED 374-7246 IT IS OK UP TO FRONT ENTRANCE THEY THEN REFERRED MATTER TO ANOTHER TECHNICIAN IN ANOTHER DIVISION. WHILE I DO NOT UNDERSTAND WHY SO MANY DIFFERENT DEPARTMENTS AND INDIVIDUALS MY MAIN CONCERN IS TO COMPLETE WHAT THEY STARTED 2-3 MONTHS AGO. YET HERE WE ARE 2-3 MONTHS DOWN AFTER IT'S INITIATION JOB REMAINS INCOMPLETE. THIS IS ABSURD UNHEARD OF BY IN TODAY STANDARDS.

I HAVE LEFT SEVERAL MESSAGES FOR THE SALES PERSON WHOM INITIALLY SOLD ME THE SYSTEM SARAH RUIZ. 1-800-782-7258. I UNDERSTAND THAT EMPLOYEES WORK ON A COMMISSION BASIS NONE LESS THEY SHOULD UNDERSTAND THAT THERE ARE CERTAIN RESPONSIBILITIES THEY MOST ABIDE TO. THIS BRINGS FLASHBACKS FROM THE SUN MOON SYSTEM #30 DAYS.

UNFORTUNATELY THE TELEPHONY ADAPTERS WHICH WE WERE SOLD AND BILLED FOR ARE NOT INSTALLED AS OF YET. THE FEATURES FOR THE SYSTEM ARE NOT INSTALLED BECAUSE WE CAN NOT GET ANYONE THAT IS FAMILIAR WITH THE SYSTEM. THE CALL WAITING FEATURES, REMOTES ETC. ARE NOT IMPLEMENTED AND HENCE THEY DO NOT FUNCTION. IF WE UTILIZE A LINE WHEN A CALL COMES WHILE USING THAT SAME LINE WE HAVE NO WAY OF KNOWING. WHEN WE CALL FOR TECHNICAL SUPPORT AT 1-800-925-2525 THE STAFF AT THIS NUMBER IS LIMITED AND FUNCTIONS. WE ARE A TOTAL LOST WITH NO ASSISTANCE.

BOBBY JONES SEEM TO HAVE INSIDE INFORMATION WHEREAS NORTSAR WILL PROVIDE A BETA TEST FOR US THAT ARE EXPERIENCING THIS TYPE OF DIFFICULTY ADDITIONALLY THEY WILL UPDATE FREE OF CHARGE THEIR CUSTOMERS TO 5.0.

WHILE MS CONNIE PAGE WILL DO HER RESEARCH TO ASSIST US IN CORRECTING THE ESSENTIAL AREAS WHICH HER STAFF(MS DOLORES MASON) FORGOT, IGNORED OR MISTAKENLY OMITTED WHILE SWITCHING US FROM ANALOG TO ISDN. FLEXIBLE REMOTE, CALL WAITING, CONFERENCE CALLING ETC. I POINTED OUT TO ALL PARTIES THAT WHILE I KNOW SOME THINGS THEY SHOULD HAVE EASILY READILY ACCESS TO THE RELEVANT INFORMATION.

ULTIMATELY THEY COULD SET 3 LINES IN A LOOP TO ROLL OVER TO AVOID MISSING CALLS AND ALLOWING US TO HAVE ONE OR TWO LINES 374-3131 OR 305-374-3162 TO REMOTE FORWARD TO WHEREVER WE CHOOSE AT NO COST WHEN RINGING MORE THAN 5 TIMES. WHILE THIS CREATES A BURDEN WE NEED TO LOOK FOR A SOLUTION TO THE PHONE PROBLEM WHICH PLAGUE OUR FIRM DAILY.

WE HAVE BEEN INFORMED BY BELL SOUTH IN ATLANTA THAT OUR FIRM AS OF YET DO NOT HAVE AN ACCOUNT REP WHEN AND IF I DO WILL BE SOMEONE IN ATLANTA GA. 2) THEY HAVE AS MUCH OF A HARD TIME GETTING A HOLD OF TECHNICAL SUPPORT AS I DO I.E... LEE AND IGNACIO. MR. JONES ACKNOWLEDGE THAT WHILE EMPLOYED AT BELL SOUTH HE CONFRONTED THE SAME DIFFICULTIES THAT OTHER TECHNICIANS FACE AT PRESENT TIME NO TRAINING AT ALL. IGNACIO AND LEE BOTH DO BETTER THAN THE AVERAGE BECAUSE THEIR SELF IMPOSED MOTIVATION, WILLINGNESS, DESIRE TO LEARN WHILE ASSISTING CUSTOMERS. NONE LESS THEY STILL LACK THE TRAINING ON SOMETHING THAT HAS BEEN ON THE MARKET FOR SEVERAL YEARS WITH THE LARGEST LOCAL TELEPHONE SERVICE PROVIDER IN THE NATION U.S.A.

THIS PLACES THEIR CLIENTS, CUSTOMERS IN AN EXTREMELY SENSITIVE PREDICAMENT, ALMOST IMPOSSIBLE TO PROGRESS OR DEAL WITH THE NORMAL EVERY DAY TASK IN THE BUSINESS WORLD. THE MOST CONFLICTING QUESTION IS WHY BELL SOUTH KNEW AND SHOULD HAVE KNOWN FROM THEIR RECORDS, EXPERIENCE, EXPERTISE ETC, THESE SIGNIFICANT ISSUES . IT GROSS NEGLIGENCE IN NOT BRING IT TO THE ATTENTION OF THE CUSTOMER.. HENCE I SEE NO REASONS ON THIS PLANET ON WHY IS BELL SOUTH TINKERING WITH THE IDEA OF CHARGING THEIR CLIENTS, CUSTOMERS FOR OTHER EXPENSES WHICH UNEQUIVOCALLY ARE CAUSED BY BELL SOUTH NEGLIGENCE. I THINK THAT BELL SOUTH IF NEEDED TO ADD ADDITIONAL LINES THEY SHOULD DO SO AT THEIR EXPENSE WITHOUT FURTHER INCURRING OF EXPENSES TO THEIR CUSTOMERS. NORSTAR IF TRULY DESIRE TO BE COMPETITIVE SHOULD PROVIDE ASSISTANT WITH THEIR TECHNICAL SUPPORT STAFF VIA PHONE AND PHYSICALLY SINCE THEY HAVE THE TRAINING WHICH BELL SOUTH TECHNICIANS DO NOT HAVE ON THE NORSTAR DIGITAL EQUIPMENT.

I.E. YESTERDAY 10/23/1998 I SPENT 3 HOURS WITH BELL SOUTH REPRESENTATIVES ALL OVER THE PLACE, JACKSONVILLE, ATLANTA , FORT LAUDERDALE DALE MIAMI, ETC WE GET ROUTED TO THE CONVENIENCE OF BELL SOUTH, THEN WE ARE PLACED ON HOLD FOR UNLIMITED LENGTH OF TIMES THEN WE ARE ASKED NUMEROUS QUESTIONS ULTIMATELY WE ARE GIVEN OTHER NUMBERS TO CALL AND GET RE ROUTED TO OTHER NUMBERS OR OTHER INDIVIDUALS.

THIS PROCESS IMPEDES US OR PROHIBITS US FROM DEALING WITH THE NORMAL DAILY ROUTINES NOT COUNTING THOSE ISSUES THAT GET COMPLICATED ON THEIR OWN WHEN HANDLED BY INCOMPETENT INDIVIDUALS (HUMANS) I HAVE NOT BEEN ABLE TO AUDIT OUR PHONE BILLS FOR OVER 2 MONTHS PRECISELY THE LENGTH OF TIME THAT I HAVE BEEN INVOLVED IN THIS TRANSACTION WHICH REMAINS COMPLETED WHETHER .

WHAT BELL SOUTH FAILS TO REALIZE THAT THIS HINDERS OUR ABILITY TO FUNCTION NORMALLY TO THE STANDARD WE HAVE PROVIDED TO OUR CLIENTS, CUSTOMERS, PROVIDERS, VENDORS, WHOLESALERS, ASSOCIATES, FRIENDS, ETC, WHEN THESE COMPANIES REPRESENTATIVES ATTEMPT TO COMMUNICATE WITH US AND IF AND WHEN THEY UNEQUIVOCALLY THEY WOULD SEE A DRASTIC CHANGE IN OUR WAY OF OPERATING. I FIND IT IMPOSSIBLE TO MAINTAIN THEIR FAITH AND LOYALTY. IT WILL BE ASKING THEM TO WAIT TILL WHEN??????. AS PREVIOUSLY STATED AND THE RECORDS CONVINCINGLY DEMONSTRATE WE ARE IN THE 3RD MONTH BY IN TODAY STANDARD WITH THE TECHNOLOGY AVAILABLE, AND BEING HANDLE BY THE LARGEST LOCAL SERVICE TELEPHONE COMPANY IN THE FREE WORLD WE HAVE A SERIOUS PROBLEM WHICH ULTIMATELY WILL CAUSE DEVASTATING LOSSES TO ANY COMPANY.

THE VERBAL APOLOGIES ARE WELCOME BUT THE REALISTIC WAY WOULD BE TO PROVIDE DIRECT LETTERS TO THOSE WHOM ARE DISCONTENT WITH OUR SERVICES IN WAYS WHICH WE NORMALLY HANDLE OUR BUSINESS DEALINGS.

WE ARE BEING PUNISH FOR BEING FAITHFULL WHILE MAINTAINING OUR LOYALTY FOR OVER 15 YEARS TO BELL SOUTH,. WE PURCHASED THE SUN MOON SYSTEM STR#30 IN 1987-88 AT WHICH TIME WERE PROMISED THAT IT WAS THE BEST THING IN THE WORLD. WITHIN 2 YEARS THE SUN MOON COMPANY WAS OUT OF BUSINESS (FOLDED, BELLYUP) WE WERE LEFT WITH AN INEPT EQUIPMENT WHICH OFTEN BROKE DOWN STILL WE WERE BILLED AND ASK TO PAY FOR REPAIRS BY BELL SOUTH EVEN THOUGH IT WAS UNDER THE WARRANTY.

5 YEARS LATER AGAIN BELL SOUTH SALES REPRESENTATIVE LURES US INTO A SYSTEM WHICH THEY KNEW WE WERE LOOKING TO BUY FROM AT & T (LUCIENT TECHNOLOGY) MS RUIZ WAS PLEASANT, POLITE, AND CONVINCINGLY UNDOUBTEDLY A PROFESSIONALS SALES PERSON. THE REST IS A MOOT ISSUE. SHE NOW ABANDONS US IGNORES OUR CALLS AND OUR PLEAS FOR HELP GO UNANSWERED.

THE MATHEMATICAL EQUATION AS SHE PUTS IT IS SIMPLE THE SALE DOES NOT BRING ENOUGH COMMISSION TO COMPENSATE FOR THE COMPLICATIONS CREATED TO US BY THEIR INABILITY TO ADEQUATELY DETERMINE WHICH WAS PROPER AT THAT PRESENT TIME. SALES PERSON KNEW OR SHOULD HAVE KNOWN THAT THIS EQUIPMENT, SERVICES, SUPPORT WAS NOT READILY ACCEPTABLE TO THE NORMAL STANDARD OF OUR OR ANY OTHER COMPANIES DAILY FUNCTIONS. OUR FIRMS SEES ITSELF AS A CHILD WHOM IS BEING PUNISH FOR SOMETHING HE OR SHE HAS NO KNOWLEDGE OF. THIS IS DIFFICULT TO UNDERSTAND AND ACCEPT.

10/23/98 MS PAGE AFTER CONFEENCE WITH HER AND MR BOBBY JONES SHE SAID SHE WILL CONTACT ME FRIDAY.

10/24 I CALLED HER SHE CALLED LATER APOLOGIZE FOR NOT RETURNING MY PHONE CALL AND THE INCONVENIENCE. SHE THEN ASKED FOR MORE TIME TILL MONDAY.

0/27 SHE SAID MAYBE GETTING A BUSSY TONE MIGHT BE TEMPORARILY BUSSY OUT LINES. THEN I ASKED ABOUT THE CALL FORWARDING IF ANY I EXPLAIN MS POWENDE HAD EXPLAINED ABOUT
AVAILABILITY IF CUSTOMIZED BILLING IS IMPLMENTED.

SHE SAID SHE WOULD RESEARCH THAT AREA. WE THEN SPOKE OF CONFERENCE CALLING. WHILE NORSTAR HAS A CONFERENCE FEATURE (3) IT COMPELS USER TO UTILIZE ANOTHER LINE. THIS DEFEATS PURPOSE OF CONFERENCE CALLING TWO PERSONS IN A COMPANY DESIRE TO MAKE CONFERENCE CALLING TIES UP 4 LINES.

WHILE THE NORSTAR WAS REPRESENTED TO OUR FIRM AS A PRODUCT WHICH WOULD PROVIDE US WITH THE ABILITY TO AFFORD US TO FUNCTION THE SAME AS WE HAD IN THE PAST. THE ACTUAL
INSTALLATION AND IT USE HAS DEMONSTRATED THAT IT FALLS SHORT OF ENABL;ING TO FUNCTION AS WE HAD IN THE PAST.

WHAT IS EXTREMELY SIGNIFICANT IS WHAT IT HAS BECOME SO EVIDENT THE INABILITY OF BELL SOUTH AND IT'S STAFF TO PROVIDE THE PROFESSIONAL ASSISTANCE THAT WE WERE PROMISED. THIS HINDERS US AND ANY OTHER CUSTOMERS ABILITY TO REPORT AND GET POSITIVE EFFECTIVE RESPONSES WITHIN BELL SOUTH REPRESENTATIVES.

10/29/1998 AFTER NOT HAVING ANY NOTIFICATION FROM MS CONNIE PAGE I CONTACTED MR BOBBY JONES WHOM I POLITELY ASK WHY HE HAD NOT RETURNED MY PREVIOUS CALLS. HIS RESPONSE WAS AS FOLLOW. I GOT YOUR MESSAGES AND I REFERRED YOUR CALL TO MS PAGE.
I GUESS WE ARE TO ASSUME THAT WHEN MR JONES GETS CALLS RATHER THAN RETURNING THEM HE DELEGATES THEM TO OTHERS RATHER THAN FOLLOWING THE PROFESSIONAL STANDARD OF RETURN CALL TO CALLER TO DEWTERMINE REASON OF CALL. MAYBE MR JONES HAS THE ABILITY TO KNOW BEFORE HAND WHY CUSTOMERS CALL HIM.

THIS PLACES OUR FIRM IN A DELIOCATE PREDICATMENT. BY PURCHASING THIS EQUIPMENT WE HAVE PLACED OUR SELVES IN A CATEGORY OR GROUP OF INDIVIDUALS WHICH THEIR BUSINESS PRACTICES WHICH ARE INEPT, DEFICIENT OR UNDESIRABLE TO WHAT MOST BUSSINES EXPECT.
THE QUESTION THEN BECOMES SIMPLE. WHY NOT LET BELL SOUTH ALLOW THE COMPANY IN THIS CASE ABA IT OWN RESEARCH OF WHAT IS AND NOT AVAILABLE BY PROVIDING ABA THE PROPER TELEPHONE NUMBERS TO NORSTAR AND THOSE AT BELL SOUTH ISDN SERVICE GROUPS.

MANUEL LORA

C.E.O.

ABA PROFESSIONAL ASSOCIATION INC.

1101 Brickell Ave. Box # 310460

Miami, Florida 33131. USA

Phone 1-800-222-4373 USA & Canada
1-800-344-8211 From The Caribbean
800-122-06 From Venezuela
0130-814747 From Germany
046-059416 From Switzerland

FAX 1-800-442-0497 From USA, Canada, & Caribbean ELSEWHERE 305-374-0497

LOCAL NUMBERS 305- 374-3131, 374-3162, 374-6404 374-0838,

E-MAIL ABAHERE@WORLDNET.ATT.NET

OCTOBER 26, 1998

MS, CONNIE PAGE
5405 WINDWARD PARKWAY
ALPHARETTA GA. 30004

VOICE 1-800-782-7258
FAX 1-770-708-5593

SUBJECT : RPRT #10REQUEST FOR ASSISTANCE IN COMPLETION OF JOB.

DEAR MS PAGE , ON THIS LONG LETTER I MENTION SOME OF THE DIFFICULTIES THAT I HAVE EXPERIENCE IN THIS PROLONG PROCESS, HENCE, I RESPECTFULLY REQUEST YOUR ASSISTANCE IN THE COMPLETION OF THIS ASSIGNMENT. I HAVE LEFT SEVERAL MESSAGES WHICH AS OF THIS DATE THEY HAVE NOT BEEN RESPONDED. AS YOU MIGHT BE INFORMED THE CONVERSION FROM ANALOG TO ISDN IT APPEARS AS IT HAS HAS BEEN COMPLETED.

I HAVE YET TO SEE THE IMPROVEMENT IN THE QUALITY, SPEED IN TRANSFERRING OF FILES BUT I ASSUME WEE WILL SEE THIS ONCE JOB IS COMPLETED.

UNFORTUNATELY THEY KEEP TAKING IGNACIO RAMIREZ ON OTHER ASSIGNMENTS NOT AFFORDING HIM NOR US THE OPPORTUNITY OF COMPLETING THE JOB THAT ORIGINALLY WAS DELEGATED TO HIM.

WHEN THE INITIAL INSTALLATION TOOK PLACE ALL OF THE LINES COMING OUT OF THE WALL WERE EXPOSE FOR THE PURPOSE OF WORKING WHILE TESTING WAS DONE. ONCE JOB COMPLETED THEY FAILED OR NEGLECTED TO REPLACE COVERS LEAVING WIRES EXPOSE OR UNPROTECTED. THIS WENT ON FOR WEEKS.

RECENTLY ONE OF OUR LINES 305-374-4246 DISAPPEAR FROM SYSTEM SHORTLY AFTER I CONTACTED A REPAIR CENTER THEN A SECOND LINE (374-0838) DISAPPEAR. SHORTLY AFTER IT BECAME ACTIVE AGAIN. LYNN MALLO CALLED SEVERAL TIMES. PUBLIC SERVICE # 305-470-5600 TECHNICIAN TESTED LINES I ASKED HIM TO CALL SUPERVISOR SO HE CAN SEE WHAT THE PREVIOUS EMPLOYER HAD DONE. SUPERVISOR LUIS HERNANDEZ ARRIVED AT LOCATION HE INSISTED THAT THE EQUIPMENT PERSON DID IT. I SAID I VIVIDLY RECALLED THAT RAMOS TOLD WHOMEVER OTHER THAT HE DID NOT NEED IT ASSISTANCE TO REPLACE COVERS.

THEY TESTED 374-7246 IT IS OK UP TO FRONT ENTRANCE THEY THEN REFERRED MATTER TO ANOTHER TECHNICIAN IN ANOTHER DIVISION. WHILE I DO NOT UNDERSTAND WHY SO MANY DIFFERENT DEPARTMENTS AND INDIVIDUALS MY MAIN CONCERN IS TO COMPLETE WHAT THEY STARTED 2-3 MONTHS AGO. YET HERE WE ARE 2-3 MONTHS DOWN AFTER IT'S INITIATION JOB REMAINS INCOMPLETE. THIS IS ABSURD UNHEARD OF BY IN TODAY STANDARDS.

I THEN LEFT SEVERAL MESSAGES FOR THE SALES PERSON WHOM INITIALLY SOLD ME THE SYSTEM SARAH RUIZ. 1-800-782-7258. I UNDERSTAND THAT EMPLOYEES WORK ON A COMMISSION BASIS NONE LESS THEY SHOULD UNDERSTAND THAT THERE ARE CERTAIN RESPONSIBILITIES THEY MOST ABIDE TO. THIS BRINGS FLASHBACKS FROM THE SUN MOON SYSTEM #30 DAYS.

UNFORTUNATELY THE TELEPHONY ADAPTERS WHICH WE WERE SOLD AND BILLED FOR ARE NOT INSTALLED AS OF YET. THE FEATURES FOR THE SYSTEM ARE NOT INSTALLED BECAUSE WE CAN NOT GET ANYONE THAT IS FAMILIAR WITH THE SYSTEM. THE CALL WAITING FEATURES, REMOTES ETC. ARE NOT IMPLEMENTED AND HENCE THEY DO NOT FUNCTION. IF WE UTILIZE A LINE WHEN A CALL COMES WHILE USING THAT SAME LINE WE HAVE NO WAY OF KNOWING. WHEN WE CALL FOR TECHNICAL SUPPORT AT 1-800-925-2525 THE STAFF AT THIS NUMBER IS LIMITED AND FUNCTIONS. WE ARE OFTEN AT TOTAL LOST WITH NO ASSISTANCE.

MR BOBBY JONES PROVIDED TECHNICAL INFORMATION WHEREAS NORTSAR WILL PROVIDE A BETA TEST FOR US THAT ARE EXPERIENCING THIS TYPE OF DIFFICULTY ADDITIONALLY THEY WILL UPDATE FREE OF CHARGE THEIR CUSTOMERS TO 5.0.

WHILE MS CONNIE PAGE WILL DO HER RESEARCH TO ASSIST US IN CORRECTING THE ESSENTIAL AREAS WHICH HER STAFF (MS DOLORES MASON) FORGOT, IGNORED OR MISTAKENLY OMITTED WHILE SWITCHING US FROM ANALOG TO ISDN. FLEXIBLE REMOTE, CALL WAITING, CONFERENCE CALLING ETC. I POINTED OUT TO ALL PARTIES THAT WHILE I KNOW SOME THINGS THEY SHOULD HAVE EASILY READILY ACCESS TO THE RELEVANT INFORMATION.

ULTIMATELY THEY COULD SET 3 LINES IN A LOOP TO ROLL OVER TO AVOID MISSING CALLS AND ALLOWING US TO HAVE ONE OR TWO LINES 374-3131 OR 305-374-3162 TO REMOTE FORWARD TO WHEREVER WE CHOOSE AT NO COST

WHEN RINGING MORE THAN 5 TIMES. WHILE THIS CREATES A BURDEN WE NEED TO LOOK FOR A SOLUTION TO THE PHONE PROBLEM WHICH PLAGUE OUR FIRM DAILY.

WE HAVE BEEN INFORMED BY BELL SOUTH IN ATLANTA THAT OUR FIRM AS OF YET DO NOT HAVE AN ACCOUNT REP WHEN AND IF I DO WILL BE SOMEONE IN ATLANTA GA. 2) THEY HAVE AS MUCH OF A HARD TIME GETTING A HOLD OF TECHNICAL SUPPORT AS I DO I.E... LEE AND IGNACIO. MR. JONES ACKNOWLEDGE THAT WHILE EMPLOYED AT BELL SOUTH HE CONFRONTED THE SAME DIFFICULTIES THAT OTHER TECHNICIANS FACE AT PRESENT TIME NO TRAINING AT ALL. IGNACIO AND LEE BOTH DO BETTER THAN THE AVERAGE BECAUSE THEIR SELF IMPOSED MOTIVATION, WILLINGNESS, DESIRE TO LEARN WHILE ASSISTING CUSTOMERS. NONE LESS THEY STILL LACK THE TRAINING ON SOMETHING THAT HAS BEEN ON THE MARKET FOR SEVERAL YEARS WITH THE LARGEST LOCAL TELEPHONE SERVICE PROVIDER IN THE NATION U.S.A.

THIS PLACES THEIR CLIENTS, CUSTOMERS IN AN EXTREMELY SENSITIVE PREDICAMENT, ALMOST IMPOSSIBLE TO PROGRESS OR DEAL WITH THE NORMAL EVERY DAY TASK IN THE BUSINESS WORLD. THE MOST CONFLICTING QUESTION IS WHY BELL SOUTH KNEW AND SHOULD HAVE KNOWN FROM THEIR RECORDS, EXPERIENCE, EXPERTISE ETC, THESE SIGNIFICANT ISSUES . IT GROSS NEGLIGENCE IN NOT BRING IT TO THE ATTENTION OF THE CUSTOMER.. HENCE I SEE NO REASONS ON THIS PLANET ON WHY IS BELL SOUTH TINKERING WITH THE IDEA OF CHARGING THEIR CLIENTS, CUSTOMERS FOR OTHER EXPENSES WHICH UNEQUIVOCALLY ARE CAUSED BY BELL SOUTH NEGLIGENCE. I THINK THAT BELL SOUTH IF NEEDED TO ADD ADDITIONAL LINES THEY SHOULD DO SO AT THEIR EXPENSE WITHOUT FURTHER INCURRING OF EXPENSES TO THEIR CUSTOMERS. NORSTAR IF TRULY DESIRE TO BE COMPETITIVE SHOULD PROVIDE ASSISTANT WITH THEIR TECHNICAL SUPPORT STAFF VIA PHONE AND PHYSICALLY SINCE THEY HAVE THE TRAINING WHICH BELL SOUTH TECHNICIANS DO NOT HAVE ON THE NORSTAR DIGITAL EQUIPMENT.

I.E. YESTERDAY 10/23/1998 I SPENT 3 HOURS WITH BELL SOUTH REPRESENTATIVES ALL OVER THE PLACE, JACKSONVILLE, ATLANTA , FORT LAUDERDALE DALE MIAMI, ETC WE GET ROUTED TO THE CONVENIENCE OF BELL SOUTH, THEN WE ARE PLACED ON HOLD FOR UNLIMITED LENGTH OF TIMES THEN WE ARE ASKED NUMEROUS QUESTIONS ULTIMATELY WE ARE GIVEN OTHER NUMBERS TO CALL AND GET RE ROUTED TO OTHER NUMBERS OR OTHER INDIVIDUALS.

THIS PROCESS IMPEDES US OR PROHIBITS US FROM DEALING WITH THE NORMAL DAILY ROUTINES NOT COUNTING THOSE ISSUES THAT GET COMPLICATED ON THEIR OWN WHEN HANDLED BY INCOMPETENT INDIVIDUALS (HUMANS) I HAVE NOT BEEN ABLE TO AUDIT OUR PHONE BILLS FOR OVER 2 MONTHS PRECISELY THE LENGTH OF TIME THAT I HAVE BEEN INVOLVED IN THIS TRANSACTION WHICH REMAINS COMPLETED WHETHER .

Please make check payable to BellSouth in U.S. funds.

TOTAL AMOUNT DUE	AMOUNT PAID
$1,929.16	

305 374-0497 361 0442
Feb 15, 1999
MP B01 E00

☐ Check here if correspondence included.

#000344

P.O. BOX 33009
CHARLOTTE NC
28243-0001

ABA PROFSNL ASSOC
801 BRICKELL BAY DR
SUITE 662
MIA FL 33131

305937404973610449999902010570300000000000192916000019291 6

CORRESPONDENCE

Correspondence included with your payment takes longer to reach our Service Centers. For a faster response, please call us at the number shown in the "BellSouth Helpful Numbers" section of this bill.

WHEN TO PAY YOUR BILL

Your payment is due when you receive your bill. If we do not receive payment for your local and long distance charges by the "Due Before" date, your account will become past due.

If we disconnect your service for non-payment, you must pay the past due amount and a charg to reconnect your service. You may also be required to pay a deposit.

HOW TO PAY YOUR BILL

You can mail your payment or pay at one of our Authorized Payment Agencies. You may also use our Automatic Funds Transfer Plan.

When mailing your payment, write the amount paid in the box on the remittance stub. Also, write your area code and telephone number on your check. Place your check and remittance stub in the return envelope or a standard envelope and mail it to the location below:

BellSouth
P.O. Box 33009
Charlotte, NC 28243-0001

TAX CODES FOR CALLS

A - Federal Only
B - Federal and State
G - State Only
H - Federal, State and Local
I - State and Local
J - Local Only
K - Federal and Loca

RATE CODES FOR CALLS

D - Day
E - Evening
N - Night/Weekend
R* - Standard
T* - Discount
Y* - Economy
*Overseas only
C - Calling Card
S - Station
P - Person
X - Conference
F - Call Forward
M - Multiple Rate Peric

ADDITIONAL INFORMATION

Additional information regarding your telephone service can be found in the Front Pages of your telephone directory.

ABA PROFESSIONAL ASSOCIATION INC.

1101 Brickell Ave. 310460
Miami, Florida 33131.USA

Phone 1-800-222-4373 USA & Canada
1-800-344-8211 From The Caribbean
800-22-06 From Venezuela
0130-814747 From Germany
046-059416 From Switzerland

Fax 1-800-442-0497 From USA, Canada, & Caribbean ELSEWHERE 305-374-0497

LOCAL NUMBERS 305-- 374-3131, 374-3162, 374-6404 374-0838,

E-MAIL abahere@worldnet.att.net.

9/1998

SARA, RUIZ
1-800-782-7258
FAX 770-708-5598

Subject : RPRT#6 REQUEST FOR ASSISTANCE IN COMPLETION OF JOB.

DEAR SARA, I RESPECTFULLY REQUEST YOUR ASSISTANCE IN THE COMPLETION OF THIS ASSIGNMENT. I HAVE LEFT SEVERAL MESSAGES WHICH AS OF THIS DATE HAVE NOT BEEN RESPONDED. AS YOU MIGHT BE INFORMED THE TRANSITION OF THE COMMUNICATION FROM ANALOG TO ISDN HAS BEEN COMPLETED AND APPEARS TO BE WORKING WITH CONDITIONAL LIMITED CAPACITY..

WHILE WE HAVE YET TO SEE THE IMPROVEMENT IN THE QUALITY, WE HAVE TO WAIT TILL THIS JOB IS COMPLETED. APPARENTLY IS NO WHERE IN THE NEAR FUTURE.

UNFORTUNATELY THEY KEEP TAKING IGNACIO RAMIREZ ON OTHER ASSIGNMENTS NOT AFFORDING HIM NOR US THE OPPORTUNITY OF COMPLETING THE JOB.

ADDITIONALLY AND MOST SIGNIFICANT IS THE RELEVANT ISSUES OF THE OPTIONS OR FEATURES THAT ARE TO WORK IN CONJUNCTION WITH BELL SOUTH FEATURES OR OPTIONS.

AT PRESENT TIME WE HAVE NO CALL WAITING, CONFERENCE CALLING, *69 *70 ETC MOST OF THE FEATURES WE HAVE ALWAYS HAD.

THE SYSTEM AS PER THE INSTRUCTIONS AND OPERATIONS MANUAL THAT I HAVE READ HAS WITHIN A CUSTOM ANSWER WITH LIMITED OPTIONS THAT COULD FUNCTION TOGETHER WITH THE FLASH START TALK WHICH WE DO NOT HAVE.

AS PREVIOUSLY MENTIONED THE BELL SOUTH OPTIONS WHICH WE HAD WITH THE ANALOG WHICH FOR REASONS UNBEKNOWNST TO US HAVE BEEN DELETED OR REMOVED. HENCE, NOT IMPLEMENTED IN THIS ISDN EVEN THOUGH WE REQUESTED SINCE THE SIGNING OF THE AGREEMENT. ADDITIONALLY COMMON SENSE TELLS US ALL THAT WHEN DOING SUCH TRANSFERS IT IS COMMON THAT A REVIEW IS DONE OF PREVIOUS ORDERS AND MATCH THEM AS LONG AS IT IS POSSIBLE. UNFORTUNATELY THOSE THAT KEEP GETTING ASIDE TO THE SIMPLE TASK OF DOING THEIR JOBS SEEM UNWILLINGLY TO DO THIS AND PAS THE BUCK AS WE SAY TO OTHERS.

THIS FOLLOW UP CONSUMES AN INCREDIBLE AMOUNT OF TIME WHICH IS BELL SOUTH OBLIGATION AND RESPONSIBILITY AS A 1) VENDOR OF THE EQUIPMENT. 2) PROVIDER OF THE NEW SERVICE. 3) CONTRACTOR FOR THE INSTALLATION. 3) PROVIDER OF THE OLD SERVICE.

THIS IS NOT ABA PROFESSIONAL ASSOCIATION RESPONSIBILITY. BELL SOUTH HAS FAIL TO ACT WITHIN THE NORMAL STANDARD NORMS OF OPERATION WHILE CONDUCTING ITSELF WITH THE MOST GROSS NEGLIGENT CONDUCT.

PLEASE CONTACT ME IMMEDIATELY.

9/11/98 SPOKE TO MS ARECES SHE PROPERLY INFORM ME THAT THIS WAS ASSIGN . TO THE ISDN WHICH IS THE SERVICE WE HAVE AT PRESENT TIME.

9/11/1998 MS DOLORES MASON CONTACTED OUR OFFICE SHE CLAIMS SHE WAS ASSIGNED THE TROUBLE REPORTED WITH THE FEATURES OR OPTIONS. SHE STATED THAT FLEXIBLE REMOTE, MAIL BOXES AND OTHER FEATURES ARE NOT AVAILABLE WITH ISDN LINES.

I POLITELY EXPLAINED TO MS MASON THAT SHE WAS UNEQUIVOCALLY ERRONEOUS. THAT I HAD NO IDEA WHERE HER SOURCE OF INFORMATION WAS BUT CERTAINLY IT COULD NOT BE A BELL SOUTH KNOWLEDGEABLE PERSON. SINCE WE HAD MAIL BOXES

SHE THEM STATED THAT SHE WAS GOING TO CALL ME BACK WITHIN 2 MINUTES. WHILE WAITING I REVIEW MY REPORT AND SAW THAT THIS WAS THE SAME DOLORES MASON WHOM HAD ORIGINALLY BEEN INVOLVED IN THE TRANSITION FROM ANALOG TO ISDN. AT WHICH TIME SHE HAD IN AN ARROGANT FASHION STATED TO ME THAT WHEN THE CHANGE WAS MADE THE FEATURES WOULD BE TRANSFER AUTOMATICALLY. UNFORTUNATELY FOR US OUR EXPERIENCE WERE VERY CONFLICTING WITH MS MASON STATEMENT. AT PRESENT TIME WE ARE INVOLVED IN WHAT IS COMMONLY KNOWN AS PIECE MEAL OR BANDAID CORRECTION.

EVERY DAY WE CALL WE REPORT PROBLEM, WHEN AND IF THE PROBLEM IS FIX ANOTHER PROBLEM ARISES THEN CONTINUE TO BE IN A LOOP FOR WHICH SEEMS NO EASY SOLUTION.

AFTER 10 MINUTES OR SO I CALLED MRS. MASON TELEPHONE NUMBER AND LEFT A POLITE FIRM MESSAGE NOT TO CONTACT SINCE THIS FIRM AND MANAGEMENT STAFF (CONNIE PAGE) HAD AGREED TO NOT HAVE HER INVOLVED IN FURTHER DEALINGS WITH OUR COMPANY SINCE HER INCOMPETENCE HAD CAUSED US SO MANY DIFFICULTIES, . INCLUDING AN EXORBITANT LENGTH OF TIME GETTING PART OF OUR SERVICE TO FUNCTION LIMITED ON A CONDITIONAL BASIS.

9/12 BERT VITALE FROM BELL SOUTH REPAIRS IN FORT LAUDERDALE CONTACTED OUR OFFICE IN LINE ONE 374-3131 ASKING FOR ABA TRAVEL GROUP. IT WAS OBVIOUS IMMEDIATELY THAT THE INFORMATION PROVIDED TO HIM WAS ERRONEOUS. HE PROCEEDED TO ASK ME WHAT WAS THE PROBLEM. THIS FELLOW HAD NO CLUE AS TO WHAT WAS GOING ON. ONCE AGAIN BELL SOUTH IN GROSS NEGLIGENCE FASHION AT THIS POINT WE CONTINUE TO BE INCONVENIENCE ENORMOUS AMOUNT OF

ABA PROFESSIONAL ASSOCIATION INC.

1101 Brickell Ave. 310460
Miami, Florida 33131.USA

Phone 1-800-222-4373 USA & Canada
1-800-344-8211 From The Caribbean
800-22-06 From Venezuela
0130-814747 From Germany
046-059416 From Switzerland

Fax 1-800-442-0497 From USA, Canada, & Caribbean ELSEWHERE 305-374-0497

LOCAL NUMBERS 305-- 374-3131, 374-3162, 374-6404 374-0838,

E-MAIL abahere@worldnet.att.net.

SEPTEMBER 9, 1998

SARA, RUIZ
1-800-782-7258
FAX 770-708-5598

Subject : RPRT #07REQUEST FOR ASSISTANCE IN COMPLETION OF JOB.

DEAR SARA, I RESPECTFULLY REQUEST YOUR ASSISTANCE IN THE COMPLETION OF THIS ASSIGNMENT. I HAVE LEFT SEVERAL MESSAGES WHICH AS OF THIS DATE HAVE NOT BEEN RESPONDED. AS YOU MIGHT BE INFORMED THE TRANSITION OF THE COMMUNICATION FROM ANALOG TO ISDN HAS BEEN COMPLETED AND APPEARS TO BE WORKING.

I HAVE YET TO SEE THE IMPROVEMENT IN THE QUALITY, SPEED IN TRANSFERRING OF FILES BUT I ASSUME WEE WILL SEE THIS ONCE JOB IS COMPLETED.

UNFORTUNATELY THEY KEEP TAKING IGNACIO RAMIREZ ON OTHER ASSIGNMENTS NOT AFFORDING HIM NOR US THE OPPORTUNITY OF COMPLETING THE JOB.

ANOTHER SIGNIFICANT AND RELEVANT ISSUES IS THE OPTIONS OR FEATURES THAT ARE BUNDLE UP AS A PROMOTION OF THE PACKAGE. THE SYSTEM AS PER THE INSTRUCTIONS AND OPERATIONS MANUAL HAS WITHIN A CUSTOM ANSWER WITH LIMITED OPTIONS THAT COULD FUNCTION TOGETHER WITH THE FLASH START TALK WHICH WE DO NOT HAVE.

ASIDE FROM THAT, THE OPTIONS WE HAD WITH THE ANALOG WHICH FOR REASONS UNBEKNOWNST TO US HAVE NOT BEEN IMPLEMENTED IN THIS ISDN. WE HAD REQUESTED FROM THE INCEPTION OF OUR AGREEMENT AND SIGNING OF SAME. COMMON SENSE TELLS US ALL THAT WHEN DOING SUCH TRANSFERS IT IS COMMON THAT A COMPLETE REVIEW IS DONE OF ALL COMPONENTS OR

FEATURES MAINTAIN ALL THAT ARE POSSIBLE OR MATCH THEM WITH COMPATIBLE ONES. ULTIMATELY CUSTOMER MUST BE NOTIFIED OF SITUATION.

UNFORTUNATELY I AM DAILY CONFRONTED WITH PEACE MEAL DETAILS WHICH CONSUMES A GREAT PORTION OF MY TIME. THIS WAS NOT PART OF THE AGREEMENT NOR SHOULD I HAVE THE RESPONSIBILITY OF BELL SOUTH EMPLOYEES. THIS FIRM IS A PAYING CUSTOMER NOT AN UNPAID EMPLOYEE OR A COMPANY DOING GOOD DEEDS. .

CAROLYN MARYWEATHERS IN ATLANTA HER JOBS IS NOT DUE TO CUSTOMERS.

THESE ARE INDIVIDUAL THAT ON SATURDAY WAS TOLD TO MONITOR THE SYSTEM SO IF AND WHEN IT LOST THE FEATURES HE WOULD RE STORE THEM IMMEDIATELY. WHEN I SPOKE TO THE BELL SOUTH REPRESENTATIVES ON 9/4/1998 THEY PLACED A CONFERENCE CALL OF WHICH I WAS A PARTICIPANT. I STATED THAT THE FEATURES WOULD HAVE TO BE REINSTATED IMMEDIATELY. THIS WAS AGAINST THE IDEAS OF A FEMALE WHOM THOUGHT IT WAS NOTHING TO HAVE US WAITING TILL THE FOLLOWING TUESDAY.

WHEN I LEFT THE OFFICE THE MAIN FEATURES OF CONCERN MAIL BOX AND FLEXIBLE REMOTE WERE TESTED BY ME AND WERE FUNCTIONING WITH LIMITED CAPACITY.

ON SATURDAY THEY CONTINUE TO FUNCTION AS PER MR. RICK WEATHERBY STATEMENT HIS JOB WAS EXCLUSIVELY TO MONITOR THEM TO CONTINUE TO OPERATE ACCORDINGLY, AT SOME POINT MONDAY I REALIZED THEY WERE NOT OPERATING PROPERLY.

THE WE CALLED ELENA POWENDE WHOM WORKS UNDER Mr. BOB WATSON. HER REACTION WAS TO DELEGATE THIS TO JEAN PEERS WHOM WHILE BEING APOLOGETIC DID NOT SEEM TO BE WILLING TO REVIEW ERRORS AND MISTAKE TO AVOID THEIR RE OCCURRENCE.

IT IS MY UNDERSTANDING THAT WHILE MS POWENDER OPTED TO DELEGATE TO OTHER SHE HAD BEEN INSTRUCTED EARLIER TO PERSONALLY RESOLVE ALL PENDING MATTERS.

WAS ASSIGNED THIS BY HER SUPERIORS. I HAVE DEALT WITH MS POWENDE SINCE THE DAY WE LOST SERVICE. I HAVE HEARD HER DIFFERENT EXCUSES, I HAVE OFTEN PARTICIPATED IN CONVERSATION RELATED TO SERVICE WHERE SHE TRANSFERRED ME OUT TO OTHER. I HAVE EVER HAD MRS.. POWENDE CALL ME TO INQUIRE AS TO WHETHER THE JOB OR PROBLEM WAS CORRECTED SUCCESSFULLY .

IT IS REALLY FRUSTRATING TO HAVE TO BE INVOLVE IN THIS ENORMOUS TASK OF FOLLOW UP AND AFTER SEVERAL WEEKS SEE LITTLE PROGRESS. IT AFFECTS OUR OPERATION AND PERFORMANCE AND WE CAN NOT TOLERATE THIS SITUATION TO CONTINUE.

PREVIOUS TO THIS LETTER I WROTE A VOLUMINOUS REPORT WHICH AS OF THIS DATE I HAVE RECEIVE NO WRITTEN RESPONSE FROM THOSE WITHIN BELL SOUTH MANAGEMENT. .

I HAVE CALLED CONNIE PAGE WHOM WAS IN VACATION SPOKE TO A CAROLYN MARYWEATHERBY WHOM CLAIMS HER EMPLOYMENT DOES NOT DEPEND ON CUSTOMER. SHE IS UNDER THE OPINION THAT SHE WOULD STILL HAVE A JOB EVEN IF BELLSOUTH HAD NO CUSTOMERS. WHAT A PERCEPTION IN A "HUMAN" MIND. THIS IS THE MENTALITY OF MOST EMPLOYEES AT BELLSOUTH.

ABA PROFESSIONAL ASSOCIATION INC.

1101 Brickell Ave. 310460
Miami, Florida 33131.USA

Phone 1-800-222-4373 USA & Canada
1-800-344-8211 From The Caribbean
800-22-06 From Venezuela
0130-814747 From Germany
046-059416 From Switzerland

Fax 1-800-442-0497 From USA, Canada, & Caribbean ELSEWHERE 305-374-0497

LOCAL NUMBERS 305-- 374-3131, 374-3162, 374-6404 374-0838,

E-MAIL abahere@worldnet.att.net.

August 25, 1999

SARA, RUIZ
1-800-782-7258
FAX 770-708-5598

Subject : RPRT #08 REQUEST FOR ASSISTANCE IN COMPLETION OF JOB.

DEAR SARA, I RESPECTFULLY REQUEST YOUR ASSISTANCE IN THE COMPLETION OF THIS ASSIGNMENT. I HAVE LEFT SEVERAL MESSAGES WHICH AS OF THIS DATE HAVE NOT BEEN RESPONDED. AS YOU MIGHT BE INFORMED THE CONVERSION FROM ANALOG TO ISDN HAS BEEN COMPLETED AND APPEARS TO BE WORKING.

I HAVE YET TO SEE THE IMPROVEMENT IN THE QUALITY, SPEED IN TRANSFERRING OF FILES BUT I ASSUME WEE WILL SEE THIS ONCE JOB IS COMPLETED.

UNFORTUNATELY THEY KEEP TAKING IGNACIO RAMIREZ ON OTHER ASSIGNMENTS NOT AFFORDING HIM NOR US THE OPPORTUNITY OF COMPLETING THE JOB.

WE CALL REPAIRS A FELLOW BY THE NAME OF TODD SMITH STATED THAT IN THE COMPUTER SCREEN FOR ALL CUSTOMERS OUR COMPANY NAMES APPEARS BUT NO ZIP CODE, YET HIS RESPONSE IS SAME NO ACCOUNT EXECUTIVE HAS BEEN ASSIGNED TO OUR ACCOUNT AS OF YET. I WAS THEN TRANSFERRED TO CLAYDE ANDERSON WHOM REFERRED ME TO SOMEONE ELSE. N/R CONTACTED 780-2222 REPORTED 305-374-7246 OUT OF SERVICE NO OUT NO IN. SPOKE TO MRS. TANGELA MAJOR SHE GAVE ME COMMITMENT TIME OF 12:00 FOLLOWING DAY I THEN CALLED IN AFTERNOON MS SUSAN R ID# 2917. THE FOLLOWING MORNING I EXPLAINED TO MS MRS. GRACE PAL THAT THE COMMITMENT TIME WAS NOON

THEY FAILED TO MEET COMMITMENT TARGET TIME. MRS. PAL STATED IT WAS GAVE ME HER DIRECT LINE 1-800-337-9689 XT 2528 SHE GAVE ME SPID # 305374724601 CIRCUIT ID 70IBS512986 SHE THEN TICKET # HB253276 SHE THEN REFERRED LINE TESTER TOM REFUSED TO PROVIDE HIS LAST NAME SAID CALLER COULD BE A MASS MURDERER I THEN SPOKE TO SUPERVISOR LYNN MALL 1-800-338-0428 WHOM UNDERSTANDS WHY I AM ANNOYED AT TOMS STATEMENTS XT 738. SHE IS AWARE OF PROBLEM TROUBLE SHOOTING WITH BELL SOUTH LOCALLY,

305-374-0838 BECAME ACTIVE AGAIN. LYNN MALLO CALLED SEVERAL TIMES. PUBLIC SERVICE # 305-470-5600 TECHNICIAN TESTED LINES I ASKED HIM TO CALL SUPERVISOR SO HE CAN SEE WHAT THE PREVIOUS EMPLOYER HAD DONE. SUPERVISOR LUIS HERNANDEZ ARRIVED AT LOCATION HE INSISTED THAT THE EQUIPMENT PERSON DID IT. I SAID I VIVIDLY RECALLED THAT RAMOS TOLD WHOMEVER OTHER THAT HE DID NOT NEED IT THE COVERS OFF TO PUT THEM BACK ON.

THEY TESTED 374-7246 IT IS OK UP TO FRONT ENTRANCE I RESPECTFULLY REQUESTED TO BE AFFORDED THE OPPORTUNITY TO PHYSICALLY DETERMINE THAT THE LINES WERE FUNCTIONING ACCORDINGLY UNFORTUNATELY WE CAN NO LONGER RELY ON WHAT THE TECHNICIAN OR OTHERS TELL US UNLESS WE CAN INDEPENDENTLY VERIFY IT.

THEY THEN REFERRED MATTER TO ANOTHER TECHNICIAN IN ANOTHER DIVISION. WHILE I DO NOT UNDERSTAND WHY SO MANY DIFFERENT DEPARTMENTS AND INDIVIDUALS MY MAIN CONCERN IS TO COMPLETE WHAT IT WAS STARTED 2-3 MONTHS AGO.

I HAVE LEFT SEVERAL MESSAGES FOR THE SALES PERSON WHOM INITIALLY SOLD ME THE SYSTEM SARAH RUIZ. 1-800-782-7258 TO NO AVAIL.

UNFORTUNATELY THE TELEPHONY ADAPTERS WHICH WE WERE SOLD AND BILLED FOR ARE NOT INSTALLED AS OF YET. THE FEATURES FOR THE SYSTEM ARE NOT INSTALLED BECAUSE WE CAN NOT GET ANYONE THAT IS FAMILIAR WITH THE SYSTEM. THE CALL WAITING FEATURES, REMOTES ETC. ARE NOT IMPLEMENTED AND HENCE THEY DO NOT FUNCTION. IF WE UTILIZE A LINE WHEN A CALL COMES WHILE USING THAT SAME LINE WE HAVE NO WAY OF KNOWING. WHEN WE CALL FOR TECHNICAL SUPPORT AT 1-800-925-2525 THE STAFF AT THIS NUMBER IS LIMITED AND FUNCTIONS. NETWORK 1-800-

BOBBY JONES SEEM TO HAVE INSIDE INFORMATION WHEREAS NORTSAR WILL PROVIDE A BETA TEST FOR US THAT ARE EXPERIENCING THIS TYPE OF DIFFICULTY ADDITIONALLY THEY WILL UPDATE FREE OF CHARGE THEIR CUSTOMERS TO 5.0

MEANWHILE MS RUIZ SUPERVISOR MS CONNIE PAGE WILL DO HER RESEARCH TO ASSIST US IN CORRECTING THE ESSENTIAL AREAS WHICH HER STAFF(MS DOLORES MASON) FORGOT, IGNORED OR MISTAKENLY OMITTED WHILE SWITCHING US FROM ANALOG TO ISDN. FLEXIBLE REMOTE, CALL WAITING,

CONFERENCE CALLING ETC. I POINTED OUT TO ALL PARTIES THAT WHILE I KNOW SOME THINGS THEY SHOULD HAVE EASILY READILY ACCESS TO THE RELEVANT INFORMATION.

ULTIMATELY THEY COULD SET 3 LINES IN A LOOP TO ROLL OVER TO AVOID MISSING CALLS AND ALLOWING US TO HAVE ONE OR TWO LINES 374-3131 OR 305-374-3162 TO REMOTE FORWARD TO WHEREVER WE CHOOSE AT NO COST WHEN RINGING MORE THAN 5 TIMES. WHILE THIS CREATES A BURDEN WE NEED TO LOOK FOR A SOLUTION TO THE PHONE PROBLEM WHICH PLAGUE OUR FIRM DAILY.

THIS FIRM AS OF YET DO NOT HAVE AN ACCOUNT REP WHEN AND IF I DO WILL BE SOMEONE IN ATLANTA GA. 2) THEY HAVE AS MUCH OF A HARD TIME GETTING A HOLD OF TECHNICAL SUPPORT AS I DO I.E... LEE AND IGNACIO. MR. JONES ACKNOWLEDGE THAT WHILE EMPLOYED AT BELL SOUTH HE CONFRONTED THE SAME DIFFICULTIES THAT OTHER TECHNICIANS FACE AT PRESENT TIME NO TRAINING AT ALL. IGNACIO AND LEE BOTH DO BETTER THAN THE AVERAGE BECAUSE THEIR SELF IMPOSED MOTIVATION, WILLINGNESS, DESIRE TO LEARN WHILE ASSISTING CUSTOMERS. NONE LESS THEY STILL LACK THE TRAINING ON SOMETHING THAT HAS BEEN ON THE MARKET FOR SEVERAL YEARS WITH THE LARGEST LOCAL TELEPHONE SERVICE PROVIDER IN THE NATION U.S.A.

THIS PLACES THEIR CLIENTS, CUSTOMERS IN AN EXTREMELY SENSITIVE PREDICAMENT, ALMOST IMPOSSIBLE TO PROGRESS OR DEAL WITH THE NORMAL EVERY DAY TASK IN THE BUSINESS WORLD. THE MOST CONFLICTING QUESTION IS WHY BELL SOUTH KNEW AND SHOULD HAVE KNOWN FROM THEIR RECORDS, EXPERIENCE, EXPERTISE ETC, THESE SIGNIFICANT ISSUES . IT GROSS NEGLIGENCE IN NOT BRING IT TO THE ATTENTION OF THE CUSTOMER.. HENCE I SEE NO REASONS ON THIS PLANET ON WHY IS BELL SOUTH TINKERING WITH THE IDEA OF CHARGING THEIR CLIENTS, CUSTOMERS FOR OTHER EXPENSES WHICH UNEQUIVOCALLY ARE CAUSED BY BELL SOUTH NEGLIGENCE. I THINK THAT BELL SOUTH IF NEEDED TO ADD ADDITIONAL LINES THEY SHOULD DO SO AT THEIR EXPENSE WITHOUT FURTHER INCURRING OF EXPENSES TO THEIR CUSTOMERS. NORSTAR IF TRULY DESIRE TO BE COMPETITIVE SHOULD PROVIDE ASSISTANT WITH THEIR TECHNICAL SUPPORT STAFF VIA PHONE AND PHYSICALLY SINCE THEY HAVE THE TRAINING WHICH BELL SOUTH TECHNICIANS DO NOT HAVE ON THE NORSTAR DIGITAL EQUIPMENT.

I.E. YESTERDAY 10/23/1998 I SPENT 3 HOURS WITH BELL SOUTH REPRESENTATIVES ALL OVER THE PLACE, JACKSONVILLE, ATLANTA , FORT LAUDERDALE DALE MIAMI, ETC WE GET ROUTED TO THE CONVENIENCE OF BELL SOUTH, THEN WE ARE PLACED ON HOLD FOR UNLIMITED LENGTH OF TIMES THEN WE ARE ASKED NUMEROUS QUESTIONS ULTIMATELY WE ARE GIVEN OTHER NUMBERS TO CALL AND GET RE ROUTED TO OTHER NUMBERS OR OTHER INDIVIDUALS.

THIS PROCESS IMPEDES US OR PR PROHIBITS US FROM DEALING WITH THE NORMAL DAILY ROUTINES

NOT COUNTING THOSE ISSUES THAT GET COMPLICATED ON THEIR OWN WHEN HANDLED BY INCOMPETENT INDIVIDUALS (HUMANS) I HAVE NOT BEEN ABLE TO AUDIT OUR PHONE BILLS FOR OVER 2 MONTHS PRECISELY THE LENGTH OF TIME THAT I HAVE BEEN INVOLVED IN THIS TRANSACTION WHICH REMAINS COMPLETED WHETHER

Thank you for choosing BellSouth to help you learn the True Nature of customer service.

BELLSOUTH®

Nobody knows a neighbor like a neighbor.™

Small Business Services
675 West Peachtree Street, Suite 27D55
Atlanta, GA 30375

A BA Travel Group *
801 Brickell Bay Dr, Ste 662
Miami FL 33131

Dear Valued Small Business Customer:

Thank you for your recent purchase of:

- Message Waiting Indicator

We're confident that by taking advantage of BellSouth's products and services, your business will learn the True Nature of customer service.

To show our appreciation for selecting BellSouth to help you learn the True Nature of customer service, we're giving you $19.75 cash back on your entire purchase. Simply detach the check from the bottom of this letter.

You can count on BellSouth to provide solutions that will address your business telecommunications and customer needs - today and in the future. If you have any questions about your purchase, or if you'd like to learn more about other products and services available to you, please call your BellSouth Small Business Specialist at 780-2885.

Sincerely,

Mark Prol
Team Leader, Product Management

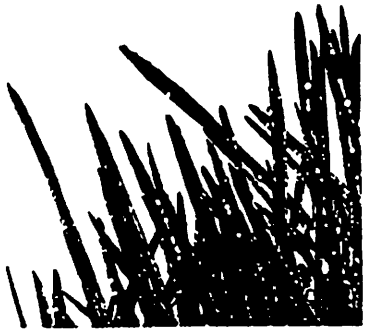

0000251 BSBLE185 L11860.01

SBLE185

9814025443
64-975
612

BELLSOUTH®

DATE January 22, 1999

PAY TO THE ORDER OF A BA Travel Group * $19.75

AMOUNT Nineteen Dollars and 75/100 DOLLARS

FIRST UNION NATIONAL BANK OF GEORGIA
VALDOSTA, GA

EXPIRES 150 DAYS FROM DATE ISSUED

A BA Travel Group *
CUSTOMER NAME

305 374-0838 360
CUSTOMER ACCOUNT NUMBER

AUTHORIZED SIGNATURE

3536688 -

HOLDER IS RESPONSIBLE FOR LOSS, THEFT OR DESTRUCTION. Check cannot be replaced.
All applicable sales taxes will be computed on the full sales price of any taxable service or services for which credit is allowed, and no tax will be added to the amount credited under this program.

⑈9814025443⑈

Thank you for choosing BellSouth to help you learn the True Nature of customer service.

BELLSOUTH®
Nobody knows a neighbor like a neighbor.

Small Business Services
675 West Peachtree Street, Suite 27D55
Atlanta, GA 30375

Aba Profsnl Assoc
801 Brickell Bay Dr Suit 662
Mia FL 33131

Dear Valued Small Business Customer:

Thank you for your recent purchase of:

- Enhanced Caller ID
- Three Way Calling
- Call Forward Busy Line
- Call Forward Don't Answer-Ring Control

PD
1/26/99
CK1101
$32.48
CERT 45.49
TOTAL $77.97

We're confident that by taking advantage of BellSouth's products and services, your business will learn the True Nature of customer service.

To show our appreciation for selecting BellSouth to help you learn the True Nature of customer service, we're giving you $45.49 cash back on your entire purchase. Simply detach the check from the bottom of this letter.

You can count on BellSouth to provide solutions that will address your business telecommunications and customer needs - today and in the future. If you have any questions about your purchase, or if you'd like to learn more about other products and services available to you, please call your BellSouth Small Business Specialist at 780-2885.

Sincerely,

Mark Prol
Team Leader, Product Management

0000253 BSBLE185 L11860.01

BSBLE185
BSBLE103

9814025445
64-975
612

BELLSOUTH®

DATE January 22, 1999

PAY TO THE ORDER OF Aba Profsnl Assoc $45.49

AMOUNT Forty-Five Dollars and 49/100 DOLLARS

FIRST UNION NATIONAL BANK OF GEORGIA
VALDOSTA, GA

EXPIRES 150 DAYS FROM DATE ISSUED

Aba Profsnl Assoc
CUSTOMER NAME

305 374-0838 359
CUSTOMER ACCOUNT NUMBER

Carol Soler
AUTHORIZED SIGNATURE

3483634 -1313473503

HOLDER IS RESPONSIBLE FOR LOSS, THEFT OR DESTRUCTION. Check cannot be replaced.
All applicable sales taxes will be computed on the full sales price of any taxable service or services for which credit is allowed, and no tax will be added to the amount credited under this program

⑈981402544 5⑈

BELLSOUTH®

BellSouth Small Business Services

Now you can get the speed of ADSL advanced Internet technology with BellSouth.net® FastAccess℠ Internet Service.

Aba Profsnl Association
801 Brickell Bay Dr Apt 662
Miami, FL 33131-2937

Dear Valued Small Business Customer:

Every company has the same problem: how to work faster. Now there's a concrete solution. BellSouth introduces an exciting new service in your city that will speed up your entire Internet experience.

BellSouth.net® FastAccess℠ Internet Service with ADSL.
What used to take 18 minutes can now take 11 seconds.

Finally, everything you do online will move quicker. FastAccess Internet Service with ADSL (or Asymmetric Digital Subscriber Lines) gives you Internet connections at up to T-1 speeds* — at a fraction of the cost. So your business gets lightning fast access to text files, graphics, audio or video as well as large presentations and software downloads.

Reduce your operating expenses: FastAccess Internet Service with ADSL lets you surf and fax or have phone conversations — on the same line.

You don't need to go to the expense of installing an additional phone line. FastAccess Internet Service with ADSL lets you talk on the phone or get a fax at the same time that you read e-mails, download files or do research on the Internet.

You get BellSouth MIS support 24 hours a day, seven days a week.

BellSouth is one of the first companies in this area to deliver ADSL technology. We know how it works and we're available to you and your business 24/7 should you need any assistance.

2375

Call 1-888-321-ADSL or your Account Executive now, to take advantage of the ADSL revolution.

Save up to 95% on download times and receive faxes or phone calls over the same line as your Internet connection. You're already prequalified for BellSouth.net FastAccess Internet Service, so simply call us toll-free or contact us at **www.smlbiz.bellsouth.com/adsl/ltr** to learn more or to order service.

Sincerely,

Rich Walker
Product Manager, Small Business Services

*Actual connection speed may vary. Service not available in all areas.
Prequalification does not guarantee service availability by premises. When installed at your location, installation and activation fees may apply.

BSBLE004

01-00021996

63-660 1/670

7/31 19 98

PAY TO THE ORDER OF BSES $ 287 90

Two Hundred Eighty Seven Dollars & 90/100 DOLLARS

FLORIDA INTERNATIONAL BANK
MAIN OFFICE 01
PERRINE, FLORIDA
33157-5692

0501874130555 0211 00 08-05-98

FOR 6762822001
For Hosley Computers

⑈00000 28790⑈

Bell South Did not refunded this.

BSFS EQUIPMENT LEASING
Invoice

LESSEE NAME & ADDRESS	LEASE AGREEMENT NO.
ABA PROFESSIONAL ASSOCIATION, INC.	6762822-001

This is your **Invoice** for the deposit required to be submitted with the Lease documents. The deposit will be applied as indicated below:

Deposit to be applied toward payment of the first month's rent*	$	287.90
Deposit to be applied toward payment for first and last month's rent	$	
Deposit to be held as security	$	
Other	$	
	$	
Less Deposit Amount Previously Received	$	
Total Amount Due	$	287.90

*The amount of rent has been established based upon the estimate of the total price as set forth in the Lease Agreement. The amount of rent does not include taxes, etc. Additional adjustments, if any, will be included in subsequent invoices.

Please return your payment with the Lease documents to the remittance address shown below.

Remit to: BSFS EQUIPMENT LEASING
501 Corporate Centre Drive, Suite 600
Franklin, Tennessee 37067

BSFS EQUIPMENT LEASING

Acceptance Certificate

LESSEE	LEASE AGREEMENT NO.
ABA PROFESSIONAL ASSOCIATION, INC.	6762822-001

Lessee acknowledges that all of the System covered by the above-referenced Lease has been furnished, that delivery and installation have been fully completed as required, and that the System is in good operating order and condition and accepted as satisfactory in all respects by Lessee. The System is irrevocably accepted by Lessee for all purposes under the Lease.

Lessee authorizes Lessor to pay for the System and acknowledges that Lessor is relying upon this executed Certificate of Acceptance as authorization to pay the Supplier for the System.

ABA PROFESSIONAL ASSOCIATION, INC. (Lessee)

BY _____
Authorized Representative

PRINT NAME Manuel Rosen

TITLE C.E.O.

DATE 12/30/98

PLEASE RETAIN UNTIL YOU'RE
READY TO ACCEPT THE SYSTEM

INVOICE

No.

INVOICE DATE 7-22-98

CUSTOMER'S ORDER NO. BSDIG

SOLD TO: ABA Prof. Assoc.
801 Brickell Bay Dr.
Tower #4 Ste 662 Miami Fl

SHIP TO: ABA P.A.
801 Brickell
Bay Driv. #662
Miami Fl.

SALESPERSON	SHIPPED VIA	TERMS	F.O.B.
Costa		C.O.D.	

QTY. ORDERED	QTY. SHIPPED	DESCRIPTION	UNIT	AMOUNT
7	7	Multitech ISDN Modem	179.1343	
		Internal M#1281		
7	7	Installation	-80.00	560.00
		Installed - Lines are		
		not in placed.		

Adams
NC2812

INVOICE

STATE OF FLORIDA

DIVISION OF
TELECOMMUNICATIONS
WALTER D'HAESELEER
DIRECTOR
(850) 413-6600

Public Service Commission

August 11, 1999

Mr. Manuel Lora
ABA Professional Association Inc.
801 Brickell Bay Drive
Tower-4, Suite #662
Miami, FL 33131

RECEIVED
SEP 09 1999
CMU

Re: Complaint against BellSouth (CATS #237627R)

Dear Mr. Lora:

As we discussed by telephone, I have been assigned as technical support for your complaint against BellSouth. I have reviewed the entire file. While you have done an excellent job of outlining the events that occurred, I am having difficulty determining some of the specific details of the case. I also note that there are virtually no documents, such as bills, in the file, other than letters from both you and BellSouth. To help me ascertain the facts in this case, please answer the following questions and provide the requested documents. Note that my questions are very specific. It will be helpful to me if you will keep your responses for each item to what I have asked. Number responses in the order the questions appear below. Feel free to use the space between each question to write in answers when possible. If there are other important facts or details you believe may not already be included in your file, please feel free to add them as a separate item at the end.

1) Please list all telephone numbers for which you have a dispute in this complaint. 374-3131 374-3162 - 374-6404 374-0457 374-0838 374-7264 374-0069

2) Are any of these telephone numbers still being used by you or your company? If so, please list which ones. 374-3131 374-3162 374-6404 374-0838 374-7264 and FAX LINE 374-0457

3) What specific features were you unable to obtain through ISDN service?
NONE

4) Did you have these features prior to obtaining ISDN service?
PRIOR WE HAD CONFERENCE calling call waiting CALLER ID REMOTE FORWARD, REMOTE ANSWER

Mr. Manuel Lora
Page 2
August 11, 1999

5) Please provide copies of all bills for each of the disputed telephone numbers. So that we can determine the amount of your bills and the features you subscribed to prior to the installation, begin with bills one full month prior to the installation of the ISDN and continue to the present. Please provide all pages of these bills. Black out any confidential information, such as client telephone numbers.

SEE attached Limite Reports Provided By Bell South.

6) On what date was installation of the ISDN begun? 8/10/98 Inspection Date Missed. 8/12/98 Placed (Location) Inspected 8/14/98 Installation "Failed" (Fri, Sat, Sund) No Service. Monday New Equipt Arrived.

7) Please list the date of each occasion that your service was out as a result of the problem with ISDN, and the length of time the service was out. 8/14 (Fri) 8/15 (Sat) 8/16 (Sun) 8/17 (Mon)

Dedicated FAX Line 374-0497

8) Please state specifically for each problem you encountered the dollar amount of refund you believe you are entitled to. If a refund or partial refund has been received, please list it also. Do not net the amounts. List by the date of the bill the charge appeared on and the amount of each item. If you have any difficulty with the charges, please state which bill you believe they appear on and I will be glad to assist in determining the amounts.

Date of Bill	Telephone Number	Amount Disputed	Date of bill showing refund or credit	Amount of Refund or Credit	Amount remaining to be refunded

SEE Attached Receipt

9) If you believe some remedy is appropriate other than a refund, please state what it is.

BELLSOUTH

BellSouth Communication Systems
5555 Windward Parkway, Suite B
Alpharetta, GA 30201-3895

June 10, 1998
Manuel Lara
ABA
905 S. Bayshore Drive
S1625, 1626
Miami, FL 33131

RECEIVED
SEP 09 1999
CMU

Dear Mr. Lara:

Thank you for your interest in the Norstar telephone system from BellSouth Communication Systems. BellSouth has the resources necessary to provide you with the best equipment and service available; just ask one of our 10,000 BellSouth Norstar customers.

The BellSouth Norstar system is fully digital, cost efficient, and its ease of use, feature rich sets and reliability are unsurpassed. With nearly 6 million telephone sets in over 70 countries, ***Norstar is the #1 telephone system in the world.*** And that's because Norstar not only meets the needs of business; it anticipates them.

Enclosed is a proposal for a new BellSouth Norstar telephone system. The proposal outlines the equipment summary, which includes a one year warranty, and installation details. Should you have any questions about the enclosed material, please feel free to contact me at 800-782-7258.

Sincerely,

Sara Ruiz

Sara Ruiz
Account Executive

374-3131

Memorandum

To: Mr. Manwell Lora

From: Doris W. Freeman

Date: 11/03/98

Re: Repair Service Representative

Mr. Lora,

This Memorandum acknowledges that we discussed problems that you encountered with Angela Barnes checking on trouble ticket 468610. Angela was informally counseled at that time.

BellSouth Business appreciates your business. It is our goal to provide Excellent Customer Service. To obtain this goal we know it requires the Best employees servicing our customers.

Bell South

Dear Ann: My wife and I recently visited her 86-year-old mother in Oklahoma. While we were there, she asked us to look at her telephone bill, which showed lease charges for four phones at $4.45 each. She had been paying these lease charges for over 23 years. We discovered that one of the phones had been taken out of her house 20 years before, and two phones had not been used for over 15 years.

I wonder how many senior citizens are unknowingly paying lease charges for old phones that are no longer in use.

Bob in Grand Prairie, Texas

Most people today buy their phones. However, it wouldn't hurt for my readers to take a good, hard look at their next phone bill and see if there are any incorrect leasing charges.

BellSouth
Communication Systems
5555 Windward Parkway, Suite B
Alpharetta, Georgia 30201-3895

November 16, 1998

Mr. Manuel Lora
ABA Professional Association, Inc.
1101 Brickell Avenue
Miami, FL 33131

Dear Mr. Lora:

Thank you for your continued willingness and participation in our attempts to resolve your outstanding issues. Our goal has been to satisfy your needs as well as keep you a BellSouth Communication Systems Norstar customer. Unfortunately, it appears we will not be able to do so with our Norstar system. Therefore, we would like to help you make provisions to choose another vendor. Upon choosing another equipment vendor, we can have your network re-installed to its prior state without charge. (although monthly recurring charges will apply) Future ISDN enhancements cannot be predicted, so no guarantees can be given regarding charges of future ISDN installations. Larry Antonucci will work with you to remove the existing Norstar system within the next month to supply as smooth a transition as possible. There will be no charge for this removal.

We apologize for the inconvenience to your business, but our intent is to make it as easy as possible to replace the Norstar system with a system that will satisfy your needs best.

Sincerely,

Connie Page

Connie Page
Sales Manager
BellSouth Sales Center

374-3131

September 16, 1998

A; B, A Travel Group
801 Brickell Bay Dr.
Suite 662
Miami, Fl. 33131

Dear Mr. Lora:

Per our conversation on Tuesday, September 15, 1998, the following features are not tariffed for ISDN service:

Call Waiting
Flexible Call Forwarding
Remote Access to Call Forwarding
Fax Overflow Service

I have processed a Special Service Arrangement Request Form, document SF98-5156-00, to request the feasibility and pricing of these features. This process will take approximately 2 weeks. I will follow up with a contract when the Agreement has been processed.

If you require any additional information, please fax me a request at 1-800-330-5170.

Sincerely,

Elena Powanda
Project Manager II

BELLSOUTH

BellSouth Business Systems, Inc.
Suite 1249
8451 N. Federal Highway
Fort Lauderdale, Florida 33308-1483

February 9,1999

ABA Professional Assoc.
% Manuel Lora
801 Brickell Bay Dr.
Miami, Fl. 33131

RE: 305 374-0497

Dear Mr. Lora:

SERVICES

Per our conversation today, this letter is confirmation that [redacted] has credited your accounts for the installation and monthly service of the ISDN services. In addition, the installation charges associated with the re-connection of analog business lines were also credited.

As of today, no further credits are due.

If you have any questions regarding this matter please call me at 954 958-6222.

Sincerely,

Elena Powanda
Project Manager

BELLSOUTH

ABA PROFSNL ASSOC
Account Number: 305 374-3131 617 0449
Bill Period Date: Jul 14, 1998

Thank you for choosing BellSouth. We sincerely appreciate your business.

Summary of Charges

	Amount
Previous Charges	
Amount of Last Bill	462.02
Less Payments	.00
Balance	462.02
Current Charges	
BellSouth	
Monthly Service Charges	238.19
Local Usage	27.18
Other Charges and Credits	7.26
Itemized Calls	13.61
Taxes	55.70
Total Current Charges for BellSouth Companies	341.94
Total Current Charges Due Before Aug 4	341.94
Total Amount Due	803.96

Important Notice(s)

Late Charge Reminder: A 1.5% Late Payment Charge will apply to any unpaid balance as of Aug 17.

Nonpayment of Regulated Charges may result in discontinuance of service. Failure to pay unregulated and certain other charges, all of which are identified by ** on your bill, will not result in an interruption of local service. The amount of Regulated Charges may be obtained by calling 305 780-2800.

Helpful Numbers

BellSouth Telecommunications, Inc. (BST)

NOTE: Numbers for other companies are listed on their bill pages.

Billing Questions or to Place an Order:

If calling from within the Florida BellSouth service area	305 780-2800
If calling from outside Florida or outside the Florida BellSouth service area	1-800-753-8172

(continued on page 2) ▶

***** PLEASE FOLD, TEAR HERE AND RETURN THIS PORTION WITH YOUR PAYMENT. *****

Please make check payable to BellSouth in U.S. funds.

CURRENT CHARGES DUE BEFORE	PAST DUE AMOUNT	TOTAL AMOUNT DUE	AMOUNT PAID
Aug 4	$462.02	$803.96	

305 374-3131 617 0449
Jul 14, 1998
AV 0903 B01 A000809

☐ Check here if correspondence included.

#000809 1 AV 0.23

P.O. BOX 70807
CHARLOTTE NC
28272-0807

ABA PROFSNL ASSOC
801 BRICKELL BAY DR
APT 662
MIA FL 33131-2937

305937431316170440903802010140100000000000046202000080396

BELLSOUTH

ABA PROFSNL ASSOC
Account Number: 305 374-3131 617 0449
Bill Period Date: Jul 14, 1998

Helpful Numbers (continued)

BellSouth Telecommunications, Inc. (BST)

NOTE: Numbers for other companies are listed on their bill pages.

Repair:
If calling from within the Florida BellSouth service area 305 780-2222
Text Telephone (TTY) Users 7:00 AM - 7:00 PM (CST) Monday - Friday:
If calling from within the Florida BellSouth service area 305 780-2274
If calling from outside Florida or outside the Florida BellSouth service area 1 800 251-5325

Detailed Statement of Charges

Monthly Service Charges — *Amount*

Monthly Service - Jul 14 thru Aug 13

Basic Services	*Quantity*	*Unit Charge*	
1. Business Line	3 ...	29.10	87.30
2. Emergency 911 Charge. This charge is billed on behalf of Dade County.	# ...	# **	1.50
3. FCC Charge for Interstate Toll Access	3 ...	8.17	24.51
4. Telecommunications Access System Act Surcharge	3 ...	.12 **	.36
Total Basic Services			113.67
Optional Services	*Quantity*	*Unit Charge*	
5. Three-Way Calling	2 ...	4.00	8.00
6. Fax Overflow Service	1 ...	12.95 **	12.95
7. Flexible Call Forwarding with Audio Calling Name	2 ...	11.00	22.00
8. Call Forwarding Busy Line	3 ...	3.25	9.75
9. Call Forwarding Don't Answer	1 ...	3.25	3.25
10. Call Forwarding Don't Answer Ring Control	2 ...	3.25	6.50
11. Remote Activation of Call Forwarding	1 ...	9.00	9.00
12. Multiple Feature credit for four features	1 ...	#	.90CREDIT
13. Multiple Feature credit for five features	2 ...	#	2.70CREDIT
14. Message Waiting - Stutter Dialtone	1 ...	.75	.75
15. Enhanced Caller ID with Anonymous Call Rejection	3 ...	15.99	47.97
16. MemoryCall® Answering Service, Personal/Extension Mailbox	1 ...	7.95 **	7.95
Total Optional Services			124.52
Total Monthly Service Charges			238.19

Local Usage — *Amount*

Local Usage Summary for 305 374-3131

Local Measured Usage to the Expanded Area

Calls	Total Mins	Charges
85	290	20.80

17. Local Usage Summary 20.80

Local Usage Summary for 305 374-0497

Local Measured Usage to the Expanded Area

Calls	Total Mins	Charges
7	36	2.44

18. Local Usage Summary 2.44

Quantity and/or Unit Charge may not apply
** Unregulated Charge

(continued)▶

BELLSOUTH

ABA PROFSNL ASSOC
Account Number: 305 374-3131 617 0449
Bill Period Date: Jul 14, 1998

Detailed Statement of Charges

Itemized Calls (continued) — *Amount*

305 374-0497 (continued)

Direct Dialed Calls (continued)

	Date	*Place Called*	*Number Called*	*Rate**	*Time*	*Min*	
31.	07/06	3 WAY CALL CHG	612 369-1410	HD	05:50PM		.75
32.	07/07	3 WAY CALL CHG	305 441-2027	HD	05:58PM		.75
33.	07/08	3 WAY CALL CHG	305 819-0722	HD	12:13PM		.75
34.	07/08	3 WAY CALL CHG	612 369-1419	HD	02:45PM		.75
35.	07/08	3 WAY CALL CHG	612 369-1410	HD	02:46PM		.75
36.	07/09	3 WAY CALL CHG	305 599-1999	HD	12:29PM		.75
37.	07/09	3 WAY CALL CHG	612 315-4541	HD	03:47PM		.75
38.	07/10	3 WAY CALL CHG	305 975-4892	HD	03:45PM		.75
39.	07/10	3 WAY CALL CHG	612 369-1410	HD	03:49PM		.75
40.	07/12	CALL RETRN		HD	02:18PM	1	.75

Total Direct Dialed Calls 8.25

Total Charges for 305 374-0497 ..... 8.25

The above total does not include the following taxes:

Federal Tax	$0.25
State/Local Tax	$1.24
Florida Gross Receipts Surcharge	$0.08

Total Itemized Calls 13.61

Taxes — *Amount*

Taxes on Regulated Services

41.	Federal Tax	7.99
42.	State/Local Tax	19.90
43.	Florida Gross Receipts Surcharge	2.98
44.	City Tax	16.87
45.	Franchise Charge	6.60

Total Taxes on Regulated Services 54.34

Taxes on Unregulated Services

46.	State/Local Tax	**	1.36

Total Taxes on Unregulated Services 1.36

Total Taxes 55.70

Total BellSouth Current Charges 341.94

* Taxes and Rates Applied - See Back of First Page

** Unregulated Charge

BELLSOUTH

ABA PROFSNL ASSOC
Account Number: 305 374-3131 617 0449
Bill Period Date: Aug 14, 1998

Thank you for choosing BellSouth. We sincerely appreciate your business.

Summary of Charges

	Amount
Previous Charges	
Amount of Last Bill	803.96
Less Payments	.00
Balance	803.96
Current Charges	
BellSouth	
Monthly Service Charges	238.10
Local Usage	39.12
Other Charges and Credits	12.27
Itemized Calls	33.30
Optional Calling Services	16.25
Taxes	63.13
Total Current Charges for BellSouth Companies	402.17
Total Current Charges Due Before Sep 4	402.17
Total Amount Due	1,206.13

Important Notice(s)

Late Charge Reminder: A 1.5% Late Payment Charge will apply to any unpaid balance as of Sep 15.

Nonpayment of Regulated Charges may result in discontinuance of service. Failure to pay unregulated and certain other charges, all of which are identified by ** on your bill, will not result in an interruption of local service. The amount of Regulated Charges may be obtained by calling 305 780-2800.

(continued on page 2) ▶

***** PLEASE FOLD, TEAR HERE AND RETURN THIS PORTION WITH YOUR PAYMENT. *****

Please make check payable to BellSouth in U.S. funds.

CURRENT CHARGES DUE BEFORE	PAST DUE AMOUNT	TOTAL AMOUNT DUE	AMOUNT PAID
Sep 4	$803.96	$1,206.13	

305 374-3131 617 0449
Aug 14, 1998
AV 0917 B01 A000661

☐ **Check here if correspondence included.**

#000661 2 AV 0.46

P.O. BOX 70807
CHARLOTTE NC
28272-0807

ABA PROFSNL ASSOC
801 BRICKELL BAY DR
APT 662
MIA FL 33131-2937

30593743131617044091780201018010000000000008039600001206 13

BELLSOUTH

ABA PROFSNL ASSOC
Account Number: 305 374-3131 617 0449
Bill Period Date: Aug 14, 1998

Helpful Numbers

BellSouth Telecommunications, Inc. (BST)
NOTE: Numbers for other companies are listed on their bill pages.

Billing Questions or to Place an Order:	
If calling from within the Florida BellSouth service area	305 780-2800
If calling from outside Florida or outside the Florida BellSouth service area	1-800-753-8172
Repair:	
If calling from within the Florida BellSouth service area	305 780-2222
Text Telephone (TTY) Users 7:00 AM - 7:00 PM (CST) Monday - Friday:	
If calling from within the Florida BellSouth service area	305 780-2274
If calling from outside Florida or outside the Florida BellSouth service area	1 800 251-5325

Detailed Statement of Charges

Monthly Service Charges — *Amount*

Monthly Service - Aug 14 thru Sep 13

Basic Services	*Quantity*	*Unit Charge*	
1. Business Line	3 ...	29.10	87.30
2. Emergency 911 Charge. This charge is billed on behalf of Dade County.	# ...	# **	1.50
3. FCC Charge for Interstate Toll Access	3 ...	8.14	24.42
4. Telecommunications Access System Act Surcharge	3 ...	.12 **	.36
Total Basic Services			113.58
Optional Services	*Quantity*	*Unit Charge*	
5. Three-Way Calling	2 ...	4.00	8.00
6. Fax Overflow Service	1 ...	12.95 **	12.95
7. Flexible Call Forwarding with Audio Calling Name	2 ...	11.00	22.00
8. Call Forwarding Busy Line	3 ...	3.25	9.75
9. Call Forwarding Don't Answer	1 ...	3.25	3.25
10. Call Forwarding Don't Answer Ring Control	2 ...	3.25	6.50
11. Remote Activation of Call Forwarding	1 ...	9.00	9.00
12. Multiple Feature credit for four features	1 ...	#	.90CREDIT
13. Multiple Feature credit for five features	2 ...	#	2.70CREDIT
14. Message Waiting - Stutter Dialtone	1 ...	.75	.75
15. Enhanced Caller ID with Anonymous Call Rejection	3 ...	15.99	47.97
16. MemoryCall® Answering Service, Personal/Extension Mailbox	1 ...	7.95 **	7.95
Total Optional Services			124.52
Total Monthly Service Charges			238.10

Local Usage — *Amount*

Local Usage Summary for 305 374-3131

Local Measured Usage to the Expanded Area

Calls	Total Mins	Charges
77	282	20.00

17. Local Usage Summary 20.00

Quantity and/or Unit Charge may not apply
** Unregulated Charge

(continued)▶

BELLSOUTH

ABA PROFSNL ASSOC
Account Number: 305 374-3131 617 0449
Bill Period Date: Aug 14, 1998

Detailed Statement of Charges

Itemized Calls (continued) — ***Amount***

305 374-3131 (continued)

Direct Dialed Calls (continued)

	Date	Place Called	Number Called	Rate*	Time	Min	Amount
34.	07/31	CALL RETRN		HD	06:50PM	1	.75
35.	07/31	CALL RETRN		HD	06:51PM	1	.75
36.	07/31	CALL RETRN		HD	07:19PM	1	.75
37.	08/03	CALL RETRN		HD	01:22PM	1	.75
38.	08/03	CALL RETRN		HD	05:29PM	1	.75
39.	08/04	CALL RETRN		HD	01:43PM	1	.75
40.	08/04	CALL RETRN		HD	04:13PM	1	.75
41.	08/04	CALL RETRN		HD	11:12PM	1	.75
42.	08/06	CALL RETRN		HD	04:06PM	1	.75
43.	08/08	CALL RETRN		HD	03:12AM	1	.75
44.	08/09	CALL RETRN		HD	01:07PM	1	.75
45.	08/09	CALL RETRN		HD	11:41PM	1	.75
46.	08/10	CALL RETRN		HD	12:29PM	1	.75
47.	08/10	CALL RETRN		HD	02:39PM	1	.75
48.	08/11	CALL RETRN		HD	09:30AM	1	.75
49.	08/11	CALL RETRN		HD	01:11PM	1	.75
50.	08/12	CALL RETRN		HD	10:32AM	1	.75
51.	08/12	CALL RETRN		HD	11:50AM	1	.75
52.	08/12	CALL RETRN		HD	12:29PM	1	.75
53.	08/12	CALL RETRN		HD	09:35PM	1	.75
54.	08/13	CALL RETRN		HD	10:15AM	1	.75
55.	08/13	CALL RETRN		HD	11:05AM	1	.75

Total Direct Dialed Calls 22.50

Total Charges for 305 374-3131 ..... 22.50

The above total does not include the following taxes:

Federal Tax $0.68
State/Local Tax $3.41
Florida Gross Receipts Surcharge $0.23

305 374-3162

Direct Dialed Calls

	Date	Place Called	Number Called	Rate*	Time	Min	Amount
56.	07/22	CALL RETRN		HD	05:46PM	1	.75
57.	07/24	DELRAY BCH FL	561 276-7361	HD	02:20PM	0.8	.19
58.	07/24	DELRAY BCH FL	561 276-7361	HD	02:26PM	5.6	1.39
59.	07/24	CALL RETRN		HD	02:37PM	1	.75
60.	07/29	CALL RETRN		HD	03:41PM	1	.75
61.	07/30	CALL RETRN		HD	04:44PM	1	.75
62.	08/04	CALL RETRN		HD	08:50AM	1	.75
63.	08/08	CALL RETRN		HD	03:12AM	1	.75
64.	08/09	CALL RETRN		HD	01:08PM	1	.75
65.	08/09	CALL RETRN		HD	11:42PM	1	.75
66.	08/11	CALL RETRN		HD	09:31AM	1	.75
67.	08/11	CALL RETRN		HD	01:02PM	1	.75
68.	08/11	CALL RETRN		HD	02:42PM	1	.75
69.	08/11	BOYNTONBCH FL	561 737-2686	HD	02:42PM	0.9	.22

* Taxes and Rates Applied - See Back of First Page

(continued)▶

BELLSOUTH

ABA PROFSNL ASSOC
Account Number: 305 374-3131 617 0449
Bill Period Date: Aug 14, 1998

Detailed Statement of Charges

Optional Calling Services					*Amount*
Business Fax Service Summary (Questions call 1 800 986-9488)					
Fax Usage Charges for 305 374-0497					
305 374-0497					
	Fax Number	Total Pages	Page Allowance	Pages Billed	
Fax Overflow Service					
71.	305 631-3979	65	0	65	16.25
Total Business Fax Service Charges					16.25
Total Optional Calling Services					16.25

Taxes		*Amount*
Taxes on Regulated Services		
72.	Federal Tax	8.95
73.	State/Local Tax	22.42
74.	Florida Gross Receipts Surcharge	3.31
75.	City Tax	19.13
76.	Franchise Charge	6.90
Total Taxes on Regulated Services		60.71
Taxes on Unregulated Services		
77.	State/Local Tax ..... **	2.42
Total Taxes on Unregulated Services		2.42
Total Taxes		63.13

Total BellSouth Current Charges 402.17

** Unregulated Charge

BELLSOUTH

ABA PROFSNL ASSOC
Account Number: 305 374-3131 555 0443
Bill Period Date: Sep 14, 1998

Thank you for choosing BellSouth. We sincerely appreciate your business.

Summary of Charges

Previous Charges	*Amount*
Amount of Last Bill	.00
Less Payments	.00
Balance	.00
Current Charges	
Charges for BellSouth Companies	343.46
Charges for Other Companies	.00
Total Current Charges Due Before Oct 2	343.46
Total Amount Due	343.46

Important Notice(s)

Please note: This is your final bill. See message following the BellSouth Current Charges.

(continued on page 2) ▶

***** PLEASE FOLD, TEAR HERE AND RETURN THIS PORTION WITH YOUR PAYMENT. *****

Please make check payable to BellSouth in U.S. funds.

CURRENT CHARGES DUE BEFORE	PAST DUE AMOUNT	TOTAL AMOUNT DUE	AMOUNT PAID
Oct 2	$0.00	$343.46	

305 374-3131 555 0443
Sep 14, 1998
AV 1014 FXX B01 E011085

☐ **Check here if correspondence included.**

#011085

P.O. BOX 33009
CHARLOTTE NC
28243-0001

ABA PROFSNL ASSOC
801 BRICKELL BAY DR
SUIT 662
MIA FL 33131-2937

305937431315550449999812010891200000000000000000000034346

BELLSOUTH

ABA PROFSNL ASSOC
Account Number: 305 374-3131 555 0443
Bill Period Date: Sep 14, 1998

Helpful Numbers

BellSouth Telecommunications, Inc. (BST)

NOTE: Numbers for other companies are listed on their bill pages.

Billing Questions or to Place an Order:	
If calling from within the Florida BellSouth service area	1 800 945-6500
If calling from outside Florida or outside the Florida BellSouth service area	1 800 753-7289
Repair:	
If calling from within the Florida BellSouth service area	1 800 247-2020
Text Telephone (TTY) Users 7:00 AM - 7:00 PM (CST) Monday - Friday:	
If calling from within the Florida BellSouth service area	305 780-2274
If calling from outside Florida or outside the Florida BellSouth service area	1 800 251-5325

Detailed Statement of Charges

Local Usage — ***Amount***

Local Usage Summary for 305 374-3131

Local Measured Usage to the Expanded Area

Calls	Total Mins	Charges
12	23	1.86

1. Local Usage Summary 1.86

Local Usage Summary for 305 374-0497

Local Measured Usage to the Expanded Area

Calls	Total Mins	Charges
6	19	1.38

2. Local Usage Summary 1.38

Total Local Usage 3.24

AV E011085

(continued)▶

BELLSOUTH

ABA PROFSNL ASSOC
Account Number: 305 374-3131 555 0443
Bill Period Date: Sep 14, 1998

Detailed Statement of Charges

Other Charges and Credits (continued)		*Amount*
Work Completed On Aug 31, 1998 (continued)		
PON: DOLORES-NORTHERN TEL SO: CQHY7291 (continued)		
374-3131 (continued)		
Partial month's charge for service added (09/01/98 - 09/13/98)		
15. Message Waiting - Stutter Dialtone ($0.75/mo)		.32
16. Enhanced Caller ID with Anonymous Call Rejection ($15.99/mo)		6.93
17. Business Line ($29.10/mo)		12.61
Credit for adding (09/01/98 - 09/13/98)		
18. Multiple Feature credit for five features ($1.35/mo)		.58CREDIT
One-time charge for		
19. MemoryCall® Answering Service, Personal/Extension Mailbox	**	15.00
20. Charge for processing change in service		19.00
374-0497		
Partial month's credit for service removed (09/01/98 - 09/13/98)		
21. Business Line ($29.10/mo)		12.61CREDIT
Partial month's charge for service added (09/01/98 - 09/13/98)		
22. Fax Overflow Service ($12.95/mo)	**	5.61
23. Call Forwarding Busy Line ($3.25/mo)		1.41
24. Call Forwarding Don't Answer ($3.25/mo)		1.41
25. Remote Activation of Call Forwarding ($9.00/mo)		3.90
26. Enhanced Caller ID with Anonymous Call Rejection ($15.99/mo)		6.93
27. Business Line ($29.10/mo)		12.61
Credit for adding (09/01/98 - 09/13/98)		
28. Multiple Feature credit for four features ($0.90/mo)		.39CREDIT
One-time charge for		
29. Fax Overflow Service	**	15.00
Work Completed On Sep 4, 1998		
SO: DQMJQ997		
374-3131		
30. Adjustment to cover minimum charge for local service (08/30/98 - 09/13/98) ($82.08/mo)		41.02

** Unregulated Charge

AV E011085

(continued)▶

Detailed Statement of Charges

Itemized Calls (continued) — ***Amount***

305 374-3131 (continued)

Direct Dialed Calls (continued)

	Date	Place Called	Number Called	Rate*	Time	Min	Amount
53.	09/03	CALL RETRN		HD	05:22PM	1	.75
54.	09/03	CALL RETRN		HD	05:36PM	1	.75
55.	09/03	CALL RETRN		HD	08:48PM	1	.75
56.	09/03	CALL RETRN		HD	09:39PM	1	.75
57.	09/03	CALL RETRN		HD	11:08PM	1	.75
58.	09/04	CALL RETRN		HD	12:00AM	1	.75
59.	09/04	CALL RETRN		HD	10:55AM	1	.75
60.	09/04	CALL RETRN		HD	11:26AM	1	.75
61.	09/04	CALL RETRN		HD	12:04PM	1	.75

Total Direct Dialed Calls 22.50

Total Charges for 305 374-3131 ..... 22.50

The above total does not include the following taxes:

Federal Tax $0.68

State/Local Tax $3.41

Florida Gross Receipts Surcharge $0.23

Total Itemized Calls 22.50

Taxes — ***Amount***

Taxes on Regulated Services

62. Federal Tax 5.06
63. State/Local Tax 19.23
64. Florida Gross Receipts Surcharge 1.90
65. City Tax 10.65
66. Franchise Charge 3.73

Total Taxes on Regulated Services 40.57

Taxes on Unregulated Services

67. State/Local Tax ..... ** 3.22

Total Taxes on Unregulated Services 3.22

Total Taxes 43.79

* Taxes and Rates Applied - See Back of First Page

** Unregulated Charge

AV E011085

(continued)▶

BELLSOUTH

No Document Payment Receipt

RF-93-
(11-9

Area Code	Telephone Number	Customer Code	Check Digit
305	374 · 3131	555	

Billing Name: ABA PROFESSIONAL

Street Address: 1101 BRICKELL AVE

City: MIAMI FL. State: Zip Code: 33231

Please Check One

- [x] Payment $ 343.46
- [ ] Deposit $
- ID Type & Number
- [ ] Advance Payment $

Thank You ...

We Appreciate Your Business!

Your payment will be posted to your BellSouth account within seconds.

*In order to save time in the future, please bring your telephone bill.... or you may **Mail Your Payment**.*

SEARS ORL GB 2
16F PA P 0103 12/08/96 $343.46 CKM
PAYM 305-374-3131 555 0443

Ply 1 - Customer's Copy

Ply 2 - Agency's Copy

Summary of Charges

Previous Charges

Amount of Last Bill .....

Less Payments .....

Balance .....

Current Charges

Charges for BellSouth Companies .....

Charges for Other Companies .....

Total Current Charges Due Before Oct 2 .....

Total Amount Due .....

Important Notice(s)

Please note: This is your final bill. See message following the BellSouth Current Charges.

(continue

***** PLEASE FOLD, TEAR HERE AND RETURN THIS PORTION WITH YOUR PAY

Please make check payable to BellSouth in U.S. funds.

CURRENT CHARGES DUE BEFORE	PAST DUE AMOUNT	TOTAL AMOUNT DUE	AMOUNT PAID
Oct 2	$0.00	$343.46	

305 374-3131 55
Sep 14, 1998
AV 1014 FXX BC

☐ **Check here if correspondence included.**

#011085

P.O. BOX 33009
CHARLOTTE NC
28243-0001

ABA PROFSNL ASSOC
801 BRICKELL BAY DR
SUIT 662
MIA FL 33131-2

30593743131555044999981201089120000000000000000000

Other Charges and Credits (continued)

Work Completed On Aug 31, 1998 (continued)
PON: DOLORES-NORTHERN TEL SO: CQHY7291 (continued)
374-3131 (continued)
Partial month's charge for service added (09/01/98 - 09/13/98)
15. Message Waiting - Stutter Dialtone ($0.75/mo) .....
16. Enhanced Caller ID with Anonymous Call Rejection ($15.99/mo) .....
17. Business Line ($29.10/mo) .....
Credit for adding (09/01/98 - 09/13/98)
18. Multiple Feature credit for five features ($1.35/mo) .....
One-time charge for
19. MemoryCall® Answering Service, Personal/Extension Mailbox **
20. Charge for processing change in service .....
374-0497
Partial month's credit for service removed (09/01/98 - 09/13/98)
21. Business Line ($29.10/mo) .....
Partial month's charge for service added (09/01/98 - 09/13/98)
22. Fax Overflow Service ($12.95/mo) ..... **
23. Call Forwarding Busy Line ($3.25/mo) .....
24. Call Forwarding Don't Answer ($3.25/mo) .....
25. Remote Activation of Call Forwarding ($9.00/mo) .....
26. Enhanced Caller ID with Anonymous Call Rejection ($15.99/mo) .....
27. Business Line ($29.10/mo) .....
redit for adding (09/01/98 - 09/13/98)
28. Multiple Feature credit for four features ($0.90/mo) .....
ne-time charge for
29. Fax Overflow Service ..... **

ork Completed On Sep 4, 1998
O: DQMJQ997
74-3131
30. Adjustment to cover minimum charge for local service (08/30/98 - 09/13/98) ($82.08/mo) .....

* Unregulated Charge

temized Calls (continued)

305 374-3131 (continued)

irect Dialed Calls (continued)

	Date	Place Called	Number Called	Rate*	Time	Min
53.	09/03	CALL RETRN		HD	05:22PM	1
54.	09/03	CALL RETRN		HD	05:36PM	1
55.	09/03	CALL RETRN		HD	08:48PM	1
56.	09/03	CALL RETRN		HD	09:39PM	1
57.	09/03	CALL RETRN		HD	11:08PM	1
58.	09/04	CALL RETRN		HD	12:00AM	1
59.	09/04	CALL RETRN		HD	10:55AM	1
60.	09/04	CALL RETRN		HD	11:26AM	1
61.	09/04	CALL RETRN		HD	12:04PM	1

otal Direct Dialed Calls .....

otal Charges for 305 374-3131 .....

he above total does not include the following taxes:

Federal Tax $0.68

State/Local Tax $3.41

Florida Gross Receipts Surcharge $0.23

otal Itemized Calls .....

xes

xes on Regulated Services

62. Federal Tax .....
63. State/Local Tax .....
64. Florida Gross Receipts Surcharge .....
65. City Tax .....
66. Franchise Charge .....

tal Taxes on Regulated Services .....

xes on Unregulated Services

67. State/Local Tax ..... **

tal Taxes on Unregulated Services .....

tal Taxes .....

Taxes and Rates Applied - See Back of First Page

Unregulated Charge

AV E011085 (cc

AT&T

ABA PROFSNL ASSOC
Account Number: 305 374-3131 710 0441
Bill Period Date: Jan 14, 1999

For AT&T Billing Questions, Call 1 800 325-0138

Detailed Statement of Charges

Itemized Calls (continued) — *Amount*

305 374-0838 (continued)

Direct Dialed Calls (continued)

	Date	Place Called	Number Called	Rate*	Time	Min	Amount
26.	12/30	SKOKIE IL	847 677-0809	BD	04:32PM	1	.37
27.	01/07	WINTERPARK FL	407 875-8032	HD	01:44PM	5	.80
28.	01/07	NORTHPORT NY	516 261-8800	BD	02:00PM	7	2.55

Total Direct Dialed Calls 67.03

Total Charges for 305 374-0838 ..... 67.03

The above total does not include the following taxes:

Federal Tax $2.06
State/Local Tax $5.37
Florida Gross Receipts Surcharge $1.71

305 374-3162

Direct Dialed Calls

	Date	Place Called	Number Called	Rate*	Time	Min	Amount
29.	12/22	JERSEYCITY NJ	201 418-0190	BD	10:34AM	1	.37
30.	12/22	WASHINGTON DC	202 418-0190	BD	10:35AM	12	4.37
31.	12/22	ATLANTA GA	404 656-2817	BD	11:56AM	2	.73
32.	12/22	ATLANTA GA	404 730-7720	BD	11:58AM	3	1.10
33.	12/22	ATLANTA GA	404 330-6213	BD	12:02PM	4	1.46
34.	12/23	NASSAU BA	242 328-3176	BR	03:00PM	4	5.40
35.	12/23	NASSAU BA	242 323-8448	BR	03:04PM	4	5.40
36.	12/29	MONTREAL PQ	514 868-8800	BR	04:59PM	3	2.79

Total Direct Dialed Calls 21.62

Total Charges for 305 374-3162 ..... 21.62

The above total does not include the following taxes:

Federal Tax $0.67
State/Local Tax $1.59
Florida Gross Receipts Surcharge $0.55

Total Itemized Calls 94.43

Taxes — *Amount*

Taxes on Regulated Services

37.	Federal Tax	2.90
38.	State Tax	6.93
39.	Florida Gross Receipts Surcharge	2.40
40.	City Tax	.48

Total Taxes on Regulated Services 12.71

Total Taxes 12.71

Total AT&T Current Charges 107.14

* Taxes and Rates Applied - See Back of First Page

AT&T

ABA PROFSNL ASSOC
Account Number: 305 374-3131 710 0441
Bill Period Date: Jan 14, 1999

For AT&T Billing Questions, Call 1 800 325-0138

Detailed Statement of Charges

Itemized Calls — *Amount*

305 374-3131

Direct Dialed Calls

	Date	Place Called	Number Called	Rate*	Time	Min	Amount
1.	12/21	VENEZUELA	058 818-1920	BR	01:56PM	1	1.79
2.	12/21	VENEZUELA	058 814-1398	BR	01:57PM	1	1.79
3.	01/03	MEMPHIS TN	901 759-9129	BN	02:00PM	1	.37
4.	01/03	MEMPHIS TN	901 759-9129	BN	02:00PM	1	.37

Total Direct Dialed Calls 4.32

Total Charges for 305 374-3131 ..... 4.32

The above total does not include the following taxes:

Federal Tax $0.13
State/Local Tax $0.33
Florida Gross Receipts Surcharge $0.11

305 374-0497

Direct Dialed Calls

	Date	Place Called	Number Called	Rate*	Time	Min	Amount
5.	01/06	BRENTWOOD NY	516 231-4099	BD	06:12PM	2	.73
6.	01/06	WASHINGTON DC	202 418-0710	BD	06:19PM	2	.73

Total Direct Dialed Calls 1.46

Total Charges for 305 374-0497 ..... 1.46

The above total does not include the following taxes:

Federal Tax $0.04
State/Local Tax $0.12
Florida Gross Receipts Surcharge $0.03

305 374-0838

Direct Dialed Calls

	Date	Place Called	Number Called	Rate*	Time	Min	Amount
7.	12/21	TALLAHASSE FL	850 410-9500	HD	11:39AM	7	1.13
8.	12/21	HAINESCITY FL	941 420-0192	HD	02:55PM	31	4.82
9.	12/23	WASHINGTON DC	202 418-0190	BD	11:08AM	1	.37
10.	12/23	WASHINGTON DC	202 418-0190	BD	12:29PM	3	1.10
11.	12/23	NEWPROVDNC BA	242 356-7411	BR	02:58PM	1	1.35
12.	12/25	CUBA	053 722-3571	BR	02:04PM	6	15.84
13.	12/26	SOLONDODRY VT	802 824-3892	BN	09:09PM	9	3.28
14.	12/28	NEWPROVDNC BA	242 377-3261	BR	03:23PM	7	9.45
15.	12/29	NEWPROVDNC BA	242 377-3261	BR	02:06PM	2	2.70
16.	12/29	NEWPROVDNC BA	242 377-3261	BR	02:07PM	1	1.35
17.	12/29	NEWPROVDNC BA	242 377-2055	BR	02:08PM	3	4.05
18.	12/29	ARLINGTON VA	703 816-8000	BD	03:47PM	3	1.10
19.	12/29	ARLINGTON VA	703 816-8000	BD	04:05PM	3	1.10
20.	12/29	ARLINGTON VA	703 816-8000	BD	04:07PM	26	9.46
21.	12/29	SAN RAFAEL CA	415 491-1421	BD	04:58PM	3	1.10
22.	12/29	BESSEMER MI	906 663-4785	BD	05:29PM	1	.37
23.	12/29	BESSEMER MI	906 663-4785	BD	06:02PM	2	.73
24.	12/29	SAN RAFAEL CA	415 491-1421	BD	06:18PM	1	.37
25.	12/30	QUEENS NY	718 793-3737	BD	12:19PM	10	3.64

* Taxes and Rates Applied - See Back of First Page

(continued)▶

Detailed Statement of Charges

Other Charges and Credits (continued)

	Amount
Work Completed On Jan 14, 1999	
SO: MIA MANHOLE	
374-3131	
114. Cost of Dade County manhole ordinance #83-3	.11
374-0497	
115. Cost of Dade County manhole ordinance #83-3	.11
374-0838	
116. Cost of Dade County manhole ordinance #83-3	.11
374-3162	
117. Cost of Dade County manhole ordinance #83-3	.11
374-6404	
118. Cost of Dade County manhole ordinance #83-3	.11
374-7264	
119. Cost of Dade County manhole ordinance #83-3	.11
Total Other Charges and Credits	354.82

Taxes

	Amount
Taxes on Regulated Services	
120. Federal Tax	20.71
121. State/Local Tax	57.34
122. Florida Gross Receipts Surcharge	8.07
123. City Tax	42.45
124. Franchise Charge	17.47
Total Taxes on Regulated Services	146.04
Taxes on Unregulated Services	
125. State/Local Tax ..... **	.97
Total Taxes on Unregulated Services	.97
Total Taxes	147.01

Total BellSouth Current Charges 909.90

Messages

On May 16, 1997, the FCC ordered reductions in access charges BellSouth assesses long distance companies. These charges help recover the costs of the telephone lines from BellSouth's switching offices to our customers' premises. The FCC's order was designed to promote competition in the telecommunications industry while lowering long distance rates. To offset the reduction in access charges, BellSouth was authorized to increase federal Subscriber Line Charges for multiline business and Primary Rate ISDN customers. These changes in access charges were initially implemented on July 1, 1997. The next rate increase will be effective January 1, 1999, and will be reflected on January/February 1999 bills.

** Unregulated Charge

BELLSOUTH

ABA PROFSNL ASSOC
Account Number: 305 374-3131 710 0441
Bill Period Date: Jan 14, 1999

Detailed Statement of Charges

Other Charges and Credits (continued)	*Amount*
Work Completed On Dec 18, 1998 (continued)	
PON: MANNY LORA SO: NQR8N566 (continued)	
374-0416 (continued)	
Charge for new service (12/19/98 - 01/13/99)	
73. Call Return (*69) ($5.00/mo)	4.33
74. Enhanced Caller ID with Anonymous Call Rejection ($15.99/mo)	13.86
75. Business Line ($29.10/mo)	25.22
Charges (12/19/98 - 01/13/99)	
76. FCC Charge for Network Access ($8.14/mo)	7.05
Your Local Toll company for 374-0416 is BellSouth Telecomm. Inc.	
Credit for adding (12/19/98 - 01/13/99)	
77. Multiple Feature credit for five features ($1.35/mo)	1.17CREDIT
374-0626	
Your InterLATA Long Distance Company for 374-0626 is AT&T	
Charge for new service (12/19/98 - 01/13/99)	
78. Three-Way Calling ($4.00/mo)	3.47
79. Call Waiting ($5.80/mo)	5.03
80. Remote Activation of Call Forwarding ($9.00/mo)	7.80
81. Call Return (*69) ($5.00/mo)	4.33
82. Enhanced Caller ID with Anonymous Call Rejection ($15.99/mo)	13.86
83. Business Line ($29.10/mo)	25.22
Charges (12/19/98 - 01/13/99)	
84. FCC Charge for Network Access ($8.14/mo)	7.05
Your Local Toll company for 374-0626 is BellSouth Telecomm. Inc.	
Credit for adding (12/19/98 - 01/13/99)	
85. Multiple Feature credit for five features ($1.35/mo)	1.17CREDIT
374-6726	
Your InterLATA Long Distance Company for 374-6726 is AT&T	
Charge for new service (12/19/98 - 01/13/99)	
86. Three-Way Calling ($4.00/mo)	3.47
87. Call Waiting ($5.80/mo)	5.03
88. Remote Activation of Call Forwarding ($9.00/mo)	7.80
89. Call Return (*69) ($5.00/mo)	4.33
90. Enhanced Caller ID with Anonymous Call Rejection ($15.99/mo)	13.86
91. Business Line ($29.10/mo)	25.22
Charges (12/19/98 - 01/13/99)	
92. FCC Charge for Network Access ($8.14/mo)	7.05
Your Local Toll company for 374-6726 is BellSouth Telecomm. Inc.	
Credit for adding (12/19/98 - 01/13/99)	
93. Multiple Feature credit for five features ($1.35/mo)	1.17CREDIT
Work Completed On Dec 22, 1998	
PON: MANNY LORA SO: CQ3W44G3	
374-3131	
Partial month's credit for service removed (12/23/98 - 01/13/99)	
94. Flexible Call Forwarding with Audio Calling Name ($11.00/mo)	8.07CREDIT

(continued)▶

BELLSOUTH

ABA PROFSNL ASSOC
Account Number: 305 374-3131 710 0441
Bill Period Date: Jan 14, 1999

Detailed Statement of Charges

Local Usage (continued)

Amount

Local Usage Summary for 305 374-6404

Local Measured Usage to the Expanded Area

Calls	Total Mins	Charges
8	60	3.92

18. Local Usage Summary 3.92

Total Local Usage 13.00

Other Charges and Credits

Amount

Work Completed On Dec 18, 1998
PON: MANNY LORA SO: CQPPH715
Previous Number 374-0416
Partial month's credit for service removed (12/19/98 - 01/13/99)

19. Three-Way Calling ($4.00/mo) 3.47CREDIT
20. Call Waiting ($5.80/mo) 5.03CREDIT
21. Remote Activation of Call Forwarding ($9.00/mo) 7.80CREDIT
22. Call Return (*69) ($5.00/mo) 4.33CREDIT
23. Enhanced Caller ID with Anonymous Call Rejection ($15.99/mo) 13.86CREDIT
24. Business Line ($29.10/mo) 25.22CREDIT

Credit (12/19/98 - 01/13/99)

25. FCC Charge for Network Access ($8.14/mo) 7.05CREDIT

Charge for removing (12/19/98 - 01/13/99)

26. Multiple Feature credit for five features ($1.35/mo) 1.17

Partial month's credit for service removed (12/19/98 - 01/13/99)

27. Three-Way Calling ($4.00/mo) 3.47CREDIT
28. Call Waiting ($5.80/mo) 5.03CREDIT
29. Remote Activation of Call Forwarding ($9.00/mo) 7.80CREDIT
30. Call Return (*69) ($5.00/mo) 4.33CREDIT
31. Enhanced Caller ID with Anonymous Call Rejection ($15.99/mo) 13.86CREDIT
32. Business Line ($29.10/mo) 25.22CREDIT

Credit (12/19/98 - 01/13/99)

33. FCC Charge for Network Access ($8.14/mo) 7.05CREDIT

Charge for removing (12/19/98 - 01/13/99)

34. Multiple Feature credit for five features ($1.35/mo) 1.17

Partial month's charge for service added (12/19/98 - 01/13/99)

35. Three-Way Calling ($4.00/mo) 3.47
36. Call Waiting ($5.80/mo) 5.03
37. Remote Activation of Call Forwarding ($9.00/mo) 7.80
38. Call Return (*69) ($5.00/mo) 4.33
39. Enhanced Caller ID with Anonymous Call Rejection ($15.99/mo) 13.86
40. Business Line ($29.10/mo) 25.22

Charges (12/19/98 - 01/13/99)

41. FCC Charge for Network Access ($8.14/mo) 7.05

Credit for adding (12/19/98 - 01/13/99)

42. Multiple Feature credit for five features ($1.35/mo) 1.17CREDIT

Partial month's charge for service added (12/19/98 - 01/13/99)

43. Three-Way Calling ($4.00/mo) 3.47

(continued)▶

CORRESPONDENCE

Correspondence included with your payment takes longer to reach our Service Centers. For a faster response, please call us at the number shown in the "BellSouth Helpful Numbers" section of this bill.

WHEN TO PAY YOUR BILL

Your payment is due when you receive your bill. If we do not receive payment for your local and long distance charges by the "Due Before" date, your account will become past due.

If we disconnect your service for non-payment, you must pay the past due amount and a charge to reconnect your service. You may also be required to pay a deposit.

HOW TO PAY YOUR BILL

You can mail your payment or pay at one of our Authorized Payment Agencies. You may also use our Automatic Funds Transfer Plan.

When mailing your payment, write the amount paid in the box on the remittance stub. Also, write your area code and telephone number on your check. Place your check and remittance stub in the return envelope or a standard envelope and mail it to the location below:

BellSouth
P. O. Box 70807
Charlotte, NC 28272-0807

TAX CODES FOR CALLS

A - Federal Only
B - Federal and State
G - State Only
H - Federal, State and Local
I - State and Local
J - Local Only
K - Federal and Local

RATE CODES FOR CALLS

D - Day
E - Evening
N - Night/Weekend
R* - Standard
T* - Discount
Y* - Economy
*Overseas only
C - Calling Card
S - Station
P - Person
X - Conference
F - Call Forward
M - Multiple Rate Periods

ADDITIONAL INFORMATION

Additional information regarding your telephone service can be found in the Front Pages of your telephone directory.

CISCO, Inc.

FAX TRANSMITTAL COVER SHEET

DATE: 08-19-99
CONTACT
NAME: MANUEL LORA
TO: ABA PROFESSIONAL ASSOCIATION
MANUEL LORA
FAX #: 305-374-0497

FROM: CHARLOTTE JOHNSON , EXT. 3324
COMPANY: CISCO, INC.
PHONE: 713-461-9407 800-994-9408
FAX: 713-461-2432

OF PAGES: 1

RE: DEBTOR # 9904780 ABA PROFESSIONAL ASSOCIATION POLICY #

PER OUR CONVERSATION ON AUGUST 18,99
YOU AGREED TO PAYMENT ARRANGEMENT OF
$50.00 ON AUGUST 25TH, & $250.00 ON
SEPTEMBER 25TH, THEN FINAL PAYMENT OF $881.72
ON OCTOBER 25, 99 PLEASE REMITT ALL PAYMENTS
ON TIME TO AVOID TERMINATION OF ARRANGEMENTS.
IF YOU HAVE ANY QUESTIONS PLEASE GIVE ME A CALL.

IMPORTANT: Please call 800-994-9408 or 713-461-9408.
Press EXT. 3309 to reach adjuster handling this file.
Please refer to this number - 9904780

Cisco, Inc. 1702 Townhurst Dr. Houston, Tx 77043 (800)231-3686

BELLSOUTH

ABA PROFSNL ASSOC
Account Number: 305 374-0497 618 0441
Bill Period Date: Sep 14, 1998

Helpful Numbers (continued)

BellSouth Telecommunications, Inc. (BST)

NOTE: Numbers for other companies are listed on their bill pages.

Repair:
If calling from within the Florida BellSouth service area 305 780-2222
Text Telephone (TTY) Users 7:00 AM - 7:00 PM (CST) Monday - Friday:
If calling from within the Florida BellSouth service area 305 780-2274
If calling from outside Florida or outside the Florida BellSouth service area 1 800 251-5325

Detailed Statement of Charges

Local Usage — *Amount*

Local Usage Summary for 305 374-0497
Local Measured Usage to the Expanded Area

Calls	Total Mins	Charges
13	24	1.96

1. Local Usage Summary 1.96

Local Usage Summary for 305 374-3131
Local Measured Usage to the Expanded Area

Calls	Total Mins	Charges
49	140	10.36

2. Local Usage Summary 10.36

Local Usage Summary for 305 374-0497
Local Measured Usage to the Expanded Area

Calls	Total Mins	Charges
9	16	1.32

3. Local Usage Summary 1.32

Local Usage Summary for 305 374-3162
Local Measured Usage to the Expanded Area

Calls	Total Mins	Charges
21	89	6.18

4. Local Usage Summary 6.18
Total Local Usage 19.82

Other Charges and Credits — *Amount*

5. Late Payment Charge (1.5% of Unpaid Regulated Balance) 16.31
6. Late Payment Charge (1.5% of Unpaid Unregulated Balance) ** 1.78

Work Completed On Aug 27, 1998
PON: DOLORES-NORTHN TEL SO: CQTOB530
374-0497
7. Charge for service changed - first line 38.00
374-3131
Partial month's credit for service removed (08/28/98 - 09/13/98)
8. ESC Three-Way Calling ($4.00/mo) 2.27CREDIT

** Unregulated Charge

(continued)▶

BELLSOUTH

ABA PROFSNL ASSOC
Account Number: 305 374-0497 618 0441
Bill Period Date: Sep 14, 1998

Detailed Statement of Charges

Itemized Calls — *Amount*

305 374-3131

Direct Dialed Calls

	Date	Place Called	Number Called	Rate*	Time	Min	Amount
29.	08/14	CALL RETRN		HD	07:05AM	1	.75
30.	08/14	CALL RETRN		HD	07:08PM	1	.75
31.	08/15	CALL RETRN		HD	10:34AM	1	.75
32.	08/15	CALL RETRN		HD	02:41PM	1	.75
33.	08/15	CALL RETRN		HD	09:52PM	1	.75
34.	08/15	CALL RETRN		HD	10:02PM	1	.75
35.	08/16	CALL RETRN		HD	07:51AM	1	.75
36.	08/16	CALL RETRN		HD	08:44AM	1	.75
37.	08/17	CALL RETRN		HD	01:59AM	1	.75
38.	08/17	CALL RETRN		HD	07:33AM	1	.75
39.	08/17	FORTPIERCE FL	561 461-9579	HD	07:34AM	0.5	.12
40.	08/17	CALL RETRN		HD	08:33AM	1	.75
41.	08/17	FORTPIERCE FL	561 461-9579	HD	08:33AM	2.9	.72
42.	08/17	CALL RETRN		HD	08:36AM	1	.75
43.	08/17	FORTPIERCE FL	561 461-9579	HD	08:37AM	0.9	.22
44.	08/17	CALL RETRN		HD	10:05PM	1	.75
45.	08/18	CALL RETRN		HD	01:02PM	1	.75
46.	08/18	CALL RETRN		HD	04:29PM	1	.75
47.	08/19	CALL RETRN		HD	07:43AM	1	.75
48.	08/19	CALL RETRN		HD	08:23AM	1	.75
49.	08/19	CALL RETRN		HD	12:11PM	1	.75
50.	08/20	CALL RETRN		HD	03:42AM	1	.75
51.	08/20	CALL RETRN		HD	09:22AM	1	.75
52.	08/20	CALL RETRN		HD	04:51PM	1	.75
53.	08/24	CALL RETRN		HD	08:48AM	1	.75
54.	08/25	CALL RETRN		HD	08:16AM	1	.75
55.	08/25	CALL RETRN		HD	12:10PM	1	.75
56.	08/25	CALL RETRN		HD	01:49PM	1	.75
57.	08/25	CALL RETRN		HD	05:17PM	1	.75
58.	08/26	CALL RETRN		HD	11:03PM	1	.75
59.	08/27	CALL RETRN		HD	04:05PM	1	.75
60.	08/27	CALL RETRN		HD	04:37PM	1	.75

Total Direct Dialed Calls 22.81

Total Charges for 305 374-3131 ..... 22.81

We never used a per item service calling plan rate

The above total does not include the following taxes:

Federal Tax $0.69
State/Local Tax $3.46
Florida Gross Receipts Surcharge $0.23

305 374-3162

Direct Dialed Calls

	Date	Place Called	Number Called	Rate*	Time	Min	Amount
61.	08/15	CALL RETRN		HD	09:52PM	1	.75
62.	08/17	CALL RETRN		HD	01:43PM	1	.75
63.	08/17	CALL RETRN		HD	01:44PM	1	.75
64.	08/18	CALL RETRN		HD	01:01PM	1	.75

* Taxes and Rates Applied - See Back of First Page

BELLSOUTH

ABA PROFSNL ASSOC
Account Number: 305 374-0497 618 0441
Bill Period Date: Sep 14, 1998

Thank you for choosing BellSouth. We sincerely appreciate your business.

Summary of Charges

	Amount
Previous Charges	
Amount of Last Bill	.00
Less Payments	.00
Adjustments	1,206.13
Balance	1,206.13
Current Charges	
BellSouth	
Local Usage	19.82
Other Charges and Credits	75.07CREDIT
Itemized Calls	32.56
Optional Calling Services	9.75
Taxes	11.95CREDIT
Total Current Charges for BellSouth Companies	24.89CREDIT
Charges for Other Companies	59.90
Total Current Charges Due Before Oct 2	35.01
Total Amount Due	1,241.14

Important Notice(s)

Please note: This is your final bill. See message following the BellSouth Current Charges.

Helpful Numbers

BellSouth Telecommunications, Inc. (BST)

NOTE: Numbers for other companies are listed on their bill pages.

Billing Questions or to Place an Order:	
If calling from within the Florida BellSouth service area	305 780-2800
If calling from outside Florida or outside the Florida BellSouth service area	1-800-753-8172

(continued on page 2) ▶

***** PLEASE FOLD, TEAR HERE AND RETURN THIS PORTION WITH YOUR PAYMENT. *****

Please make check payable to BellSouth in U.S. funds.

CURRENT CHARGES DUE BEFORE	PAST DUE AMOUNT	TOTAL AMOUNT DUE	AMOUNT YOU PAID
Oct 2	$1,206.13	$1,241.14	

305 374-0497 618 0441
Sep 14, 1998
AV 1014 FXX B01 A000730

☐ **Check here if correspondence included.**

#000730 2 AV 0.46

P.O. BOX 70807
CHARLOTTE NC
28272-0807

ABA PROFSNL ASSOC
801 BRICKELL BAY DR
APT 662
MIA FL 33131-2937

305937404976180449999812010920200000000000120613000012411 4

BELLSOUTH

ABA PROFSNL ASSOC
Account Number: 305 374-0497 618 0441
Bill Period Date: Sep 14, 1998

Detailed Statement of Charges

Optional Calling Services

Amount

Business Fax Service Summary (Questions call 1 800 986-9488)
Fax Usage Charges for 305 374-0497
305 374-0497

Fax Number	Total Pages	Page Allowance	Pages Billed	Amount
Fax Overflow Service				
74. 305 631-3979	39	0	39	9.75
Total Business Fax Service Charges				9.75
Total Optional Calling Services				9.75

Taxes

Amount

Taxes on Regulated Services

75. Federal Tax		2.13CREDIT
76. State/Local Tax		2.22CREDIT
77. Florida Gross Receipts Surcharge		.91CREDIT
78. City Tax		3.99CREDIT
79. Franchise Charge		2.59CREDIT
Total Taxes on Regulated Services		11.84CREDIT

Taxes on Unregulated Services

80. State/Local Tax	**	.11CREDIT
Total Taxes on Unregulated Services		.11CREDIT
Total Taxes		11.95CREDIT

Total BellSouth Current Charges 24.69CREDIT

Messages

This bill represents charges for your former telephone service. If you cannot make payment in full, please call 305 780-2800 before Oct 2 and we will try to establish a payment arrangement which meets your individual needs. Calling cards for this account are now void and should be destroyed.

We appreciate the excellent manner in which you have paid your account. We hope to have the opportunity to serve you again in the future.

Detail of Adjustments

Listed below is a summary of the Adjustments, found on page 1 of the bill.
These adjustments are shown by date and the company making the adjustment.

Date Adjusted	Company	Adjustment
81. Sep 1, 1998	BELLSOUTH TELECOMMUNICATIONS	1,206.13
Total Adjustments		1,206.13

** Unregulated Charge

BELLSOUTH

ABA PROFSNL ASSOC
Account Number: 305 374-0497 618 0441
Date: Oct 6, 1998

****
* SEE IMPORTANT NOTICE ENCLOSED *
****

***** PLEASE FOLD, TEAR HERE AND RETURN THIS PORTION WITH YOUR PAYMENT. *****

Please make check payable to BellSouth in U.S. funds.

TOTAL AMOUNT DUE	AMOUNT PAID
$1,241.14	

305 374-0497 618 0441
Oct 6, 1998
NT B01 E011327

☐ Check here if correspondence included.

#011327

P.O. BOX 33009
CHARLOTTE NC
28243-0001

ABA PROFSNL ASSOC
801 BRICKELL BAY DR
APT 662
MIA FL 33131-2937

30593740497618044999990201091030000000000012411400001241 14

BELLSOUTH

ABA PROFSNL ASSOC
Account Number: 305 374-0497 618 0441
Date: Oct 6, 1998

INQUIRIES CALL 305 780-2187

IMPORTANT NOTICE

Para Preguntas en Español: 780-2198

We recently sent you a final bill for your former telephone service. Our records indicate that $1241.14 is past due and payment has not yet been received.

Please send us your payment today or call so that we can make arrangements for payment which are convenient for you.

If your payment is already on the way, please accept our thanks.

NT E011327

BELLSOUTH

ABA PROFSNL ASSOC
Account Number: 305 374-0497 618 0441
Bill Period Date: Oct 14, 1998

Thank you for choosing BellSouth. We sincerely appreciate your business.

Summary of Charges

	Amount
Previous Charges	
Amount of Last Bill	1,241.14
Less Payments	.00
Balance	1,241.14
Current Charges	
BellSouth	
Optional Calling Services	.50
Taxes	.04
Total Current Charges for BellSouth Companies	.54
Total Current Charges Due Before Nov 5	.54
Total Amount Due	1,241.68

Important Notice(s)

Please note: This is your revised final bill. See message following the BellSouth Current Charges.

Helpful Numbers

BellSouth Telecommunications, Inc. (BST)
NOTE: Numbers for other companies are listed on their bill pages.

Billing Questions or to Place an Order:	
If calling from within the Florida BellSouth service area	305 780-2800
If calling from outside Florida or outside the Florida BellSouth service area	1-800-753-8172
Repair:	
If calling from within the Florida BellSouth service area	305 780-2222

(continued on page 2) ▶

***** PLEASE FOLD, TEAR HERE AND RETURN THIS PORTION WITH YOUR PAYMENT. *****

Please make check payable to BellSouth in U.S. funds.

CURRENT CHARGES DUE BEFORE	PAST DUE AMOUNT	TOTAL AMOUNT DUE	AMOUNT PAID
Nov 5	$1,241.14	$1,241.68	

305 374-0497 618 0441
Oct 14, 1998
AV FXX B01 A000732

☐ **Check here if correspondence included.**

#000732 1 AV 0.23

P.O. BOX 70807
CHARLOTTE NC
28272-0807

ABA PROFSNL ASSOC
801 BRICKELL BAY DR
APT 662
MIA FL 33131-2937

305937404976180449999812010920200000000000124114000012416 8

BELLSOUTH

ABA PROFSNL ASSOC
Account Number: 305 374-0497 618 0441
Bill Period Date: Oct 14, 1998

Detailed Statement of Charges

Optional Calling Services — *Amount*

Business Fax Service Summary (Questions call 1 800 986-9488)
Fax Usage Charges for 305 374-0497
305 374-0497

Fax Number	Total Pages	Page Allowance	Pages Billed	Amount
Fax Overflow Service				
1. 305 631-3979	2	0	2	.50
Total Business Fax Service Charges				.50
Total Optional Calling Services				.50

Taxes — *Amount*

Taxes on Unregulated Services

2. State Tax	**	.04
Total Taxes on Unregulated Services		.04
Total Taxes		.04

Total BellSouth® Connect Charges [illegible]

Messages

This revised final bill for telephone service includes charges not previously billed to your account. Since charges from your initial final bill were not paid by the past due date your account was previously referred to a collection agency. The collection agency has been notified of these additional charges. Calling cards for this account are now void and should be destroyed.

BellSouth® BusyConnect℠ service has been available to you since June 30, 1998. BusyConnect service can automatically call busy numbers for you - while you do other things. You will be able to use it whenever you need it and will be billed seventy-five cents for each use whether or not you reach the person you are calling. Subscribers to Repeat Dialing will not be billed additionally. If you don't want access to BusyConnect service, blocking is available free of charge. Call us at 1 888 655-2772 to request feature blocking.

** Unregulated Charge

BELLSOUTH

ABA PROFSNL ASSOC
Account Number: 305 374-0497 618 0441
Date: Dec 24, 1998

****
* SEE IMPORTANT NOTICE ENCLOSED *
****

***** PLEASE FOLD, TEAR HERE AND RETURN THIS PORTION WITH YOUR PAYMENT. *****

Please make check payable to BellSouth in U.S. funds.

TOTAL AMOUNT DUE	AMOUNT PAID
$1,241.68	

305 374-0497 618 0441
Dec 24, 1998
MT B01 E000806

☐ **Check here if correspondence included.**

#000806

P.O. BOX 33009
CHARLOTTE NC
28243-0001

ABA PROFSNL ASSOC
801 BRICKELL BAY DR
SUITE 662
MIA FL 33131-2937

305937404976180449999902010910300000000000124168000012416 8

BELLSOUTH

ABA PROFSNL ASSOC
Account Number: 305 374-0497 361 0442
Bill Period Date: Jan 14, 1999

Detailed Statement of Charges

Local Usage — Amount

Local Usage Summary for 305 374-0497
ISDN Usage Summary

Calls	Total Mins	Cost/Min	Charges
0	0	.010	.00

1. Local Usage Summary ..... .00

Local Usage Summary for 305 374-0838
ISDN Usage Summary

Calls	Total Mins	Cost/Min	Charges
494	978	.010	9.78
	Usage Allowance		76.80CREDIT

2. Local Usage Summary ..... .00

Local Usage Summary for 305 374-0838
Local Measured Usage to the Expanded Area

Calls	Total Mins	Charges
4	55	3.46

3. Local Usage Summary 3.46

Local Usage Summary for 305 374-7246
Local Measured Usage to the Expanded Area

Calls	Total Mins	Charges
18	54	3.96

4. Local Usage Summary 3.96

Total Local Usage 7.42

Other Charges and Credits — Amount

5. Late Payment Charge (1.5% of Unpaid Regulated Balance) 25.44
6. Late Payment Charge (1.5% of Unpaid Unregulated Balance) ** 3.29

Work Completed On Dec 18, 1998
PON: MANNY LORA SO: CQPTK136
374-0497
Circuit Number: 70.IBSD.512986..SB
Partial month's credit for service removed (12/19/98 - 01/13/99)

7. 2 ISDN B Channel Threshold Voice/Data ($32.50/mo) 28.17CREDIT
8. ISDN Threshold Pricing, Basic Rate DSL Access Arrangement, Business ($55.00/mo) 47.67CREDIT
9. FCC Charge for Excess Line Port for Basic Rate ISDN Digital Subscriber Line ($2.44/mo) 2.11CREDIT

Credit (12/19/98 - 01/13/99)

10. FCC Charge for Network Access ($5.00/mo) 4.33CREDIT

374-0838
Partial month's credit for service removed (12/19/98 - 01/13/99)

11. Call Fwd Busy Line per User for Voice or Voice/Data (ISDN) ($2.50/mo) 2.17CREDIT
12. Call Fwd Don't Answer per User for Voice or Voice/Data ($2.50/mo) 2.17CREDIT

** Unregulated Charge

BELLSOUTH

ABA PROFSNL ASSOC
Account Number: 305 374-0497 361 0442
Bill Period Date: Jan 14, 1999

Detailed Statement of Charges

Taxes (continued)		*Amount*
Taxes on Regulated Services (continued)		
26. State/Local Tax		15.73CREDIT
27. Florida Gross Receipts Surcharge		2.25CREDIT
28. City Tax		13.94CREDIT
29. Franchise Charge		5.78CREDIT
Total Taxes on Regulated Services		44.01CREDIT
Taxes on Unregulated Services		
30. State/Local Tax	**	.45CREDIT
Total Taxes on Unregulated Services		.45CREDIT
Total Taxes		44.46CREDIT
Total BellSouth Current Charges		**224.96CREDIT**

Messages

This bill represents charges for your former telephone service. If you cannot make payment in full, please call 1 800 858-9413 before Feb 1 and we will try to establish a payment arrangement which meets your individual needs. Calling cards for this account are now void and should be destroyed.

Detail of Adjustments

Listed below is a summary of the Adjustments, found on page 1 of the bill. These adjustments are shown by date and the company making the adjustment.

	Date Adjusted	*Company*	*Adjustment*
31.	Dec 17, 1998	BELLSOUTH TELECOMMUNICATIONS	62.48CREDIT
32.	Dec 17, 1998	BELLSOUTH TELECOMMUNICATIONS	276.64CREDIT
33.	Dec 17, 1998	BELLSOUTH TELECOMMUNICATIONS	23.11CREDIT
34.	Dec 17, 1998	BELLSOUTH TELECOMMUNICATIONS	591.93CREDIT
35.	Dec 17, 1998	BELLSOUTH TELECOMMUNICATIONS	40.52CREDIT
36.	Dec 28, 1998	BELLSOUTH TELECOMMUNICATIONS	39.93
37.	Dec 28, 1998	BELLSOUTH TELECOMMUNICATIONS	3,209.94
38.	Dec 29, 1998	BELLSOUTH TELECOMMUNICATIONS	144.76CREDIT
39.	Jan 11, 1999	BELLSOUTH TELECOMMUNICATIONS	62.48CREDIT
40.	Jan 11, 1999	BELLSOUTH TELECOMMUNICATIONS	276.64CREDIT
41.	Jan 11, 1999	BELLSOUTH TELECOMMUNICATIONS	23.11CREDIT
42.	Jan 11, 1999	BELLSOUTH TELECOMMUNICATIONS	457.33CREDIT
43.	Jan 11, 1999	BELLSOUTH TELECOMMUNICATIONS	7.91CREDIT
44.	Jan 12, 1999	BELLSOUTH TELECOMMUNICATIONS	62.48CREDIT
45.	Jan 12, 1999	BELLSOUTH TELECOMMUNICATIONS	276.64CREDIT
46.	Jan 12, 1999	BELLSOUTH TELECOMMUNICATIONS	23.11CREDIT
Total Adjustments			920.73

** Unregulated Charge

(continued)▶

AT&T

ABA PROFSNL ASSOC
Account Number: 305 374-0497 361 0442
Bill Period Date: Jan 14, 1999

For AT&T Billing Questions, Call 1 800 325-0138

Detailed Statement of Charges

Itemized Calls (continued) — *Amount*

305 374-7246 (continued)

Direct Dialed Calls (continued)

	Date	Place Called	Number Called	Rate*	Time	Min	Amount
35.	12/14	NASSAU BA	242 323-8448	BR	01:14PM	7	9.45
36.	12/14	RALEIGH NC	919 872-5800	BD	02:57PM	4	1.46
37.	12/14	DAYTONABCH FL	904 255-8131	HD	04:51PM	4	.64
38.	12/14	EAU GALLIE FL	407 242-7555	HD	04:54PM	4	.64
39.	12/14	PENSACOLA FL	850 595-8480	HD	04:58PM	2	.34
40.	12/14	SARASOTA FL	941 924-1365	HD	05:00PM	5	.59
41.	12/14	CLEARWATER FL	727 535-0608	HD	05:05PM	3	.36
42.	12/14	JACKSOLBCH FL	904 246-7466	HD	05:13PM	3	.37
43.	12/14	PANAMACITY FL	850 747-5500	HD	05:16PM	5	.60
44.	12/14	PANAMACITY FL	850 747-5500	HD	05:21PM	2	.25
45.	12/14	DIR ASSIST FL	813 555-1212	HD	06:48PM	1	1.10
46.	12/14	TAMPA FL	813 231-1800	HD	06:49PM	3	.36
47.	12/14	STPETERSBG FL	727 367-6461	HE	07:36PM	1	.13
48.	12/14	STPETERSBG FL	727 367-6461	HE	07:41PM	2	.25
49.	12/14	STPETERSBG FL	727 367-6461	HE	07:54PM	1	.13
50.	12/14	STPETERSBG FL	727 367-6461	HE	08:38PM	1	.13
51.	12/14	STPETERSBG FL	727 367-6461	HE	08:55PM	1	.13
52.	12/14	STPETERSBG FL	727 367-6461	HE	09:16PM	3	.36
53.	12/15	DIR ASSIST GA	912 555-1212	BD	09:09AM	1	1.40
54.	12/15	NEWORLEANS LA	504 734-1000	BD	09:15AM	1	.37
55.	12/15	BIRMINGHAM AL	205 879-8709	BD	10:07AM	1	.37
56.	12/15	GREENVILLE SC	864 234-5744	BD	10:07AM	1	.37
57.	12/15	BIRMINGHAM AL	205 879-8709	BD	02:42PM	1	.37
58.	12/15	DIR ASSIST AL	205 555-1212	BD	02:43PM	1	1.40
59.	12/16	NEW YORK NY	212 267-2727	BD	03:28PM	2	.73
60.	12/16	BINGHAMTON NY	607 723-5820	BD	03:42PM	1	.37
61.	12/16	APALACHIN NY	607 625-3649	BD	03:42PM	1	.37
62.	12/16	NEWPROVDNC BA	242 356-7411	BR	03:47PM	2	2.70
63.	12/16	NEWPROVDNC BA	242 377-2056	BR	03:50PM	2	2.70
64.	12/17	NEW YORK NY	212 267-2727	BD	10:00AM	8	2.91
65.	12/17	SARASOTA FL	941 924-1365	HD	11:10AM	4	.64
66.	12/17	VENICE FL	941 484-7225	HD	11:13AM	1	.18
67.	12/17	STPETERSBG FL	727 820-0059	HD	11:15AM	2	.33
68.	12/17	JACKSOLBCH FL	904 246-7466	HD	11:25AM	2	.34
69.	12/17	KISSIMMEE FL	407 847-6366	HD	11:29AM	1	.18
70.	12/17	NASSAU BA	242 328-3505	BR	12:25PM	2	2.70
71.	12/17	NEWPROVDNC BA	242 356-9297	BR	12:31PM	4	5.40
72.	12/17	NASSAU BA	242 323-8127	BR	03:05PM	7	9.45
73.	12/17	FLORALPARK NY	516 437-4811	BD	05:03PM	4	1.46
74.	12/17	MELBOURNE FL	407 733-0995	HD	05:21PM	1	.13
75.	12/17	QUEENS NY	718 358-1839	BD	05:46PM	1	.37
76.	12/17	MELBOURNE FL	407 984-0435	HD	06:09PM	4	.48
77.	12/17	MELBOURNE FL	407 984-0435	HD	06:13PM	1	.13

* Taxes and Rates Applied - See Back of First Page

(continued)▶

BELLSOUTH

ABA PROFSNL ASSOC
Account Number: 305 374-0497 618 0441
Bill Period Date: Jan 14, 1999

Thank you for choosing BellSouth. We sincerely appreciate your business.

Summary of Charges

	Amount
Previous Charges	
Amount of Last Bill	1,241.68
Less Payments	.00
Balance	1,241.68
Current Charges	
BellSouth	
Other Charges and Credits	.06CREDIT
Total Current Charges for BellSouth Companies	.06CREDIT
Total Current Charges Due Before Feb 5	.06CREDIT
Total Amount Due	1,241.62

Important Notice(s)

Please note: This is your revised final bill. See message following the BellSouth Current Charges.

Helpful Numbers

BellSouth Telecommunications, Inc. (BST)
NOTE: Numbers for other companies are listed on their bill pages.

Billing Questions or to Place an Order:

If calling from within the Florida BellSouth service area	305 780-2800
If calling from outside Florida or outside the Florida BellSouth service area	1-800-753-8172

Repair:

If calling from within the Florida BellSouth service area	305 780-2222

January we have new analog ga... Does this Balance comes from

(continued on page 2) ▶

***** PLEASE FOLD, TEAR HERE AND RETURN THIS PORTION WITH YOUR PAYMENT. *****

Please make check payable to BellSouth in U.S. funds.

CURRENT CHARGES DUE BEFORE	PAST DUE AMOUNT	TOTAL AMOUNT DUE	AMOUNT PAID
Feb 5	$1,241.68	$1,241.62	

305 374-0497 618 0441
Jan 14, 1999
AV FXX B01 A001607

☐ Check here if correspondence included.

#001607 1 AV 0.24

P.O. BOX 70807
CHARLOTTE NC
28272-0807

ABA PROFSNL ASSOC
801 BRICKELL BAY DR
SUITE 662
MIA FL 33131-2937

305937404976180449999912010960200000000000124168000012416 2

BELLSOUTH

ABA PROFSNL ASSOC
Account Number: 305 374-0497 618 0441
Bill Period Date: Jan 14, 1999

Detailed Statement of Charges

Other Charges and Credits		*Amount*
Work Completed On Jan 1, 1999		
1. Refund due to decrease in Telecommunications Access System Act Surcharge	**	.06CREDIT
Total Other Charges and Credits		.06CREDIT
Total BellSouth Current Charges		.06CREDIT

Messages

This revised final bill for telephone service includes a past due balance as well as charges not previously billed to your account. If you can not make payment in full, please call 305 780-2800 and we will try to establish a payment arrangement which meets your individual needs. Calling cards for this account are now void and should be destroyed.

** Unregulated Charge

BELLSOUTH

ABA PROFSNL ASSOC
Account Number: 305 374-0497 618 0441
Date: Jan 22, 1999

****
* SEE IMPORTANT NOTICE ENCLOSED *
****

***** PLEASE FOLD, TEAR HERE AND RETURN THIS PORTION WITH YOUR PAYMENT. *****

Please make check payable to BellSouth in U.S. funds.

TOTAL AMOUNT DUE	AMOUNT PAID
$1,241.62	

305 374-0497 618 0441
Jan 22, 1999
MT B01 E001036

☐ **Check here if correspondence included.**

#001036

P.O. BOX 33009
CHARLOTTE NC
28243-0001

ABA PROFSNL ASSOC
801 BRICKELL BAY DR
SUITE 662
MIA FL 33131-2937

30593740497618044999990201091030000000000001241620000124162

BELLSOUTH

ABA PROFSNL ASSOC
Account Number: 305 374-0497 618 0441
Date: Jan 22, 1999

ALTHOUGH WE HAVE PREVIOUSLY NOTIFIED YOU THAT THE $1241.62 FOR YOUR FORMER TELEPHONE SERVICE, 305 374-0497 618 IS PAST DUE, WE HAVE NOT RECEIVED PAYMENT.

WE BELIEVE THAT WE HAVE WAITED A REASONABLE LENGTH OF TIME FOR YOU TO SETTLE YOUR ACCOUNT AND THEREFORE, UNLESS PAYMENT IS RECEIVED BY FEBRUARY 5, 1999, WE SHALL REFER THE ACCOUNT TO A COLLECTION AGENCY FOR FURTHER ACTION.

WE ARE CONFIDENT, HOWEVER, THAT WHEN THIS MATTER HAS BEEN GIVEN YOUR SERIOUS CONSIDERATION, REMITTANCE WILL BE MADE IN FULL AND IT WILL NOT BE NECESSARY FOR US TO TAKE FURTHER ACTION.

IF YOU HAVE ANY QUESTIONS, PLEASE CALL 305 780-2187 FROM INSIDE THE LOCAL AREA OR, 1-800-828-4225 IF DIALING FROM OUTSIDE THE LOCAL AREA.

(PLEASE INCLUDE YOUR TELEPHONE NUMBER ON YOUR CHECK OR MONEY ORDER.)

MT E001036

BELLSOUTH

ABA PROFSNL ASSOC
Account Number: 305 374-0497 618 0441
Date: Feb 15, 1999

****
* SEE IMPORTANT NOTICE ENCLOSED *
****

***** PLEASE FOLD, TEAR HERE AND RETURN THIS PORTION WITH YOUR PAYMENT. *****

Please make check payable to BellSouth in U.S. funds.

TOTAL AMOUNT DUE	AMOUNT PAID
[redacted]	

[redacted]
Feb 15, 1999
MT B01 E000907

☐ **Check here if correspondence included.**

#000907

P.O. BOX 33009
CHARLOTTE NC
28243-0001

ABA PROFSNL ASSOC
801 BRICKELL BAY DR
SUITE 662
MIA FL 33131-2937

305937404976180449999902010910300000000000118172000011817 2

BELLSOUTH

ABA PROFSNL ASSOC
Account Number: 305 374-0497 618 0441
Date: Feb 15, 1999

WE PREVIOUSLY SENT YOU A FINAL BILL FOR YOUR FORMER TELEPHONE SERVICE. OUR RECORDS INDICATE THAT $1181.72 IS PAST DUE AND PAYMENT HAS NOT YET BEEN RECEIVED.

UNLESS PAYMENT OR PAYMENT ARRANGEMENTS ARE MADE FOR THE OUTSTANDING BALANCE BY FEBRUARY 25, 1999 IT WILL BE NECESSARY TO INTERRUPT YOUR PRESENT TELEPHONE SERVICE (374-3131). IF YOUR TELEPHONE SERVICE IS INTERRUPTED, A RESTORATION OF SERVICE CHARGE WILL APPLY AND A NEW OR ADDITIONAL DEPOSIT MAY ALSO BE REQUESTED.

TO ENSURE PROPER CREDIT PLEASE INCLUDE YOUR TELEPHONE NUMBER ON YOUR CHECK OR MONEY ORDER.

IF YOU HAVE ANY QUESTIONS, PLEASE CALL 305 780-2187 FROM INSIDE THE LOCAL AREA OR, 1-800-828-4225 IF DIALING FROM OUTSIDE THE LOCAL AREA.

MT E000907

***** PLEASE FOLD, TEAR HERE AND RETURN THIS PORTION WITH YOUR PAYMENT. *****

Please make check payable to BellSouth in U.S. funds.

TOTAL AMOUNT DUE	AMOUNT PAID
$1,929.16	

305 374-0497 361 0442
Feb 15, 1999
MP B01 E002683

☐ **Check here if correspondence included.**

#000344

P.O. BOX 33009
CHARLOTTE NC
28243-0001

ABA PROFSNL ASSOC
801 BRICKELL BAY DR
SUITE 662
MIA FL 33131

30593740497361044999990201057030000000000001929160000192916

BELLSOUTH

ABA PROFSNL ASSOC
Account Number: 305 374-0497 361 0442
Date: Feb 15, 1999

WE PREVIOUSLY SENT YOU A FINAL BILL FOR YOUR FORMER TELEPHONE SERVICE. OUR RECORDS INDICATE THAT $1929.16 IS PAST DUE AND PAYMENT HAS NOT YET BEEN RECEIVED.

UNLESS PAYMENT OR PAYMENT ARRANGEMENTS ARE MADE FOR THE OUTSTANDING BALANCE BY FEBRUARY 25, 1999 IT WILL BE NECESSARY TO INTERRUPT YOUR PRESENT TELEPHONE SERVICE (374-3131). IF YOUR TELEPHONE SERVICE IS INTERRUPTED, A RESTORATION OF SERVICE CHARGE WILL APPLY AND A NEW OR ADDITIONAL DEPOSIT MAY ALSO BE REQUESTED.

TO ENSURE PROPER CREDIT PLEASE INCLUDE YOUR TELEPHONE NUMBER ON YOUR CHECK OR MONEY ORDER.

IF YOU HAVE ANY QUESTIONS, PLEASE CALL 305 780-2187 FROM INSIDE THE LOCAL AREA OR, 1-800-828-4225 IF DIALING FROM OUTSIDE THE LOCAL AREA.

MP E002683

BELLSOUTH

ABA TRVL GRP CORP
Account Number: 305 374-0838 923 0443
Bill Period Date: Jul 14, 1998

Thank you for choosing BellSouth. We sincerely appreciate your business.

Summary of Charges

	Amount
Previous Charges	
Amount of Last Bill	117.81
Less Payments	.00
Balance	117.81
Current Charges	
BellSouth	
Monthly Service Charges	80.73
Local Usage	.10
Other Charges and Credits	1.88
Itemized Calls	15.75
Taxes	18.86
Total Current Charges for BellSouth Companies	117.32
Total Current Charges Due Before Aug 4	117.32
Total Amount Due	235.13

*$5.00 Phone credit

Important Notice(s)

Late Charge Reminder: A 1.5% Late Payment Charge will apply to any unpaid balance as of Aug 17.

Nonpayment of Regulated Charges may result in discontinuance of service. Failure to pay unregulated and certain other charges, all of which are identified by ** on your bill, will not result in an interruption of local service. The amount of Regulated Charges may be obtained by calling 305 780-2800.

Helpful Numbers

BellSouth Telecommunications, Inc. (BST)

NOTE: Numbers for other companies are listed on their bill pages.

Billing Questions or to Place an Order:

If calling from within the Florida BellSouth service area	305 780-2800
If calling from outside Florida or outside the Florida BellSouth service area	1-800-753-8172

BELLSOUTH

ABA TRVL GRP CORP
Account Number: 305 374-0838 923 0443
Bill Period Date: Jul 14, 1998

Helpful Numbers (continued)

BellSouth Telecommunications, Inc. (BST)

NOTE: Numbers for other companies are listed on their bill pages.

Repair:	
If calling from within the Florida BellSouth service area	305 780-2222
Text Telephone (TTY) Users 7:00 AM - 7:00 PM (CST) Monday - Friday:	
If calling from within the Florida BellSouth service area	305 780-2274
If calling from outside Florida or outside the Florida BellSouth service area	1 800 251-5325

Detailed Statement of Charges

Monthly Service Charges — *Amount*

Monthly Service - Jul 14 thru Aug 13

Basic Services	*Quantity*	*Unit Charge*	*Amount*
1. Business Line	1 ...	29.10	29.10
2. Emergency 911 Charge. This charge is billed on behalf of Dade County.	1 ...	# **	.50
3. FCC Charge for Interstate Toll Access	1 ...	8.17	8.17
4. Telecommunications Access System Act Surcharge	1 ...	.12 **	.12
Total Basic Services			37.89
Optional Services	*Quantity*	*Unit Charge*	
5. Three-Way Calling	1 ...	4.00	4.00
6. Call Forwarding Don't Answer Ring Control	1 ...	3.25	3.25
7. Remote Activation of Call Forwarding	1 ...	9.00	9.00
8. Multiple Feature credit for five features	1 ...	#	1.35CREDIT
9. Enhanced Caller ID with Anonymous Call Rejection	1 ...	15.99	15.99
10. MemoryCall® Answering Service, Personal/Extension Mailbox	1 ...	7.95 **	7.95
11. Call Forwarding Busy Line	1 ...	3.25	3.25
12. Message Waiting - Stutter Dialtone	1 ...	.75	.75
Total Optional Services			42.84
Total Monthly Service Charges			80.73

Local Usage — *Amount*

Local Measured Usage to the Expanded Area

	Calls	Total Mins	Charges	Amount
	1	1	.10	
13. Local Usage Summary				.10
Total Local Usage				.10

Other Charges and Credits — *Amount*

14. Late Payment Charge (1.5% of Unpaid Regulated Balance)		.58
15. Late Payment Charge (1.5% of Unpaid Unregulated Balance)	**	1.19
Work Completed On Jul 14, 1998		
16. Cost of Dade County manhole ordinance #83-3		.11
Total Other Charges and Credits		1.88

Quantity and/or Unit Charge may not apply
** Unregulated Charge

AV A000747

(continued)▶

BELLSOUTH

ABA TRVL GRP CORP
Account Number: 305 374-0838 923 0443
Bill Period Date: Aug 14, 1998

Thank you for choosing BellSouth. We sincerely appreciate your business.

Summary of Charges

	Amount
Previous Charges	
Amount of Last Bill	235.13
Less Payments	.00
Balance	235.13
Current Charges	
BellSouth	
Monthly Service Charges	80.70
Local Usage	55.84
Other Charges and Credits	3.85
Itemized Calls	13.50
Taxes	30.85
Total Current Charges for BellSouth Companies	184.74
Charges for Other Companies	35.00
Total Current Charges Due Before Sep 2	219.74
Total Amount Due	454.87

Important Notice(s)

Late Charge Reminder: A 1.5% Late Payment Charge will apply to any unpaid balance as of Sep 15.

Nonpayment of Regulated Charges may result in discontinuance of service. Failure to pay unregulated and certain other charges, all of which are identified by ** on your bill, will not result in an interruption of local service. The amount of Regulated Charges may be obtained by calling 305 780-2800.

(continued on page 2) ▶

BELLSOUTH

ABA TRVL GRP CORP
Account Number: 305 374-0838 923 0443
Bill Period Date: Aug 14, 1998

Helpful Numbers

BellSouth Telecommunications, Inc. (BST)

NOTE: Numbers for other companies are listed on their bill pages.

Billing Questions or to Place an Order:	
If calling from within the Florida BellSouth service area	305 780-2800
If calling from outside Florida or outside the Florida BellSouth service area	1-800-753-8172
Repair:	
If calling from within the Florida BellSouth service area	305 780-2222
Text Telephone (TTY) Users 7:00 AM - 7:00 PM (CST) Monday - Friday:	
If calling from within the Florida BellSouth service area	305 780-2274
If calling from outside Florida or outside the Florida BellSouth service area	1 800 251-5325

Detailed Statement of Charges

Monthly Service Charges

Monthly Service - Aug 14 thru Sep 13

Basic Services	*Quantity*	*Unit Charge*	*Amount*
1. Business Line	1 ...	29.10	29.10
2. Emergency 911 Charge. This charge is billed on behalf of Dade County.	1 ...	# **	.50
3. FCC Charge for Interstate Toll Access	1 ...	8.14	8.14
4. Telecommunications Access System Act Surcharge	1 ...	.12 **	.12
Total Basic Services			37.86
Optional Services	*Quantity*	*Unit Charge*	
5. Three-Way Calling	1 ...	4.00	4.00
6. Call Forwarding Don't Answer Ring Control	1 ...	3.25	3.25
7. Remote Activation of Call Forwarding	1 ...	9.00	9.00
8. Multiple Feature credit for five features	1 ...	#	1.35CREDIT
9. Enhanced Caller ID with Anonymous Call Rejection	1 ...	15.99	15.99
10. MemoryCall® Answering Service, Personal/Extension Mailbox	1 ...	7.95 **	7.95
11. Call Forwarding Busy Line	1 ...	3.25	3.25
12. Message Waiting - Stutter Dialtone	1 ...	.75	.75
Total Optional Services			42.84
Total Monthly Service Charges			80.70

Local Usage

Local Measured Usage to the Expanded Area

Calls	Total Mins	Charges	Amount
67	886	55.84	
13. Local Usage Summary			55.84
Total Local Usage			55.84

Other Charges and Credits

		Amount
14. Late Payment Charge (1.5% of Unpaid Regulated Balance)		2.19
15. Late Payment Charge (1.5% of Unpaid Unregulated Balance)	**	1.34

Quantity and/or Unit Charge may not apply
** Unregulated Charge

(continued)▶

BELLSOUTH

ABA TRVL GRP CORP
Account Number: 305 374-0838 923 0443
Bill Period Date: Aug 14, 1998

Detailed Statement of Charges

Taxes (continued)		*Amount*
Taxes on Unregulated Services		
43. State/Local Tax	**	.52
Total Taxes on Unregulated Services		.52
Total Taxes		30.85
Total BellSouth Current Charges		164.74

** Unregulated Charge

BELLSOUTH

ABA TRVL GRP CORP
Account Number: 305 374-0838 923 0443
Bill Period Date: Sep 14, 1998

Thank you for choosing BellSouth. We sincerely appreciate your business.

Summary of Charges

	Amount
Previous Charges	
Amount of Last Bill	454.87
Less Payments	.00
Balance	454.87
Current Charges	
BellSouth	
Local Usage	33.80
Other Charges and Credits	38.31CREDIT
Itemized Calls	6.75
Taxes	.12CREDIT
Total Current Charges for BellSouth Companies	2.12
Charges for Other Companies	35.00
Total Current Charges Due Before Oct 2	37.12
Total Amount Due	491.99

Important Notice(s)

Please note: This is your final bill. See message following the BellSouth Current Charges.

Helpful Numbers

BellSouth Telecommunications, Inc. (BST)
NOTE: Numbers for other companies are listed on their bill pages.

Billing Questions or to Place an Order:	
If calling from within the Florida BellSouth service area	305 780-2800
If calling from outside Florida or outside the Florida BellSouth service area	1-800-753-8172
Repair:	
If calling from within the Florida BellSouth service area	305 780-2222

(continued on page 2) ▶

***** PLEASE FOLD, TEAR HERE AND RETURN THIS PORTION WITH YOUR PAYMENT. *****

Please make check payable to BellSouth in U.S. funds.

CURRENT CHARGES DUE BEFORE	PAST DUE AMOUNT	TOTAL AMOUNT DUE	AMOUNT PAID
Oct 2	$454.87	$491.99	

305 374-0838 923 0443
Sep 14, 1998
AV 1014 FXX B01 A000742

☐ **Check here if correspondence included.**

#000742 1 AV 0.23

P.O. BOX 70807
CHARLOTTE NC
28272-0807

ABA TRVL GRP CORP
801 BRICKELL BAY DR
APT 662
MIA FL 33131-2937

30593740838923044999981201052020000000000045487000004919 9

BELLSOUTH

ABA TRVL GRP CORP
Account Number: 305 374-0838 923 0443
Bill Period Date: Sep 14, 1998

Helpful Numbers (continued)

BellSouth Telecommunications, Inc. (BST)

NOTE: Numbers for other companies are listed on their bill pages.

Text Telephone (TTY) Users 7:00 AM - 7:00 PM (CST) Monday - Friday:

If calling from within the Florida BellSouth service area	305 780-2274
If calling from outside Florida or outside the Florida BellSouth service area	1 800 251-5325

Detailed Statement of Charges

Local Usage

Local Measured Usage to the Expanded Area

	Calls	Total Mins	Charges	Amount
	38	538	33.80	
1. Local Usage Summary				33.80
Total Local Usage				33.80

Other Charges and Credits

		Amount
2. Late Payment Charge (1.5% of Unpaid Regulated Balance)		4.80
3. Late Payment Charge (1.5% of Unpaid Unregulated Balance)	**	2.02
Work Completed On Aug 27, 1998		
4. Credit for service disconnected (08/28/98 - 09/13/98) ($73.29/mo)		41.54CREDIT
Credit (08/28/98 - 09/13/98)		
5. FCC Charge for Network Access ($8.14/mo)		4.61CREDIT
Charge for removing (08/28/98 - 09/13/98)		
6. Multiple Feature credit for five features ($1.35/mo)		.77
Directory Assistance (DA) Usage		
7. 2 Call(s) to Local DA at No Charge		.00
8. 1 Call(s) to Local DA at $0.25 Each		.25
Total Other Charges and Credits		38.31CREDIT

Itemized Calls

Direct Dialed Calls

	Date	Place Called	Number Called	Rate*	Time	Min	Amount
9.	08/14	CALL RETRN		HD	07:06AM	1	.75
10.	08/20	CALL RETRN		HD	09:22AM	1	.75
11.	08/21	CALL RETRN		HD	09:59PM	1	.75
12.	08/21	CALL RETRN		HD	10:00PM	1	.75
13.	08/25	CALL RETRN		HD	08:41PM	1	.75
14.	08/26	CALL RETRN		HD	08:44AM	1	.75
15.	08/26	CALL RETRN		HD	11:44AM	1	.75
16.	08/26	CALL RETRN		HD	11:44AM	1	.75
17.	08/26	CALL RETRN		HD	03:54PM	1	.75
Total Direct Dialed Calls							6.75
Total Itemized Calls							6.75

** Unregulated Charge
* Taxes and Rates Applied - See Back of First Page

(continued)▶

HOLD

ABA TRVL GRP CORP
Account Number: 305 374-0838 923 0443
Bill Period Date: Sep 14, 1998

For HOLD Billing Services Billing Questions, Call 1 800 879-4653

Detailed Statement of Charges

Miscellaneous Charges and Credits		*Amount*
Service Provider - JET PAGES		
For billing questions, call 1 888 901-9783		
Date		
1. 08/12 WEB HOSTING INTERNET	**	29.95
Total Miscellaneous Charges and Credits		29.95

Taxes		*Amount*
2. State Tax	**	2.16
3. Florida Gross Receipts Surcharge	**	.74
4. City Tax	**	2.15
Total Taxes on Unregulated Services		5.05
Total Taxes		5.05

Total HOLD Billing Services Current Charges 35.00

** Unregulated Charge

This portion of your bill is provided as a service to HOLD Billing Services.

There is no connection between BellSouth and HOLD Billing Services.

BELLSOUTH

ABA TRVL GRP CORP
Account Number: 305 374-0838 923 0443
Date: Oct 6, 1998

****
* SEE IMPORTANT NOTICE ENCLOSED *
****

***** PLEASE FOLD, TEAR HERE AND RETURN THIS PORTION WITH YOUR PAYMENT. *****

Please make check payable to BellSouth in U.S. funds.

TOTAL AMOUNT DUE	AMOUNT PAID
$491.99	

305 374-0838 923 0443
Oct 6, 1998
NT B01 E011331

☐ Check here if correspondence included.

#011331

P.O. BOX 33009
CHARLOTTE NC
28243-0001

ABA TRVL GRP CORP
801 BRICKELL BAY DR
APT 662
MIA FL 33131-2937

30593740838923044999990201051030000000000004919900000049199

BELLSOUTH

ABA TRVL GRP CORP
Account Number: 305 374-0838 923 0443
Date: Oct 6, 1998

INQUIRIES CALL 305 780-2187

IMPORTANT NOTICE

Para Preguntas en Español: 780-2198

We recently sent you a final bill for your former telephone service. Our records indicate that $491.99 is past due and payment has not yet been received.

Please send us your payment today or call so that we can make arrangements for payment which are convenient for you.

If your payment is already on the way, please accept our thanks.

NT E011331

BELLSOUTH

ABA TRVL GRP CORP
Account Number: 305 374-0838 923 0443
Date: Dec 24, 1998

****
* SEE IMPORTANT NOTICE ENCLOSED *
****

***** PLEASE FOLD, TEAR HERE AND RETURN THIS PORTION WITH YOUR PAYMENT. *****

Please make check payable to BellSouth in U.S. funds.

TOTAL AMOUNT DUE	AMOUNT PAID
$690.99	

305 374-0838 923 0443
Dec 24, 1998
MT B01 E000809

☐ **Check here if correspondence included.**

#000809

P.O. BOX 33009
CHARLOTTE NC
28243-0001

ABA TRVL GRP CORP
801 BRICKELL BAY DR
APT 662
MIA FL 33131-2937

305937408389230449999902010510300000000000069099000069099

BELLSOUTH

ABA TRVL GRP CORP
Account Number: 305 374-0838 923 0443
Date: Dec 24, 1998

WE PREVIOUSLY SENT YOU A FINAL BILL FOR YOUR FORMER TELEPHONE SERVICE. OUR RECORDS INDICATE THAT $690.99 IS PAST DUE AND PAYMENT HAS NOT YET BEEN RECEIVED.

UNLESS PAYMENT OR PAYMENT ARRANGEMENTS ARE MADE FOR THE OUTSTANDING BALANCE BY JANUARY 4, 1999 IT WILL BE NECESSARY TO INTERRUPT YOUR PRESENT TELEPHONE SERVICE (374-0497). IF YOUR TELEPHONE SERVICE IS INTERRUPTED, A RESTORATION OF SERVICE CHARGE WILL APPLY AND A NEW OR ADDITIONAL DEPOSIT MAY ALSO BE REQUESTED.

TO ENSURE PROPER CREDIT PLEASE INCLUDE YOUR TELEPHONE NUMBER ON YOUR CHECK OR MONEY ORDER.

IF YOU HAVE ANY QUESTIONS, PLEASE CALL 305 780-2187 FROM INSIDE THE LOCAL AREA OR, 1-800-828-4225 IF DIALING FROM OUTSIDE THE LOCAL AREA.

BELLSOUTH

ABA TRVL GRP CORP
Account Number: 305 374-0838 923 0443
Bill Period Date: Jan 14, 1999

Thank you for choosing BellSouth. We sincerely appreciate your business.

Summary of Charges

	Amount
Previous Charges	
Amount of Last Bill	690.99
Less Payments	.00
Adjustments	335.91CREDIT
Balance	355.08
Current Charges	
BellSouth	
Other Charges and Credits	.02CREDIT
Total Current Charges for BellSouth Companies	.02CREDIT
Total Current Charges Due Before Feb 5	.02CREDIT
Total Amount Due	355.06

Important Notice(s)

Please note: This is your revised final bill. See message following the BellSouth Current Charges.

Helpful Numbers

BellSouth Telecommunications, Inc. (BST)

NOTE: Numbers for other companies are listed on their bill pages.

Billing Questions or to Place an Order:	
If calling from within the Florida BellSouth service area	305 780-2800
If calling from outside Florida or outside the Florida BellSouth service area	1-800-753-8172
Repair:	
If calling from within the Florida BellSouth service area	305 780-2222

5/8/99 What is purpose of trip to Highlite Wks

(continued on page 2)

***** PLEASE FOLD, TEAR HERE AND RETURN THIS PORTION WITH YOUR PAYMENT. *****

Please make check payable to BellSouth in U.S. funds.

CURRENT CHARGES DUE BEFORE	PAST DUE AMOUNT	TOTAL AMOUNT DUE	AMOUNT PAID
Feb 5	$355.08	$355.06	

305 374-0838 923 0443
Jan 14, 1999
AV FXX B01 A001625

☐ Check here if correspondence included.

#001625 1 AV 0.24

P.O. BOX 70807
CHARLOTTE NC
28272-0807

ABA TRVL GRP CORP
801 BRICKELL BAY DR
APT 662
MIA FL 33131-2937

30593740838923044999991201056020000000000003550800000035506

BELLSOUTH

ABA TRVL GRP CORP
Account Number: 305 374-0838 923 0443
Bill Period Date: Jan 14, 1999

Detailed Statement of Charges

Other Charges and Credits		*Amount*
Work Completed On Jan 1, 1999		
1. Refund due to decrease in Telecommunications Access System Act Surcharge	**	.02CREDIT
Total Other Charges and Credits		.02CREDIT
Total BellSouth Current Charges		.02CREDIT

Messages

This revised final bill for telephone service includes charges not previously billed to your account. Since charges from your initial final bill were not paid by the past due date your account was previously referred to a collection agency. The collection agency has been notified of these additional charges. Calling cards for this account are now void and should be destroyed.

** Unregulated Charge

BELLSOUTH

ABA PROFSNL ASSOC
Account Number: 305 374-0838 359 0440
Bill Period Date: Oct 14, 1998

Thank you for choosing BellSouth. We sincerely appreciate your business.

Summary of Charges

	Amount
Previous Charges	
Amount of Last Bill	.00
Less Payments	.00
Balance	.00
Current Charges	
Charges for BellSouth Companies	282.84
Charges for Other Companies	.00
Total Current Charges Due Before Nov 2	282.84
Total Amount Due	282.84

Important Notice(s)

Please note: This is your final bill. See message following the BellSouth Current Charges.

(continued on page 2) ▶

BELLSOUTH

ABA PROFSNL ASSOC
Account Number: 305 374-0838 359 0440
Bill Period Date: Oct 14, 1998

Helpful Numbers

BellSouth Telecommunications, Inc. (BST)

NOTE: Numbers for other companies are listed on their bill pages.

Billing Questions or to Place an Order:
If calling from within the Florida BellSouth service area 1 800 945-6500
If calling from outside Florida or outside the Florida BellSouth service area 1 800 753-7289
Repair:
If calling from within the Florida BellSouth service area 1 800 247-2020
Text Telephone (TTY) Users 7:00 AM - 7:00 PM (CST) Monday - Friday:
If calling from within the Florida BellSouth service area 305 780-2274
If calling from outside Florida or outside the Florida BellSouth service area 1 800 251-5325

Detailed Statement of Charges

Local Usage — *Amount*

Local Usage Summary for 305 374-3162

Local Measured Usage to the Expanded Area

Calls	Total Mins	Charges
1	61	3.70

1. Local Usage Summary 3.70

Total Local Usage 3.70

Other Charges and Credits — *Amount*

Work Completed On Sep 1, 1998
PON: DOLORES-NORTHN TEL SO: CQD6N6X3
374-0838
Credit for service removed (09/02/98 - 10/13/98)
2. Business Line ($29.10/mo) 40.74CREDIT
Charge for service added (09/02/98 - 10/13/98)
3. Business Line ($29.10/mo) 40.74
4. Charge for processing change in service 19.00

HB E043884

(continued)▶

BELLSOUTH

ABA PROFSNL ASSOC
Account Number: 305 374-0838 359 0440
Bill Period Date: Oct 14, 1998

Detailed Statement of Charges

Other Charges and Credits (continued)	*Amount*
Work Completed On Sep 1, 1998 (continued)	
PON: DOLORES-NORTHN TEL SO: NQ2Y3346 (continued)	
374-0838 (continued)	
Charges (09/02/98 - 10/13/98)	
22. FCC Charge for Network Access ($8.14/mo)	11.40
Your IntraLATA Long Distance Company is BellSouth Telecomm. Inc.	
23. Charge for service connected - first line	56.00
24. Charge for service connected - additional line(s)	12.00
374-3162	
Your InterLATA Long Distance Company for 374-3162 is AT&T	
Charge for new service (09/02/98 - 10/13/98)	
25. Business Line ($29.10/mo)	40.74
Charges (09/02/98 - 10/13/98)	
26. FCC Charge for Network Access ($8.14/mo)	11.40
Your Local Toll company for 374-3162 is BellSouth Telecomm. Inc.	
Work Completed On Sep 4, 1998	
PON: DOLORES-NORTHN TEL SO: DQV27183	
374-0838	
27. Adjustment to cover minimum charge for local service (09/02/98 - 10/13/98) ($80.08/mo)	32.04CREDIT
374-3162	
28. Adjustment to cover minimum charge for local service (09/02/98 - 10/13/98) ($73.38/mo)	29.36CREDIT
Total Other Charges and Credits	240.46

Taxes	*Amount*
Taxes on Regulated Services	
29. Federal Tax	4.65
30. State/Local Tax	18.07
31. Florida Gross Receipts Surcharge	1.77
32. City Tax	9.68
33. Franchise Charge	3.99
Total Taxes on Regulated Services	38.16

HB E043884

(continued)▶

BELLSOUTH

Payment Receipt

Thank You

We Appreciate Your Business!

Your payment will post to your BellSouth account within seconds.

Should Be refunded.
this account Did not existed
prior to 8/1998

SEARS ADVENTR 2
3GF PA P 0047 12/12/98 $144.76
PAYM 305-374-0835 359-0440-B01

ELLSOUTH

ABA PROFSNL ASSOC
Account Number: 305 374-0838 359 0
Bill Period Date: Oct 14, 1998

Detailed Statement of Charges

es and Credits (continued)	Amount
ted On Sep 1, 1998 (continued)	
S-NORTHN TEL SO: NQ2Y3346 (continued)	
ontinued)	
/02/98 - 10/13/98)	
harge for Network Access ($8.14/mo)	11.40
ATA Long Distance Company is BellSouth Telecomm. Inc.	
e for service connected - first line	56.00
e for service connected - additional line(s)	12.00
ATA Long Distance Company for 374-3162 is AT&T	
new service (09/02/98 - 10/13/98)	
ess Line ($29.10/mo)	40.74
/02/98 - 10/13/98)	
harge for Network Access ($8.14/mo)	11.40
Toll company for 374-3162 is BellSouth Telecomm. Inc.	
ted On Sep 4, 1998	
S-NORTHN TEL SO: DQV27183	
tment to cover minimum charge for local service	
2/98 - 10/13/98) ($80.08/mo)	32.04CRE
tment to cover minimum charge for local service	
2/98 - 10/13/98) ($73.38/mo)	29.36CRE
Charges and Credits	240.46

ulated Services	Amount
al Tax	4.65
/Local Tax	18.07
da Gross Receipts Surcharge	1.77
Tax	9.68

ABA PROFSNL ASSOC
Account Number: 305 374-0808 359
Bill Period Date: Oct 14, 1998

Helpful Numbers

BellSouth Telecommunications, Inc. (BST)
: Numbers for other companies are listed on their bill pages.

tions or to Place an Order:
from within the Florida BellSouth
a 1 800 945-6
from outside Florida or outside the
lSouth service area 1 800 753-7

from within the Florida BellSouth service area 1 800 247-2
e (TTY) Users 7:00 AM - 7:00 PM (CST) Monday - Friday:
from within the Florida BellSouth
a 305 780-2
from outside Florida or outside the
lSouth service area 1 800 251-5

Detailed Statement of Charges

Amount

n.nary for 305 374-
'sage to be Expanded area

Dates	Total Mins	Charges
1	61	3.70

sage Summary 3.70
sage 3.70

Amount

d On Sep 1 1998
NORTH TEL DC: DTS.SERV

r
s

BELLSOUTH

CKT: 70.IBSD.512986..SB Page 1
ABA PROFSNL ASSOC
Account Number: 305 374-0838 360 0441
Bill Period Date: Oct 14, 1998

Thank you for choosing BellSouth. We sincerely appreciate your business. ISDN-

Summary of Charges

	Amount
Previous Charges	
Amount of Last Bill	.00
Less Payments	.00
Balance	.00
Current Charges	
Charges for BellSouth Companies	1,515.02
Charges for Other Companies	1,186.43
Total Current Charges Due Before Nov 5	2,701.45
Total Amount Due	2,701.45

Important Notice(s)

Please note: See Welcome Message following the BellSouth Current Charges.

Late Charge Reminder: A 1.5% Late Payment Charge will apply to any unpaid balance as of Nov 16.

(continued on page 2) ▶

***** PLEASE FOLD, TEAR HERE AND RETURN THIS PORTION WITH YOUR PAYMENT. *****

Please make check payable to BellSouth in U.S. funds.

CURRENT CHARGES DUE BEFORE	PAST DUE AMOUNT	TOTAL AMOUNT DUE	AMOUNT PAID
Nov 5	$0.00	$2,701.45	

305 374-0838 360 0441
Oct 14, 1998
HB 08 B01 E043885

☐ Check here if correspondence included.

P.O. BOX 33009
CHARLOTTE NC
28243-0001

ABA PROFSNL ASSOC
801 BRICKELL BAY DR
SUIT 662
MIA FL 33131-2937

30593740838360044120880201080110000000000000000000000270145

Important Notice(s) (continued)

Nonpayment of Regulated Charges may result in discontinuance of service. Failure to pay unregulated and certain other charges, all of which are identified by ** on your bill, will not result in an interruption of local service. The amount of Regulated Charges may be obtained by calling 1 800 945-6500.

Helpful Numbers

BellSouth Telecommunications, Inc. (BST)

NOTE: Numbers for other companies are listed on their bill pages.

Billing Questions or to Place an Order:	
If calling from within the Florida BellSouth service area	1 800 945-6500
If calling from outside Florida or outside the Florida BellSouth service area	1 800 753-7289
Repair:	
If calling from within the Florida BellSouth service area	1 800 247-2020
Text Telephone (TTY) Users 7:00 AM - 7:00 PM (CST) Monday - Friday:	
If calling from within the Florida BellSouth service area	305 780-2274
If calling from outside Florida or outside the Florida BellSouth service area	1 800 251-5325

Detailed Statement of Charges

Monthly Service Charges		*Amount*
Monthly Service - Oct 14 thru Nov 13		
Basic Services	*Quantity*	
1. Emergency 911 Charge. This charge is billed on behalf of Dade County.	1 ... **	1.50
2. FCC Charge for Interstate Toll Access	3 ...	15.00
3. Telecommunications Access System Act Surcharge	3 ... **	.36
Total Basic Services		16.86
Optional Services	*Quantity*	
4. Call Fwd Busy Line per User for Voice or Voice/Data (ISDN)	1 ...	2.50

** Unregulated Charge

(continued)▶

Detailed Statement of Charges

Local Usage (continued)

Local Usage Summary for 305 374-3131 — *Amount*

Local Measured Usage to the Expanded Area

	Calls	Total Mins	Charges	
14. Local Usage Summary	5	22	1.52	
Local Usage Summary for 305 374-6404				1.52

Local Measured Usage to the Expanded Area

	Calls	Total Mins	Charges	
15. Local Usage Summary	3	33	2.10	
Local Usage Summary for 305 374-7246				2.10

Local Measured Usage to the Expanded Area

	Calls	Total Mins	Charges	
16. Local Usage Summary	72	1087	68.10	
Total Local Usage				68.10
				76.10

Other Charges and Credits

Amount

Work Completed On Sep 4, 1998
PON: DOLORES-NORTHN TEL SO: CQCCXBP4
374-0838
One-time charge for

17. Jack equipment	9.00
18. Charge for service connected - additional line(s)	12.00

Circuit Number: 70.IBSD.512987..SB
Charge for service added (09/05/98 - 10/13/98)

19. 2 ISDN B Channel Threshold Voice/Data ($32.50/mo)	42.25
20. ISDN Threshold Pricing, Basic Rate DSL Access Arrangement, Business ($55.00/mo)	71.50
21. FCC Charge for Excess Line Port for Basic Rate ISDN Digital Subscriber Line ($2.44/mo)	3.17

Detailed Statement of Charges

Other Charges and Credits (continued) — *Amount*

Work Completed On Sep 4, 1998 (continued)
PON: DOLORES-NORTHN TEL SO: CQCJXRB7 (continued)
374-0838 (continued)
Circuit Number: 70.IBSD.512988..SB (continued)
One-time charge for
32. ISDN Threshold Pricing, Basic Rate DSL Access Arrangement, Business 130.00
374-3131
Your InterLATA Long Distance Company for 374-3131 is AT&T
374-3162
Your InterLATA Long Distance Company for 374-3162 is AT&T
374-3131
Your Local Toll company for 374-3131 is BellSouth Telecomm. Inc.
One-time charge for
33. ISDN Access to B Channel Voice/Data Threshold Pricing 10.00
374-3162
Your Local Toll company for 374-3162 is BellSouth Telecomm. Inc.
One-time charge for
34. ISDN Access to B Channel Voice/Data Threshold Pricing 10.00
PON: DOLORES-NORTHN TEL SO: NQC704R3
374-0838
Your InterLATA Long Distance Company is AT&T
One-time charge for
35. Jack equipment 9.00
Your IntraLATA Long Distance Company is BellSouth Telecomm. Inc.
One-time charge for
36. ISDN Access to B Channel Voice/Data Threshold Pricing 10.00
37. Charge for service connected - additional line(s) 12.00
Circuit Number: 70.IBSD.512986..SB
Charge for new service (09/05/98 - 10/13/98)
38. 2 ISDN B Channel Threshold Voice/Data ($32.50/mo) 42.25
39. ISDN Threshold Pricing, Basic Rate DSL Access Arrangement, Business ($55.00/mo) 71.50
40. FCC Charge for Excess Line Port for Basic Rate ISDN Digital Subscriber Line ($2.44/mo) 3.17

(continued)▶

ABA PROFSNL ASSOC
Account Number: 305 374-0838 360 0441
Bill Period Date: Oct 14, 1998

Detailed Statement of Charges

Other Charges and Credits (continued)	*Amount*
Work Completed On Oct 14, 1998	
SO: MIA MANHOLE	
374-0838	
52. Cost of Dade County manhole ordinance #83-3	.11
374-7246	
53. Cost of Dade County manhole ordinance #83-3	.11
374-0497	
54. Cost of Dade County manhole ordinance #83-3	.11
374-6404	
55. Cost of Dade County manhole ordinance #83-3	.11
374-3131	
56. Cost of Dade County manhole ordinance #83-3	.11
374-3162	
57. Cost of Dade County manhole ordinance #83-3	.11
Total Other Charges and Credits	934.70

Taxes	*Amount*
Taxes on Regulated Services	
58. Federal Tax	23.19
59. State/Local Tax	97.71
60. Florida Gross Receipts Surcharge	8.14
61. City Tax	51.59
62. Franchise Charge	21.23
Total Taxes on Regulated Services	201.86
Taxes on Unregulated Services	
63. State/Local Tax ..... **	1.98
Total Taxes on Unregulated Services	1.98
Total Taxes	203.84

Total BellSouth Current Charges	1,515.02

** Unregulated Charge

HB E043885

(continued)▶

AT&T

ABA PROFSNL ASSOC
Account Number: 305 374-0838 360 0441
Bill Period Date: Oct 14, 1998

For AT&T Billing Questions, Call 1 800 325-0138

Detailed Statement of Charges

Volume Discounts

AT&T Small Business℠ Advantage Discount Summary

	Amount to be Discounted	Discount Percent	Discount Amount	Amount
1. Q Calls eligible for AT&T Small Business℠ Advantage Area Code Discount	105.11	10%	10.51	10.51CREDIT
2. U Calls eligible for AT&T Small Business℠ Advantage International Country Discount	1.86	10%	.18	.18CREDIT
3. V Calls eligible for Domestic AT&T Small Business℠ Advantage Discount	68.52	10%	6.85	6.85CREDIT
4. W Calls eligible for International AT&T Small Business℠ Advantage Discount	.00	10%	.00	.00
Total AT&T Small Business℠ Advantage Discount Summary	175.49		17.54	17.54CREDIT
Total Volume Discounts				17.54CREDIT

Itemized Calls

305 374-0497

Direct Dialed Calls

	Date	Place Called	Number Called	Rate*	Time	Min	Amount
5.	09/22	BEAVERTON OR	503 574-1549	BE V	07:50PM	1	.37
6.	09/30	FORT WORTH TX	817 317-3115	BD V	11:56AM	2	.73
7.	09/30	FORT WORTH TX	817 317-3115	BD V	11:59AM	3	1.10
8.	10/07	LUMBERTON NC	910 739-0140	BD V	03:27PM	1	.37

* Taxes and Rates Applied - See Back of First Page

HB E043885

(continued)▶

AT&T

ABA PROFSNL ASSOC
Account Number: 305 374-0838 360 0441
Bill Period Date: Oct 14, 1998

For AT&T Billing Questions, Call 1 800 325-0138

Detailed Statement of Charges

Itemized Calls (continued) — *Amount*

305 374-0497 (continued)

Calling Card Calls (continued)

Date	Called From	Called To	Rate*	Time	Min	Amount
Card 3053 (continued)						
20. 09/18	518 296-8956 BRAMANVL NY	305 361-7466 MIAMI FL	BEC	09:12PM	9	4.55
21. 09/18	518 296-8956 BRAMANVL NY	802 824-3892 SOLONDODRY VT	AEC	10:44PM	11	5.35
22. 09/18	518 296-8956 BRAMANVL NY	973 827-8748 FRANKLINBO NJ	AECM	10:58PM	27	11.75
23. 09/19	518 296-8956 BRAMANVL NY	518 891-1854 SARANAC LK NY	ANC	08:38AM	1	.72
24.	NY TAXES					.07
25. 09/19	518 296-8956 BRAMANVL NY	518 761-6366 GLENSFALLS NY	ANC	08:39AM	1	.72
26.	NY TAXES					.07
27. 09/19	518 296-8956 BRAMANVL NY	518 793-7701 GLENSFALLS NY	ANC	09:22AM	3	.96
28.	NY TAXES					.10
29. 09/19	518 296-8956 BRAMANVL NY	973 827-8748 FRANKLINBO NJ	ANC	10:34AM	7	3.75
30. 09/19	518 296-8954 BRAMANVL NY	518 793-7701 GLENSFALLS NY	ANC	10:44AM	1	.72
31.	NY TAXES					.07
32. 09/19	518 296-8956 BRAMANVL NY	518 793-7701 GLENSFALLS NY	ANC	10:45AM	2	.84
33.	NY TAXES					.08

* Taxes and Rates Applied - See Back of First Page

HB E043885

(continued)▶

AT&T

ABA PROFSNL ASSOC
Account Number: 305 374-0838 360 0441
Bill Period Date: Oct 14, 1998

For AT&T Billing Questions, Call 1 800 325-0138

Detailed Statement of Charges

Itemized Calls (continued)

305 374-0497 (continued)

Calling Card Calls (continued)

Date	Called From	Called To	Rate*	Time	Min	Amount
Card 3053 (continued)						
47. 09/20	973 827-6768 FRANKLINBO NJ	802 362-4532 MANCHESTER VT	AEC	06:46PM	1	1.35
48. 09/20	973 827-6768 FRANKLINBO NJ	813 876-4749 TAMPA FL	BEC	06:48PM	1	1.35
49. 09/20	973 827-8748 FRANKLINBO NJ	787 721-5161 SANTURCE PR	AEC	07:06PM	5	2.95
50. 09/21	973 827-6768 FRANKLINBO NJ	802 362-4532 MANCHESTER VT	ADC	10:46AM	11	5.35
51. 09/21	305 989-3939 MIAMI FL	787 721-5161 SANTURCE PR	BEC	08:48PM	11	5.35
52. 09/22	305 859-8963 MIAMI FL	802 362-4532 MANCHESTER VT	BDC	09:16AM	11	5.35
53. 09/22	305 859-8963 MIAMI FL	787 785-3854 BAYAMON PR	BDC	09:29AM	25	10.95
54. 09/22	305 859-8963 MIAMI FL	787 787-7195 BAYAMON PR	BDC	09:54AM	13	6.15
55. 09/22	305 859-8963 MIAMI FL	787 721-5161 SANTURCE PR	BDC	10:08AM	10	4.95
56. 09/22	305 823-9575 MIAMI FL	787 724-8533 SAN JUAN PR	BDC	11:17AM	3	2.15
57. 09/22	305 823-9575 MIAMI FL	802 362-4532 MANCHESTER VT	BDC	11:21AM	38	16.15
58. 09/22	305 823-9575 MIAMI FL	305 884-6970 MIAMI FL	HDC	12:00PM	1	1.19

* Taxes and Rates Applied - See Back of First Page

HB E043885

(continued)▶

AT&T

ABA PROFSNL ASSOC
Account Number: 305 374-0838 360 0441
Bill Period Date: Oct 14, 1998

For AT&T Billing Questions, Call 1 800 325-0138

Detailed Statement of Charges

Itemized Calls (continued)

305 374-0497 (continued)

Calling Card Calls (continued)

Date	Called From	Called To	Rate*	Time	Min	Amount
Card 3053 (continued)						
71. 09/25	305 884-6970 MIAMI FL	787 723-4222 SAN JUAN PR	BDC	12:53PM	4	2.55
72. 09/25	305 884-6970 MIAMI FL	787 723-7586 SAN JUAN PR	BDC	01:01PM	5	2.95
73. 09/25	305 884-6970 MIAMI FL	414 342-4680 MILWAUKEE WI	BDC	01:09PM	3	2.15
74. 09/25	305 884-6970 MIAMI FL	787 832-1275 MAYAGUEZ PR	BDC	01:14PM	1	1.35
75. 09/25	305 884-6970 MIAMI FL	787 832-1275 MAYAGUEZ PR	BDC	01:15PM	11	5.35
76. 09/26	305 361-7466 MIAMI FL	787 724-0182 SAN JUAN PR	BNC	10:25AM	3	2.15
77. 09/26	305 361-7466 MIAMI FL	908 459-4101 HOPE NJ	BNC	11:32AM	5	2.95
78. 09/26	305 361-7466 MIAMI FL	802 824-3892 SOLONDODRY VT	BNC	06:36PM	21	9.05
79. 09/26	305 361-7466 MIAMI FL	813 879-8294 TAMPA FL	HNC	07:39PM	19	5.70
80. 09/27	305 361-7466 MIAMI FL	305 279-1021 MIAMI FL	HNC	12:47PM	14	4.31
81. 09/27	305 361-7466 MIAMI FL	561 832-9761 WPALMBEACH FL	HNC	01:07PM	31	8.39
82. 09/28	305 651-1752 NORTH DADE FL	787 721-5161 SANTURCE PR	BDC	08:59AM	15	6.65

* Taxes and Rates Applied - See Back of First Page

HB E043885

(continued)▶

AT&T

ABA PROFSNL ASSOC
Account Number: 305 374-0838 360 0441
Bill Period Date: Oct 14, 1998

For AT&T Billing Questions, Call 1 800 325-0138

Detailed Statement of Charges

Itemized Calls (continued) — *Amount*

305 374-0497 (continued)

Calling Card Calls (continued)

Date	Called From	Called To	Rate*	Time	Min	Amount
Card 3053 (continued)						
95. 09/29	305 884-6970 MIAMI FL	787 746-0301 CAGUAS PR	BEC	06:40PM	1	1.05
96. 09/29	305 884-6970 MIAMI FL	603 447-5771 CONWAY NH	BEC	06:44PM	3	1.85
97. 09/29	305 884-6970 MIAMI FL	787 787-7195 BAYAMON PR	BEC	07:04PM	22	9.45
98. 09/29	305 361-7466 MIAMI FL	787 724-0182 SAN JUAN PR	BNC	11:40PM	2	1.45
99. 09/30	305 270-0084 MIAMI FL	530 541-8283 SOUTHTAHOE CA	BDC	11:43AM	6	3.35
100. 09/30	305 270-0084 MIAMI FL	703 765-0303 ALEXANDRIA VA	BDC	11:50AM	1	1.35
101. 09/30	305 651-3137 NORTH DADE FL	787 785-3854 BAYAMON PR	BDC	12:48PM	21	9.35
102. 09/30	305 361-7466 MIAMI FL	727 458-5559 CLEARWATER FL	HDC	03:23PM	8	2.95
103. 09/30	305 361-7466 MIAMI FL	802 384-1824 DORSET VT	BDC	03:35PM	22	9.75
104. 09/30	305 361-7466 MIAMI FL	727 458-5559 CLEARWATER FL	HDC	04:11PM	3	1.70
105. 09/30	305 361-7466 MIAMI FL	802 384-1824 DORSET VT	BEC	05:21PM	3	2.15
106. 09/30	305 651-1752 NORTH DADE FL	703 765-0303 ALEXANDRIA VA	BES	07:40PM	23	11.65

* Taxes and Rates Applied - See Back of First Page

HB E043885

(continued)▶

AT&T

ABA PROFSNL ASSOC
Account Number: 305 374-0838 360 0441
Bill Period Date: Oct 14, 1998

For AT&T Billing Questions, Call 1 800 325-0138

Detailed Statement of Charges

Itemized Calls (continued) — *Amount*

305 374-0497 (continued)

Calling Card Calls (continued)

Card 3053 (continued)

	Date	Called From	Called To	Rate*	Time	Min	Amount
119.	10/02	908 782-5480 FLEMINGTON NJ	305 872-2532 BIG PINE FL	BEC	09:27PM	26	11.35
120.	10/02	908 782-6411 FLEMINGTON NJ	787 746-0301 CAGUAS PR	AEC	09:56PM	13	6.15
121.	10/03	908 782-6614 FLEMINGTON NJ	703 765-0303 ALEXANDRIA VA	ANC	10:45AM	10	4.95
122.	10/03	703 683-6000 ALEXANDRIA VA	703 765-0303 ALEXANDRIA VA	ANC	05:55PM	1	.67
123.	10/03	703 683-6000 ALEXANDRIA VA	773 248-4238 CHICAGO IL	ANC	05:59PM	7	3.75
124.	10/03	703 683-6000 ALEXANDRIA VA	787 724-0182 SAN JUAN PR	ANC	06:08PM	2	1.75
125.	10/03	703 683-6000 ALEXANDRIA VA	787 761-4227 TRUJILALTO PR	ANC	06:10PM	1	1.35
126.	10/03	703 683-6000 ALEXANDRIA VA	813 876-4749 TAMPA FL	BNC	09:24PM	3	2.15
127.	10/03	703 683-6000 ALEXANDRIA VA	787 790-1878 GUAYNABO PR	ANC	09:34PM	10	4.95
128.	10/03	703 683-6005 ALEXANDRIA VA	787 722-1159 SAN JUAN PR	ANC	09:44PM	20	8.95
129.	10/03	703 683-6000 ALEXANDRIA VA	051 156-4554 PERU	ARC	10:10PM	1	5.68
130.	10/03	703 683-6005 ALEXANDRIA VA	303 790-4245 ENGLEWOOD CO	ANC	10:17PM	1	1.35

* Taxes and Rates Applied - See Back of First Page

(continued)▶

For AT&T Billing Questions, Call 1 800 325-0138

Detailed Statement of Charges

Itemized Calls (continued)

305 374-0497 (continued)

Calling Card Calls (continued)

	Date	Called From	Called To	Rate*	Time	Min	Amount
Card 3053 (continued)							
143.	10/04	804 748-6521 CHESTER VA	802 384-1824 DORSET VT	ANC	11:09PM	1	1.35
144.	10/04	804 748-6521 CHESTER VA	051 147-1760 PERU	ARC	11:11PM	6	16.58
145.	10/05	804 751-0736 CHESTER VA	404 320-1619 ATLANTA GA	ADC	09:30AM	19	8.25
146.	10/05	803 642-5692 AIKEN SC	770 343-8692 ALPHARETTA GA	AEC	08:19PM	11	5.05
147.	10/05	803 642-5692 AIKEN SC	305 374-3131 MIAMI FL	BEC	09:34PM	8	3.85
148.	10/05	803 642-5692 AIKEN SC	305 361-7466 MIAMI FL	BEC	09:43PM	13	5.85
149.	10/05	803 642-5692 AIKEN SC	787 721-5161 SANTURCE PR	AEC	10:03PM	15	6.65
150.	10/05	803 642-5692 AIKEN SC	787 724-0182 SAN JUAN PR	AEC	10:25PM	2	1.45
151.	10/05	803 642-5692 AIKEN SC	787 739-7864 CIDRA PR	AEC	10:40PM	1	1.05
152.	10/05	803 642-5692 AIKEN SC	303 499-7111 BOULDER CO	AEC	10:49PM	3	1.85
153.	10/06	803 642-5692 AIKEN SC	305 361-7466 MIAMI FL	BNC	07:26AM	14	6.25
154.	10/06	770 483-9442 PAYPHONE GA	770 343-8692 ALPHARETTA GA	ADC	11:00AM	1	.88

* Taxes and Rates Applied - See Back of First Page

AT&T

ABA PROFSNL ASSOC
Account Number: 305 374-0838 360 0441
Bill Period Date: Oct 14, 1998

For AT&T Billing Questions, Call 1 800 325-0138

Detailed Statement of Charges

Itemized Calls (continued) — *Amount*

305 374-0497 (continued)

Calling Card Calls (continued)

	Date	Called From	Called To	Rate*	Time	Min	Amount
Card 3053 (continued)							
167.	10/07	770 343-8692 ALPHARETTA GA	802 384-1824 DORSET VT	ADC	10:36AM	1	1.05
168.	10/07	770 343-8692 ALPHARETTA GA	561 832-9761 WPALMBEACH FL	BDC	10:52AM	1	1.05
169.	10/07	770 343-8692 ALPHARETTA GA	305 595-0777 MIAMI FL	BDC	10:56AM	5	2.65
170.	10/07	770 343-8692 ALPHARETTA GA	212 888-7000 NEW YORK NY	ADC	11:02AM	1	1.05
171.	10/07	770 343-8692 ALPHARETTA GA	516 378-4670 FREEPORT NY	ADC	11:03AM	18	7.85
172.	10/07	770 343-8692 ALPHARETTA GA	914 268-7478 CONGERS NY	ADC	11:22AM	39	16.25
173.	10/07	770 343-8692 ALPHARETTA GA	802 384-1824 DORSET VT	ADC	12:02PM	19	8.25
174.	10/07	770 343-8692 ALPHARETTA GA	787 724-8678 SAN JUAN PR	ADC	04:28PM	2	1.45
175.	10/07	770 343-8692 ALPHARETTA GA	787 723-6793 SAN JUAN PR	AEC	07:40PM	14	6.25
176.	10/07	770 343-8692 ALPHARETTA GA	561 832-9761 WPALMBEACH FL	BEC	10:37PM	13	5.85
177.	10/07	770 343-8692 ALPHARETTA GA	305 374-3131 MIAMI FL	BEC	10:50PM	4	2.25
178.	10/07	770 343-8692 ALPHARETTA GA	305 361-7466 MIAMI FL	BEC	10:55PM	3	1.85

* Taxes and Rates Applied - See Back of First Page

HB E043885

(continued)▶

For AT&T Billing Questions, Call 1 800 325-0138

Detailed Statement of Charges

Itemized Calls (continued)

305 374-0497 (continued)

Calling Card Calls (continued)

Date	Called From	Called To	Rate*	Time	Min	Amount
Card 3053 (continued)						
191. 10/10	843 681-6490 HILTONHEAD SC	305 651-4811 WRONG NUMB	BNC	02:14PM	1	1.05CREDIT
192. 10/10	843 681-6490 HILTONHEAD SC	305 651-4811 NORTH DADE FL	BNS	02:15PM	1	2.65
193. 10/10	904 296-3700 JACKSONVL FL	305 361-7466 MIAMI FL	HNC	07:26PM	2	1.45
194. 10/10	904 296-1245 JACKSONVL FL	305 361-8286 MIAMI FL	HNC	07:29PM	1	1.20
195. 10/10	904 296-1261 JACKSONVL FL	305 389-8286 MIAMI FL	HNC	07:30PM	1	1.20
196. 10/10	904 296-1506 JACKSONVL FL	860 399-6620 OLD SAYBRK CT	BNC	07:33PM	2	1.45
197. 10/10	904 296-1736 JACKSONVL FL	787 724-0182 SAN JUAN PR	BNC	07:36PM	2	1.45
198. 10/10	904 296-3417 JACKSONVL FL	787 785-3854 BAYAMON PR	BNC	07:39PM	33	13.85
199. 10/10	904 296-1506 JACKSONVL FL	843 681-6490 HILTONHEAD SC	BNC	08:18PM	10	4.65
200. 10/10	904 296-1736 JACKSONVL FL	305 361-8286 MIAMI FL	HNC	08:28PM	1	1.20
201. 10/10	904 296-2809 JACKSONVL FL	305 361-7466 MIAMI FL	HNC	08:29PM	7	2.70
202. 10/10	904 296-3700 JACKSONVL FL	051 156-4554 PERU	BRC	08:50PM	1	6.09

* Taxes and Rates Applied - See Back of First Page

(continued)▶

AT&T

ABA PROFSNL ASSOC
Account Number: 305 374-0838 360 0441
Bill Period Date: Oct 14, 1998

For AT&T Billing Questions, Call 1 800 325-0138

Detailed Statement of Charges

Itemized Calls (continued)	*Amount*
305 374-0497 (continued)	
The above total does not include the following taxes:	
Federal Tax	$27.04
State/Local Tax	$39.94
Florida Gross Receipts Surcharge	$12.19

AT&T

ABA PROFSNL ASSOC
Account Number: 305 374-0838 360 0441
Bill Period Date: Oct 14, 1998

For AT&T Billing Questions, Call 1 800 325-0138

Detailed Statement of Charges

Itemized Calls (continued) — *Amount*

305 374-7246 (continued)

Direct Dialed Calls (continued)

	Date	Place Called	Number Called	Rate*	Time	Min	Amount
243.	09/29	ALAMEDA CA	510 523-0273	BD V	03:45PM	1	.37
244.	09/29	LUMBERTON NC	910 739-4357	BD V	04:46PM	6	2.19
245.	09/30	WILLIAMSVL NY	716 633-3600	BD V	03:37PM	3	1.10
246.	09/30	ALAMEDA CA	510 523-0273	BD V	04:31PM	1	.37
247.	09/30	TORONTO ON	416 410-0533	BR U	05:07PM	2	1.86
248.	10/01	READING PA	610 370-3669	BD V	02:52PM	1	.37
249.	10/01	GREENHILLS PA	610 855-5851	BD V	02:53PM	1	.37
250.	10/01	WEEKICHSPG FL	352 686-1523	HE V	07:11PM	2	.25
251.	10/02	BESSEMER MI	906 663-4785	BD V	04:16PM	3	1.10
252.	10/02	WEEKICHSPG FL	352 686-1523	HE V	08:29PM	42	4.82
253.	10/05	ALAMEDA CA	510 523-0273	BD V	05:06PM	2	.73
254.	10/06	LUMBERTON NC	910 739-4357	BD V	04:28PM	2	.73
255.	10/06	LUMBERTON NC	910 739-4357	BD V	05:31PM	1	.37
256.	10/06	LUMBERTON NC	910 739-4357	BD V	05:49PM	37	13.45
257.	10/07	ALAMEDA CA	510 523-0273	BD V	05:39PM	5	1.82
258.	10/07	ALAMEDA CA	510 523-0273	BE V	08:45PM	5	1.82
259.	10/07	BOISE ID	208 323-2551	BE Q	09:25PM	30	10.91

Total Direct Dialed Calls 171.46

Total Charges for 305 374-7246 ..... 171.46

The above total does not include the following taxes:

Federal Tax $5.27

State/Local Tax $12.87

Florida Gross Receipts Surcharge $4.37

Total Itemized Calls 1,061.17

* Taxes and Rates Applied - See Back of First Page

HB E043885

(continued)▶

** TELECOM*USA **

ABA PROFSNL ASSOC
Account Number: 305 374-0838 360 0441
Bill Period Date: Oct 14, 1998

For TELECOM*USA Billing Questions, Call 1 800 945-6500

Detailed Statement of Charges

Itemized Calls						*Amount*
305 374-7246						
*Service Provider - TELECOM*USA-CENTRAL*						
Direct Dialed Calls						
	Date	*Place Called*	*Number Called*	*Rate**	*Time*	*Min*
1.	09/24	220TURKEY	902626433850	BY	06:58PM	6	7.44
Total Direct Dialed Calls						7.44
Total Charges for 305 374-7246						7.44
The above total does not include the following taxes:						
Federal Tax					$0.23	
State/Local Tax					$0.55	
Florida Gross Receipts Surcharge					$0.18	
Total Itemized Calls						7.44

Taxes	*Amount*
Taxes on Regulated Services	
2. Federal Tax	.23
3. State Tax	.55
4. Florida Gross Receipts Surcharge	.18
Total Taxes on Regulated Services	.96
Total Taxes	.96

Total TELECOM*USA Current Charges 8.40

* Taxes and Rates Applied - See Back of First Page

This portion of your bill is provided as a service to TELECOM*USA.

There is no connection between BellSouth and TELECOM*USA.

HB E043885

(continued)▶

BELLSOUTH

ABA PROFSNL ASSOC
Account Number: 305 374-0838 360 0441
Bill Period Date: Dec 14, 1998
CKT: 70.IBSD.512986..SB

Thank you for choosing BellSouth. We sincerely appreciate your business.

Summary of Charges

	Amount
Previous Charges	
Amount of Last Bill	4,499.85
Less Payments	* 1,783.89CREDIT
Balance - Thank You for Your Payment	2,715.96
Current Charges	
BellSouth	
Monthly Service Charges	300.35
Local Usage	36.16
Other Charges and Credits	226.83
Itemized Calls	1.20
Taxes	86.12
Total Current Charges for BellSouth Companies	650.66
Charges for Other Companies	838.00
Total Current Charges Due Before Jan 5	1,488.66
Total Amount Due (See Messages for Charges Under Investigation)	4,204.62

Important Notice(s)

Late Charge Reminder: A 1.5% Late Payment Charge will apply to any unpaid balance as of Jan 15.

Nonpayment of Regulated Charges may result in discontinuance of service. Failure to pay unregulated and certain other charges, all of which are identified by ** on your bill, will not result in an interruption of local service. The amount of Regulated Charges may be obtained by calling 1 800 858-9413.

(continued on page 2) ▶

***** PLEASE FOLD, TEAR HERE AND RETURN THIS PORTION WITH YOUR PAYMENT. *****

Please make check payable to BellSouth in U.S. funds.

CURRENT CHARGES DUE BEFORE	PAST DUE AMOUNT	TOTAL AMOUNT DUE	AMOUNT PAID
Jan 5	$2,715.96	$4,204.62	

305 374-0838 360 0441
Dec 14, 1998
AV 0112 B01 A001493

☐ Check here if correspondence included.

#001493 2 AV 0.46

P.O. BOX 70807
CHARLOTTE NC
28272-0807

ABA PROFSNL ASSOC
801 BRICKELL BAY DR
SUIT 662
MIA FL 33131-2937

305937408383600440112802010841100000000000271596000042046 2

BELLSOUTH

ABA PROFSNL ASSOC
Account Number: 305 374-0838 360 0441
Bill Period Date: Dec 14, 1998

Helpful Numbers

BellSouth Telecommunications, Inc. (BST)
NOTE: Numbers for other companies are listed on their bill pages.

Billing Questions or to Place an Order:
If calling from within the Florida BellSouth service area 1 800 858-9413
If calling from outside Florida or outside the Florida BellSouth service area 1 800 858-9413

Repair:
If calling from within the Florida BellSouth service area 780-2222

Detailed Statement of Charges

Monthly Service Charges — *Amount*

Monthly Service - Dec 14 thru Jan 13

Basic Services	*Quantity*	*Unit Charge*	
1. Emergency 911 Charge. This charge is billed on behalf of Dade County.	1 ...	# **	1.50
2. FCC Charge for Interstate Toll Access	3 ...	5.00	15.00
3. Telecommunications Access System Act Surcharge	3 ...	.11 **	.33
Total Basic Services			16.83
Optional Services	*Quantity*	*Unit Charge*	
4. Call Fwd Busy Line per User for Voice or Voice/Data (ISDN)	1 ...	2.50	2.50
5. Call Fwd Don't Answer per User for Voice or Voice/Data	1 ...	2.50	2.50
6. ISDN B Channel Threshold Voice/Data	6 ...	16.25	97.50
7. ISDN Threshold Pricing, Basic Rate DSL Access Arrangement, Business	3 ...	55.00	165.00
8. FCC Charge for Excess Line Port for Basic Rate ISDN Digital Subscriber Line	3 ...	2.44	7.32
9. MemoryCall® Answering Service, Personal/Extension Mailbox	1 ...	7.95 **	7.95
10. Message Waiting - Stutter Dialtone	1 ...	.75	.75
Total Optional Services			283.52
Total Monthly Service Charges			300.35

Local Usage — *Amount*

Local Usage Summary for 305 374-0838

ISDN Usage Summary

Calls	Total Mins	Cost/Min	Charges
1467	3782	.010	37.82
	Usage Allowance		576.00CREDIT

11. Local Usage Summary ..... .00

Local Usage Summary for 305 374-0838

Local Measured Usage to the Expanded Area

Calls	Total Mins	Charges-
8	41	2.78

12. Local Usage Summary 2.78

Quantity and/or Unit Charge may not apply
** Unregulated Charge

AV A001493

(continued)▶

BELLSOUTH

ABA PROFSNL ASSOC
Account Number: 305 374-0838 360 0441
Bill Period Date: Dec 14, 1998

Detailed Statement of Charges

Itemized Calls — *Amount*

305 374-7246

Direct Dialed Calls

	Date	Place Called	Number Called	Rate*	Time	Min	Amount
27.	12/09	BOYNTONBCH FL	561 369-7000	HD	11:15AM	2.9	.72
28.	12/09	BELLEGLADE FL	561 996-4930	HD	11:18AM	0.6	.14
29.	12/09	WPALMBEACH FL	561 881-4600	HD	11:19AM	0.9	.22
30.	12/09	WPALMBEACH FL	561 439-8006	HD	11:21AM	0.3	.12

Total Direct Dialed Calls 1.20
Total Charges for 305 374-7246 ..... 1.20
The above total does not include the following taxes:
Federal Tax $0.04
State/Local Tax $0.18
Florida Gross Receipts Surcharge $0.01
Total Itemized Calls 1.20

Taxes — *Amount*

Taxes on Regulated Services

31. Federal Tax 10.28
32. State/Local Tax 39.55
33. Florida Gross Receipts Surcharge 3.57
34. City Tax 22.85
35. Franchise Charge 9.35

Total Taxes on Regulated Services 85.60

Taxes on Unregulated Services

36. State/Local Tax ..... ** .52

Total Taxes on Unregulated Services ..... .52
Total Taxes 86.12

Total BellSouth Current Charges 650.66

Messages

On May 16, 1997, the FCC ordered reductions in access charges BellSouth assesses long distance companies. These charges help recover the costs of the telephone lines from BellSouth's switching offices to our customers' premises. The FCC's order was designed to promote competition in the telecommunications industry while lowering long distance rates. To offset the reduction in access charges, BellSouth was authorized to increase federal Subscriber Line Charges for residential and business Basic Rate ISDN service and residential Additional Lines. Initially, these changes began January 1, 1998. The next rate increase will be effective January 1, 1999, and will be reflected on January/February 1999 bills.

* Taxes and Rates Applied - See Back of First Page
** Unregulated Charge

(continued)▶

AT&T

ABA PROFSNL ASSOC
Account Number: 305 374-0838 360 0441
Bill Period Date: Dec 14, 1998

For AT&T Billing Questions, Call 1 800 325-0138

Detailed Statement of Charges

Itemized Calls — *Amount*

305 374-0838

Direct Dialed Calls

	Date	Place Called	Number Called	Rate*	Time	Min	Amount
1.	11/20	NASSAU BA	242 323-8448	BR	03:10PM	2	2.70
2.	12/02	NEW YORK NY	212 262-6040	BD	05:22PM	1	.37

Total Direct Dialed Calls 3.07

Total Charges for 305 374-0838 ..... 3.07

The above total does not include the following taxes:

Federal Tax $0.09
State/Local Tax $0.22
Florida Gross Receipts Surcharge $0.07

305 374-0497

Direct Dialed Calls

	Date	Place Called	Number Called	Rate*	Time	Min	Amount
3.	11/06	ALPHARETTA GA	770 708-5593	BD	01:23PM	1	.37
4.	11/11	ALPHARETTA GA	770 708-5593	BD	12:40PM	2	.73
5.	11/13	BEAVERTON OR	503 574-1542	BD	08:49AM	1	.37
6.	11/13	BEAVERTON OR	503 574-1542	BD	08:53AM	1	.37
7.	11/13	BEAVERTON OR	503 574-1542	BD	04:03PM	1	.37
8.	11/17	WASHINGTON DC	202 418-2644	BD	11:05AM	1	.37
9.	11/23	ORLANDO FL	407 841-4059	HD	02:20PM	13	2.04
10.	11/24	ALPHARETTA GA	770 708-5593	BD	03:45PM	1	.37
11.	11/27	CAYMAN IS CQ	345 945-6415	BR	07:10PM	2	3.64
12.	11/30	CAYMAN IS CQ	345 945-6415	BR	06:56PM	2	3.64
13.	12/02	CAYMAN IS CQ	345 945-6415	BY	05:41AM	2	3.64
14.	12/02	CAYMAN IS CQ	345 945-6415	BY	05:43AM	1	1.82
15.	12/03	CAYMAN IS CQ	345 945-6415	BR	07:28AM	1	1.82
16.	12/03	CAYMAN IS CQ	345 945-6415	BR	07:31AM	3	5.46
17.	12/03	ORANGE CA	714 938-2534	BD	10:22AM	1	.37
18.	12/04	ALAMEDA CA	510 523-3233	BD	12:06PM	1	.37
19.	12/04	SANTA ANA CA	714 708-1025	BD	05:06PM	2	.73
20.	12/07	LOGAN UT	435 750-1496	BD	11:02AM	1	.37

Total Direct Dialed Calls 26.85

Calling Card Calls

	Date	Called From	Called To	Rate*	Time	Min	Amount
Card 3053							
21.	11/12	773 472-7448 CHICAGO IL	787 724-0182 SAN JUAN PR	ADC	09:46AM	2	1.55
22.	11/12	773 472-7448 CHICAGO IL	787 723-7586 SAN JUAN PR	ADC	09:49AM	1	1.10
23.	11/12	773 472-7448 CHICAGO IL	212 535-1468 NEW YORK NY	ADC	09:57AM	30	14.45

* Taxes and Rates Applied - See Back of First Page

(continued)▶

AT&T

ABA PROFSNL ASSOC
Account Number: 305 374-0838 360 0441
Bill Period Date: Dec 14, 1998

For AT&T Billing Questions, Call 1 800 325-0138

Detailed Statement of Charges

Itemized Calls (continued) — *Amount*

305 374-0497 (continued)

Calling Card Calls (continued)

Date	Called From	Called To	Rate*	Time	Min	Amount
Card 3053 (continued)						
44. 11/14	773 472-7448 CHICAGO IL	787 785-3854 BAYAMON PR	ANC	04:47PM	13	6.50
45. 11/16	773 281-2698 CHICAGO IL	051 156-4554 PERU	ATC	10:37AM	21	36.48
46. 11/16	773 281-2698 CHICAGO IL	802 362-4450 MANCHESTER VT	ADC	10:59AM	1	1.40
47. 11/16	773 281-2698 CHICAGO IL	787 746-0301 CAGUAS PR	AEC	06:54PM	24	11.45
48. 11/16	773 281-2698 CHICAGO IL	787 723-6793 SAN JUAN PR	AEC	07:19PM	29	13.70
49. 11/16	773 281-2698 CHICAGO IL	802 362-4450 MANCHESTER VT	AEC	07:53PM	2	1.85
50. 11/16	773 281-2698 CHICAGO IL	787 724-0182 SAN JUAN PR	AEC	09:45PM	1	1.10
51. 11/16	773 281-2698 CHICAGO IL	305 361-7466 MIAMI FL	BNC	11:08PM	2	1.85
52. 11/17	773 281-2698 CHICAGO IL	051 156-4554 PERU	ATC	10:09AM	1	5.88
53. 11/17	773 281-2698 CHICAGO IL	802 362-4450 MANCHESTER VT	ADC	10:11AM	1	1.40
54. 11/17	773 281-2698 CHICAGO IL	051 156-4554 PERU	ATC	11:16AM	32	53.31
55. 11/17	773 472-7448 CHICAGO IL	305 265-7576 MIAMI FL	BDC	01:16PM	8	4.55
56. 11/17	773 472-7448 CHICAGO IL	305 361-7466 MIAMI FL	BDC	01:27PM	22	10.85
57. 11/17	773 472-7448 CHICAGO IL	305 374-4567 MIAMI FL	BDC	02:46PM	1	1.40
58. 11/17	773 472-7448 CHICAGO IL	305 265-7576 MIAMI FL	BDC	02:49PM	2	1.85
59. 11/17	773 472-7448 CHICAGO IL	787 250-6196 RIOPIEDRAS PR	ADC	02:52PM	1	1.10
60. 11/17	773 472-7448 CHICAGO IL	787 724-0182 SAN JUAN PR	ANC	11:53PM	2	1.55
61. 11/18	773 472-7448 CHICAGO IL	305 255-8822 PERRINE FL	BDC	10:42AM	1	1.40
62. 11/18	773 472-7448 CHICAGO IL	540 943-9979 WAYNESBORO VA	ADC	10:44AM	24	11.75
63. 11/18	773 281-2698 CHICAGO IL	802 362-4450 MANCHESTER VT	ADC	12:26PM	1	1.40

* Taxes and Rates Applied - See Back of First Page

(continued)▶

AT&T

ABA PROFSNL ASSOC
Account Number: 305 374-0838 360 0441
Bill Period Date: Dec 14, 1998

For AT&T Billing Questions, Call 1 800 325-0138

Detailed Statement of Charges

Itemized Calls (continued)

305 374-7246 (continued)

Direct Dialed Calls (continued)

	Date	Place Called	Number Called	Rate*	Time	Min	Amount
88.	11/27	CAYMAN IS CQ	345 945-6500	BR	05:57PM	1	1.82
89.	11/27	GEORGETOWN CQ	345 916-0730	BR	06:27PM	1	1.82
90.	11/29	WEEKICHSPG FL	352 686-1523	HN	10:18PM	19	2.19
91.	11/29	WEEKICHSPG FL	352 686-1523	HN	10:39PM	3	.36
92.	11/30	CAYMAN IS CQ	345 945-6414	BR	06:20PM	34	61.88
93.	11/30	CAYMAN IS CQ	345 945-6414	BR	06:54PM	29	52.78
94.	11/30	NASSAU BA	242 323-8448	BR	07:27PM	1	1.35
95.	11/30	NEWPROVDNC BA	242 356-7411	BR	07:28PM	18	24.30
96.	12/01	NEWPROVDNC BA	242 356-7411	BY	02:54AM	1	1.35
97.	12/01	ALAMEDA CA	510 523-0273	BD	11:32AM	2	.73
98.	12/01	ALAMEDA CA	510 523-0273	BD	11:42AM	4	1.46
99.	12/02	DIR ASSIST NY	212 555-1212	BD	05:19PM	1	1.40
100.	12/02	NEWPROVDNC BA	242 356-7411	BR	05:21PM	4	5.40
101.	12/05	DIR ASSIST NY	212 555-1212	BD	05:14AM	1	1.40

Total Direct Dialed Calls 242.99

Total Charges for 305 374-7246 ..... 242.99

The above total does not include the following taxes:

Federal Tax	$7.48
State/Local Tax	$17.79
Florida Gross Receipts Surcharge	$6.21

Total Itemized Calls 656.19

Taxes

Taxes on Regulated Services

		Amount
102.	Federal Tax	19.94
103.	State Tax	23.96
104.	Florida Gross Receipts Surcharge	8.42
105.	City Tax	.35

Total Taxes on Regulated Services 52.67

Total Taxes 52.67

Total AT&T Current Charges 708.86

* Taxes and Rates Applied - See Back of First Page

(continued)▶

HOLD

ABA PROFSNL ASSOC
Account Number: 305 374-0838 360 0441
Bill Period Date: Dec 14, 1998

For HOLD Billing Services Billing Questions, Call 1 800 879-4653

Detailed Statement of Charges

Miscellaneous Charges and Credits		*Amount*
305 374-0838		
Service Provider: JET PAGE		
For billing questions, call 1 888 901-9783		
Date		
1. 12/02 INTERNET SVC WEB HOSTING		29.95
305 374-3162		
Service Provider: WEBSOURCE MEDIA		
Date		
2. 11/30 INTERNET SVC WEB HOSTING	**	29.95
3. 11/30 WEB DESIGN SETUP FEE	**	25.00
Total Miscellaneous Charges and Credits		84.90

The above total does not include the following taxes:

State/Local Tax	$4.31
Florida Gross Receipts Surcharge	$0.74
State/Local Tax	$7.89
Florida Gross Receipts Surcharge	$1.37

Taxes		*Amount*
4. State Tax	**	6.11
5. Florida Gross Receipts Surcharge	**	2.11
6. City Tax	**	6.09
Total Taxes on Unregulated Services		14.31
Total Taxes		14.31

Total HOLD Billing Services Current Charges 99.21

** Unregulated Charge

This portion of your bill is provided as a service to HOLD Billing Services.

There is no connection between BellSouth and HOLD Billing Services.

BELLSOUTH

ABA PROFSNL ASSOC
Account Number: 305 374-0838 360 0441
Date: Jan 13, 1999

****
* SEE IMPORTANT NOTICE ENCLOSED *
****

305 374-0838 360 0441
Jan 13, 1999
MT B21 E001118

#001118

ABA PROFSNL ASSOC
801 BRICKELL BAY DR
SUIT 662
MIA FL 33131-2937

BELLSOUTH

ABA PROFSNL ASSOC
Account Number: 305 374-0838 360 0441
Date: Jan 13, 1999

ABA PROFSNL ASSOC
801 BRICKELL BAY DR
SUIT 662
MIA FL 33131

WE HAVE RECEIVED A RESPONSE REGARDING THE DISPUTED CHARGES OF $70.00 FROM HOME OWNERS LONG DISTANCE, INC..

THE ADJUSTMENT HAS NOT BEEN APPROVED DUE TO THE FOLLOWING REASON(S):

_CHARGES IN DISPUTE WERE AUTHORIZED BY MANUEL LORA /

IF YOU HAVE ANY QUESTIONS, PLEASE CONTACT THE HOME OWNERS LONG DISTANCE, INC. BILLING NUMBER SHOWN ON YOUR BELLSOUTH TELEPHONE BILL.

Gay What if anything you Did about this 5/8/99

MT E001118

BELLSOUTH

ABA PROFSNL ASSOC
Account Number: 305 374-0838 360 0441
Bill Period Date: Jan 14, 1999

Thank you for choosing BellSouth. We sincerely appreciate your business.

Summary of Charges

	Amount
Previous Charges	
Amount of Last Bill	4,204.62
Less Payments	.00
Adjustments	4,204.62CREDIT
Balance	.00
Current Charges	
BellSouth	
Other Charges and Credits	2.18
Taxes	.39
Total Current Charges for BellSouth Companies	2.57
Charges for Other Companies	127.63
Total Current Charges Due Before Feb 5	130.20
Total Amount Due	130.20

Important Notice(s)

Late Charge Reminder: A 1.5% Late Payment Charge will apply to any unpaid balance as of Feb 15.

Nonpayment of Regulated Charges may result in discontinuance of service. Failure to pay unregulated and certain other charges, all of which are identified by ** on your bill, will not result in an interruption of local service. The amount of Regulated Charges may be obtained by calling 1 800 858-9413.

Helpful Numbers

BellSouth Telecommunications, Inc. (BST)

NOTE: Numbers for other companies are listed on their bill pages.

Billing Questions or to Place an Order:	
If calling from within the Florida BellSouth service area	1 800 858-9413
If calling from outside Florida or outside the Florida BellSouth service area	1 800 858-9413

(continued on page 2) ▶

BELLSOUTH

ABA PROFSNL ASSOC
Account Number: 305 374-0838 360 0441
Bill Period Date: Jan 14, 1999

Helpful Numbers (continued)

BellSouth Telecommunications, Inc. (BST)

NOTE: Numbers for other companies are listed on their bill pages.

Repair:
If calling from within the Florida BellSouth service area 780-2222

Detailed Statement of Charges

Local Usage — *Amount*

Local Usage Summary for 305 374-0838

ISDN Usage Summary

Calls	Total Mins	Cost/Min	Charges
45	23	.010	.23
	Usage Allowance		76.80CREDIT

1. Local Usage Summary	.00
Total Local Usage	.00

Other Charges and Credits — *Amount*

Directory Assistance (DA) Usage

2. 1 Call(s) to Local DA at No Charge	.00
3. 1 Call(s) to 555-1212 at $0.48 Each	.48
4. 2 Call(s) to National DA at $0.85 Each	1.70
Total Other Charges and Credits	2.18

Taxes — *Amount*

Taxes on Regulated Services

5. Federal Tax	.06
6. State Tax	.17
7. Florida Gross Receipts Surcharge	.01
8. City Tax	.15
Total Taxes on Regulated Services	.39
Total Taxes	.39

Total BellSouth Current Charges 2.57

Detail of Adjustments

Listed below is a summary of the Adjustments, found on page 1 of the bill.
These adjustments are shown by date and the company making the adjustment.

	Date Adjusted	*Company*	*Adjustment*
9.	Dec 17, 1998	BELLSOUTH TELECOMMUNICATIONS	62.48CREDIT
10.	Dec 17, 1998	BELLSOUTH TELECOMMUNICATIONS	276.64CREDIT
11.	Dec 17, 1998	BELLSOUTH TELECOMMUNICATIONS	23.11CREDIT
12.	Dec 17, 1998	BELLSOUTH TELECOMMUNICATIONS	591.93CREDIT
13.	Dec 17, 1998	BELLSOUTH TELECOMMUNICATIONS	40.52CREDIT
14.	Dec 24, 1998	BELLSOUTH TELECOMMUNICATIONS	3,209.94CREDIT
15.	Dec 28, 1998	BELLSOUTH TELECOMMUNICATIONS	144.76CREDIT
16.	Dec 28, 1998	BELLSOUTH TELECOMMUNICATIONS	144.76
17.	Jan 8, 1999	BELLSOUTH TELECOMMUNICATIONS	62.48CREDIT
18.	Jan 8, 1999	BELLSOUTH TELECOMMUNICATIONS	62.48
19.	Jan 8, 1999	BELLSOUTH TELECOMMUNICATIONS	276.64CREDIT

(continued)▶

AT&T

ABA PROFSNL ASSOC
Account Number: 305 374-0838 360 0441
Bill Period Date: Jan 14, 1999

For AT&T Billing Questions, Call 1 800 325-0138

Detailed Statement of Charges

Itemized Calls — *Amount*

305 374-0838

Direct Dialed Calls

	Date	Place Called	Number Called	Rate*	Time	Min	Amount
1.	12/09	NEW YORK NY	212 594-3322	BD	06:27PM	2	.73
2.	12/10	NEW YORK NY	212 594-3322	BD	02:20PM	1	.37
3.	12/10	NEW YORK NY	212 594-3322	BD	02:45PM	3	1.10
4.	12/10	CAYMAN IS CQ	345 945-6414	BR	02:57PM	1	1.82
5.	12/14	STPETERSBG FL	727 367-6461	HE	09:38PM	30	3.45
6.	12/15	DIR ASSIST LA	504 555-1212	BD	09:09AM	1	1.40
7.	12/15	ATLANTA GA	404 876-1227	BD	09:18AM	1	.37
8.	12/15	NEWORLEANS LA	504 734-1000	BD	09:19AM	1	.37
9.	12/15	BIRMINGHAM AL	205 879-8709	BD	09:20AM	1	.37
10.	12/15	NORMAN OK	405 321-8333	BD	06:26PM	21	7.64
11.	12/15	NORMAN OK	405 321-8333	BDM	06:58PM	24	8.73
12.	12/15	NEWPROVDNC BA	242 356-7411	BR	07:30PM	7	9.45
13.	12/17	DAYTONABCH FL	904 255-8131	HD	11:02AM	3	.49
14.	12/17	EAU GALLIE FL	407 242-7555	HD	11:05AM	4	.64
15.	12/17	NASSAU BA	242 323-6453	BR	12:46PM	11	14.85
16.	12/17	NASSAU BA	242 328-3176	BR	12:59PM	9	12.15
17.	12/17	NASSAU BA	242 323-8127	BR	03:04PM	1	1.35
18.	12/18	STPETERSBG FL	727 820-0059	HD	01:09PM	1	.18
19.	12/18	ATLANTA GA	404 330-6210	BD	02:38PM	8	2.91
20.	12/18	NEWPROVDNC BA	242 377-2056	BR	03:21PM	2	2.70
21.	12/18	NEWPROVDNC BA	242 377-2056	BR	05:05PM	2	2.70

Total Direct Dialed Calls 73.77

Total Charges for 305 374-0838 ..... 73.77

The above total does not include the following taxes:

Federal Tax	$2.27
State/Local Tax	$5.75
Florida Gross Receipts Surcharge	$1.88

Total Itemized Calls 73.77

Taxes — *Amount*

Taxes on Regulated Services

22.	Federal Tax	2.27
23.	State Tax	5.41
24.	Florida Gross Receipts Surcharge	1.88
25.	City Tax	.34

Total Taxes on Regulated Services 9.90

Total Taxes 9.90

Total AT&T Current Charges 83.67

* Taxes and Rates Applied - See Back of First Page

This portion of your bill is provided as a service to AT&T. There is no connection between BellSouth and AT&T. You may choose another company for your long distance telephone calls while still receiving your local telephone service from BellSouth.

HOLD

ABA PROFSNL ASSOC
Account Number: 305 374-0838 360 0441
Bill Period Date: Jan 14, 1999

For HOLD Billing Services Billing Questions, Call 1 800 879-4653

Detailed Statement of Charges

Miscellaneous Charges and Credits		*Amount*
305 374-3162		
Service Provider - JET PAGES		
For billing questions, call 1 888 901-9783		
Date		
1. 12/09 WEB DESIGN SETUP FEE	**	29.95
Total Miscellaneous Charges and Credits		29.95

The above total does not include the following taxes:

State/Local Tax	$4.31
Florida Gross Receipts Surcharge	$0.74

Taxes		*Amount*
2. State Tax	**	2.16
3. Florida Gross Receipts Surcharge	**	.74
4. City Tax	**	2.15
Total Taxes on Unregulated Services		5.05
Total Taxes		5.05

Total HOLD Billing Services Current Charges	35.00

5/8/99
Did this when they Do stop Rec'd.

** Unregulated Charge

This portion of your bill is provided as a service to HOLD Billing Services.

There is no connection between BellSouth and HOLD Billing Services.

BELLSOUTH

No Document Payment Receipt

RF-9343
(11-96)

Area Code	Telephone Number	Customer Code	Check Digit
305	374-0838	360	

Billing Name: NSA Travel Group

Street Address: 701 Brickell Bay Ap. #662

City: Miami | State: Fl | Zip Code: 33131

Please Check One

- [X] Payment $ 500.00
- [ ] Deposit $
- ID Type & Number: 305 374 0838
- [ ] Advance Payment $

Thank You

Thank You ...

We Appreciate Your Business!

Your payment will be posted to your BellSouth account within seconds.

SEARS ADVENTR 2
36F PA P 0442 12/01/98 -$500.00 CK
PAYM 305-374-0838-360 0441

*In order to save time in the future, please bring your telephone bill.... or you may **Mail Your Payment**.*

Ply 1 - Customer's Copy

Ply 2 - Agency's Copy

BELLSOUTH

No Document Payment Receipt

RF-9343 (11-96)

Area Code	Telephone Number	Customer Code	Check Digit
305	374 · 0838	360	

Billing Name: ABA PROFESSIONAL

Street Address: 1101 BRICKELL AVE

City	State	Zip Code
MIAMI	Fl.	33231

Please Check One

- [x] Payment $ 1283.89
- [ ] Deposit $
  ID Type & Number
- [ ] Advance Payment $

12/8/98

Thank You ...

We Appreciate Your Business!

Your payment will be posted to your BellSouth account within seconds.

*In order to save time in the future, please bring your telephone bill.... or you may **Mail Your Payment**.*

SEARS CHL SB 2
1GF PA P 0103 12/08/98 $1,283.89 CKM
PAYM 305-374-0838 360 0441

Ply 1 - Customer's Copy

Ply 2 - Agency's Copy

BELLSOUTH

ABA PROFSNL ASSOC
Account Number: 305 374-0838 360 0441
Bill Period Date: Dec 14, 1998
CKT: 70.IBSD.512986..SB

Thank you for choosing BellSouth. We sincerely appreciate your business.

Summary of Charges

	Amount
Previous Charges	
Amount of Last Bill	4,499.85
Less Payments	* 1,783.89CREDIT
Balance - Thank You for Your Payment	2,715.96
Current Charges	
BellSouth	
Monthly Service Charges	300.35
Local Usage	36.16
Other Charges and Credits	226.83
Itemized Calls	1.20
Taxes	86.12
Total Current Charges for BellSouth Companies	650.66
Charges for Other Companies	838.00
Total Current Charges Due Before Jan 5	1,488.66
Total Amount Due (See Messages for Charges Under Investigation)	4,204.62

Important Notice(s)

Late Charge Reminder: A 1.5% Late Payment Charge will apply to any unpaid balance as of Jan 15.

Nonpayment of Regulated Charges may result in discontinuance of service. Failure to pay unregulated and certain other charges, all of which are identified by ** on your bill, will not result in an interruption of local service. The amount of Regulated Charges may be obtained by calling 1 800 858-9413.

(continued on page 2) ▶

***** PLEASE FOLD, TEAR HERE AND RETURN THIS PORTION WITH YOUR PAYMENT. *****

Please make check payable to BellSouth in U.S. funds.

CURRENT CHARGES DUE BEFORE	PAST DUE AMOUNT	TOTAL AMOUNT DUE	AMOUNT PAID
Jan 5	$2,715.96	$4,204.62	

305 374-0838 360 0441
Dec 14, 1998
AV 0112 B01 A001493

☐ Check here if correspondence included.

#001493 2 AV 0.46

P.O. BOX 70807
CHARLOTTE NC
28272-0807

ABA PROFSNL ASSOC
801 BRICKELL BAY DR
SUIT 662
MIA FL 33131-2937

305937408383600440112802010841100000000000271596000042046 2

BELLSOUTH

SEARS/AVENTURA

3GF 0013 0374 01/26/99 19:20

Payment	305 3740838 360	$64.96
Check		($32.48)
Check	Pay Balance	($32.48)
Total Amount Paid:		$64.96

We Appreciate Your Business!

Your payment will post to your
BellSouth account within minutes

THANK YOU

Thank you for choosing BellSouth to help you learn the True Nature of customer service.

BELLSOUTH®
Nobody knows a neighbor like a neighbor.

Small Business Services
675 West Peachtree Street, Suite 27D55
Atlanta, GA 30375

A BA Travel Group *
801 Brickell Bay Dr, Ste 662
Miami FL 33131

Dear Valued Small Business Customer:

Thank you for your recent purchase of:

- Message Waiting Indicator

We're confident that by taking advantage of BellSouth's products and services, your business will learn the True Nature of customer service.

To show our appreciation for selecting BellSouth to help you learn the True Nature of customer service, we're giving you $19.75 cash back on your entire purchase. Simply detach the check from the bottom of this letter.

You can count on BellSouth to provide solutions that will address your business telecommunications and customer needs - today and in the future. If you have any questions about your purchase, or if you'd like to learn more about other products and services available to you, please call your BellSouth Small Business Specialist at 780-2885.

PD 1/26/99
CK 1102
$ 32.48
CERT: $ 19.75
TOTAL $ 52.23

Sincerely,

Mark Prol
Team Leader, Product Management

45.49
19.75
65.24

130.20
65.24
64.96

0000251 BSBLE185 L11860.01

BSBLE185
BSBLE185

9814025443
64-975
612

BELLSOUTH®

DATE January 22, 1999

PAY TO THE ORDER OF A BA Travel Group * $19.75

AMOUNT Nineteen Dollars and 75/100 DOLLARS

FIRST UNION NATIONAL BANK OF GEORGIA
VALDOSTA, GA

EXPIRES 150 DAYS FROM DATE ISSUED

A BA Travel Group *
CUSTOMER NAME

305 374-0838 360
CUSTOMER ACCOUNT NUMBER

Carol Soler
AUTHORIZED SIGNATURE

3536688 -

HOLDER IS RESPONSIBLE FOR LOSS, THEFT OR DESTRUCTION. Check cannot be replaced.
All applicable sales taxes will be computed on the full sales price of any taxable service or services for which credit is allowed, and no tax will be added to the amount credited under this program.

BELLSOUTH

CKT: 70.IBSD.512406..SB Page 1
ABA PROFSNL ASSOC
Account Number: 305 374-0838 559 0448
Bill Period Date: Sep 14, 1998

Thank you for choosing BellSouth. We sincerely appreciate your business.

Summary of Charges

	Amount
Previous Charges	
Amount of Last Bill	.00
Less Payments	.00
Balance	.00
Current Charges	
Charges for BellSouth Companies	254.12
Charges for Other Companies	.00
Total Current Charges Due Before Oct 6	254.12
Total Amount Due	254.12

Important Notice(s)

Please note: See Welcome Message following the BellSouth Current Charges.

Late Charge Reminder: A 1.5% Late Payment Charge will apply to any unpaid balance as of Oct 15.

(continued on page 2) ▶

***** PLEASE FOLD, TEAR HERE AND RETURN THIS PORTION WITH YOUR PAYMENT. *****

Please make check payable to BellSouth in U.S. funds.

CURRENT CHARGES DUE BEFORE	PAST DUE AMOUNT	TOTAL AMOUNT DUE	AMOUNT PAID
Oct 6	$0.00	$254.12	

305 374-0838 559 0448
Sep 14, 1998
HB 1105 B01 E044128

☐ **Check here if correspondence included.**

P.O. BOX 33009
CHARLOTTE NC
28243-0001

ABA PROFSNL ASSOC
801 BRICKELL BAY DR
SUIT 662
MIA FL 33131-2937

305937408385590441105802010571100000000000000000000025412

BELLSOUTH

ABA PROFSNL ASSOC
Account Number: 305 374-0838 559 0448
Bill Period Date: Sep 14, 1998

Important Notice(s) (continued)

Nonpayment of Regulated Charges may result in discontinuance of service. Failure to pay unregulated and certain other charges, all of which are identified by ** on your bill, will not result in an interruption of local service. The amount of Regulated Charges may be obtained by calling 1 800 945-6500.

Helpful Numbers

BellSouth Telecommunications, Inc. (BST)

NOTE: Numbers for other companies are listed on their bill pages.

Billing Questions or to Place an Order:	
If calling from within the Florida BellSouth service area	1 800 945-6500
If calling from outside Florida or outside the Florida BellSouth service area	1 800 753-7289
Repair:	
If calling from within the Florida BellSouth service area	1 800 247-2020
Text Telephone (TTY) Users 7:00 AM - 7:00 PM (CST) Monday - Friday:	
If calling from within the Florida BellSouth service area	305 780-2274
If calling from outside Florida or outside the Florida BellSouth service area	1 800 251-5325

Detailed Statement of Charges

Monthly Service Charges		*Amount*
Monthly Service - Sep 14 thru Oct 13		
Basic Services	*Quantity*	
1. Emergency 911 Charge. This charge is billed on behalf of Dade County.	1 ... **	.50
2. FCC Charge for Interstate Toll Access	1 ...	5.00
3. Telecommunications Access System Act Surcharge	1 ... **	.12
Total Basic Services		5.62
Optional Services	*Quantity*	
4. ISDN B Channel Threshold Voice/Data	2 ...	26.50

** Unregulated Charge

HB E044128

(continued)▶

BELLSOUTH

ABA PROFSNL ASSOC
Account Number: 305 374-0838 559 0448
Bill Period Date: Sep 14, 1998

Detailed Statement of Charges

Other Charges and Credits	*Amount*
Work Completed On Aug 27, 1998	
PON: DOLORES-NORTHN TEL SO: CQ8FVGB6	
374-0838	
Circuit Number: 70.IBSD.512408..SB	
Partial month's charge for service added (08/28/98 - 09/13/98)	
11. 2 ISDN B Channel Threshold Voice/Data ($26.50/mo)	15.02
12. ISDN Threshold Pricing, Basic Rate DSL Access Arrangement, Business ($55.00/mo)	31.17
13. FCC Charge for Excess Line Port for Basic Rate ISDN Digital Subscriber Line ($2.44/mo)	1.38
Charges (08/28/98 - 09/13/98)	
14. FCC Charge for Network Access ($5.00/mo)	2.83
374-3162	
Your InterLATA Long Distance Company for 374-3162 is AT&T	
374-9508	
Your InterLATA Long Distance Company for 374-9508 is AT&T	
374-3162	
Your Local Toll company for 374-3162 is BellSouth Telecommunications Inc	
374-9508	
Your Local Toll company for 374-9508 is BellSouth Telecommunications Inc	
PON: DOLORES-NORTHN TEL SO: NQ2JXJ89	
374-0838	
Your InterLATA Long Distance Company is AT&T	
Your IntraLATA Long Distance Company is BellSouth Telecommunications Inc	
Circuit Number: 70.IBSD.512406..SB	
Charge for new service (08/28/98 - 09/13/98)	
15. 2 ISDN B Channel Threshold Voice/Data ($26.50/mo)	15.02
16. ISDN Threshold Pricing, Basic Rate DSL Access Arrangement, Business ($55.00/mo)	31.17
17. FCC Charge for Excess Line Port for Basic Rate ISDN Digital Subscriber Line ($2.44/mo)	1.38

HB E044128

(continued)▶

BELLSOUTH

ABA PROFSNL ASSOC
Account Number: 305 374-0838 559 0448
Bill Period Date: Sep 14, 1998

Detailed Statement of Charges

Itemized Calls ***Amount***

305 374-0838

Direct Dialed Calls

	Date	Place Called	Number Called	Rate*	Time	Min	
25.	08/28	CALL RETRN		HD	11:19PM	1	.75
26.	08/29	CALL RETRN		HD	03:38PM	1	.75
27.	08/29	CALL RETRN		HD	03:43PM	1	.75
28.	08/29	CALL RETRN		HD	06:15PM	1	.75
29.	08/30	CALL RETRN		HD	01:47AM	1	.75
30.	08/30	CALL RETRN		HD	01:48AM	1	.75
31.	08/30	CALL RETRN		HD	06:51PM	1	.75
32.	09/02	CALL RETRN		HD	11:10AM	1	.75
33.	09/02	CALL RETRN		HD	11:10AM	1	.75
34.	09/02	CALL RETRN		HD	11:30AM	1	.75
35.	09/02	CALL RETRN		HD	11:32AM	1	.75
36.	09/02	CALL RETRN		HD	01:00PM	1	.75
37.	09/02	CALL RETRN		HD	04:30PM	1	.75
38.	09/02	CALL RETRN		HD	05:25PM	1	.75
39.	09/02	CALL RETRN		HD	06:22PM	1	.75
40.	09/02	CALL RETRN		HD	08:37PM	1	.75
41.	09/03	CALL RETRN		HD	04:30PM	1	.75

Total Direct Dialed Calls 12.75

Total Charges for 305 374-0838 ..... 12.75

The above total does not include the following taxes:

Federal Tax $0.39

State/Local Tax $1.93

Florida Gross Receipts Surcharge $0.13

* Taxes and Rates Applied - See Back of First Page

HB E044128

(continued)▶

BELLSOUTH

ABA PROFSNL ASSOC
Account Number: 305 374-0838 559 0448
Bill Period Date: Sep 14, 1998

Messages

We are pleased to have you as a customer and would like to explain our billing policy to help you establish a good credit record with us.

This first bill includes charges for service from Aug 27, 1998 to the date of this bill and one month's service in advance.

Your regular monthly bill is dated the 14th of each month. It is past due if payment is received after the "Current Charges Due Before" date printed on your bill. Payment of your bill before that date will enable you to establish and maintain a good credit record with us.

We are not currently holding a deposit on your account.

Should you have any questions concerning your account, please call 1 800 945-6500.

BellSouth offers an option that provides for the blocking of 976 calls within your area code as well as 1+900 calls. There is no charge for this service.

Your rights to connect wiring to the telephone network have been expanded. This will have no effect on the telephone service of most customers, however. In most cases, customer wire may now be connected to the network by direct access to the telephone wiring at any point on the customer's side of the demarcation point. The demarcation point will in most cases be within 12 inches from where the telephone company wire enters the customer's premises. The telephone company will not, except by agreement, install or maintain new or existing wiring on the customer's side of this point. For more information, call your business office.

HB E044128

BELLSOUTH

CKT: 70.IBSD.512406..SB Page 1
ABA PROFSNL ASSOC
Account Number: 305 374-0838 559 0448
Bill Period Date: Oct 14, 1998

Thank you for choosing BellSouth. We sincerely appreciate your business.

Summary of Charges

	Amount
Previous Charges	
Amount of Last Bill	254.12
Less Payments	.00
Balance	254.12
Current Charges	
Charges for BellSouth Companies	57.53CREDIT
Charges for Other Companies	.00
Total Current Charges Due Before Nov 2	57.53CREDIT
Total Amount Due	196.59

Important Notice(s)

Please note: This is your final bill. See message following the BellSouth Current Charges.

Allen 254.12 (August 27-28)
Payment ~~196.59~~
12/24/98 @ 10:55 AM

(continued on page 2) ▶

***** PLEASE FOLD, TEAR HERE AND RETURN THIS PORTION WITH YOUR PAYMENT. *****

Please make check payable to BellSouth in U.S. funds.

CURRENT CHARGES DUE BEFORE	PAST DUE AMOUNT	TOTAL AMOUNT DUE	AMOUNT PAID
Nov 2	$254.12	$196.59	

305 374-0838 559 0448
Oct 14, 1998
AV 1113 FXX B01 E010666

☐ ~~Check here if~~ correspondence included.

#010666

P.O. BOX 33009
CHARLOTTE NC
28243-0001

ABA PROFSNL ASSOC
801 BRICKELL BAY DR
SUIT 662
MIA FL 33131-2937

30593740838559044999981201052120000000000002541200000019659

BELLSOUTH

ABA PROFSNL ASSOC
Account Number: 305 374-0838 559 0448
Bill Period Date: Oct 14, 1998

Helpful Numbers

BellSouth Telecommunications, Inc. (BST)

NOTE: Numbers for other companies are listed on their bill pages.

Billing Questions or to Place an Order:	
If calling from within the Florida BellSouth service area	1 800 945-6500
If calling from outside Florida or outside the Florida BellSouth service area	1 800 753-7289
Repair:	
If calling from within the Florida BellSouth service area	1 800 247-2020
Text Telephone (TTY) Users 7:00 AM - 7:00 PM (CST) Monday - Friday:	
If calling from within the Florida BellSouth service area	305 780-2274
If calling from outside Florida or outside the Florida BellSouth service area	1 800 251-5325

Detailed Statement of Charges

Other Charges and Credits	*Amount*
1. Late Payment Charge (1.5% of Unpaid Regulated Balance)	3.80
2. Late Payment Charge (1.5% of Unpaid Unregulated Balance) **	.01

Work Completed On Aug 28, 1998
PON: DOLORES-NORTHN TEL SO: DQ57J189
Circuit Number: 70.IBSD.512406..SB

3. Adjustment to cover minimum charge for local service (08/28/98 - 10/13/98) ($88.94/mo)	50.40CREDIT
Total Other Charges and Credits	46.59CREDIT

Taxes	*Amount*
Taxes on Regulated Services	
4. Federal Tax	1.57CREDIT
5. State/Local Tax	3.93CREDIT
6. Florida Gross Receipts Surcharge	.55CREDIT

** Unregulated Charge

AV E010666

(continued)▶

BELLSOUTH

ABA PROFSNL ASSOC
Account Number: 305 374-0838 559 0448
Date: Dec 24, 1998

****
* SEE IMPORTANT NOTICE ENCLOSED *
****

***** PLEASE FOLD, TEAR HERE AND RETURN THIS PORTION WITH YOUR PAYMENT. *****

Please make check payable to BellSouth in U.S. funds.

TOTAL AMOUNT DUE	AMOUNT PAID
$196.59	

305 374-0838 559 0448
Dec 24, 1998
MT B01 E000808

☐ **Check here if correspondence included.**

#000808

P.O. BOX 33009
CHARLOTTE NC
28243-0001

ABA PROFSNL ASSOC
801 BRICKELL BAY DR
SUIT 662
MIA FL 33131-2937

30593740838559044999990201051030000000000000196590000019659

BELLSOUTH

ABA PROFSNL ASSOC

Account Number: 305 374-0838 559 0448
Date: Dec 24, 1998

WE PREVIOUSLY SENT YOU A FINAL BILL FOR YOUR FORMER TELEPHONE SERVICE. OUR RECORDS INDICATE THAT $196.59 IS PAST DUE AND PAYMENT HAS NOT YET BEEN RECEIVED.

UNLESS PAYMENT OR PAYMENT ARRANGEMENTS ARE MADE FOR THE OUTSTANDING BALANCE BY JANUARY 4, 1999 IT WILL BE NECESSARY TO INTERRUPT YOUR PRESENT TELEPHONE SERVICE (374-0497). IF YOUR TELEPHONE SERVICE IS INTERRUPTED, A RESTORATION OF SERVICE CHARGE WILL APPLY AND A NEW OR ADDITIONAL DEPOSIT MAY ALSO BE REQUESTED.

TO ENSURE PROPER CREDIT PLEASE INCLUDE YOUR TELEPHONE NUMBER ON YOUR CHECK OR MONEY ORDER.

IF YOU HAVE ANY QUESTIONS, PLEASE CALL 305 780-2187 FROM INSIDE THE LOCAL AREA OR, 1-800-828-4225 IF DIALING FROM OUTSIDE THE LOCAL AREA.

MT E000808

BELLSOUTH

ABA PROFSNL ASSOC
Account Number: 305 374-0838 559 0448
Bill Period Date: Jan 14, 1999
CKT: 70.IBSD.512406..SB

Thank you for choosing BellSouth. We sincerely appreciate your business.

Summary of Charges

	Amount
Previous Charges	
Amount of Last Bill	196.59
Less Payments	.00
Adjustments	249.81CREDIT
Balance	53.22CREDIT
Current Charges	
BellSouth	
Other Charges and Credits	.01CREDIT
Total Current Charges for BellSouth Companies	.01CREDIT
Total Current Charges	.01CREDIT
Total Amount Due	53.23CREDIT

Important Notice(s)

Please note: This is your revised final bill. See message following the BellSouth Current Charges.

Helpful Numbers

BellSouth Telecommunications, Inc. (BST)

NOTE: Numbers for other companies are listed on their bill pages.

Billing Questions or to Place an Order:

If calling from within the Florida BellSouth service area 1 800 858-9413

If calling from outside Florida or outside the Florida BellSouth service area 1 800 858-9413

Repair:

If calling from within the Florida BellSouth service area 780-2222

(continued on page 2) ▶

***** PLEASE FOLD, TEAR HERE AND RETURN THIS PORTION WITH YOUR PAYMENT. *****

Refund from BellSouth will follow within 20 days.

CURRENT CHARGES DUE BEFORE	PAST DUE AMOUNT	TOTAL AMOUNT DUE	AMOUNT PAID
	$53.22CR	$53.23CR	********

305 374-0838 559 0448
Jan 14, 1999
AV FXX B01 A001624

☐ Check here if correspondence included.

#001624 1 AV 0.24

P.O. BOX 70807
CHARLOTTE NC
28272-0807

ABA PROFSNL ASSOC
801 BRICKELL BAY DR
SUIT 662
MIA FL 33131-2937

30593740838559044999991201056120000000000000000000000000000

BELLSOUTH

ABA PROFSNL ASSOC
Account Number: 305 374-0838 559 0448
Bill Period Date: Jan 14, 1999

Detailed Statement of Charges

Other Charges and Credits		*Amount*
Work Completed On Jan 1, 1999		
1. Refund due to decrease in Telecommunications Access System Act Surcharge	**	.01CREDIT
Total Other Charges and Credits		.01CREDIT
Total BellSouth Current Charges		.01CREDIT

Messages

This revised final bill for telephone service includes charges not previously billed to your account. Since a credit balance is reflected on this account, you should receive a refund in the amount of $53.23. Calling cards for this account are now void and should be destroyed.

** Unregulated Charge

BELLSOUTH

A*B*A PROFESSIONAL
Account Number: 305 374-6404 618 0448
Date: Nov 18, 1998

THIS IS TO CALL YOUR ATTENTION TO THE UNPAID CHARGES OF $63.87 FOR THE FINAL BILL ON THE ABOVE ACCOUNT. IF PAYMENT IN FULL IS NOT RECEIVED BY NOVEMBER 25, 1998, ARRANGEMENTS WILL BE MADE TO BILL THE UNPAID CHARGES TO YOUR ACCOUNT, TN3053740838, WITHOUT FURTHER NOTICE.

IF YOU HAVE ANY QUESTIONS, PLEASE CALL 305 780-2187 FROM INSIDE THE LOCAL AREA OR, 1-800-828-4225 IF DIALING FROM OUTSIDE THE LOCAL AREA.

(PLEASE INCLUDE YOUR TELEPHONE NUMBER ON YOUR CHECK OR MONEY ORDER.)

***** PLEASE FOLD, TEAR HERE AND RETURN THIS PORTION WITH YOUR PAYMENT. *****

Please make check payable to BellSouth in U.S. funds.

TOTAL AMOUNT DUE	AMOUNT PAID
$63.87	

305 374-6404 618 0448
Nov 18, 1998
MP B01 E002676

☐ Check here if correspondence included.

P.O. BOX 33009
CHARLOTTE NC
28243-0001

#000172
A*B*A PROFESSIONAL
ASSOCIATION
801 BRICKELL BAY DR
SUITE 662
MIA FL 33131

30593746404618044999990201044030000000000000063870000006387

BELLSOUTH

ABA PROFSNL ASSOC
Account Number: 305 374-6404 777 0446
Date: Nov 3, 1998

****
* SEE IMPORTANT NOTICE ENCLOSED *
****

OK

***** PLEASE FOLD, TEAR HERE AND RETURN THIS PORTION WITH YOUR PAYMENT. *****

Please make check payable to BellSouth in U.S. funds.

TOTAL AMOUNT DUE	AMOUNT PAID
$35.09	

305 374-6404 777 0446
Nov 3, 1998
NT B01 E000402

☐ Check here if correspondence included.

#000402

P.O. BOX 33009
CHARLOTTE NC
28243-0001

ABA PROFSNL ASSOC
801 BRICKELL BAY DR
SUIT 662
MIA FL 33131-2937

3059374640477704499999020100603000000000000003509000000003509

BELLSOUTH

ABA PROFSNL ASSOC
Account Number: 305 374-6404 777 0446
Date: Nov 3, 1998

INQUIRIES CALL 305 780-2187

IMPORTANT NOTICE

Para Preguntas en Español: 780-2198

We recently sent you a final bill for your former telephone service. Our records indicate that $35.09 is past due and payment has not yet been received.

Please send us your payment today or call so that we can make arrangements for payment which are convenient for you.

If your payment is already on the way, please accept our thanks.

NT E000402

BELLSOUTH

A*B*A PROFESSIONAL ASSOCIATION
Account Number: 305 374-6404 618 0448
Bill Period Date: Jul 14, 1998

Thank you for choosing BellSouth. We sincerely appreciate your business.

Summary of Charges

	Amount
Previous Charges	
Amount of Last Bill	40.73
Less Payments	.00
Balance	40.73
Current Charges	
BellSouth	
Monthly Service Charges	12.00
Other Charges and Credits	.72
Taxes	2.69
Total Current Charges for BellSouth Companies	15.41
Total Current Charges Due Before Aug 5	15.41
Total Amount Due	56.14

Important Notice(s)

Late Charge Reminder: A 1.5% Late Payment Charge will apply to any unpaid balance as of Aug 17.

Nonpayment of Regulated Charges may result in discontinuance of service. Failure to pay unregulated and certain other charges, all of which are identified by ** on your bill, will not result in an interruption of local service. The amount of Regulated Charges may be obtained by calling 305 780-2800.

Helpful Numbers

BellSouth Telecommunications, Inc. (BST)

NOTE: Numbers for other companies are listed on their bill pages.

Billing Questions or to Place an Order:	
If calling from within the Florida BellSouth service area	305 780-2800
If calling from outside Florida or outside the Florida BellSouth service area	1-800-753-8172
Repair:	
If calling from within the Florida BellSouth service area	305 780-2222

(continued on page 2) ▶

***** PLEASE FOLD, TEAR HERE AND RETURN THIS PORTION WITH YOUR PAYMENT. *****

Please make check payable to BellSouth in U.S. funds.

CURRENT CHARGES DUE BEFORE	PAST DUE AMOUNT	TOTAL AMOUNT DUE	AMOUNT PAID
Aug 5	$40.73	$56.14	

305 374-6404 618 0448
Jul 14, 1998
AM 0908 B01 A005484

☐ Check here if correspondence included.

P.O. BOX 70807
CHARLOTTE NC
28272-0807

#005484 1 AB 0.26
A*B*A PROFESSIONAL
ASSOCIATION
1101 BRICKELL AV
BOX 310460
MIA FL 33231-0460

3059374640461804409088020104801000000000000040730000005614

BELLSOUTH

A*B*A PROFESSIONAL ASSOCIATION
Account Number: 305 374-6404 618 0448
Bill Period Date: Jul 14, 1998

Helpful Numbers (continued)

BellSouth Telecommunications, Inc. (BST)

NOTE: Numbers for other companies are listed on their bill pages.

Text Telephone (TTY) Users 7:00 AM - 7:00 PM (CST) Monday - Friday:

If calling from within the Florida BellSouth service area	305 780-2274
If calling from outside Florida or outside the Florida BellSouth service area	1 800 251-5325

Detailed Statement of Charges

Monthly Service Charges — *Amount*

Monthly Service - Jul 14 thru Aug 13

Basic Services	*Quantity*	*Unit Charge*	*Amount*
1. Remote Call Forwarding - Local	1 ...	12.00	12.00
Total Basic Services			12.00
Total Monthly Service Charges			12.00

Local Usage — *Amount*

Local Usage Summary

	-DAY-		-NIGHT/WKND-		
Band	Calls	Total Mins	Calls	Total Mins	Charges
1	1	1	4	4	.00
					.00

2. Local Usage Summary	.00
Total Local Usage	.00

Other Charges and Credits — *Amount*

3. Late Payment Charge (1.5% of Unpaid Regulated Balance)	.61
Work Completed On Jul 14, 1998	
4. Cost of Dade County manhole ordinance #83-3	.11
Total Other Charges and Credits	.72

Taxes — *Amount*

Taxes on Regulated Services

5. Federal Tax	.38
6. State/Local Tax	.95
7. Florida Gross Receipts Surcharge	.12
8. City Tax	.88
9. Franchise Charge	.36
Total Taxes on Regulated Services	2.69
Total Taxes	2.69

Total BellSouth Current Charges 15.41

Quantity and/or Unit Charge may not apply

BELLSOUTH

ABA PROFSNL ASSOC
Account Number: 305 374-6404 777 0446
Bill Period Date: Oct 14, 1998

Thank you for choosing BellSouth. We sincerely appreciate your business.

Summary of Charges

	Amount
Previous Charges	
Amount of Last Bill	.00
Less Payments	.00
Balance	.00
Current Charges	
Charges for BellSouth Companies	35.09
Charges for Other Companies	.00
Total Current Charges Due Before Nov 2	35.09
Total Amount Due	35.09

Important Notice(s)

Please note: This is your final bill. See message following the BellSouth Current Charges.

(continued on page 2) ▶

***** PLEASE FOLD, TEAR HERE AND RETURN THIS PORTION WITH YOUR PAYMENT. *****

Please make check payable to BellSouth in U.S. funds.

CURRENT CHARGES DUE BEFORE	PAST DUE AMOUNT	TOTAL AMOUNT DUE	AMOUNT PAID
Nov 2	$0.00	$35.09	

305 374-6404 777 0446
Oct 14, 1998
AV 1113 FXX B01 E010976

☐ Check here if correspondence included.

#010976

P.O. BOX 33009
CHARLOTTE NC
28243-0001

ABA PROFSNL ASSOC
801 BRICKELL BAY DR
SUIT 662
MIA FL 33131-2937

30593746404777044999981201007120000000000000000000000003509

BELLSOUTH

ABA PROFSNL ASSOC
Account Number: 305 374-6404 777 0446
Bill Period Date: Oct 14, 1998

Helpful Numbers

BellSouth Telecommunications, Inc. (BST)

NOTE: Numbers for other companies are listed on their bill pages.

Billing Questions or to Place an Order:	
If calling from within the Florida BellSouth service area	1 800 945-6500
If calling from outside Florida or outside the Florida BellSouth service area	1 800 753-7289
Repair:	
If calling from within the Florida BellSouth service area	1 800 247-2020
Text Telephone (TTY) Users 7:00 AM - 7:00 PM (CST) Monday - Friday:	
If calling from within the Florida BellSouth service area	305 780-2274
If calling from outside Florida or outside the Florida BellSouth service area	1 800 251-5325

Detailed Statement of Charges

Other Charges and Credits	*Amount*
Work Completed On Aug 29, 1998	
PON: DOLORES-NORTHN TEL SO: NQC9XCL6	
1. Charge for processing change in service	19.00
Charge for new service (08/30/98 - 10/13/98)	
2. Remote Call Forwarding - Local ($12.00/mo)	18.00
Work Completed On Sep 4, 1998	
3. Adjustment to cover minimum charge for local service (08/30/98 - 10/13/98) ($12.00/mo)	6.00CREDIT
Total Other Charges and Credits	31.00

Taxes	*Amount*
Taxes on Regulated Services	
4. Federal Tax	.37
5. State/Local Tax	2.37

AV E010976

(continued)▶

BELLSOUTH

A*B*A PROFESSIONAL ASSOCIATION
Account Number: 305 374-6404 618 0448
Bill Period Date: Sep 14, 1998

Thank you for choosing BellSouth. We sincerely appreciate your business.

Summary of Charges

	Amount
Previous Charges	
Amount of Last Bill	74.01
Less Payments	.00
Balance	74.01
Current Charges	
BellSouth	
Other Charges and Credits	8.09CREDIT
Taxes	2.05CREDIT
Total Current Charges for BellSouth Companies	10.14CREDIT
Total Current Charges Due Before Oct 2	10.14CREDIT
Total Amount Due	63.87

Important Notice(s)

Please note: This is your final bill. See message following the BellSouth Current Charges.

Helpful Numbers

BellSouth Telecommunications, Inc. (BST)

NOTE: Numbers for other companies are listed on their bill pages.

Billing Questions or to Place an Order:	
If calling from within the Florida BellSouth service area	305 780-2800
If calling from outside Florida or outside the Florida BellSouth service area	1-800-753-8172
Repair:	
If calling from within the Florida BellSouth service area	305 780-2222

(continued on page 2) ▶

***** PLEASE FOLD, TEAR HERE AND RETURN THIS PORTION WITH YOUR PAYMENT. *****

Please make check payable to BellSouth in U.S. funds.

CURRENT CHARGES DUE BEFORE	PAST DUE AMOUNT	TOTAL AMOUNT DUE	AMOUNT PAID
Oct 2	$74.01	$63.87	

305 374-6404 618 0448
Sep 14, 1998
BP 1014 FXX B01 A000131

- Make sure that we do not loose this in the shuffle

☐ Check here if correspondence included.

P.O. BOX 70807
CHARLOTTE NC
28272-0807

A*B*A PROFESSIONAL
ASSOCIATION
801 BRICKELL BAY DR
SUITE 662
MIA FL 33131

got credit since the system never work.

30593746404618044999981201045020000000000000074010000006387

BELLSOUTH

A*B*A PROFESSIONAL ASSOCIATION
Account Number: 305 374-6404 618 0448
Bill Period Date: Sep 14, 1998

Helpful Numbers (continued)

BellSouth Telecommunications, Inc. (BST)

NOTE: Numbers for other companies are listed on their bill pages.

Text Telephone (TTY) Users 7:00 AM - 7:00 PM (CST) Monday - Friday:
If calling from within the Florida BellSouth service area 305 780-2274
If calling from outside Florida or outside the Florida BellSouth service area 1 800 251-5325

Detailed Statement of Charges

Local Usage — Amount

Local Usage Summary

Band	-DAY- Calls	-DAY- Total Mins	-NIGHT/WKND- Calls	-NIGHT/WKND- Total Mins	Charges
1	13	76	5	38	.00
					.00

1. Local Usage Summary	.00
Total Local Usage	.00

Other Charges and Credits — Amount

2. Late Payment Charge (1.5% of Unpaid Regulated Balance)	1.11
Work Completed On Aug 21, 1998	
3. Credit for service disconnected (08/22/98 - 09/13/98) ($12.00/mo)	9.20CREDIT
Total Other Charges and Credits	8.09CREDIT

Taxes — Amount

Taxes on Regulated Services

4. Federal Tax	.29CREDIT
5. State/Local Tax	.72CREDIT
6. Florida Gross Receipts Surcharge	.09CREDIT
7. City Tax	.67CREDIT
8. Franchise Charge	.28CREDIT
Total Taxes on Regulated Services	2.05CREDIT
Total Taxes	2.05CREDIT

Total BellSouth Current Charges 10.14CREDIT

Messages

This bill represents charges for your former telephone service. If you cannot make payment in full, please call 305 780-2800 before Oct 2 and we will try to establish a payment arrangement which meets your individual needs. Calling cards for this account are now void and should be destroyed.

BELLSOUTH

A*B*A PROFESSIONAL
Account Number: 305 374-6404 618 0448
Date: Oct 6, 1998

****
* SEE IMPORTANT NOTICE ENCLOSED *
****

***** PLEASE FOLD, TEAR HERE AND RETURN THIS PORTION WITH YOUR PAYMENT. *****

Please make check payable to BellSouth in U.S. funds.

TOTAL AMOUNT DUE	AMOUNT PAID
$63.87	

305 374-6404 618 0448
Oct 6, 1998
NM B01 E013592

☐ Check here if correspondence included.

P.O. BOX 33009
CHARLOTTE NC
28243-0001

#013592
A*B*A PROFESSIONAL
ASSOCIATION
1101 BRICKELL AV
BOX 310460
MIA FL 33231-0460

30593746404618044999990201044030000000000000638700000006387

BELLSOUTH

A*B*A PROFESSIONAL
Account Number: 305 374-6404 618 0448
Date: Oct 6, 1998

INQUIRIES CALL 305 780-2187

IMPORTANT NOTICE

Para Preguntas en Español: 780-2198

We recently sent you a final bill for your former telephone service. Our records indicate that $63.87 is past due and payment has not yet been received.

Please send us your payment today or call so that we can make arrangements for payment which are convenient for you.

If your payment is already on the way, please accept our thanks.

NM E013592

BELLSOUTH

No Document Payment Receipt

Area Code	Telephone Number	Customer Code	Check Digit
305	374-6404	618	

Billing Name: AGA PROFESSIONAL

Street Address: 1101 BRICKELL AVE

City: MIAMI State: FL. Zip Code: 33231

Please Check One

- [✓] Payment $ 63 87
- [ ] Deposit $
  - ID Type & Number
- [ ] Advance Payment $

Thank You ...

We Appreciate Your Business!

Your payment will be posted to your BellSouth account within seconds.

*In order to save time in the future, please bring your telephone bill.... or you may **Mail Your Payment.***

Ply 1 - Customer's Copy

Ply 2 - Agency's Copy

BELLSOUTH

ABA PROFSNL ASSOC
Account Number: 305 374-6404 044 0445
Bill Period Date: Jan 14, 1999

Thank you for choosing BellSouth. We sincerely appreciate your business.

Summary of Charges

	Amount
Previous Charges	
Amount of Last Bill	.00
Less Payments	.00
Balance	.00
Current Charges	
BellSouth	
Other Charges and Credits	12.00
Taxes	2.66
Total Current Charges for BellSouth Companies	14.66
Total Current Charges Due Before Feb 1	14.66
Total Amount Due	14.66

Important Notice(s)

Please note: This is your final bill. See message following the BellSouth Current Charges.

Helpful Numbers

BellSouth Telecommunications, Inc. (BST)

NOTE: Numbers for other companies are listed on their bill pages.

Billing Questions or to Place an Order:	
If calling from within the Florida BellSouth service area	305 780-2800
If calling from outside Florida or outside the Florida BellSouth service area	1-800-753-8172
Repair:	
If calling from within the Florida BellSouth service area	305 780-2222

(continued on page 2) ▶

BELLSOUTH

ABA PROFSNL ASSOC
Account Number: 305 374-6404 044 0445
Bill Period Date: Jan 14, 1999

Detailed Statement of Charges

Local Usage

Local Usage Summary

Band	-DAY- Calls	-DAY- Total Mins	-NIGHT/WKND- Calls	-NIGHT/WKND- Total Mins	Charges
1	1	1	0	0	.00
					.00

	Amount
1. Local Usage Summary	.00
Total Local Usage	.00

Other Charges and Credits

	Amount
Work Completed On Dec 18, 1998	
PON: MANNY SO: NQFRHNY7	
Charge for new service (12/19/98 - 01/13/99)	
2. Remote Call Forwarding - Local ($12.00/mo)	10.40
Work Completed On Dec 31, 1998	
PON: CONNIE-SD SO: DQ1V2BTO	
3. Adjustment to cover minimum charge for local service (12/19/98 - 01/13/99) ($12.00/mo)	1.60
Total Other Charges and Credits	12.00

Taxes

Taxes on Regulated Services

	Amount
4. Federal Tax	.37
5. State/Local Tax	.94
6. Florida Gross Receipts Surcharge	.12
7. City Tax	.87
8. Franchise Charge	.36
Total Taxes on Regulated Services	2.66
Total Taxes	2.66

Total BellSouth Current Charges 14.66

Messages

This bill represents charges for your former telephone service. If you cannot make payment in full, please call 305 780-2800 before Feb 1 and we will try to establish a payment arrangement which meets your individual needs. Calling cards for this account are now void and should be destroyed.

We appreciate the excellent manner in which you have paid your account. We hope to have the opportunity to serve you again in the future.

Shirley Stokes

From: Shirley Stokes
Sent: Thursday, January 27, 2000 8:01 AM
To: Anne Marsh
Cc: Shirley Stokes; Carmen Pena; Leroy Rasberry
Subject: RE: complaint of manuel lora (237627R)

Since you are familiar with this one, you can decide on the title. Yes, I would like to have a copy of the rec. Thanks.

-----Original Message-----
From: Anne Marsh
Sent: Thursday, January 27, 2000 7:50 AM
To: Shirley Stokes
Cc: Leroy Rasberry
Subject: RE: complaint of manuel lora (237627R)

I do not know if you have any familiarity with this case at all. It is pretty involved. I have discussed before with Leroy and Carmen. The customer is not paying his bills, he keeps protesting that he shouldn't have to pay for ISDN. Unfortunately, he hasn't paid for anything else either.
BellSouth has provided about $10,000 in credits for the ISDN. I have done an extensive analysis on the bills and have determined that the customer is not owed anything further. I have written a recommendation to deny his request for informal conference.

Is there any specific language that should be used for the docket title? I would like to get a docket opened today. I can provide a copy of the rec to you this morning.

-----Original Message-----
From: Leroy Rasberry
Sent: Wednesday, January 26, 2000 5:44 PM
To: Anne Marsh
Cc: Carmen Pena; Leroy Rasberry
Subject: RE: complaint of manuel lora (237627R)

Hi Anne,

Sorry about the delayed response.

Please assign Shirley Stokes as the CAF representative on the case.

Thanks

-----Original Message-----
From: Anne Marsh
Sent: Monday, January 24, 2000 4:26 PM
To: Leroy Rasberry

Subject: complaint of manuel lora (237627R)

I have written a recommendation to deny Mr. Lora's request for informal conference, to be taken up on the 2/15/00 agenda. There is no docket opened at this time. What role will you be playing in the recommendation?

STATE OF FLORIDA

Commissioners:
JOE GARCIA, CHAIRMAN
J. TERRY DEASON
SUSAN F. CLARK
JULIA L. JOHNSON
E. LEON JACOBS, JR.

DIVISION OF CONSUMER AFFAIRS
BEVERLEE DEMELLO
DIRECTOR
(850) 413-6100
TOLL FREE 1-800-342-3552

Public Service Commission

August 3, 1999

Mr. Manuel Lora
ABA Professional Association, Inc.
Tower #4 - Suite #662
801 Brickell Bay Drive
Miami, FL 33131

Dear Mr. Lora:

This is to inform you that the Florida Public Service Commission (PSC) received your request for an informal conference against BellSouth Telecommunications, Inc. (BellSouth). Your request is being processed, and Ms. Anne Marsh, who is a staff member of our Division of Communications, will be contacting you in the near future to discuss your concerns.

If you have any questions, please contact her at 1-850-413-6554 or by e-mail at amarsh@psc.state.fl.us.

Sincerely,

Leroy A. Rasberry, Chief
Bureau of Complaint Resolution
Division of Consumer Affairs

LAR:ewe

cc: BellSouth Telecommunications, Inc.

Public Service Commission

State of Florida

-M-E-M-O-R-A-N-D-U-M-

DATE: August 3, 1999

TO: Anne Marsh - Division of Communications

FROM: Leroy A. Rasberry - Bureau Chief of Complaint Resolutions - Division of Consumer Affairs

RE: Informal Conference Request

Please do a preliminary review of the informal conference request concerning ABA Professional Association, Inc., against BellSouth Telecommunications, Inc.

237627R - ABA Professional Association, Inc.

STATE OF FLORIDA

DIVISION OF CONSUMER AFFAIRS
BEVERLEE DEMELLO
DIRECTOR
(850) 413-6100
TOLL FREE 1-800-342-3552

Public Service Commission

FACSIMILE TRANSMITTAL COVER SHEET

DATE: August 3, 1999

TO: Sherry Coxe

OFFICE/BUSINESS: BellSouth Telecommunications, Inc.

FAX NUMBER: (305) 350-9091

FROM: DIVISION OF CONSUMER AFFAIRS

FAX NUMBER: (850) 413-6362

TELEPHONE NUMBER: (850) 413-6100 OR 1-800-342-3552

COMMENTS:

NUMBER OF PAGES, INCLUDING THIS COVER SHEET: 3

HP OfficeJet
Personal Printer/Fax/Copier

Fax Log Report

Aug-03-99 04:42 PM

Identification	Result	Pages	Type	Date	Time	Duration	Diagnostic
613053509091	OK	03	Sent	Aug-03	04:41P	00:00:54	002482030022

1.3.0 2.8

ABA PROFESSIONAL ASSOCIATION INC.

801 BRICKELL BAY DRIVE
TOWER #4 SUITE #662 MIAMI FL, 33131

Phone 1-800-222-4373 USA & Canada
1-800-344-8211 From The Caribbean
800-122-06 From Venezuela
0130-814747 From Germany
046-059416 From Switzerland

FAX 1-800-442-0497 From USA, Canada, & Caribbean ELSEWHERE 305-374-0497
LOCAL NUMBERS 305- 374-3131, 374-3162, 374-6404 374-0838,

E-MAIL ABAHERE@WORLDNET.ATT.NET

JULY 30, 1999

PUBLIC SERVICE COMMISSION
C/O LEROY A RASBERY
VOICE 1-800-342-3552.
FAX 800-511-0809. 1-850-413-6120

CAPITAL CIRCLE OFFICE CENTER
2540 SHUMARUD OAK BOULEVARD
TALLAHASSEE FL 32399-0850

COMPLAINT # 237627R

DEAR SIR PURSUANT OUR CONVERSATION WE RESPECTFULLY REQUEST AN INFORMAL CONFERENCE AS SOON AS POSSIBLE. AS YOU HAD STATED SOMEONE WITHIN YOUR DIVISION WOULD HOST THIS CONFERENCE.

THANK YOU IN ADVANCE FOR YOUR PROMPT ATTENTION.

SINCERELY,

MANUEL LORA

TO: Valued CSR / ABA Prof Asso
FAX #: 3053740497
Fax Overflow #: 3056313979

You should receive 9 pages including this cover sheet.

This fax cover sheet is provided to subscribers of BellSouth Business Fax Services Fax Overflow service. It acknowledges that the following pages were delayed in transmission to you because your fax machine was busy, out-of-paper, temporarily out-of-order, or shut off.

Thank you for using BellSouth Business Fax Services Fax Overflow service. If you have questions or need assistance, please call our Customer Service department at 1-800-986-9488.

FAX ID: 41j65721
Received: 7/22/98 02:35 PM
Printed: 7/22/98 08:45 PM

BELLSOUTH

BellSouth
Communication Systems
5555 Windward Parkway, Suite B
Alpharetta, Georgia 30201-3695

Manuel Lora
ABA Professional Association Inc.
1101 Brickell Ave.
Miami, FL 33131

Dear Mr. Lora:

We at BellSouth Communications Systems apologize for all the inconvenience caused during the process of replacing your analog lines to digital and the installation of the Norstar System. We know what it means to an organization like yours to be two days without communications. We have done everything in our power to solve the problem and have you up and running. Again we apologize for the inconvenience to you and your customers.

Sincerely,

Sara Ruiz
Account Executive

BELLSOUTH

BellSouth
Communication Systems
5555 Windward Parkway, Suite B
Alpharetta, Georgia 30201-3896

December 2, 1998

Mr. Manuel Lora
ABA Professional Association, Inc.
801 Brickell Bay Drive
Miami, FL 33131

Dear Mr. Lora:

After speaking to Larry Antonucci, he confirmed that there would not be any charges made to your company for installation or de-installation of the equipment. We will adjust the equipment bill to a zero balance. We will give you until the 23rd of December to have another vendor install equipment for you. Once you have a date that your new equipment will be installed, please contact Larry Antonucci to set up a time for him to come pick up our equipment. His number is (305) 597-5765.

In regards to your ISDN lines, vendor services has agreed to change your lines back to analog with no charge for the change. You are still required to pay your monthly service bills. With analog lines, you can have your old features, such as call waiting and remote call forwarding. We would need to know what date you would want your lines changed back as soon as possible so we do not miss your timeframe.

Please send me your response as soon as you get a chance.

Sincerely,

Connie Page

Connie Page
Sales Manager
BellSouth Sales Center

374-3131

Memorandum

To: Mr. Manwell Lora

From: Doris W. Freeman

Date: 11/03/98

Re: Repair Service Representative

Mr. Lora,

This Memorandum acknowledges that we discussed problems that you encountered with Angela Barnes checking on trouble ticket 468610. Angela was informally counseled at that time.

BellSouth Business appreciates your business. It is our goal to provide Excellent Customer Service. To obtain this goal we know it requires the Best employees servicing our customers.

Bell South

Dear Ann: My wife and I recently visited her 86-year-old mother in Oklahoma. While we were there, she asked us to look at her telephone bill, which showed lease charges for four phones at $4.45 each. She had been paying these lease charges for over 23 years. We discovered that one of the phones had been taken out of her house 20 years before, and two phones had not been used for over 15 years.

I wonder how many senior citizens are unknowingly paying lease charges for old phones that are no longer in use.

Bob in Grand Prairie, Texas

Most people today buy their phones. However, it wouldn't hurt for my readers to take a good, hard look at their next phone bill and see if there are any incorrect leasing charges.

ABA PROFESSIONAL ASSOCIATION INC.

801 BRICKELL BAY DRIVE
TOWER-4 SUITE #662 MIAMI FL, 33131

1) IN ANTICIPATION OF THESE UPCOMING CHANGES TO A NEW STATE OF THE ART PHONE EQUIPMENT AND SYSTEM. ABA PURCHASED ISDN (DIGITAL) COMPUTERIZED EQUIPMENT, FROM OTHER VENDORS INCLUDING MODEMS TO FUNCTION ACCORDINGLY WITH THE NEWLY PURCHASED/LEASED PHONE EQUIPMENT & LINES FROM BELL SOUTH.

2) THE DATES OF EQUIPMENT INSTALLATION (COMMITMENT DATES) WERE NEVER MET. BELL SOUTH STAFF. DATES OF COMMITMENT WERE CHANGED ON DIFFERENT OCCASIONS. THE INITIAL DATE WAS FOR SOMETIME IN AUGUST.

3) ABA PRINCIPALS (M. LORA) NOTICING BELL SOUTH CONTINUOS INABILITY TO COMPLY WITH INITIAL PROMISES HAD CONCERN AND REQUESTED THAT THE INSTALLATION BE DONE IN A SEQUENTIAL ORDER, WHEREAS THE LINES BE CONVERTED FROM ANALOG TO ISDN ONE AT A TIME. TILL THEY WERE ALL SUCCESSFULLY COMPLETED. IF THE INITIAL ATTEMPT FAILED ONLY ONE OR TWO LINES WOULD BE OUT OF SERVICE FOR A LIMITED LENGTH OF TIME.

4) BELL SOUTH UNDERSTANDING THEIR MISTAKES, BLUNDERS, UNDERSTOOD AND AGREED ORALLY TO ABA REQUEST CONVERTING ONE LINE AT A TIME.

THE LETTER OF APOLOGY ALONG WITH THE FACTUAL RECORDS UNEQUIVOCALLY DEMONSTRATE THAT THE BELL SOUTH FAILED TO COMPLY WITH ALL OF THEIR PROMISES AND COMMITMENTS AS WELL AS HIDING SIGNIFICANT INFORMATION THAT CAUSED SERIOUS FINANCIAL LOSSES TO ABA.

INSTALLATION DATES NOR THE SPECIFIC INSTRUCTIONS WERE MET, THE EQUIPMENT FAILED TO PROVIDE THE SERVICE WHICH WAS TO BE EQUAL OR BETTER. YET ABA WAS COOPERATIVE AT ALL TIMES GRANTING BELL SOUTH REPRESENTATIVES AMPLE TIME TO RESOLVE THE MANY CONFLICTING PROBLEMS WITH THE NEW EQUIPMENT.

DURING THIS TIME ABA ENCOUNTER SERIOUS CONFLICTS WITHIN THEIR MODERNIZED COMPUTERIZED FAX SOFTWARE WITH THE NEWLY PURCHASED DIGITAL (ISDN) MODEMS AND ISDN LINES. WHILE CONSULTING AND TROUBLE SHOOTING, TECHNICIANS TESTING THE DIGITAL MODEMS DISCOVER THE PHONES LINES WERE NOT RESPONDING (SPEED) AS NORMAL ISDN LINES. THEY DIRECTED ABA PRINCIPALS TO INQUIRE WITH THE ISDN PROVIDER (BELL SOUTH) AS TO THESE CONFLICTS. THEY FELT THE LINES WERE NO ISDN.

BELL SOUTH DISPATCHED A TECHNICIAN IGNACIO RAMIREZ WHOM WAS THEIR KEY PERSON IN THE MANY PHASES OF THE INSTALLATION AND CONVERSION MR. RAMIREZ EXPLAINED TO ABA PRINCIPALS THE FOLLOWING.

BELLSOUTH

RF-9041
(10-95)

Payment Receipt

Thank You...

We Appreciate Your Business!

Your payment will post to your BellSouth account within seconds.

SEARS ADVENTR 2
36F PA P 0047 12/03/98 $144.76 CK
PAYM 305-374-0838 359-0440-001

BELLSOUTH

No Document Payment Receipt

RF-9343 (11-96)

Area Code	Telephone Number	Customer Code	Check Digit
305	374 · 3131	555	

Billing Name: ABA PROFESSIONAL

Street Address: 1101 BRICKELL AVE

City: MIAMI State: FL. Zip Code: 33231

Please Check One

- [x] Payment $ 343.46
- [ ] Deposit $
  ID Type & Number
- [ ] Advance Payment $

Thank You ...

We Appreciate Your Business!

Your payment will be posted to your BellSouth account within seconds.

In order to save time in the future, please bring your telephone bill.... or you may Mail Your Payment.

SEARS CRL 58 3
16F PA P 0103 12/08/[illegible] $343.46 CKN
PAYM 305-374-3131[illegible]0443

Ply 1 - Customer's Copy Ply 2 - Agency's Copy

BELLSOUTH

No Document Payment Receipt

RF-9343 (11-96)

Area Code	Telephone Number	Customer Code	Check Digit
305	374 · 6404	618	

Billing Name: ABA PROFESSIONAL

Street Address: 1101 BRICKELL AVE

City: MIAMI State: FL. Zip Code: 33231

Please Check One

- [x] Payment $ 63.87
- [ ] Deposit $
  ID Type & Number
- [ ] Advance Payment $

Thank You ...

We Appreciate Your Business!

Your payment will be posted to your BellSouth account within seconds.

In order to save time in the future, please bring your telephone bill.... or you may Mail Your Payment.

SEARS CRL 58 [illegible]
16F PA P 0103 12/08/[illegible] $63.87 CKN
PAYM 305-374-6404-[illegible]

Ply 1 - Customer's Copy Ply 2 - Agency's Copy

BELLSOUTH

No Document Payment Receipt

RF-9343 (11-96)

Area Code	Telephone Number	Customer Code	Check Digit

Billing Name

Street Address

City State Zip Code

Please Check One

☐ Payment $

☐ Deposit $

ID Type & Number

☐ Advance Payment $

Thank You ...

We Appreciate Your Business!

Your payment will be posted to your BellSouth account within seconds.

In order to save time in the future, please bring your telephone bill.... or you may Mail Your Payment.

Ply 1 - Customer's Copy Ply 2 - Agency's Copy

BELLSOUTH

No Document Payment Receipt

RF-9343 (11-96)

Area Code	Telephone Number	Customer Code	Check Digit
305	374 0838	360	

Billing Name
ABA PROFESSIONAL

Street Address
1101 BRICKELL AVE

City State Zip Code
MIAMI FL 33131

Please Check One

☑ Payment $ 1283.87

☐ Deposit $

ID Type & Number

[ ] Advance Payment $

Thank You ...

We Appreciate Your Business!

Your payment will be posted to your BellSouth account within seconds.

In order to save time in the future, please bring your telephone bill.... or you may Mail Your Payment.

Ply 1 - Customer's Copy Ply 2 - Agency's Copy

BELLSOUTH

BellSouth Communication Systems
5555 Windward Parkway, Suite B
Alpharetta, GA 30201-3895

June 10, 1998
Manuel Lara.
ABA
905 S. Bayshore Drive
S1625, 1626
Miami, FL 33131

Dear Mr. Lara:

Thank you for your interest in the Norstar telephone system from BellSouth Communication Systems. BellSouth has the resources necessary to provide you with the best equipment and service available; just ask one of our 10,000 BellSouth Norstar customers.

The BellSouth Norstar system is fully digital, cost efficient, and its ease of use, feature rich sets and reliability are unsurpassed. With nearly 6 million telephone sets in over 70 countries, ***Norstar is the #1 telephone system in the world.*** And that's because Norstar not only meets the needs of business; it anticipates them.

Enclosed is a proposal for a new BellSouth Norstar telephone system. The proposal outlines the equipment summary, which includes a one year warranty, and installation details. Should you have any questions about the enclosed material, please feel free to contact me at 800-782-7258.

Sincerely,

Sara Ruiz

Sara Ruiz
Account Executive

BELLSOUTH

ABA PROFSNL ASSOC
Account Number: 305 374-0838 559 0448
Date: Dec 24, 1998

****
* SEE IMPORTANT NOTICE ENCLOSED *
****

***** PLEASE FOLD, TEAR HERE AND RETURN THIS PORTION WITH YOUR PAYMENT. *****

Please make check payable to BellSouth in U.S. funds.

305 374-0838 559 0448
Dec 24, 1998
MT 801 E000808

TOTAL AMOUNT DUE	AMOUNT PAID
$196.59	

☐ Check here if correspondence included.

#000808

ABA PROFSNL ASSOC
801 BRICKELL BAY DR
SUIT 662
MIA FL 33131-2937

P.O. BOX 33009
CHARLOTTE NC
28243-0001

30593740838559044999990201051030000000000001965900000019659

BELLSOUTH

A*B*A PROFESSIONAL ASSOCIATION
Account Number: 305 374-6404 618 0448
Bill Period Date: Sep 14, 1998

Thank you for choosing BellSouth. We sincerely appreciate your business.

Summary of Charges

	Amount
Previous Charges	
Amount of Last Bill	74.01
Less Payments	.00
Balance	74.01
Current Charges	
BellSouth	
Other Charges and Credits	8.09CREDIT
Taxes	2.05CREDIT
Total Current Charges for BellSouth Companies	10.14CREDIT
Total Current Charges Due Before Oct 2	10.14CREDIT
Total Amount Due	63.87

Important Notice(s)

Please note: This is your final bill. See message following the BellSouth Current Charges.

Helpful Numbers

BellSouth Telecommunications, Inc. (BST)

NOTE: Numbers for other companies are listed on their bill pages.

Billing Questions or to Place an Order:	
If calling from within the Florida BellSouth service area	305 780-2800
If calling from outside Florida or outside the Florida BellSouth service area	1-800-753-8172
Repair:	
If calling from within the Florida BellSouth service area	305 780-2222

(continued on page 2) ▶

***** PLEASE FOLD, TEAR HERE AND RETURN THIS PORTION WITH YOUR PAYMENT. *****

Please make check payable to BellSouth in U.S. funds.

CURRENT CHARGES DUE BEFORE	PAST DUE AMOUNT	TOTAL AMOUNT DUE	AMOUNT PAID
Oct 2	$74.01	$63.87	

305 374-6404 618 0448
Sep 14, 1998
AM 1014 FXX B01 A005482

☐ Check here if correspondence included.

P.O. BOX 70807
CHARLOTTE NC
28272-0807

#005482 1 AB 0.26
A*B*A PROFESSIONAL
ASSOCIATION
1101 BRICKELL AV
BOX 310460
MIA FL 33231-0460

30593746404618044999981201045020000000000000074010000006387

BELLSOUTH

ABA PROFSNL ASSOC
Account Number: 305 374-0838 360 0441
Bill Period Date: Dec 14, 1998
CKT: 70.IBSD.512986..SB

Thank you for choosing BellSouth. We sincerely appreciate your business.

Summary of Charges

	Amount
Previous Charges	
Amount of Last Bill	4,499.85
Less Payments	1,783.89CREDIT
Balance - Thank You for Your Payment	2,715.96
Current Charges	
BellSouth	
Monthly Service Charges	300.35
Local Usage	36.16
Other Charges and Credits	226.83
Itemized Calls	1.20
Taxes	86.12
Total Current Charges for BellSouth Companies	650.66
Charges for Other Companies	838.00
Total Current Charges Due Before Jan 5	1,488.66
Total Amount Due (See Messages for Charges Under Investigation)	4,204.62

Important Notice(s)

Late Charge Reminder: A 1.5% Late Payment Charge will apply to any unpaid balance as of Jan 15.

Nonpayment of Regulated Charges may result in discontinuance of service. Failure to pay unregulated and certain other charges, all of which are identified by ** on your bill, will not result in an interruption of local service. The amount of Regulated Charges may be obtained by calling 1 800 858-9413.

(continued on page 2) ▶

***** PLEASE FOLD, TEAR HERE AND RETURN THIS PORTION WITH YOUR PAYMENT. *****

Please make check payable to BellSouth in U.S. funds.

CURRENT CHARGES DUE BEFORE	PAST DUE AMOUNT	TOTAL AMOUNT DUE	AMOUNT PAID
Jan 5	$2,715.96	$4,204.62	

305 374-0838 360 0441
Dec 14, 1998
AV 0112 801 A001493

☐ Check here if correspondence included.

#001493 2 AV 0.46

P.O. BOX 70807
CHARLOTTE NC
28272-0807

ABA PROFSNL ASSOC
801 BRICKELL BAY DR
SUIT 662
MIA FL 33131-2937

305937408383600440112802010841100000000000271596000420462

6K0S

S A L E S / S E R V I C E O R D E R 3 Z 3 0 0 1 2 4 5 4

11-NOV-1998 10:47:39 AM
REQUESTOR BYGPPST
PRINT DISTRIBUTION:
SPOOLER

****
* CUSTOMER *
* NUMBER *
* 112615 *
****

CLOSED CLOSED CLOSED CLOSED CLOSED CLOSED CLOSED CLOSED CLOSED CLOSED CLOSED
COMPLETED 09/14/98 COMPLETION ENTERED 09/16/98
****

ORDER TYPE N - NEW SYSTEM

ORDER NUMBER 3Z30012454 ORDER STATUS CP MA CODE CE STATUS DATE 08/28/98
CUSTOMER....: NUMBER 112615 FREEZE DATE 08/04/98
NAME ABA PROFESSIONAL ASSOC
ADDRESS 1101 BRICKELL ROAD #3104
CITY MIAMI STATE FL ZIP 33131-
CONTACT MANUEL LORA/CEO PHONE (305)374-3131
INSTALLATION: NUMBER 112615001
NAME ABA PROFESSIONAL ASSOC
ADDRESS 801 BRICKELL BAY DR., STE 662
CITY MIAMI STATE FL ZIP 33131-
CONTACT MANUEL LORA/CEO PHONE (305)374-3131
SHIPPING....: NAME ABA PROFESSIONAL ASSOC
ADDRESS1 801 BRICKELL BAY DR., STE
ADDRESS2 SUITE 662
CITY MIAMI STATE FL ZIP 33131-
CONTACT MANUEL LORA/CEO PHONE (305)374-3131

AE CODE 3Z300TJ NAM CODE HOLD FLAG N PAYMENT OPTION 018
AGREEMENT NUMBER 97A000264 MOJ DATE..... 08/07/98
BASIC SYSTEM CODE 385 PCI CODE ORIGINAL DUE DATE..... 08/11/98
SALE DATE..... 07/31/98 SUBSEQUENT DUE DATE..... 09/14/98
FACILITIES DATE. 07/31/98 AUTHORITY..... BR2P110
RA NUMBER JOB NUMBER CUSTOMER P.O. CONTRACT
GEO CODE 100250920 REVENUE CODE 2P11 LEASE NUMBER 00000-0067628-22001

SUB-TOTAL.....	$	7,213.68
LESS DISCOUNT.....	$	1,792.57
TOTAL PRODUCTS.....	$	5,421.11
PLUS TAX.....	$	0.00
PLUS SHIPPING.....	$	68.00
PLUS EXPEDITE CHGS..	$	0.00
ORDER TOTAL.....	$	5,489.11
LESS ADJUSTMENTS....	$	0.00
LESS PREPAYMENTS....	$	0.00
TOTAL DUE.....	$	5,489.11

IMPLEMENTOR NAME SARA RUIZ/JOINER PHONE (800)925-0010
TECHNICIAN ID ZSS011011373 NAME RAMIREZ IGNACIO (S.T.)

ABA PROFESSIONAL ASSOCIATION INC.

(13)

801 BRICKELL BAY DRIVE
TOWER-4 SUITE #662 MIAMI FL, 33131

Phone 1-800-222-4373 USA & Canada
1-800-344-8211 From The Caribbean
800-122-06 From Venezuela
0130-814747 From Germany
046-059416 From Switzerland

GARY
305 3740838
x26

FAX 1-800-442-0497 From USA, Canada, & Caribbean ELSEWHERE 305-374-0497
LOCAL NUMBERS 305- 374-3131, 374-3162, 374-6404 374-0838,

E-MAIL ABAHERE@WORLDNET.ATT.NET

APRIL 14, 1999

PUBLIC SERVICE COMMISSION
COMMUNICATIONS DIVISION
C/O SUE OLLELA

VOICE 1-850-413-6540
FAX 1-800-511-0809
CONFIRM
COMPLAINT #237627R CONTINUATION.

REPORT # 37

SUBJECT : ATTACHED DOCUMENTS,

IN THE MONTHS OF JUNE AND JULY ABA ENTERTAIN SEVERAL PROPOSALS MADE BY BELL SOUTH REPRESENTATIVE, SARAH RUIZ FROM THEIR HOME OFFICE IN ATLANTA. THE DOCUMENTED AND FACTUAL EVIDENCE IS CONCLUSIVE. BELL SOUTH IN THE MONTH OF JULY CONVINCED AND SOLD ABA ISDN EQUIPMENT AND SERVICE WITH THE FOLLOWING UNDERSTANDING.

A) THE EQUIPMENT AND SERVICE WOULD IMPROVE SIGNIFICANTLY AND BETTER, IMPROVE ABA PRESENT EQUIPMENT AND SERVICE TO THAT OF STATE OF THE ART..

B) INSTALLATION AGREEMENT BETWEEN ABA AND BELL SOUTH CALLED TO BE FREE (NO CHARGE) TO BE INITIATED AND COMPLETED BY SPECIFIC DATES. THE ULTIMATE RESULTS WERE AS FOLLOW :

ABA PROFESSIONAL ASSOCIATION INC.

801 BRICKELL BAY DRIVE
TOWER-4 SUITE #662 MIAMI FL, 33131

Phone 1-800-222-4373 USA & Canada
1-800-344-8211 From The Caribbean
800-122-06 From Venezuela
0130-814747 From Germany
046-059416 From Switzerland

FAX 1-800-442-0497 From USA, Canada, & Caribbean ELSEWHERE 305-374-0497
LOCAL NUMBERS 305- 374-3131, 374-3162, 374-6404 374-0838,

E-MAIL ABAHERE@WORLDNET.ATT.NET

PUBLIC SERVICE COMMISSION
COMMUNICATIONS DIVISION
C/O SUE OLLELA

VOICE 1-850-413-6540
FAX 1-850-413-6541
FAX 1-800-511-0809
CONFIRM
COMPLAINT # 237627R CONTINUATION.

APRIL 26, 1999

BRIEF FOR MS OLLELA , I SINCERELY HOPE THAT THE INFORMATION PROVIDED TO YOU WAS SUFFICIENT TO ASSIST IN DETERMINING THAT THE PAYMENTS AS DEPICTED IN PRIOR REPORTS WERE NOT PROPERLY CREDITED.

I UNDERSTAND HOW THE PRESENTATION MADE BY BELL SOUTH REPRESENTATIVES MAKE THEM LOOK AS THEY HAVE GIVEN OR ADJUSTED THE ACCOUNT FOR THOUSANDS OF DOLLARS. THE REALITY IS FAR FROM THE PICTURE THEY PROVIDE PRESENTING THEMSELVES AS NICE KIND PERSONS.

IT IS UNEQUIVOCALLY FROM THE CONTRACT FOR INSTALLATION WE FAX TO YOU THAT THE STIPULATION WITHIN SAID AGREEMENT WAS FOR NO INSTALLATION FEES.

ADDITIONALLY WE HAD PAID FOR PRIVATE INDIVIDUALS (EX BELL SOUTH)TECHNICIANS TO DO THE WIRING AT A MUCH LOWER COST THAN BELL SOUTH CHARGES. THEY (BELL SOUTH) REPRESENTATIVES INSPECTED THIS LOCATION

ABA PROFESSIONAL ASSOCIATION INC.

801 BRICKELL BAY DRIVE
TOWER-4 SUITE #662 MIAMI FL, 33131

AND FOUND THE WIRING WAS IN COMPLIANCE AND EQUIVALENT TO THEIR SPECIFICATIONS.

AS TO THE EQUIPMENT REFUND THEY HAD NO CHOICE. WHEN THIS FIRM MADE THE DECISION TO BUY EQUIPMENT, OUR CPA DIRECTED US TO DO IT WITH A LEASE PURCHASE AGREEMENT WHEREAS THE CONSUMER MUST BE TOTALLY SATISFIED AND SIGNED A RELEASE FORM PRIOR TO BEING CHARGE. ONCE BELL SOUTH FAILED WITH THE INSTALLATION AND SERVICES THEIR REPRESENTATIVE MR. LARRY ANTONUCCI VISITED OUR LOCATIONS AND ASKED US TO SIGNED THE RELEASE PAPERS.

I REVIEW THEM AND RESPECTFULLY ASKED MR. ANTONUCCI TO WALK AROUND WITH ME AND INSPECT THE JOB. ONCE HE DID HE AGREED THAT JOB WAS INCOMPLETE AND WHILE THE PAPERS INDICATED THAT WORKED WAS FINISHED IT WAS NOT COMPLETE.

A FEW DAYS LATER THEY SENT MR. IGNACIO THE TECHNICIAN WITH A NEW SET OF PAPERS AGAIN TO OBTAIN MY SIGNATURE AND ACKNOWLEDGMENT OF COMPLETION AND SATISFACTION. AGAIN RIGHTFULLY I REFUSED.

IT WAS THEN THAT CONNIE PAGE FROM THE EQUIPMENT SIDE INFORMED ME THAT BELL SOUTH HAD OPTED TO REMOVE THE EQUIPMENT GIVING THIS FIRM A LIMITED AND CONDITIONAL LENGTH OFF TIME TO FIND, BUY, REPLACE AND INSTALL NEW EQUIPMENT (SEE LETTER WE PROVIDED). WE ASKED THEM TO PROVIDE US WITH THE $125.00 ANALOG CARD TO CONVERT THE SYSTEM FROM ISDN TO ANALOG. THIS WOULD AVOID THE INCONVENIENCE FOR THEM TO REMOVE THE EQUIPMENT WE WOULD ACCEPT THE EQUIPMENT ONLY AND NOT FORCE US TO INCURRED THE ADDITIONAL EXPENSES AND TIME CONSUMPTION TO FIND NEW EQUIPMENT, INSTALL ETC. THEY REFUSED STATING THAT BELL SOUTH WOULD NOT PROVIDE THE CARD ($125.00) BECAUSE IT WAS TO EXPENSIVE. THEY OPTED TO SPEND HOURS TO REMOVE EQUIPMENT.

SINCERELY YOURS,

MANUEL LORA

ABA PROFESSIONAL ASSOCIATION INC.

801 BRICKELL BAY DRIVE
TOWER-4 SUITE #662 MIAMI FL, 33131

Phone 1-800-222-4373 USA & Canada
1-800-344-8211 From The Caribbean
800-122-06 From Venezuela
0130-814747 From Germany
046-059416 From Switzerland

FAX 1-800-442-0497 From USA, Canada, & Caribbean ELSEWHERE 305-374-0497
LOCAL NUMBERS 305- 374-3131, 374-3162, 374-6404 374-0838,

E-MAIL ABAHERE@WORLDNET.ATT.NET

PUBLIC SERVICE COMMISSION
COMMUNICATIONS DIVISION
C/O SUE OLLELA

VOICE 1-850-413-6540
FAX 1-850-413-6541
FAX 1-800-511-0809

COMPLAINT # 237627R CONTINUATION.

APRIL 23,1999

I DID MY BEST IN ATTEMPTING TO EXPLAIN THAT BELLSOUTH'S ACTION FOR CHARGING US FOR INSTALLATION WERE IMPROPER AND UNETHICAL. IN THE ORAL AND WRITTEN AGREEMENT BETWEEN ABA AND BELLSOUTH IT WAS CLEARLY STIPULATED THAT THERE WILL BE NO CHARGE FOR INSTALLATION. ONCE AGAIN BELL SOUTH ACTED IMPROPERLY BY CHARGING FOR WHAT THEY HAD AGREED NOT TO CHARGE. WHEN THEY WERE CONFRONTED WITH THIS THEY HAD NO CHOICE BUT TO CREDIT THE ACCOUNT.

SINCERELY YOURS,

GARY MARCELIN

TO: MRS. OLLELA

1 PAGE

ABA PROFESSIONAL ASSOC. INC.
FROM: GARY MARCELIN

TO: Valued CSR / ABA Prof Assn
FAX #: 3053740497
Fax Overflow #: 3056313979

You should receive 9 pages including this cover sheet.

This fax cover sheet is provided to subscribers of BellSouth Business Fax Services Fax Overflow service. It acknowledges that the following pages were delayed in transmission to you because your fax machine was busy, out-of-paper, temporarily out-of-order, or shut off.

Thank you for using BellSouth Business Fax Services Fax Overflow service. If you have questions or need assistance, please call our Customer Service department at 1-800-986-9488.

FAX ID: 41j65721
Received: 7/22/98 02:35 PM
Printed: 7/22/98 08:45 PM

ATTN:
SUE OLLELA

TOTAL 6 PAGES

FROM: ABA PROFESSIONAL ASSOC., INC.
c/o
GARY MARCELIN
305 374 0838
x26

BELLSOUTH

ABA PROFSNL. ASSOC
Account Number: 305 374-0497 618 0441
Date: Dec 24, 1998

****
* SEE IMPORTANT NOTICE ENCLOSED *
****

***** PLEASE FOLD, TEAR HERE AND RETURN THIS PORTION WITH YOUR PAYMENT. *****

Please make check payable to BellSouth in U.S. funds.

305 374-0497 618 0441
Dec 24, 1998
MT B01 E000806

TOTAL AMOUNT DUE	AMOUNT PAID
$1,241.68	

☐ Check here if correspondence included.

#000806

ABA PROFSNL ASSOC
801 BRICKELL BAY DR
SUITE 662
MIA FL 33131-2937

P.O. BOX 33009
CHARLOTTE NC
28243-0001

305937404976180449999902010910300000000000124168000012416 8

BELLSOUTH

ABA TRVL GRP CORP
Account Number: 305 374-0838 923 0443
Date: Dec 24, 1998

****
* SEE IMPORTANT NOTICE ENCLOSED *
****

***** PLEASE FOLD, TEAR HERE AND RETURN THIS PORTION WITH YOUR PAYMENT. *****

Please make check payable to BellSouth in U.S. funds.

305 374-0838 923 0443
Dec 24, 1998
MT 801 E000809

TOTAL AMOUNT DUE	AMOUNT PAID
$690.99	

☐ Check here if correspondence included.

#000809

P.O. BOX 33009
CHARLOTTE NC
28243-0001

ABA TRVL GRP CORP
801 BRICKELL BAY DR
APT 662
MIA FL 33131-2937

30593740838923044999990201051030000000000006909900000690 99

&k^g

S A L E S / S E R V I C E O R D E R 3 Z 3 0 0 1 2 4 5 4 SR-1000

8-SEP-1998 07:47:26 AM FACTA( ) PRINT SEQUENCE
REQUESTOR BYGPPST PROD DEL PRINT SEQUENCE
PRINT DISTRIBTION:

SPOOLER

SouthEast

****
* CUSTOMER *
* NUMBER *
* 112615 *
****

I

****

ORDER TYPE N - NEW SYSTEM

ORDER NUMBER 3Z30012454 ORDER STATUS UE MA CODE CE STATUS DATE 08/28/98
CUSTOMER....: NUMBER 112615 FREEZE DATE 08/04/98
NAME ABA PROFESSIONAL ASSOC
* ADDRESS 1101 BRICKELL ~~AVE~~ #3104 60 Wrong. Bldg.
CITY MIAMI STATE FL ZIP 33131-
CONTACT MANUEL LORA/CEO PHONE (305)374-3131
INSTALLATION: NUMBER 112615001
NAME ABA PROFESSIONAL ASSOC Tower #4
ADDRESS 801 BRICKELL BAY DR., STE 662
CITY MIAMI STATE FL ZIP 33131-
CONTACT MANUEL LORA/CEO PHONE (305)374-3131
SHIPPING....: NAME ABA PROFESSIONAL ASSOC
ADDRESS1 801 BRICKELL BAY DR., STE
ADDRESS2 SUITE 662
CITY MIAMI STATE FL ZIP 33131-
CONTACT MANUEL LORA/CEO PHONE (305)374-3131

AE CODE 3Z300TJ NAM CODE
AGREEMENT NUMBER 97A000264
BASIC SYSTEM CODE 385 PCI CODE
SALE DATE..... 07/31/98
FACILITIES DATE. 07/31/98
RA NUMBER JOB NUMBER
GEO CODE 100250920 REVENUE CODE 2P11

HOLD FLAG N PAYMENT OPTION 018
MOJ DATE..... 08/07/98
ORIGINAL DUE DATE..... 08/11/98
SUBSEQUENT DUE DATE... 09/14/98
AUTHORITY..... BR2P110
CUSTOMER P.O. CONTRACT
LEASE NUMBER 00000-0067628-22001

SUB-TOTAL.....	$	7,877.68
LESS DISCOUNT.....	$	1,957.58
TOTAL PRODUCTS.....	$	5,920.10
PLUS TAX.....	$	0.00
PLUS SHIPPING.....	$	68.00
PLUS EXPEDITE CHGS..	$	0.00
ORDER TOTAL.....	$	5,988.10
LESS ADJUSTMENTS....	$	0.00
LESS PREPAYMENTS....	$	0.00
TOTAL DUE.....	$	5,988.10

5489.11 # 916 ~~[illegible]~~ AmK 23

IMPLEMENTOR NAME SARA RUIZ/JOINER PHONE (800)925-0010
TECHNICIAN ID ZSS011011373 NAME RAMIREZ IGNACIO

PLEASE FAX BACK TO 597-5979
SIGN LASTPAGE ONLY

NOTICE - NOT TO BE DISCLOSED OUTSIDE BELLSOUTH EXCEPT UNDER WRITTEN AGREEMENT

J1

September 16, 1998

A; B, A Travel Group
801 Brickell Bay Dr.
Suite 662
Miami, Fl. 33131

Dear Mr. Lora:

Per our conversation on Tuesday, September 15, 1998, the following features are not tariffed for ISDN service:

Call Waiting
Flexible Call Forwarding
Remote Access to Call Forwarding x
Fax Overflow Service

I have processed a Special Service Arrangement Request Form, document SF98-5156-00, to request the feasibility and pricing of these features. This process will take approximately 2 weeks. I will follow up with a contract when the Agreement has been processed.

If you require any additional information, please fax me a request at 1-800-330-5170.

Sincerely,

Elena Powanda
Project Manager II

A42. INTEGRATED SERVICES DIGITAL NETWORK (ISDN)

A42.1 ISDN - Business Service (IBS) (Cont'd)

A42.1.4 Rates and Charges (Cont'd)

F. Termination Charges

IBS lines placed in service under Rate Stability Plans after the effective date of this tariff will incur a Termination charge at the date of termination if the customer terminates or disconnects the service prior to fulfilling the period of the Rate Stability Plan. Termination Charges will not apply for IBS lines upgrading to another service offered by the Company with a contract period equal to or longer than the existing ISDN contract.

1. Termination Charge for 24-59 Mos. Rate Stability Plan if disconnected within:

	Termination Charges	USOC
(a) 1- 12 Months [1]	$300.00	LPED2
(b) 13-23 months	200.00	LPED3
(c) 24-58 months	100.00	LPED4

2. Termination Charge for 60-120 Mos. Rate Stability Plan if disconnected within:

(a) 1-23 months	300.00	LPEB5
(b) 24-59 months	200.00	LPEB6
(c) 60-119 months	100.00	LPED7

A42.1.5 Optional Features

Customers are required to subscribe to ISDN - Business Service (IBS) before ordering these features. Calling/Called Number Delivery and Call Hold are provided with this service. Features are available to increase the capability of IBS and may be subscribed to on an as needed basis. Availability of features are limited to where facilities permit and may be limited by central office type and switch load.

Note 1: This Termination Charge also applies at the date of termination if a customer terminates or disconnects prior to fulfilling the three months minimum service period.

Material appearing on this page previously appeared on page(s) 7 of this section.

ATTACHMENT K

BELLSOUTH Mobility

5201 Congress Ave, Ste A
P.O. Box 3050
Boca Raton, FL 33431-0950

Mobile Number: 954-592-2
Total Amount Due: 701
Due Before: 09/21.

AMOUNT PAID: $

*Please remit past due balance immediately

☐ Check here if address change: complete reverse side

Make check payable in U.S. currency drawn against a U.S. bank to:

BELLSOUTH Mobility

PO BOX 530013
ATLANTA GA 30353-00

AB 01 031164 22726 B 177 A

MARINA T CONTRERAS
%ABA PROFESSIONAL ASSOC
1101 BRICKELL AVE
P.O. BOX 310460
MIAMI FL 33231-0460

8 00020000000 95459228380 00000070193 5

Please Return TOP Portion With Payment.

BELLSOUTH Mobility

5201 Congress Ave, Ste A
P.O. Box 3050
Boca Raton, FL 33431-0950

For Customer Use		
Amount Paid	Date Paid	Check

For additional information on BellSouth and array of products and services, please visit us a Internet address at www.bellsouth.com.

MARINA T CONTRERAS
Bill Period Ending: 08/28/98
Mobile Number: 954-592-2838

Billing inquiries, call Customer Service 24 hours a day 930-1101

Total Past Due (Remit Immediately)	Current Monthly Charges	Other Credits & Charges	Total Amount Due
364.70	335.57	1.66	701.93

At this time, your account is reflecting a past due balance and is subject to interruption without further notification. We realize this could be an oversight on your part, so we would appreciate you taking the time to remit this balance immediately.

IBS V604 (1/97)

BELLSOUTH

BellSouth
Communication Systems
5555 Windward Parkway, Suite B
Alpharetta, Georgia 30201-3555

L

Manuel Lora
ABA Professional Association Inc.
1101 Brickell Ave.
Miami, FL 33131

Dear Mr. Lora:

We at BellSouth Communications Systems apologize for all the inconvenience caused during the process of replacing your analog lines to digital and the installation of the Norstar System. We know what it means to an organization like yours to be two days without communications. We have done everything in our power to solve the problem and have you up and running. Again we apologize for the inconvenience to you and your customers.

Sincerely,

Sara Ruiz
Account Executive

BELLSOUTH

L

BellSouth Cc
5555 Wind
Alpha

June 10, 1998
Manuel Lara.
ABA
905 S. Bayshore Drive
S1625, 1626
Miami, FL 33131

Dear Mr. Lara:

Thank you for your interest in the Norstar telephone system from BellSouth Communication Systems. BellSouth has the resources necessary to provide you with the best equipment and service available; just ask one of our 10,000 BellSouth Norstar customers.

The BellSouth Norstar system is fully digital, cost efficient, and its ease of use, feature rich sets and reliability are unsurpassed. - With nearly 6 million telephone sets in over 70 countries, ***Norstar is the #1 telephone system in the world.*** And that's because Norstar not only meets the needs of business; it anticipates them.

Enclosed is a proposal for a new BellSouth Norstar telephone system. The proposal outlines the equipment summary, which includes a one year warranty, and installation details. Should you have any questions about the enclosed material, please feel free to contact me at 800-782-7258.

Sincerely,

Sara Ruiz

Sara Ruiz
Account Executive

Attachment M

DOWN 9,027.98 -42.49 DOW 30 INDUSTRIALS	S&P 500 STOCK INDEX	1,181.38 -6.32
	NASDAQ STOCK INDEX	2,034.75 -5.89
	BONDS U.S. 30-YEAR	4.99% -.04%
	HERALD BLOOMBERG LOCAL INDEX	116.65 -.69

WEDNESDAY, DECEMBER 9, 1998

Telephone competition growing at slow pace

By DAVID POPPE
Herald Business Writer

Competition for local telephone customers heated up slightly this year, but BellSouth and other monopolies still control more than 98 percent of all local telephone lines in Florida, the Public Service Commission reports.

In its annual report on the telephone industry, the Florida PSC found 51 "alternative" companies now serve 194,000 business and residential phone lines in the state.

While that represents just 1.8 percent of total Florida phone lines, it is more than triple the level of a year ago, when there were 22 alternative companies serving 56,000 lines statewide.

Monopolies continue to dominate in Florida

[illegible] Communications [illegible] for local phone service in Panama City, compared with about 59 [illegible] BellSouth service.

The report, however, emphasizes that competition is starting to grow, nearly three years after Congress deregulated the local telephone industry.

"It should be noted that in spite of this modest growth in absolute terms, [alternative] residential lines and business lines have tripled," the PSC reports. "The overall increase . . . does indicate that [new companies] are making [illegible] efforts to enter the Florida telecommunications market."

The report gives a variety of reasons for the slow pace of competition. One is that BellSouth owns the phone lines that connect to South Florida homes and businesses. So even when alternative companies install their own equipment to direct phone traffic, they still must buy access to the Bell lines for the actual connection to customers. Alternative companies complain about the rates the PSC allows near-monopolies to charge for access and about poor service and technical difficulties they suffer at the hands of monopolies.

MCI, in fact, won a PSC arbitration complaint against BellSouth earlier this year over the quality of BellSouth, GTE and Sprint-Florida, which each control sections of Florida, serve 10.6 million lines statewide.

Among businesses, alternative companies control 4.3 percent of all local lines. But in the less-lucrative residential market, the alternative companies control 0.7 percent of lines.

Worse, many residential customers who use alternative local providers do so because they've been denied service from the incumbent carrier for non-payment of bills or bad credit history. One company

PLEASE SEE PHONES, 2C

phone competition increases at slow pace

PHONES FROM 1C

service BellSouth provides MCI's local phone unit.

However, BellSouth and other telecommunications companies also [illegible] many customers because their service is generally good, the report said. The PSC notes that it received just one "justified" complaint for every 25,000 BellSouth lines over the past year.

"I think that aside from the [illegible] of the market, I tend to [illegible] that as [illegible] full service almost [illegible]," said Spendlove, BellSouth spokesman. In Florida, for example, the PSC estimates between [illegible] percent and 10 percent of all business lines are served by alternative carriers. Design competition is growing.

Canton acknowledged that competition for residential customers is almost nonexistent, but he said the PSC is responsible. The PSC [illegible] BellSouth's rate for basic local phone service at $10.65 a month in South Florida, which is well below common return regulators set rates for business customers artificially high. BellSouth also earns big profits selling extras such as call waiting and caller ID and reaps subsidies from long distance companies for connecting their calls.

Because business rates are inflated and residential rates are artificially low, new companies focus on business customers, Canton said.

"If you are serious about increasing competition in the residential market, there has to be some modification" of rates.

Competitors, however, find fault with BellSouth. MCI complains BellSouth makes it difficult for customers to switch phone companies simply by dragging its feet processing orders.

"If this fine [illegible] in your order they'll [illegible] and they may or may not tell you what it is," says Joe Paluska, an MCI spokesman. Worse, he said, if an order contains more than one error, BellSouth often identifies the errors one at a time, forcing MCI to continually resubmit orders. The result is that customers can wait weeks for phone service, discouraging them from leaving BellSouth.

"Our experience has been that those systems aren't in place, and they are really crucial," Paluska says.

Federal law requires BellSouth to completely open its monopoly before it can [illegible] long distance and [illegible] vices" such as [illegible] access. Canton said BellSouth hopes to enter those businesses soon.

4

F

BellSouth
Communication Systems
5555 Windward Parkway, Suite B
Alpharetta, Georgia 30201-3885

November 16, 1998

Mr. Manuel Lora
ABA Professional Association, Inc.
1101 Brickell Avenue
Miami, FL 33131

Dear Mr. Lora:

Thank you for your continued willingness and participation in our attempts to resolve your outstanding issues. Our goal has been to satisfy your needs as well as keep you a BellSouth Communication Systems Norstar customer. Unfortunately, it appears we will not be able to do so with our Norstar system. Therefore, we would like to help you make provisions to choose another vendor. Upon choosing another equipment vendor, we can have your network re-installed to its prior state without charge. (although monthly recurring charges will apply) Future ISDN enhancements cannot be predicted, so no guarantees can be given regarding charges of future ISDN installations. Larry Antonucci will work with you to remove the existing Norstar system within the next month to supply as smooth a transition as possible. There will be no charge for this removal.

We apologize for the inconvenience to your business, but our intent is to make it as easy as possible to replace the Norstar system with a system that will satisfy your needs best.

Sincerely,

Connie Page

Connie Page
Sales Manager
BellSouth Sales Center

(1) ALL 5 RECEIPTS

No Document Payment Receipt

RF-9343
(11-96)

Customer Code	Check Digit
238	

/ GROUP.

BY A: #662

City: Miami State: Fl Zip Code: 33131

Please Check One

- [x] Payment $ 500.00
- [ ] Deposit $
- ID Type & Number: 305 374 0838
- [ ] Advance Payment $

Today

Thank You ...

We Appreciate Your Business!

Your payment will be posted to your BellSouth account within seconds.

*In order to save time in the future, please bring your telephone bill.... or you may **Mail Your Payment**.*

SEARS ADVENTH 2
35F PA P 042 12/01/98 $500.00 CK
AYM 305-374-0838-760 0441

Ply 1 - Customer's Copy

Ply 2 - Agency's Copy

BELLSOUTH

No Document Payment Receipt

RF-9343
(11-96)

Area Code	Telephone Number	Customer Code	Check Digit
305	374 · 3131	555	

Billing Name: ABA PROFESSIONAL

Street Address: 1101 BRICKELL AVE

City: MIAMI | State: FL. | Zip Code: 33231

Please Check One

- [x] Payment $ 343.46
- [ ] Deposit $
  ID Type & Number
- [ ] Advance Payment $

Thank You ...

We Appreciate Your Business!

Your payment will be posted to your BellSouth account within seconds.

*In order to save time in the future, please bring your telephone bill.... or you may **Mail Your Payment**.*

[illegible]

Ply 1 - Customer's Copy

Ply 2 - Agency's Copy

BELLSOUTH

No Document Payment Receipt

RF-9343 (11-96)

Area Code	Telephone Number	Customer Code	Check Digit
305	374.0838	360	

Billing Name: ABA PROFESSIONAL

Street Address: 1101 BRICKELL AVE

City: MIAMI State: FL. Zip Code: 33231

Please Check One

- [x] Payment $ 1283.89
- [ ] Deposit $
  ID Type & Number
- [ ] Advance Payment $

Thank You ...

We Appreciate Your Business!

Your payment will be posted to your BellSouth account within seconds.

*In order to save time in the future, please bring your telephone bill.... or you may **Mail Your Payment**.*

SEARS CRL GB 2
16F PA P 0103 12/08/98 1283.89 CKH
PAYM 305-374-0838 360 0441

Ply 1 - Customer's Copy

Ply 2 - Agency's Copy

BELLSOUTH

No Document Payment Receipt

RF-9343
(11-96)

Area Code	Telephone Number	Customer Code	Check Digit
305	374 · 6404	618	

Billing Name: ABA PROFESSIONAL

Street Address: 1101 BRICKELL AVE

City: MIAMI State: FL. Zip Code: 33231

Please Check One

- [x] Payment $ 63.87
- [ ] Deposit $
  ID Type & Number
- [ ] Advance Payment $

Thank You ...

We Appreciate Your Business!

Your payment will be posted to your BellSouth account within seconds.

*In order to save time in the future, please bring your telephone bill.... or you may **Mail Your Payment**.*

Ply 1 - Customer's Copy

Ply 2 - Agency's Copy

BELLSOUTH

RF-9041
(10-95)

Payment Receipt

Thank You...

We Appreciate Your Business!

Your payment will post to your BellSouth account within seconds.

SEARS ADVENTR 2
36F PA P 0047 12/12/98 $144.76 CK
PAYH 305-374-0836 357-040-E01

H

ISDN BUSINESS SERVICE
CONTRACTUAL ITEMS

Quantity	USOC	Description	Monthly Rate	Nonrecurring Charge
4	LQTTB	ISDN Access	220.00	
8	LQGFX	B Channel Circuit Switched Voice/Data	106.00	
	LQAFX	B Channel CSV/CSD	-0-	
				$724.00 WAIVED

ADDRESS: 801 Brickell Bay Drive Suite 662, Miami, FL 33131

SUBSCRIBER: ABA Professional Association

BY: _____ TITLE: C.E.O.

PRINT NAME: Manuel Mora

****

Do not fill in below this line

ACCEPTED: _____ 19__ BY: _____

TITLE: _____

&KOS

ATTACHMEN

I

S A L E S / S E R V I C E O R D E R 3 Z 3 0 0 1 :

11-NOV-1998 10:47:39 AM
REQUESTOR BYGPPST
PRINT DISTRIBTION:

SPOOLER

CLOSED CLOSED CLOSED CLOSED CLOSED CLOSED CLOSED CLOSED CLOSED
COMPLETED 09/14/98 COMPLETION ENTERED 09/16/98
****

ORDER TYPE N - NEW SYSTEM

ORDER NUMBER 3Z30012454 ORDER STATUS CP MA CODE CE STATUS DATE 08/28/98
FREEZE DATE 08/04/98

CUSTOMER....: NUMBER 112615
NAME ABA PROFESSIONAL ASSOC
ADDRESS 1101 BRICKELL ROAD #3104
CITY MIAMI STATE FL ZIP 33131-
CONTACT MANUEL LORA/CEO PHONE (305)374-3131

INSTALLATION: NUMBER 112615001
NAME ABA PROFESSIONAL ASSOC
ADDRESS 801 BRICKELL BAY DR., STE 662
CITY MIAMI STATE FL ZIP 33131-
CONTACT MANUEL LORA/CEO PHONE (305)374-3131

SHIPPING....: NAME ABA PROFESSIONAL ASSOC
ADDRESS1 801 BRICKELL BAY DR., STE
ADDRESS2 SUITE 662
CITY MIAMI STATE FL ZIP 33131-
CONTACT MANUEL LORA/CEO PHONE (305)374-3131

AE CODE 3Z300TJ NAM CODE
AGREEMENT NUMBER 97A000264
BASIC SYSTEM CODE 385 PCI CODE
SALE DATE..... 07/31/98
FACILITIES DATE. 07/31/98
RA NUMBER JOB NUMBER
GEO CODE 100250920 REVENUE CODE 2P11

HOLD FLAG N PAYMENT OPTION 018
MOJ DATE..... 08/07/98
ORIGINAL DUE DATE..... 08/11/98
SUBSEQUENT DUE DATE... 09/14/98
AUTHORITY..... BR2P110
CUSTOMER P.O. CONTRACT
LEASE NUMBER 00000-0067628-22001

SUB-TOTAL.....	$	7,213.68
LESS DISCOUNT.....	$	1,792.57
TOTAL PRODUCTS.....	$	5,421.11
PLUS TAX.....	$	0.00
PLUS SHIPPING.....	$	68.00
PLUS EXPEDITE CHGS..	$	0.00
ORDER TOTAL.....	$	5,489.11
LESS ADJUSTMENTS....	$	0.00
LESS PREPAYMENTS....	$	0.00
TOTAL DUE.....	$	5,489.11

IMPLEMENTOR NAME SARA RUIZ/JOINER PHONE (800)925-0010
TECHNICIAN ID ZSS011011373 NAME RAMIREZ IGNACIO (S.T.)

BELLSOUTH

ABA PROFSNL ASSOC
Account Number: 305 374-0838 360 0441
Bill Period Date: Dec 14, 1998
CKT: 70.1BSD.512986..SB

Thank you for choosing BellSouth. We sincerely appreciate your business.

Summary of Charges

	Amount
Previous Charges	
Amount of Last Bill	4,499.85
Less Payments	1,783.89CREDIT
Balance - Thank You for Your Payment	2,715.96
Current Charges	
BellSouth	
Monthly Service Charges	300.35
Local Usage	36.16
Other Charges and Credits	226.83
Itemized Calls	1.20
Taxes	86.12
Total Current Charges for BellSouth Companies	650.66
Charges for Other Companies	838.00
Total Current Charges Due Before Jan 5	1,488.66
Total Amount Due (See Messages for Charges Under Investigation)	$4,204.62

Important Notice(s)

Late Charge Reminder: A 1.5% Late Payment Charge will apply to any unpaid balance as of Jan 15.

Nonpayment of Regulated Charges may result in discontinuance of service. Failure to pay unregulated and certain other charges, all of which are identified by ** on your bill, will not result in an interruption of local service. The amount of Regulated Charges may be obtained by calling 1 800 858-9413.

(continued on page 2) ▶

***** PLEASE FOLD, TEAR HERE AND RETURN THIS PORTION WITH YOUR PAYMENT. *****

Please make check payable to BellSouth in U.S. funds.

CURRENT CHARGES DUE BEFORE	PAST DUE AMOUNT	TOTAL AMOUNT DUE	AMOUNT PAID
Jan 5	$2,715.96	$4,204.62	

305 374-0838 360 0441
Dec 14, 1998
AV 0112 B01 A001493

☐ Check here if correspondence included.

#001493 2 AV 0.46

P.O. BOX 70807
CHARLOTTE NC
28272-0807

ABA PROFSNL ASSOC
801 BRICKELL BAY DR
SUIT 662
MIA FL 33131-2937

305937408383600440112802010841100000000000271596000042046 2

&KOS

S A L E S / S E R V I C E O R D E R 3 Z 3 0 0 1 2 4 5 4

.1-NOV-1998 10:47:39 AM
'EQUESTOR BYCPPST
'RINT DISTRIBTION:

SPOOLER

****
* CUSTOMER *
* NUMBER *
* 112615 *
****

'LOSED CLOSED CLOSED CLOSED CLOSED CLOSED CLOSED CLOSED CLOSED CLOSED CLOSED
'OMPLETED 09/14/98 COMPLETION ENTERED 09/16/98

ORDER TYPE N - NEW SYSTEM

ORDER NUMBER 3Z30012454 ORDER STATUS CP MA CODE CE STATUS DATE 08/28/98
FREEZE DATE 08/04/98

CUSTOMER....: NUMBER 112615
NAME ABA PROFESSIONAL ASSOC
ADDRESS 1101 BRICKELL ROAD #3104
CITY MIAMI STATE FL ZIP 33131-
CONTACT MANUEL LORA/CEO PHONE (305)374-3131

INSTALLATION: NUMBER 112615001
NAME ABA PROFESSIONAL ASSOC
ADDRESS 801 BRICKELL BAY DR., STE 662
CITY MIAMI STATE FL ZIP 33131-
CONTACT MANUEL LORA/CEO PHONE (305)374-3131

SHIPPING....: NAME ABA PROFESSIONAL ASSOC
ADDRESS1 801 BRICKELL BAY DR., STE
ADDRESS2 SUITE 662
CITY MIAMI STATE FL ZIP 33131-
CONTACT MANUEL LORA/CEO PHONE (305)374-3131

AE CODE 3Z300TJ NAM CODE
AGREEMENT NUMBER 97A000264
BASIC SYSTEM CODE 385 PCI CODE
SALE DATE..... 07/31/98
FACILITIES DATE. 07/31/98
RA NUMBER JOB NUMBER
GEO CODE 100250920 REVENUE CODE 2P11

HOLD FLAG N PAYMENT OPTION 018
MOJ DATE..... 08/07/98
ORIGINAL DUE DATE..... 08/11/98
SUBSEQUENT DUE DATE... 09/14/98
AUTHORITY..... BR2P110
CUSTOMER P.O. CONTRACT
LEASE NUMBER 00000-0067628-22001

SUB-TOTAL.....	$	7,213.68
LESS DISCOUNT.....	$	1,792.57
TOTAL PRODUCTS.....	$	5,421.11
PLUS TAX.....	$	0.00
PLUS SHIPPING.....	$	68.00
PLUS EXPEDITE CHGS..	$	0.00
ORDER TOTAL.....	$	5,489.11
LESS ADJUSTMENTS....	$	0.00
LESS PREPAYMENTS....	$	0.00
TOTAL DUE.....	$	5,489.11

IMPLEMENTOR NAME SARA RUIZ/JOINER PHONE (800)925-0010
TECHNICIAN ID ZSS011011373 NAME RAMIREZ IGNACIO (S.T.)

ATTACHMEN

C

37

September 16, 1998

A; B, A Travel Group
801 Brickell Bay Dr.
Suite 662
Miami, Fl. 33131

Dear Mr. Lora:

Per our conversation on Tuesday, September 15, 1998, the following features are not tariffed for ISDN service:

Call Waiting
Flexible Call Forwarding
Remote Access to Call Forwarding
Fax Overflow Service

I have processed a Special Service Arrangement Request Form, document SF98-5156-00, to request the feasibility and pricing of these features. This process will take approximately 2 weeks. I will follow up with a contract when the Agreement has been processed.

If you require any additional information, please fax me a request at 1-800-330-5170.

Sincerely,

Elena Powanda
Project Manager II

ATTACHMENT D

BellSouth
Communication Systems
5555 Windward Parkway, Suite B
Alpharetta, Georgia 30201-3895

December 2, 1998

Mr. Manuel Lora
ABA Professional Association, Inc.
801 Brickell Bay Drive
Miami, FL 33131

Dear Mr. Lora:

After speaking to Larry Antonucci, he confirmed that there would not be any charges made to your company for installation or de-installation of the equipment. We will adjust the equipment bill to a zero balance. We will give you until the 23rd of December to have another vendor install equipment for you. Once you have a date that your new equipment will be installed, please contact Larry Antonucci to set up a time for him to come pick up our equipment. His number is (305) 597-5765.

In regards to your ISDN lines, vendor services has agreed to change your lines back to analog with no charge for the change. You are still required to pay your monthly service bills. With analog lines, you can have your old features, such as call waiting and remote call forwarding. We would need to know what date you would want your lines changed back as soon as possible so we do not miss your timeframe.

Please send me your response as soon as you get a chance.

Sincerely,

Connie Page

Connie Page
Sales Manager
BellSouth Sales Center

E

BellSouth
Communication Systems
5555 Windward Parkway, Suite B
Alpharetta, Georgia 30201-3898

December 1, 1998

Mr. Manuel Lora
ABA Professional Association, Inc.
801 Brickell Bay Drive
Miami, FL 33131

Dear Mr. Lora,

In reply to your last letter dated November 25, 1998, we can not give you the analog card for free. We have offered to take the equipment out for free and let you choose another vendor that can meet your needs. We can not give you any guarantees on when your requested features will be available on ISDN nor when the equipment will be compatible.

We are willing to convert your lines back to analog, but you must pay your monthly service bills. You have been getting service that you are obligated to pay for.

You have made it very clear that the network features are imperative to your business. For you to have these features, the best solution is for the lines to be converted back to analog and for you to either choose different equipment or for you to choose to add the analog card onto your lease.

Please let me know what you decide on as soon as possible and we will do what we need to do as quickly as we can.

Sincerely,

Connie Page

Connie Page
Sales Manager
BellSouth Sales Center

BELLSOUTH

BellSouth Business Systems, Inc.
Suite 1249
6451 N. Federal Highway
Fort Lauderdale, Florida 33308-1483

F

February 9,1999

ABA Professional Assoc.
% Manuel Lora
801 Brickell Bay Dr.
Miami, Fl. 33131

RE: 305 374-0497

Dear Mr. Lora:

Per our conversation today, this letter is confirmation that BellSouth has credited your accounts for the installation and monthly service of the ISDN services. In addition, the installation charges associated with the re-connection of analog business lines were also credited.

As of today, no further credits are due.

If you have any questions regarding this matter please call me at 954 958-6222.

Sincerely,

Elena Powanda
Project Manager

** Transmit Conf.Report **

Apr 27 '99 12:16

---> 8502228640	
No.	0004
Mode	NORMAL
Time	1'56"
Pages	4 Page(s)
Result	O K

ABA PROFESSIONAL ASSOCIATION INC.

801 BRICKELL BAY DRIVE
TOWER-4 SUITE #662 MIAMI FL, 33131

Phone 1-800-222-4373 USA & Canada
1-800-344-8211 From The Caribbean
800-122-06 From Venezuela
0130-814747 From Germany
046-059416 From Switzerland

FAX 1-800-442-0497 From USA, Canada, & Caribbean ELSEWHERE 305-374-0497
LOCAL NUMBERS 305- 374-3131, 374-3162, 374-6404 374-0838,

E-MAIL ABAHERE@WORLDNET.ATT.NET

PUBLIC SERVICE COMMISSION
COMMUNICATIONS DIVISION
C/O SUE OLLILA

VOICE 1-850-413-6540
FAX 1-850-413-6541
FAX 1-800-511-0809

RECEIVED
MAY 06 1999
CMU

COMPLAINT # 237627R CONTINUATION.

UPDATE REPORT

5/1/99 WE CONTINUE TO GET CALLS FROM BELL SOUTH REPRESENTATIVE.

BELL SOUTH IS REFUSING TO ACKNOWLEDGE FACTUAL DOCUMENTATION ON RECORDS..

A) THE AGREEMENT FOR ISDN INSTALLATION HAS A SPECIFIC DATE AND CONDITIONS. (ATTACHMENT #A)

B) BELL SOUTH ORIGINAL ATTEMPTS TO CONVERT FROM ANALOG TO ISDN FAILED CAUSING US NUMEROUS CONFLICTS AND PROBLEMS INCLUDING BEING OUT OF SERVICE FOR DAYS ON MORE THAN ONE OCCASION. WITHIN THAT SAME TIME FRAME CERTAIN SPECIFIC ACCOUNTS WERE CREATED WHICH DEPICTS TELEPHONE NUMBERS AND CODES. (SEE THEIR INVOICES MOOT ISSUES) 3333

C) AT SOME POINT AFTER SEVERAL WEEKS SERIOUS PROBLEMS AND CONFLICTS WERE DETECTED ONE OF MANY WAS DISCOVERING THAT UNBEKNOWNST TO US

ABA PROFESSIONAL ASSOCIATION INC.

801 BRICKELL BAY DRIVE
TOWER-4 SUITE #662 MIAMI FL, 33131

AND MOST BELL SOUTH CLIENTS (CONNIE GRUEN COMMENTS ON 12/98) THEY HAD PLACED ADAPTERS ON (374-0497) TO CONVERT ISDN FAX LINES TO ANALOGS. AFTER GIVING BELL SOUTH CONSIDERABLE AND AMPLE TIME TO RECTIFY AND CORRECT PROBLEMS (SEE LETTERS FROM ELENA POWANDA 2ETTERS)

D) BELL SOUTH THEN OPTED TO PLAY HARD BALL AND GAVE US CONDITIONAL AND LIMITED LENGTH OF TIME TO BUY AND REPLACED EQUIPMENT WHICH THEY WERE REMOVING FROM OUR PREMISES. (SEE LETTERS FROM CONNIE PAGE REF LARRY ANTONUCCI)

E) THIS ACTION TOOK PLACE EVEN THOUGH WE VOLUNTEER TO KEEP EQUIPMENT IF THEY PROVIDED AN ANALOG MODULE CARD ($125.00) WHICH WAS CHEAPER THAN REMOVING EQUIPMENT. THEY REFUSED.

F) THEY AGREED SERVICE WAS NOT COMPATIBLE NOR WHAT THEY HAD ORIGINALLY OFFERED THEY AGREED NOT TO CHARGE FOR SERVICE AT ALL SEE ATTACHED LETTER. (J ELENA POWANDA)

G) DURING THE TIME OF THE SERVICE WHICH THEY AGREED TO CREDIT THOSE SPECIFICS ACCOUNTS WE MADE PAYMENTS WHICH WE ARE ASKING TO BE CREDIT TO OUR NEW ACCOUNTS. SAME NUMBERS DIFFERENT CODES (ISDN & ANALOGS) G# SEE ATTACHED RECEIPTS.

H) BELL SOUTH REFUSES TO ACCEPT RESPONSIBILITY FOR ERRORS, NEGLECTS, DECEIVING AND OMISSIONS THEY CONTINUE TO PLAY HARD BALL. THEY HAVE PRESENTED IN A DECEIVING FASHION TO THE PSC THE ACTIONS. THEY SAID THEY HAD GIVEN CREDIT FOR THE INSTALLATION OF THE ISDN. THEY HAD TO AS PER OUR AGREEMENT (SEE ATTACHMENT # H)

I) THEY CLAIMS THEY GAVE CREDIT FOR THE EQUIPMENT. THEY HAD TO WE REFUSED TO SIGNED RELEASES EVERY TIME (SEE ATTACHMENT #I)

J) THEY CLAIM THEY PROVIDED SOME CREDIT FOR THE SERVICE, THEY HAVE TO CREDIT THE ACCOUNT IN FULL (SEE ATTACHMENT # LETTER FROM ELENA POWANDA)

J-1) THEY CLAIM THEY WAITED FOR US, IT WAS THE OTHER WAY AROUND SEE LETTER FROM ELENA POWANDA 1, 2 IN ATTACHMENT #C

J-2) WHAT IS MORE SIGNIFICANT IS THAT THEY NEVER INFORMED ABA PROFESSIONAL REPRESENTATIVES THAT ON LINE 374-0497 THEY WERE PLACING

ABA PROFESSIONAL ASSOCIATION INC.

801 BRICKELL BAY DRIVE
TOWER-4 SUITE #662 MIAMI FL, 33131

AN ADAPTER CONVERTING THE LINE FROM ISDN TO ANALOG HENCE, THERE WAS NEVER A NEED FOR SAID ISDN SERVICE. YET THEY KNEW THAT ABA HAD INVESTED SERIOUS AMOUNTS OF MONEY WITH OTHER VENDORS FOR SAID ISDN EQUIPMENT. CONFIRMED BY TECHNICIAN IGNACIO RAMIREZ AND SUPERVISOR LARRY ANTONUCCI. AND COORDINATOR CONNIE GRUEN (

K) ADDITIONALLY WE HAD THE NUMBERS TRANSFER TO A CELLULAR NUMBER DURING THE DAYS WHICH WE HAD NO SERVICE. BELL SOUTH HAS NEVER VOLUNTEER TO PAY FOR THOSE CHARGES WHICH WERE CAUSED BY THEIR NEGLIGENCE, EQUIPMENT, MISTAKES, ERRORS ETC. (ATTACHMENT #K)

WE WANTS ALL CREDITS FOR PAYMENTS MADE DURING THE TIME FRAME, PLUS ANY OTHER COMPENSATIONS WHICH WE ARE ENTITLED TO LEGALLY, FAIR AND JUST.

L) COPY OF LETTER FROM BELL SOUTH SALES REPRESENTATIVE SARAH RUIZ EXPLAINING SYSTEM IS FULLY DIGITAL. (NOT SO)

M) COPY OF NEWSPAPER ARTICLE FROM 12/1998 ON BELL SOUTH TACTICS COMPLAIN

N) THERE IS A DEPOSIT OF BELL SOUTH EQUIPMENT WHICH IT HAS NOT BEEN RETURNED AS OF YET.

SINCERELY YOURS,

GARY MARCELIN

ATTACHMENT

A

With BellSouth's colorful army of business solutions, you can always be there for your customer's needs

Save up to $1110 — ISDN PRI Voice/Data (Contracts of 24 Months)
- Free installation of ISDN PRI

Save up to $251 — ISDN BRI (Contracts of 24 Months)
- Free installation of ISDN BRI

Save up to $2225 — Frame Relay (Contracts of 24 Months)
- Free installation of Frame Relay

Save up to $1400 — Channelized Megalink* (Contracts of 24 Months)
- Free installation of Megalink* Channel Service

TO: Valued CSR / ABA Prof Assn
FAX #: 3053740497
Fax Overflow #: 3056313979

You should receive 9 pages including this cover sheet.

This fax cover sheet is provided to subscribers of BellSouth Business Fax Services Fax Overflow service. It acknowledges that the following pages were delayed in transmission to you because your fax machine was busy, out-of-paper, temporarily out-of-order, or shut off.

Thank you for using BellSouth Business Fax Services Fax Overflow service. If you have questions or need assistance, please call our Customer Service department at 1-800-986-9488.

FAX ID: 41j65721
Received: 7/22/98 02:35 PM
Printed: 7/22/98 08:45 PM

BellSouth.net Packaged Fractional Frame Relay Access (Contracts of 24 Months)

Save up to $1150

- Up to 1.544 Mbps
- Waiver of BellSouth.net service installation charges
- Contract terms of 24 months: first 4 months monthly recurring charges for BellSouth.net service waived
- Contract terms of 36 months: first 6 months monthly recurring charges for BellSouth.net service waived

BellSouth.net ISDN 128k LAN Dedicated Internet Access w/Shared Web Hosting

Save up to $750

$200 rebate on BellSouth.net ISDN 128k LAN Internet Access/Shared Web Hosting (when purchased together)
- Netopia 675 ISDN Router available at up to $350 discount off retail (when purchased with ISDN 128K LAN Access Service)
- $50 Rebate when Web Hosting purchased separately

Call your Account Representative or 1-800-338-6500

Offer good through 9/30/98
Services Available Only Where Facilities Permit

*Service requires ISDN service to operate

Monthly service charges and non recurring service order charges will apply
Applicable tariffs outline requirements, terms, and conditions apply

BELLSOUTH

ABA PROFSNL. ASSOC
Account Number: 305 374-0497 618 0441
Date: Dec 24, 1998

****
* SEE IMPORTANT NOTICE ENCLOSED *
****

B

***** PLEASE FOLD, TEAR HERE AND RETURN THIS PORTION WITH YOUR PAYMENT. *****

Please make check payable to BellSouth in U.S. funds.

305 374-0497 618 0441
Dec 24, 1998
MT 801 E000806

TOTAL AMOUNT DUE	AMOUNT PAID
$1,241.68	

☐ Check here if correspondence included.

#000806

ABA PROFSNL ASSOC
801 BRICKELL BAY DR
SUITE 662
MIA FL 33131-2937

P.O. BOX 33009
CHARLOTTE NC
28243-0001

305937404976180449999902010910300000000000124168000012416 8

BELLSOUTH

ABA PROFSNL ASSOC 305 374-0838 559 0448
Account Number: Dec 24, 1998
Date:

****
* SEE IMPORTANT NOTICE ENCLOSED *
****

***** PLEASE FOLD, TEAR HERE AND RETURN THIS PORTION WITH YOUR PAYMENT. *****

Please make check payable to BellSouth in U.S. funds.

305 374-0838 559 0448
Dec 24, 1998
MT 801 E000808

TOTAL AMOUNT DUE	AMOUNT PAID
$196.59	

☐ Check here if correspondence included.

#000808

ABA PROFSNL ASSOC
801 BRICKELL BAY DR
SUIT 662
MIA FL 33131-2937

P.O. BOX 33009
CHARLOTTE NC
28243-0001

30593740838559044999990201051030000000000001965900000019659

BELLSOUTH

A*B*A PROFESSIONAL ASSOCIATION
Account Number: 305 374-6404 618 0448
Bill Period Date: Sep 14, 1998

Thank you for choosing BellSouth. We sincerely appreciate your business.

Summary of Charges

	Amount
Previous Charges	
Amount of Last Bill	74.01
Less Payments	.00
Balance	74.01
Current Charges	
BellSouth	
Other Charges and Credits	8.09CREDIT
Taxes	2.05CREDIT
Total Current Charges for BellSouth Companies	10.14CREDIT
Total Current Charges Due Before Oct 2	10.14CREDIT
Total Amount Due	63.87

Important Notice(s)

Please note: This is your final bill. See message following the BellSouth Current Charges.

Helpful Numbers

BellSouth Telecommunications, Inc. (BST)

NOTE: Numbers for other companies are listed on their bill pages.

Billing Questions or to Place an Order:	
If calling from within the Florida BellSouth service area	305 780-2800
If calling from outside Florida or outside the Florida BellSouth service area	1-800-753-8172
Repair:	
If calling from within the Florida BellSouth service area	305 780-2222

(continued on page 2) ▶

***** PLEASE FOLD, TEAR HERE AND RETURN THIS PORTION WITH YOUR PAYMENT. *****

Please make check payable to BellSouth in U.S. funds.

CURRENT CHARGES DUE BEFORE	PAST DUE AMOUNT	TOTAL AMOUNT DUE	AMOUNT PAID
Oct 2	$74.01	$63.87	

305 374-6404 618 0448
Sep 14, 1998
AM 1014 FXX B01 A005482

☐ Check here if correspondence included.

P.O. BOX 70807
CHARLOTTE NC
28272-0807

#005482 1 AB 0.26
A*B*A PROFESSIONAL
ASSOCIATION
1101 BRICKELL AV
BOX 310460
MIA FL 33231-0460

305937464046180449999812010450200000000000007401000006387

BELLSOUTH

ABA PROFSNL ASSOC
Account Number: 305 374-0838 360 0441
Bill Period Date: Dec 14, 1998
CKT: 70.IBSD.512986..SB

Thank you for choosing BellSouth. We sincerely appreciate your business.

Summary of Charges

	Amount
Previous Charges	
Amount of Last Bill	4,499.85
Less Payments	1,783.89CREDIT
Balance - Thank You for Your Payment	2,715.96
Current Charges	
BellSouth	
Monthly Service Charges	300.35
Local Usage	36.16
Other Charges and Credits	226.83
Itemized Calls	1.20
Taxes	86.12
Total Current Charges for BellSouth Companies	650.66
Charges for Other Companies	838.00
Total Current Charges Due Before Jan 5	1,488.66
Total Amount Due (See Messages for Charges Under Investigation)	4,204.62

Important Notice(s)

Late Charge Reminder: A 1.5% Late Payment Charge will apply to any unpaid balance as of Jan 15.

Nonpayment of Regulated Charges may result in discontinuance of service. Failure to pay unregulated and certain other charges, all of which are identified by ** on your bill, will not result in an interruption of local service. The amount of Regulated Charges may be obtained by calling 1 800 858-9413.

(continued on page 2) ▶

***** PLEASE FOLD, TEAR HERE AND RETURN THIS PORTION WITH YOUR PAYMENT. *****

Please make check payable to BellSouth in U.S. funds.

CURRENT CHARGES DUE BEFORE	PAST DUE AMOUNT	TOTAL AMOUNT DUE	AMOUNT PAID
Jan 5	$2,715.96	$4,204.62	

305 374-0838 360 0441
Dec 14, 1998
AV 0112 B01 A001493

☐ Check here if correspondence included.

0001493 2 AV 0.46

P.O. BOX 70807
CHARLOTTE NC
28272-0807

ABA PROFSNL ASSOC
801 BRICKELL BAY DR
SUIT 662
MIA FL 33131-2937

3059374083836004401128020108411000000000002715960000420462

6KOS

S A L E S / S E R V I C E O R D E R 3 Z 3 0 0 1 2 4 5 4

.1-NOV-1998 10:47:39 AM
'EQUESTOR BYCPPST
'RINT DISTRIBTION:
SPOOLER

```
************
* CUSTOMER *
*  NUMBER  *
*  112615  *
************
```

'LOSED CLOSED CLOSED CLOSED CLOSED CLOSED CLOSED CLOSED CLOSED CLOSED CLOSED
'OMPLETED 09/14/98 COMPLETION ENTERED 09/16/98

****

ORDER TYPE N - NEW SYSTEM

ORDER NUMBER 3Z30012454 ORDER STATUS CP MA CODE CE STATUS DATE 08/28/98
CUSTOMER....: NUMBER 112615 FREEZE DATE 08/04/98
NAME ABA PROFESSIONAL ASSOC
ADDRESS 1101 BRICKELL ROAD #3104
CITY MIAMI STATE FL ZIP 33131-
CONTACT MANUEL LORA/CEO PHONE (305)374-3131
INSTALLATION: NUMBER 112615001
NAME ABA PROFESSIONAL ASSOC
ADDRESS 801 BRICKELL BAY DR., STE 662
CITY MIAMI STATE FL ZIP 33131-
CONTACT MANUEL LORA/CEO PHONE (305)374-3131
SHIPPING....: NAME ABA PROFESSIONAL ASSOC
ADDRESS1 801 BRICKELL BAY DR., STE
ADDRESS2 SUITE 662
CITY MIAMI STATE FL ZIP 33131-
CONTACT MANUEL LORA/CEO PHONE (305)374-3131

AE CODE 3Z300TJ NAM CODE HOLD FLAG N PAYMENT OPTION 018
AGREEMENT NUMBER 97A000264 MOJ DATE..... 08/07/98
BASIC SYSTEM CODE 385 PCI CODE ORIGINAL DUE DATE..... 08/11/98
SALE DATE..... 07/31/98 SUBSEQUENT DUE DATE... 09/14/98
FACILITIES DATE. 07/31/98 AUTHORITY..... BR2P110
RA NUMBER JOB NUMBER CUSTOMER P.O. CONTRACT
GEO CODE 100250920 REVENUE CODE 2P11 LEASE NUMBER 00000-0067628-22001

SUB-TOTAL.....	$	7,213.68
LESS DISCOUNT.....	$	1,792.57
TOTAL PRODUCTS.....	$	5,421.11
PLUS TAX.....	$	0.00
PLUS SHIPPING.....	$	68.00
PLUS EXPEDITE CHGS..	$	0.00
ORDER TOTAL.....	$	5,489.11
LESS ADJUSTMENTS....	$	0.00
LESS PREPAYMENTS....	$	0.00
TOTAL DUE.....	$	5,489.11

IMPLEMENTOR NAME SARA RUIZ/JOINER PHONE (800)925-0010
TECHNICIAN ID ZSS011011373 NAME RAMIREZ IGNACIO (S.T.)

From: PATRICIA @ SMTP (Patricia A. Godsil) {Patricia.A.Godsil@bridge.bellsou
To: Nancy Cortijo-Simmonds
Subject: 237627-R ABA

==NOTE==========12/23/98==5:02pm==========

Return-Path: <Patricia.A.Godsil@bridge.bellsouth.com>
Received: from carnac.bst.bellsouth.com (198.79.17.65)
by mail.psc.state.fl.us (Connect2-SMTP 4.30A.1000128)
for <NCORTIJO@PSC.STATE.FL.US>; Wed, 23 Dec 1998 16:57:54 -0500
Received: from bos16960.al.bst.bls.com ([90.11.244.149])
by carnac.bst.bellsouth.com (Netscape Messaging Server 3.52)
with ESMTP id AAA3DF0 for <NCORTIJO@PSC.STATE.FL.US>;
Wed, 23 Dec 1998 16:02:49 -0600
Received: from a1244034 ([90.11.244.34]) by bos16960.al.bst.bls.com
(Netscape Messaging Server 3.52) with ESMTP id AAA26A4
for <NCORTIJO@PSC.STATE.FL.US>; Wed, 23 Dec 1998 16:02:39 -0600
Received: by a1244034
(1.37.109.24/16.2) id AA103280556; Wed, 23 Dec 1998 16:02:36 -0600
Received: by bridge.bst.bls.com
(1.0/1.0) id H0000b7c07c92ccd; Wed, 23 Dec 1998 16:02:30 -0600
Date: Wed, 23 Dec 1998 16:02:19 -0600
From: Patricia A. Godsil <Patricia.A.Godsil@bridge.bellsouth.com>
Subject: 237627-R ABA
Message-Id: <H0000b7c07c92ccd@bridge.bst.bls.com>
To: Nancy Cortijo-simmonds <NCORTIJO@PSC.STATE.FL.US>

12-23-98

FROM: Pat Godsil
BellSouth

RE: ABA
305-374-0838

CASE NO. 237627-R

Our investigation reveals that the customer has been generally unhappy with his service from BellSouth since he converted from analog to ISDN (digital) service. There are features that Mr. Lora used with his analog service that are not compatible with the ISDN service. Attempts were made to accommodate the customer by issuing a 'Special Assembly', however there appears to be no option other than to convert the service back to analog to gain access to these particular features.

A conference call was held on December 15, 1998, at 2:00 p.m. In attendance were Mr. Lora, John Jenkins, Service Manager, BellSouth Business Repair Center, and Elaina Powanda, BellSouth Vendor Services. Mr. Lora's concerns with his service were discussed along with specific issues relative to installation charges and conversion back to analog service. Ms. Powanda agreed to adjust the account for past installation charges totaling $1989.36 that were incurred when the service was converted back to analog after the initial conversion to ISDN.

Also, Mr. Lora decided to convert two of his three Basic Rate ISDN (BRI) services which include four of his telephone numbers back to analog to utilize the custom calling features. This configuration seemed to better meet the customer's requirements.

It was agreed that there would be no installation charges for this conversion back to analog service, however, the customer is responsible

for the recurring monthly charges.

Mr. Lora agreed to place the orders and provide Ms. Powanda the information required to convert the four numbers back to analog service.

Following is information concerning equipment that the customer purchased from BellSouth in association with the ISDN service:

The customer purchased telephone equipment from us at the end of July. The system is ISDN compatible, but unable to support network features that Mr. Lora is requesting. Ms. Connie Page, supervisor, spent many hours on the phone with Mr. Lora and also with technical support trying to satisfy his needs. Unfortunately, we can not meet his needs, so we have agreed to take the system back and adjust the order to reflect no charge for the equipment. The equipment order totaled $5,489.11.

1989.36
5489.11
7478.47

Attachment D

Printed by Nancy Cortijo-Simmonds 2/09/99 8:47am

From: PATRICIA @ SMTP (Patricia A. Godsil) (Patricia.A.Godsil@bridge.bellsou
To: Nancy Cortijo-Simmonds
Subject: 237627R ABA PROF ASSOC.

===NOTE==========2/05/99==2:50pm==========

Return-Path: <Patricia.A.Godsil@bridge.bellsouth.com>
Received: from carnac.bst.bellsouth.com (198.79.17.65)
by mail.psc.state.fl.us (Connect2-SMTP 4.30A.1000128)
for <NCORTIJO@PSC.STATE.FL.US>; Fri, 5 Feb 1999 14:54:55 -0500
Received: from bos16960.al.bst.bls.com ([90.11.244.149])
by carnac.bst.bellsouth.com (Netscape Messaging Server 3.52)
with ESMTP id AAA5AC4 for <NCORTIJO@PSC.STATE.FL.US>;
Fri, 5 Feb 1999 13:51:37 -0600
Received: from a1244034 ([90.11.244.34]) by bos16960.al.bst.bls.com
(Netscape Messaging Server 3.52) with ESMTP id AAA34CC
for <NCORTIJO@PSC.STATE.FL.US>; Fri, 5 Feb 1999 13:50:57 -0600
Received: by a1244034
(1.37.109.24/16.2) id AA028824254; Fri, 5 Feb 1999 13:50:54 -0600
Received: by bridge.bst.bls.com
(1.0/1.0) id H0000b7c07e93e63; Fri, 5 Feb 1999 13:50:51 -0600
Date: Fri, 5 Feb 1999 13:50:30 -0600
From: Patricia A. Godsil <Patricia.A.Godsil@bridge.bellsouth.com>
Subject: 237627R ABA PROF ASSOC.
Message-Id: <H0000b7c07e93e63@bridge.bst.bls.com>
To: Nancy Cortijo-simmonds <NCORTIJO@PSC.STATE.FL.US>

2-5-99

FROM: Pat Godsil
BellSouth

RE: ABA Professional Association
305-374-0838

CASE NO. 237627R (SUPPLEMENTAL INQUIRY)

Our investigation reveals that upon receipt of the supplemental inquiry, Ms. Elena Powanda, BellSouth Vendor Services, spoke to Mr. Lora regarding the letter dated January 11, 1999.

Mr. Lora was questioning the amount of credits BellSouth would be issuing on account 305 374-0497. Ms. Powanda advised Mr. Lora that per their conversation in December, 1998, all installation and monthly charges associated with the ISDN lines would be adjusted. *

Ms. Powanda advised Mr. Lora that the adjustment for the last line would be $544.43 plus taxes.

4/27/99

STATE OF FLORIDA

PUBLIC SERVICE COMMISSION

2540 SHUMARD OAK BOULEVARD
TALLAHASSEE, FL 32399-0850

TO:

Mary Rose Sirianni

Fax 2228640

FROM:

Suzanne Ollila

Fax: (850) 413-6541

Voice: (850) 413-6540

RE:

lastest fax ABA

Total # of pages (including cover): 4

Attached is latest fax from ABA - not referencing any new complaints, but merely adding background, per Gary ~~&~~ Marcelin. I did explain to Gary the "installation credit" refers to installation from digital back to analog. He wasn't aware that ~~last~~ there are costs to transfer service back.

Hope ~~my~~ everyone's feeling better

ABA PROFESSIONAL ASSOCIATION INC.

801 BRICKELL BAY DRIVE
TOWER-4 SUITE #662 MIAMI FL, 33131

Phone 1-800-222-4373 USA & Canada
1-800-344-8211 From The Caribbean
800-122-06 From Venezuela
0130-814747 From Germany
046-059416 From Switzerland

FAX 1-800-442-0497 From USA, Canada, & Caribbean ELSEWHERE 305-374-0497
LOCAL NUMBERS 305- 374-3131, 374-3162, 374-6404 374-0838,

E-MAIL ABAHERE@WORLDNET.ATT.NET

PUBLIC SERVICE COMMISSION
COMMUNICATIONS DIVISION
C/O SUE OLLELA

VOICE 1-850-413-6540
FAX 1-850-413-6541
FAX 1-800-511-0809

COMPLAINT # 237627R CONTINUATION.

APRIL 23,1999

I DID MY BEST IN ATTEMPTING TO EXPLAIN THAT BELLSOUTH'S ACTION FOR CHARGING US FOR INSTALLATION WERE IMPROPER AND UNETHICAL. IN THE ORAL AND WRITTEN AGREEMENT BETWEEN ABA AND BELLSOUTH IT WAS CLEARLY STIPULATED THAT THERE WILL BE NO CHARGE FOR INSTALLATION. ONCE AGAIN BELL SOUTH ACTED IMPROPERLY BY CHARGING FOR WHAT THEY HAD AGREED NOT TO CHARGE. WHEN THEY WERE CONFRONTED WITH THIS THEY HAD NO CHOICE BUT TO CREDIT THE ACCOUNT.

SINCERELY YOURS,

GARY MARCELIN

ABA PROFESSIONAL ASSOCIATION INC.

801 BRICKELL BAY DRIVE
TOWER-4 SUITE #662 MIAMI FL, 33131

Phone 1-800-222-4373 USA & Canada
1-800-344-8211 From The Caribbean
800-122-06 From Venezuela
0130-814747 From Germany
046-059416 From Switzerland

FAX 1-800-442-0497 From USA, Canada, & Caribbean ELSEWHERE 305-374-0497
LOCAL NUMBERS 305- 374-3131, 374-3162, 374-6404 374-0838,

E-MAIL. ABAHERE@WORLDNET.ATT.NET

PUBLIC SERVICE COMMISSION
COMMUNICATIONS DIVISION
C/O SUE OLLELA

VOICE 1-850-413-6540
FAX 1-850-413-6541
FAX 1-800-511-0809
CONFIRM
COMPLAINT # 237627R CONTINUATION.

APRIL 26, 1999

BRIEF FOR MS OLLELA , I SINCERELY HOPE THAT THE INFORMATION PROVIDED TO YOU WAS SUFFICIENT TO ASSIST IN DETERMINING THAT THE PAYMENTS AS DEPICTED IN PRIOR REPORTS WERE NOT PROPERLY CREDITED.

I UNDERSTAND HOW THE PRESENTATION MADE BY BELL SOUTH REPRESENTATIVES MAKE THEM LOOK AS THEY HAVE GIVEN OR ADJUSTED THE ACCOUNT FOR THOUSANDS OF DOLLARS. THE REALITY IS FAR FROM THE PICTURE THEY PROVIDE PRESENTING THEMSELVES AS NICE KIND PERSONS.

IT IS UNEQUIVOCALLY FROM THE CONTRACT FOR INSTALLATION WE FAX TO YOU THAT THE STIPULATION WITHIN SAID AGREEMENT WAS FOR NO INSTALLATION FEES.

ADDITIONALLY WE HAD PAID FOR PRIVATE INDIVIDUALS (EX BELL SOUTH)TECHNICIANS TO DO THE WIRING AT A MUCH LOWER COST THAN BELL SOUTH CHARGES. THEY (BELL SOUTH) REPRESENTATIVES INSPECTED THIS LOCATION

ABA PROFESSIONAL ASSOCIATION INC.

801 BRICKELL BAY DRIVE
TOWER-4 SUITE #662 MIAMI FL, 33131

AND FOUND THE WIRING WAS IN COMPLIANCE AND EQUIVALENT TO THEIR SPECIFICATIONS.

AS TO THE EQUIPMENT REFUND THEY HAD NO CHOICE. WHEN THIS FIRM MADE THE DECISION TO BUY EQUIPMENT, OUR CPA DIRECTED US TO DO IT WITH A LEASE PURCHASE AGREEMENT WHEREAS THE CONSUMER MUST BE TOTALLY SATISFIED AND SIGNED A RELEASE FORM PRIOR TO BEING CHARGE. ONCE BELL SOUTH FAILED WITH THE INSTALLATION AND SERVICES THEIR REPRESENTATIVE MR. LARRY ANTONUCCI VISITED OUR LOCATIONS AND ASKED US TO SIGNED THE RELEASE PAPERS.

I REVIEW THEM AND RESPECTFULLY ASKED MR. ANTONUCCI TO WALK AROUND WITH ME AND INSPECT THE JOB. ONCE HE DID HE AGREED THAT JOB WAS INCOMPLETE AND WHILE THE PAPERS INDICATED THAT WORKED WAS FINISHED IT WAS NOT COMPLETE.

A FEW DAYS LATER THEY SENT MR. IGNACIO THE TECHNICIAN WITH A NEW SET OF PAPERS AGAIN TO OBTAIN MY SIGNATURE AND ACKNOWLEDGMENT OF COMPLETION AND SATISFACTION. AGAIN RIGHTFULLY I REFUSED.

IT WAS THEN THAT CONNIE PAGE FROM THE EQUIPMENT SIDE INFORMED ME THAT BELL SOUTH HAD OPTED TO REMOVE THE EQUIPMENT GIVING THIS FIRM A LIMITED AND CONDITIONAL LENGTH OFF TIME TO FIND, BUY, REPLACE AND INSTALL NEW EQUIPMENT (SEE LETTER WE PROVIDED). WE ASKED THEM TO PROVIDE US WITH THE $125.00 ANALOG CARD TO CONVERT THE SYSTEM FROM ISDN TO ANALOG. THIS WOULD AVOID THE INCONVENIENCE FOR THEM TO REMOVE THE EQUIPMENT WE WOULD ACCEPT THE EQUIPMENT ONLY AND NOT FORCE US TO INCURRED THE ADDITIONAL EXPENSES AND TIME CONSUMPTION TO FIND NEW EQUIPMENT, INSTALL ETC. THEY REFUSED STATING THAT BELL SOUTH WOULD NOT PROVIDE THE CARD ($125.00) BECAUSE IT WAS TO EXPENSIVE. THEY OPTED TO SPEND HOURS TO REMOVE EQUIPMENT.

SINCERELY YOURS,

MANUEL LORA

BELLSOUTH

RF-9041
(10-95)

Payment Receipt

Thank You...

We Appreciate Your Business!

Your payment will post to your BellSouth account within seconds.

BEARS ADVENTR 2
36F PA P 0047 12/13/98 $144.76 CK
PAYM 305-374-0838 359-0440-001

1FB

BELLSOUTH

No Document Payment Receipt

RF-0343 (11-96)

Area Code	Telephone Number	Customer Code	Check Digit
305	374 · 3131	555	

Billing Name: ABA PROFESSIONAL

Street Address: 1101 BRICKELL AVE

City: MIAMI Fl. State: Zip Code: 33231

Please Check One

- [x] Payment $ 343.46
- [ ] Deposit $
- ID Type & Number
- [ ] Advance Payment $

Thank You ...

We Appreciate Your Business!

Your payment will be posted to your BellSouth account within seconds.

In order to save time in the future, please bring your telephone bill.... or you may Mail Your Payment.

SEARS CRL SB 2
16F PA P 0103 12/08/[illegible] 343.46 CKM
PAYM 305-374-3131 [illegible] 0443

Ply 1 - Customer's Copy Ply 2 - Agency's Copy

BELLSOUTH

No Document Payment Receipt

RF-0343 (11-96)

Area Code	Telephone Number	Customer Code	Check Digit
305	374 · 6404	618	

Billing Name: ABA PROFESSIONAL

Street Address: 1101 BRICKELL AVE

City: MIAMI State: Fl. Zip Code: 33231

Please Check One

- [x] Payment $ 63.87
- [ ] Deposit $
- ID Type & Number
- [ ] Advance Payment $

Thank You ...

We Appreciate Your Business!

Your payment will be posted to your BellSouth account within seconds.

In order to save time in the future, please bring your telephone bill.... or you may Mail Your Payment.

SEARS CRL SB 2
16F PA P 0103 12/08/[illegible] 63.87 CKM
PAYM 305-374-6404-[illegible]

Ply 1 - Customer's Copy Ply 2 - Agency's Copy

BELLSOUTH

No Document Payment Receipt

RF-9343 (11-96)

Area Code	Telephone Number	Customer Code	Check Digit

Billing Name

Street Address

City State Zip Code

Please Check One

- ☐ Payment $
- ☐ Deposit $
- ID Type & Number
- ☐ Advance Payment $

Thank You ...

We Appreciate Your Business!

Your payment will be posted to your BellSouth account within seconds.

In order to save time in the future, please bring your telephone bill.... or you may Mail Your Payment.

Ply 1 - Customer's Copy

Ply 2 - Agency's Copy

BELLSOUTH

No Document Payment Receipt

RF-9343 (11-96)

Area Code	Telephone Number	Customer Code	Check Digit
305	374 0838	360	

Billing Name: ABA PROFESSIONAL

Street Address: 1101 BRICKELL AVE

City: MIAMI State: FL Zip Code: 33231

Please Check One

- ☑ Payment $ 1283.87
- ☐ Deposit $
- ID Type & Number
- [ ] Advance Payment $

Thank You ...

We Appreciate Your Business!

Your payment will be posted to your BellSouth account within seconds.

In order to save time in the future, please bring your telephone bill.... or you may Mail Your Payment.

Ply 1 - Customer's Copy

Ply 2 - Agency's Copy

BELLSOUTH

BellSouth Communication Systems
5555 Windward Parkway, Suite B
Alpharetta, GA 30201-3895

June 10, 1998
Manuel Lara.
ABA
905 S. Bayshore Drive
S1625, 1626
Miami, FL 33131

Dear Mr. Lara:

Thank you for your interest in the Norstar telephone system from BellSouth Communication Systems. BellSouth has the resources necessary to provide you with the best equipment and service available; just ask one of our 10,000 BellSouth Norstar customers.

The BellSouth Norstar system is fully digital, cost efficient, and its ease of use, feature rich sets and reliability are unsurpassed. - With nearly 6 million telephone sets in over 70 countries, ***Norstar is the #1 telephone system in the world.*** And that's because Norstar not only meets the needs of business; it anticipates them.

Enclosed is a proposal for a new BellSouth Norstar telephone system. The proposal outlines the equipment summary, which includes a one year warranty, and installation details. Should you have any questions about the enclosed material, please feel free to contact me at 800-782-7258.

Sincerely,

Sara Ruiz

Sara Ruiz
Account Executive

TO: Valued CSR / ABA Prof Assn
FAX #: 3053740497
Fax Overflow #: 3056313979

You should receive 9 pages including this cover sheet.

This fax cover sheet is provided to subscribers of BellSouth Business Fax Services Fax Overflow service. It acknowledges that the following pages were delayed in transmission to you because your fax machine was busy, out-of-paper, temporarily out-of-order, or shut off.

Thank you for using BellSouth Business Fax Services Fax Overflow service. If you have questions or need assistance, please call our Customer Service department at 1-800-986-9488.

FAX ID: 41165721
Received: 7/22/98 02:35 PM
Printed: 7/22/98 08:45 PM

BELLSOUTH

BellSouth
Communication Systems
5600 Windward Parkway, Suite B
Alpharetta, Georgia 30201-3835

Manuel Lora
ABA Professional Association Inc.
1101 Brickell Ave.
Miami, FL 33131

Dear Mr. Lora:

We at BellSouth Communications Systems apologize for all the inconvenience caused during the process of replacing your analog lines to digital and the installation of the Norstar System. We know what it means to an organization like yours to be two days without communications. We have done everything in our power to solve the problem and have you up and running. Again we apologize for the inconvenience to you and your customers.

Sincerely,

Sara Ruiz
Account Executive

BELLSOUTH

BellSouth
Communication Systems
5555 Windward Parkway, Suite B
Alpharetta, Georgia 30201-3886

December 2, 1998

Mr. Manuel Lora
ABA Professional Association, Inc.
801 Brickell Bay Drive
Miami, FL 33131

Dear Mr. Lora:

After speaking to Larry Antomucci, he confirmed that there would not be any charges made to your company for installation or de-installation of the equipment. We will adjust the equipment bill to a zero balance. We will give you until the 23rd of December to have another vendor install equipment for you. Once you have a date that your new equipment will be installed, please contact Larry Antomucci to set up a time for him to come pick up our equipment. His number is (305) 597-5765.

In regards to your ISDN lines, vendor services has agreed to change your lines back to analog with no charge for the change. You are still required to pay your monthly service bills. With analog lines, you can have your old features, such as call waiting and remote call forwarding. We would need to know what date you would want your lines changed back as soon as possible so we do not miss your timeframe.

Please send me your response as soon as you get a chance.

Sincerely,

Connie Page

Connie Page
Sales Manager
BellSouth Sales Center

374-3131

Memorandum

To: Mr. Manwell Lora

From: Doris W. Freeman

Date: 11/03/98

Re: Repair Service Representative

Mr. Lora,

This Memorandum acknowledges that we discussed problems that you encountered with Angela Barnes checking on trouble ticket 468610. Angela was informally counseled at that time.

BellSouth Business appreciates your business. It is our goal to provide Excellent Customer Service. To obtain this goal we know it requires the Best employees servicing our customers.

Bell South

Dear Ann: My wife and I recently visited her 86-year-old mother in Oklahoma. While we were there, she asked us to look at her telephone bill, which showed lease charges for four phones at $4.45 each. She had been paying these lease charges for over 23 years. We discovered that one of the phones had been taken out of her house 20 years before, and two phones had not been used for over 15 years.

I wonder how many senior citizens are unknowingly paying lease charges for old phones that are no longer in use.

Bob in Grand Prairie, Texas

Most people today buy their phones. However, it wouldn't hurt for my readers to take a good, hard look at their next phone bill and see if there are any incorrect leasing charges.

Attachment B

ATTN:
SUE OLLELA

TOTAL 6 PAGES

FROM: ABA PROFESSIONAL ASSOC., INC.
c/o
GARY MARCELIN
305 374 0838
x26

BELLSOUTH

ABA PROFSNL. ASSOC
Account Number: 305 374-0497 618 0441
Date: Dec 24, 1998

****
* SEE IMPORTANT NOTICE ENCLOSED *
****

***** PLEASE FOLD THAT HERE AND RETURN THIS PORTION WITH YOUR PAYMENT. *****

Please make check payable to BellSouth in U.S. funds.

305 374-0497 618 0441
Dec 24, 1998
MT B01 E000806

TOTAL AMOUNT DUE	AMOUNT PAID
$1,241.68	

☐ Check here if correspondence included.

#000806

ABA PROFSNL ASSOC
801 BRICKELL BAY DR
SUITE 662
MIA FL 33131-2937

P.O. BOX 33009
CHARLOTTE NC
28243-0001

30593740497618044999990201091030000000000012416800001241 68

BELLSOUTH

ABA TRVL GRP CORP
Account Number: 305 374-0838 923 0443
Date: Dec 24, 1998

****
* SEE IMPORTANT NOTICE ENCLOSED *
****

***** PLEASE FOLD, TEAR HERE AND RETURN THIS PORTION WITH YOUR PAYMENT. *****

Please make check payable to BellSouth in U.S. funds.

305 374-0838 923 0443
Dec 24, 1998
MT 801 E000809

TOTAL AMOUNT DUE	AMOUNT PAID
$690.99	

☐ Check here if correspondence included.

#000809

ABA TRVL GRP CORP
801 BRICKELL BAY DR
APT 662
MIA FL 33131-2937

P.O. BOX 33009
CHARLOTTE NC
28243-0001

305937408389230449999902010510300000000000069099000006909 9

BELLSOUTH

ABA PROFSNL ASSOC
Account Number: 305 374-0838 559 0448
Date: Dec 24, 1998

****
* SEE IMPORTANT NOTICE ENCLOSED *
****

***** PLEASE FOLD, TEAR HERE AND RETURN THIS PORTION WITH YOUR PAYMENT. *****

Please make check payable to BellSouth in U.S. funds.

305 374-0838 559 0448
Dec 24, 1998
MT 801 E000808

TOTAL AMOUNT DUE	AMOUNT PAID
$196.59	

☐ Check here if correspondence included.

#000808

ABA PROFSNL ASSOC
801 BRICKELL BAY DR
SUIT 662
MIA FL 33131-2937

P.O. BOX 33009
CHARLOTTE NC
28243-0001

305937408365590449999902010510300000000000019659000001965 9

BELLSOUTH

A*B*A PROFESSIONAL ASSOCIATION
Account Number: 305 374-6404 618 0448
Bill Period Date: Sep 14, 1998

Thank you for choosing BellSouth. We sincerely appreciate your business.

Summary of Charges

	Amount
Previous Charges	
Amount of Last Bill	74.01
Less Payments	.00
Balance	74.01
Current Charges	
BellSouth	
Other Charges and Credits	8.09CREDIT
Taxes	2.05CREDIT
Total Current Charges for BellSouth Companies	10.14CREDIT
Total Current Charges Due Before Oct 2	10.14CREDIT
Total Amount Due	63.87

Important Notice(s)

Please note: This is your final bill. See message following the BellSouth Current Charges.

Helpful Numbers

BellSouth Telecommunications, Inc. (BST)

NOTE: Numbers for other companies are listed on their bill pages.

Billing Questions or to Place an Order:	
If calling from within the Florida BellSouth service area	305 780-2800
If calling from outside Florida or outside the Florida BellSouth service area	1-800-753-8172
Repair:	
If calling from within the Florida BellSouth service area	305 780-2222

(continued on page 2) ▶

***** PLEASE FOLD, TEAR HERE AND RETURN THIS PORTION WITH YOUR PAYMENT. *****

Please make check payable to BellSouth in U.S. funds.

CURRENT CHARGES DUE BEFORE:	PRE-DUE PAYMENT AMOUNT	TOTAL AMOUNT DUE	AMOUNT PAID
Oct 2	$74.01	$63.87	

305 374-6404 618 0448
Sep 14, 1998
AM 1014 FXX B01 A005482

☐ Check here if correspondence included.

P.O. BOX 70807
CHARLOTTE NC
28272-0807

$005482 1 AB 0.26
A*B*A PROFESSIONAL
ASSOCIATION
1101 BRICKELL AV
BOX 310460
MIA FL 33231-0460

305937464046180449999812010450200000000000007401000006387

LST BL	LST BL	LST BL	LST BL	LST BL	LST BL
PAID	PAID	PAID	PAID	PAID	PAID
ADJ	ADJ	ADJ	ADJ	ADJ	ADJ
BAL	BAL	BAL	BAL	BAL	BAL
OC&C	OC&C	OC&C	OC&C	OC&C	OC&C
DA	DA	DA	DA	DA	DA
CCG	CCG	CCG	CCG	CCG	CCG
TOT	TOT	TOT	TOT	TOT	TOT
DA CLM	DA CLM	DA CLM	DA CLM	DA CLM	DA CLM
+LPC(DA)	+LPC(DA)	+LPC(DA)	+LPC(DA)	+LPC(DA)	+LPC(DA)
TOT CLM	TOT CLM	TOT CLM	TOT CLM	TOT CLM	TOT CLM
LS DUE	LS DUE	LS DUE	LS DUE	LS DUE	LS DUE

BL DTE	BL DTE	BL DTE 9-14-98	BL DTE 10-14-98	BL DTE	BL DTE
LST BL	LST BL	LST BL	LST BL 1241.14	LST BL	LST BL
PAID	PAID	PAID	PAID -0-	PAID	PAID
ADJ	ADJ	ADJ 1206.13	ADJ	ADJ	ADJ
BAL	BAL	BAL 1206.13	BAL 1241.14	BAL	BAL
OC&C	OC&C	OC&C	OC&C	OC&C	OC&C
		Edward 59.90			
		wb			
DA	DA	DA	DA	DA	DA
CCG	CCG	CCG 35.01	CCG .54	CCG	CCG
TOT	TOT	TOT 1241.14	TOT 1241.68	TOT	TOT
DA CLM	DA CLM	DA CLM	DA CLM	DA CLM	DA CLM
+LPC(DA)	+LPC(DA)	+LPC(DA)	+LPC(DA)	+LPC(DA)	+LPC(DA)
TOT CLM	TOT CLM	TOT CLM	TOT CLM	TOT CLM	TOT CLM
LS DUE	LS DUE	LS DUE 1241.14	LS DUE 1241.68	LS DUE	LS DUE
		9-98	10-98		

2-5 374-01497-618

LST BL	LST BL 2701.45	LST BL 4499.85	LST BL 4204.62	LST BL	LST BL
PAID	PAID	PAID 1783.89	PAID	PAID	PAID
ADJ	ADJ	ADJ	ADJ 4204.62	ADJ	ADJ
BAL	BAL	BAL 2715.96	BAL 0	BAL	BAL
OC&C	OC&C	OC&C	OC&C	OC&C	OC&C
ATT 1143.03	Hold 35.00	ATT 708.86	ATT 83.67		
Telecom 8.40		LRC 29.93	HOLD 35.00		
HOLD 35.00		HOLD 99.21			
DA	DA	DA	DA	DA	DA
CCG 2701.45	CCG 1798.40	CCG 1488.66	CCG 130.20	CCG	CCG
TOT 2701.45	TOT 4499.85	TOT 4204.62	TOT 130.20	TOT	TOT
DA CLM	DA CLM	HOLD DA CLM 70.00	DA CLM	DA CLM	DA CLM
+LPC(DA)	+LPC(DA)	+LPC(DA)	+LPC(DA)	+LPC(DA)	+LPC(DA)
TOT CLM 2701.45	TOT CLM 4499.85	TOT CLM 4204.62	TOT CLM 13	TOT CLM	TOT CLM
LS DUE 10-14-98	LS DUE 11-14-98	LS DUE 12-14-98	LS DUE 1-14-99	LS DUE	LS DUE

BL DTE 1-14-99	BL DTE	BL DTE	BL DTE	BL DTE	BL DTE
LST BL 994.68	LST BL	LST BL	LST BL	LST BL	LST BL
PAID	PAID	PAID	PAID	PAID	PAID
ADJ 934.75	ADJ	ADJ	ADJ	ADJ	ADJ
BAL 1915.41	BAL	BAL	BAL	BAL	BAL
OC&C	OC&C	OC&C	OC&C	OC&C	OC&C
ATT 173.47					
DA	DA	DA	DA	DA	DA
CCG 1863.92	CCG	CCG	CCG	CCG	CCG
TOT 1863.92	TOT	TOT	TOT	TOT	TOT
DA CLM + Rec case	DA CLM	DA CLM	DA CLM	DA CLM	DA CLM
+LPC(DA) Non OTO	+LPC(DA)	+LPC(DA)	+LPC(DA)	+LPC(DA)	+LPC(DA)
TOT CLM 1929.16	TOT CLM	TOT CLM	TOT CLM	TOT CLM	TOT CLM
LS DUE 1-14-99	LS DUE	LS DUE	LS DUE	LS DUE	LS DUE

205-374-0838-360 / 205-374-0497-361

LST BL	LST BL 330.30	LST BL	LST BL	LST BL	
PAID	PAID Ø	PAID	PAID	PAID	PAID
ADJ	ADJ	ADJ	ADJ	ADJ	ADJ
BAL	BAL 330.30	BAL	BAL	BAL	BAL
OC&C	OC&C	OC&C	OC&C	OC&C	OC&C
DA	DA	DA	DA	DA	DA
CCG 330.30	CCG 63.92cl	CCG	CCG	CCG	CCG
TOT 330.30	TOT 266.38	TOT	TOT	TOT	TOT
DA CLM	DA CLM	DA CLM	DA CLM	DA CLM	DA CLM
+LPC(DA)	+LPC(DA)	+LPC(DA)	+LPC(DA)	+LPC(DA)	+LPC(DA)
TOT CLM 330.30	TOT CLM 266.38	TOT CLM	TOT CLM	TOT CLM	TOT CLM
LS DUE	LS DUE	LS DUE	LS DUE	LS DUE	LS DUE
6-1-98	7-1-98				

BL DTE	BL DTE	BL DTE	BL DTE	BL DTE	BL DTE
LST BL	LST BL	LST BL	LST BL	LST BL	LST BL
PAID	PAID	PAID	PAID	PAID	PAID
ADJ	ADJ	ADJ	ADJ	ADJ	ADJ
BAL	BAL	BAL	BAL	BAL	BAL
OC&C	OC&C	OC&C	OC&C	OC&C	OC&C
DA	DA	DA	DA	DA	DA
CCG	CCG	CCG	CCG	CCG	CCG
TOT	TOT	TOT	TOT	TOT	TOT
DA CLM	DA CLM	DA CLM	DA CLM	DA CLM	DA CLM
+LPC(DA)	+LPC(DA)	+LPC(DA)	+LPC(DA)	+LPC(DA)	+LPC(DA)
TOT CLM	TOT CLM	TOT CLM	TOT CLM	TOT CLM	TOT CLM
LS DUE	LS DUE	LS DUE	LS DUE	LS DUE	LS DUE

305-374-2075-606

STATE OF FLORIDA

Commissioners:
JOE GARCIA, CHAIRMAN
J. TERRY DEASON
SUSAN F. CLARK
JULIA L. JOHNSON
E. LEON JACOBS, JR.

DIVISION OF
TELECOMMUNICATIONS
WALTER D'HAESELEER
DIRECTOR
(850) 413-6600

Public Service Commission

April 26, 1999

MaryRose Sirianni
BellSouth Telecommunications, Inc.
150 South Monroe Street, Suite 400
Tallahassee, FL 32301-1556

Re: Complaint of ABA Professional Association, Inc.

Dear Ms. Sirianni:

As we have discussed, Consumer Affairs, which had been handling ABA Professional Association, Inc.'s (ABA) complaints regarding its ISDN service, turned over ABA's most recent complaint to the Telecommunications Division because Consumer Affairs believes that the Division of Telecommunications is better able to provide a final resolution of ABA's complaint. The original complaint number was 237627R.

ABA's description of its recent complaint is contained in Attachment A, ABA's April 16, 1999 fax to me. There are three other attachments to this letter. Attachment B is a copy of ABA's April 19, 1999 fax to me. Attachment C is a copy of a December 23, 1998 E-mail from Pat Godsil to Nancy Cortijo-Simmonds of Consumer Affairs. Attachment D is a copy of a February 9, 1999 E-mail from Pat Godsil to Nancy Cortijo-Simmonds. The individual complaints are discussed below.

ABA's claim that during the initial conversion from analog service to digital ISDN, service was interrupted because of installation problems BellSouth was experiencing.

Was the customer's service interrupted during the conversion from analog service to digital ISDN? If so, how long was service interrupted and was the customer credited for the service interruption? If ABA was credited, when was it credited, and for how much? If ABA was not credited, what is the amount the customer should be credited, and when will ABA be credited?

Claim of incomplete credits provided by BellSouth for unsatisfactory ISDN service.

ABA made five payments to BellSouth in December 1998, totaling $2,335.98. The payments were $500.00 (12/4/98), $1,283.89, $343.46, $63.87 (12/8/98), and $144.76

? ?

Sincerely,

Suzanne Ollila
Economic Analyst

Enclosures (4)

cc: Manuel Lora

Attachment A

ABA PROFESSIONAL ASSOCIATION INC.

(13)

801 BRICKELL BAY DRIVE
TOWER-4 SUITE #662 MIAMI FL, 33131

Phone 1-800-222-4373 USA & Canada
1-800-344-8211 From The Caribbean
800-122-06 From Venezuela
0130-814747 From Germany
046-059416 From Switzerland

GARY
305 374 0838
x26

FAX 1-800-442-0497 From USA, Canada, & Caribbean ELSEWHERE 305-374-0497
LOCAL NUMBERS 305- 374-3131, 374-3162, 374-6404 374-0838,

E-MAIL ABAHERE@WORLDNET.ATT.NET

APRIL 14, 1999

PUBLIC SERVICE COMMISSION
COMMUNICATIONS DIVISION
C/O SUE OLLELA

VOICE 1-850-413-6540
FAX 1-800-511-0809
CONFIRM
COMPLAINT #237627R CONTINUATION.

REPORT # 37

SUBJECT : ATTACHED DOCUMENTS,

IN THE MONTHS OF JUNE AND JULY ABA ENTERTAIN SEVERAL PROPOSALS MADE BY BELL SOUTH REPRESENTATIVE, SARAH RUIZ FROM THEIR HOME OFFICE IN ATLANTA. THE DOCUMENTED AND FACTUAL EVIDENCE IS CONCLUSIVE. BELL SOUTH IN THE MONTH OF JULY CONVINCED AND SOLD ABA ISDN EQUIPMENT AND SERVICE WITH THE FOLLOWING UNDERSTANDING.

A) THE EQUIPMENT AND SERVICE WOULD IMPROVE SIGNIFICANTLY AND BETTER, IMPROVE ABA PRESENT EQUIPMENT AND SERVICE TO THAT OF STATE OF THE ART..

B) INSTALLATION AGREEMENT BETWEEN ABA AND BELL SOUTH CALLED TO BE FREE (NO CHARGE) TO BE INITIATED AND COMPLETED BY SPECIFIC DATES. THE ULTIMATE RESULTS WERE AS FOLLOW :

ABA PROFESSIONAL ASSOCIATION INC.

801 BRICKELL BAY DRIVE
TOWER-4 SUITE #662 MIAMI FL, 33131

1) IN ANTICIPATION OF THESE UPCOMING CHANGES TO A NEW STATE OF THE ART PHONE EQUIPMENT AND SYSTEM. ABA PURCHASED ISDN (DIGITAL) COMPUTERIZED EQUIPMENT, FROM OTHER VENDORS INCLUDING MODEMS TO FUNCTION ACCORDINGLY WITH THE NEWLY PURCHASED/LEASED PHONE EQUIPMENT & LINES FROM BELL SOUTH.

2) THE DATES OF EQUIPMENT INSTALLATION (COMMITMENT DATES) WERE NEVER MET. BELL SOUTH STAFF. DATES OF COMMITMENT WERE CHANGED ON DIFFERENT OCCASIONS. THE INITIAL DATE WAS FOR SOMETIME IN AUGUST.

3) ABA PRINCIPALS (M. LORA) NOTICING BELL SOUTH CONTINUOS INABILITY TO COMPLY WITH INITIAL PROMISES HAD CONCERN AND REQUESTED THAT THE INSTALLATION BE DONE IN A SEQUENTIAL ORDER, WHEREAS THE LINES BE CONVERTED FROM ANALOG TO ISDN ONE AT A TIME. TILL THEY WERE ALL SUCCESSFULLY COMPLETED. IF THE INITIAL ATTEMPT FAILED ONLY ONE OR TWO LINES WOULD BE OUT OF SERVICE FOR A LIMITED LENGTH OF TIME.

4) BELL SOUTH UNDERSTANDING THEIR MISTAKES, BLUNDERS, UNDERSTOOD AND AGREED ORALLY TO ABA REQUEST CONVERTING ONE LINE AT A TIME.

THE LETTER OF APOLOGY ALONG WITH THE FACTUAL RECORDS UNEQUIVOCALLY DEMONSTRATE THAT THE BELL SOUTH FAILED TO COMPLY WITH ALL OF THEIR PROMISES AND COMMITMENTS AS WELL AS HIDING SIGNIFICANT INFORMATION THAT CAUSED SERIOUS FINANCIAL LOSSES TO ABA.

INSTALLATION DATES NOR THE SPECIFIC INSTRUCTIONS WERE MET, THE EQUIPMENT FAILED TO PROVIDE THE SERVICE WHICH WAS TO BE EQUAL OR BETTER. YET ABA WAS COOPERATIVE AT ALL TIMES GRANTING BELL SOUTH REPRESENTATIVES AMPLE TIME TO RESOLVE THE MANY CONFLICTING PROBLEMS WITH THE NEW EQUIPMENT.

DURING THIS TIME ABA ENCOUNTER SERIOUS CONFLICTS WITHIN THEIR MODERNIZED COMPUTERIZED FAX SOFTWARE WITH THE NEWLY PURCHASED DIGITAL (ISDN) MODEMS AND ISDN LINES. WHILE CONSULTING AND TROUBLE SHOOTING, TECHNICIANS TESTING THE DIGITAL MODEMS DISCOVER THE PHONES LINES WERE NOT RESPONDING (SPEED) AS NORMAL ISDN LINES. THEY DIRECTED ABA PRINCIPALS TO INQUIRE WITH THE ISDN PROVIDER (BELL SOUTH) AS TO THESE CONFLICTS. THEY FELT THE LINES WERE NO ISDN.

BELL SOUTH DISPATCHED A TECHNICIAN IGNACIO RAMIREZ WHOM WAS THEIR KEY PERSON IN THE MANY PHASES OF THE INSTALLATION AND CONVERSION MR. RAMIREZ EXPLAINED TO ABA PRINCIPALS THE FOLLOWING.

ABA PROFESSIONAL ASSOCIATION INC.

801 BRICKELL BAY DRIVE
TOWER-4 SUITE #662 MIAMI FL, 33131

BELL SOUTH PLACED AN ADAPTER IN THE EQUIPMENT SOLD TO ABA CONVERTING THE ISDN FAX LINES BACK TO ANALOG. HENCE ABA DID NOT HAVE ISDN SERVICE AT THEIR COMPUTER FAX TERMINALS. THIS WAS A COMPLETE SURPRISE TO ABA WHOM WAS NEVER INFORMED OF SUCH ADAPTER.

BELL SOUTH LETTERS CLEARLY DEPICT THAT THEY WERE NOT ABLE TO RESOLVE THE MANY CONFLICTS WITHIN THE SYSTEM. EVEN THOUGH ABA GAVE BELL SOUTH AMPLE TIME NEVER LIMITING IT.

CONNIE PAGE EQUIPMENT SALES MANAGER BECAME INVOLVED. WHILE DOING SO SHE REALIZED THE SYSTEM WAS NOT COMPATIBLE WITH BELL SOUTH SOFTWARE FOR BASIC FEATURES WE HAD WITH OUR PRIOR ANALOG SERVICE SUCH AS CALL FORWARDING, TRANSFER CALLS, CONFERENCE CALLS ETC. THIS FINDINGS PROMPTED HER TO E-MAIL ALL SALES STAFF FOR BELL SOUTH. TO INFORM ALL FUTURES BUYERS OF SUCH CONFLICTS OR PROBLEM.

THE ISSUE ASSOCIATED WITH THE ADAPTER PLACED ON THE EQUIPMENT CONVERTING THE COSTLY ISDN (DIGITAL) LINES BACK TO ANALOG WAS NEVER RESOLVED BECAUSE BELL SOUTH OPTED TO TAKE EQUIPMENT BACK.

IT IS UNEQUIVOCAL THAT BELL SOUTH ATTEMPTED AND CONTINUES TO ATTEMPT TO CHARGE ABA FOR THE ISDN (DIGITAL) SERVICE THAT WAS NEVER PROVIDED. PLACING ADAPTERS UNBEKNOWNST TO THEIR CUSTOMERS WAS, IS AND WILL ALWAYS BE A DECEITFUL ACT. NOT INFORMING CUSTOMERS THAT THERE IS NO NEED FOR ISDN SERVICE BECAUSE THEY UNBEKNOWNST TO CUSTOMERS BELL SOUTH PLACES ADAPTERS TO CONVERT TO ANALOG WHILE CHARGING THEM FOR ISDN. IS IMPROPER, TO ATTEMPT TO COLLECT FOR THIS IS UNETHICAL.

THERE ARE SEVERAL DAYS OF INTERRUPTED OR OUT OF SERVICE DURING THEIR FAILURES TO CONVERT ANALOG TO ISDN FOR WHICH BELL SOUTH HAS NOT GIVEN ABA CREDIT FOR. BELL SOUTH NEVER OFFER NOR VOLUNTEER TO ASSIST OR PAY FOR THE INVESTMENTS MADE BY ABA FOR THE ISDN MODEMS PURCHASED BY ABA FROM OUTSIDE VENDOR.

ABA ATTEMPTED AT ALL TIMES TO ACT IN GOOD FAITH. WHEN BELL SOUTH ASKED FOR TIME ALLOW 3-4 MONTHS AT LEAST. BELL SOUTH REFUSING TO CREDIT THE PAYMENT MADE BY ABA FOR THE SERVICE WHICH WAS NOT PROVIDED AND FOR WHICH BELL SOUTH HAS ALREADY ACKNOWLEDGE AND GIVEN CREDIT FOR MOST OF IT IS UNEXPLAINABLE.

WHEN ABA WAS INFORMED BY BELL SOUTH REPRESENTATIVE CONNIE PAGE THE EQUIPMENT INABILITY TO PROVIDE ISDN COMPATIBLE SERVICE TO

ABA PROFESSIONAL ASSOCIATION INC.

801 BRICKELL BAY DRIVE
TOWER-4 SUITE #662 MIAMI FL, 33131

PREVIOUS ANALOG WITH THE NEWLY SOLD EQUIPMENT. ABA SUGGESTED THAT BELL SOUTH PROVIDED AN ANALOG CARD MODULE ($125.00 RETAIL) CONVERTING THE EXISTING ISDN EQUIPMENT TO ANALOG AVOIDING REFUND OF PURCHASE, REMOVAL, CREDITS, PURCHASE, INSTALLATION ETC.

BELL SOUTH REFUSED AND EMPHATICALLY STATED THEY PICK UP EQUIPMENT AND GAVE ABA 2 WEEKS TO FIND EQUIPMENT, INSTALLER AND INSTALL IT BE READY BY A CERTAIN DATELINE. (CONNIE)

DURING THE INITIAL INSTALLATION BELL SOUTH UNABLE TO INSTALL THE ISDN SERVICE DUE TO THEIR FAULTY DEFECTIVE EQUIPMENT LEFT ABA WITHOUT SERVICE FOR SEVERAL DAYS. ABA IN IT'S ATTEMPTS TO AVOID TOTAL INTERRUPTION WITHOUT MEANS OF COMMUNICATIONS ASKED BELL SOUTH SUPERVISOR TO TRANSFER ALL CALLS TO A CELLULAR PHONE WHICH INCURRED HUNDREDS OF DOLLARS FOR SERVICE.

IT IS DIFFICULT TO UNDERSTAND BELL SOUTH ACTIONS. IT IS HARD TO UNDERSTAND BELL SOUTH LACK OF SENSITIVITY AFTER THE NUMEROUS PROBLEMS THEY HAVE CAUSED ABA YOU WOULD THINK THEY WOULD PROVIDE US WITH SOME SORT OF SIGNIFICANT COMPENSATION. INSTEAD THEY HAVE OPTED TO ATTEMPT TO CHARGE US FOR SERVICES WHICH THEY ACKNOWLEDGE WAS IMPROPER AND HAVE PROVIDED CREDITS, ADJUSTMENTS FOR SAME.

ATTACHMENTS : PAYMENT	**RECEIPT**	**FOR**	**374-0838**	**FOR**		**$ 500.00**	**ON 12/04/98**
"	"	"	"	"	"	**$ 1,283.89**	**ON 12/08/98**
"	"	"	"	**3131**	"	**$ 343.46**	**ON 12/08/98**
"	"	"	"	**6404**		**$ 63.87**	**ON 12/08/98**
"	"	"	"	**0838**		**$ 144.76**	**ON 12/12/98**

BELLSOUTH

BellSouth Telecommunications, Inc.
150 South Monroe Street
Tallahassee, Florida 32301

850 224-5244
Fax 850 222-8640
Internet
Maryrose.Sirianni@bridge.bellsouth.com

Maryrose Sirianni
Manager
Regulatory Relations

April 26, 1999

Ms. Sue Ollila
Florida Public Service Commission
2540 Shumard Oak boulevard
Tallahassee, FL 32399-0850

RE: ABA Professional Association Inc.

Dear Sue,

The information contained herin is considered customer proprietary information by BellSouth and should be kept confidential until such time as the customer permits release of the information.

Please see the attached for the payments of $500.00, $1283.89, and $144.76. The customer's records were checked for a payment of $343.46 applied to 305-374-3131-555. We found that although this payment posted to the customer's account, the BOCRIS records aged off the computer because when a final bill is paid, BOCRIS will drop the account. We then checked the MOBI system. There was one bill issued for 305-374-3131-555, a September 14, 1998 bill. The September bill was for $343.46, but since there was only one bill and then the customer code changed, there was no subsequent bill to see the payment applied. We have to surmise that the bill was paid in full and subsequently dropped out of the system. Since the bill aged off BOCRIS records, we could determine that the bill was paid.

We then checked account number 305-374-6404-618 and the same situation applied. A payment of $63.87 was received and posted to the account. The MOBI system showed a bill for the September 14, 1998 billing cycle. The bill was for $63.87, but no subsequent bill was issued with the same customer code. Again, the BOCRIS records aged off since the bill was paid.

Further, there was a question as to where a payment is applied on an account. If there are both regulated and unregulated balances on the bill, and if only a partial payment is received, BellSouth Small Business Collections advised that the payment would apply to the regulated portion first. If the full payment is received, the payment would apply to both the regulated and unregulated portions of the bill.

If you have any further qustions, please do not hesitate to call.

Sincerely,

Maryrose Sirianni

Manager-Regulatory Relations

RECEIVED
APR 26 1999
CMU

MESSAGE
Subject: ABA Professional Assoc.
Sender: Patricia A. Godsil /m2,mail2a

Dated: 4/26/99 at 11:45
Contents: 2

Item 1

TO: Maryrose Sirianni /m4,mail4a

Item 2

Maryrose,

This is to confirm our conversation concerning ABA's one remaining ISDN account. Per Elena Powanda, Complex Marketing, the customer's one remaining ISDN account, 305-374-0497-361, has a balance at this time of $1889.47. Ms. Powanda advised that she adjusted all the monthly charges for ISDN service on this account (which was disconnected on 12-31-98), and that the balance represents long distance charges that the customer incurred. She said that when she spoke with the customer and advised that she was adjusting the ISDN monthly charges, this would leave a balance consisting of long distance charges that were not going to be adjusted. Ms. Powanda said the customer understood and agreed to pay these charges.

March 9, 1999

MEMORANDUM:

TO: ABA Professional Association

FROM: M. Penelas, Collection Manager

Recently, we sent you a complete breakdown of all your accounts.

We have reviewed the copies of receipts you forwarded to us and have verified that payments were applied as follows:

343.46 → IFB
374-3131-555 $500.00 posted 12-1-98 on 305-374-0838-360 ISDN
$1283.89 posted 12-8-98 on 305-374-0838-360
$144.76 posted on 12-12-98 on 305-374-0838-359
374-6404-618

All accounts under ABA Professional Association must be brought up-to-date in order to avoid interruption of your service. All accounts under other corporation names, if not brought up-to-date, will have an impact on your credit because they are being handled by an outside collection agency.

63.87 RCF

Remote Call For.

We urge you to call our office and make payment arrangements on all existing and final accounts within the next five days.

If you have any further questions, you can reach us at (305) 780-2198 between the hours of 8:00am. to 5:00p.m.

Mp/jl

MESSAGE
Subject: 237627R ABA
Creator: Patricia A. Godsil /m2,mail2a

Dated: 3/24/99 at 8:09
Contents: 2

Item 1

TO: NANCY CORTIJO-SIMMONDS /INTERNET (NCORTIJO@PSC.STATE.FL.US)

Item 2

3-24-99

FROM: Pat Godsil
BellSouth

RE: ABA Professional Assoc.
305-374-0838

CASE NO. 237627R

This is in final response to our interim dated 3-5-99.

As indicated on the fax sent to you on 3-11-99, BellSouth investigated the payments the customer claimed had not been posted to his account and advised the customer that the payments were in fact posted to the customer's accounts, and the dates they posted.

Further, in that same letter to the customer dated March 9, 1999, the customer was advised that payments or arrangements needed to be made on his accounts to avoid an interruption of the service.

Nancy, to answer your question regarding the relation of ABA Travel and ABA Professional Association, 305-374-0838 was originally established as ABA Travel, then it was changed to ABA Professional Assoc.

Also, ABA PA International for telephone number 305-672-3011 is another active corporation in the group. The officer of the company is Tamara Lora, Manuel Lora's wife.

Nancy, BellSouth has gone above and beyond to assist this customer. The customer is not even paying his current charges that are not in dispute on his account, 305-374-3131.

Please advise BellSouth of your determination on this case as soon as possible so that we may proceed with collection procedures.

March 2, 1998

MEMORANDUM TO: ABA Professional Association
Attn: Mr. Manuel Lora

FROM: Mrs. Penelas
Manager

Attached please find the breakdown of each account which details all payments applied towards each account and outstanding balance still owed for each account. The list of all accounts are:

Acct#	Class of Service	Date of Installation / Date of Disconnect	Amount Due
305-867-1314-541 ABA Professional Assoc. 5225 Collins Ave Apt. 1117 Miami Beach	1FB	6-4-98 - 8-7-98	598.97
? 305-374-0838-359 ABA Professional Assoc. 801 Brickell Bay Dr. Suite 662 Miami	1FB	9-1-98 - 9-4-98 payment $ 144.76 12-12	-0-
150N 305-374-0838-360 ABA Professional Assoc.	S4B	9-4-98 - New Telephone# 305-374-0497	130.20 balance transferred to 305-374-0497-361
305-374-0838-559 ABA Professional Assoc	S4B	8-27-98 - 8-28-98	-0-
305-374-0838-923 ABA Travel Group Corp. 801 Brickell Bay Drive, Suite 662	1FB	10-9-89- 8-27-98	283.14

Acct#	Class of Service	Date of Installation / Date of Disconnect	Amount Due
305-374-6404-411 A A International 45 N.W. 5th St Miami	RCF	4-16-92 - 3-2-98	23.91
63.87 pd 305-374-6404-618 ABA Professional Assoc. 45 N.W. 5th St.	RCF	OK = 4-21-98 - 8-21-98	-0-
305-374-6404-777 ABA Professional Assoc. 801 Brickell Bay Drive Suite 662 Miami	RCF	8-29-98 - 9-4-98	-0- error per 6/1 BST letter should be 35.09
305-374-2075-606 ABA Professional Assoc. 801 Brickell Bay Drive Suite 662 Miami	1FB	5-23-98 - 6-6-98	166.38 BST 6/1 letter, Acct dropped out of system
305-374-0497-618 ABA Professional Assoc. 801 Brickell Bay Drive Suite 662 Miami	1FB	1-15-85 - 8-28-98	1,181.72 Balance transferred from telephone 305-374-3131-617 $1,206.13
? 305-374-0497-361 ABA Professional Assoc. 801 Brickell Bay Drive Suite 662 Miami	S4B	9-4-98 - 12-31-98	1,929.16 Balance transferred from old telephone 305-374-0838-360 $1,875.48 as of $ 1889.47 toll
305-374-3131-710 ABA Professional Assoc 801 Brickell Bay Drive Suite 662	1FB	12-18-98 - Present Working Service	

Acct#	Class of Service	Date of Installation Date of Disconnect	Amount Due
343.46 payment ? 305-374-3131-555 ABA Professional Assoc 801 Brickell Bay Drive Suite 662 Miami	1FB	8-29-98 - 9-4-98	-0-
305-374-6404-044 ABA Professional Assoc 801 Brickell Bay Drive Suite 662 Miami	RCF	12-18-98 - 12-31-98	-0-
305-672-3011-337 ABA PA International Inc. 930 Washington Ave Miami Beach	1FB	10-25-96 - Present	6/1 BST now "Peace of Mind Investigating" same officers
305-Y85-5587-703 ABA PA International Inc 930 Washington Ave Miami Beach	Misc Non-Pay		**$10,337.26** Directory Advertising balance
305-Y87-0912-912 ABA Professional Assoc. 801 Brickell Bay Drive Suite 662 Miami	Misc Non-Pay from 305-374-3131		**$15,097.17**

As mentioned, the enclosed ledgers display payments received and applied towards each account and adjustments that have been credited from BellSouth. No further adjustments is due and all outstanding balance is due.

LST BL —	LST BL 1050.81	LST BL 1633.31	LST BL	LST BL	LST BL
PAID	PAID 0	PAID	PAID	PAID	PAID
ADJ	ADJ	ADJ 86.00	ADJ	ADJ	ADJ
BAL —	BAL 1050.81	BAL	BAL	BAL	BAL
OC&C	OC&C	OC&C	OC&C	OC&C	OC&C
VSP 33.77	VSP 33.77				
ATT 107.14	ATT 42.54				
DA	DA	DA	DA	DA	DA
CCG 1050.81	CCG 582.50	CCG	CCG	CCG	CCG
TOT 1050.81	TOT 1633.31	TOT	TOT	TOT	TOT
DA CLM	DA CLM	DA CLM	DA CLM	DA CLM	DA CLM
+LPC(DA)	+LPC(DA)	+LPC(DA)	+LPC(DA)	+LPC(DA)	+LPC(DA)
TOT CLM	TOT CLM	TOT CLM	TOT CLM	TOT CLM	TOT CLM
LS DUE 1050.81	LS DUE 1633.31	LS DUE	LS DUE	LS DUE	LS DUE
1-99	2-99				

BL DTE	BL DTE	BL DTE	BL DTE	BL DTE	BL DTE
LST BL	LST BL	LST BL	LST BL	LST BL	LST BL
PAID	PAID	PAID	PAID	PAID	PAID
ADJ	ADJ	ADJ	ADJ	ADJ	ADJ
BAL	BAL	BAL	BAL	BAL	BAL
OC&C	OC&C	OC&C	OC&C	OC&C	OC&C
DA	DA	DA	DA	DA	DA
CCG	CCG	CCG	CCG	CCG	CCG
TOT	TOT	TOT	TOT	TOT	TOT
DA CLM	DA CLM	DA CLM	DA CLM	DA CLM	DA CLM
+LPC(DA)	+LPC(DA)	+LPC(DA)	+LPC(DA)	+LPC(DA)	+LPC(DA)
TOT CLM	TOT CLM	TOT CLM	TOT CLM	TOT CLM	TOT CLM
LS DUE	LS DUE	LS DUE	LS DUE	LS DUE	LS DUE

BELLSOUTH

BellSouth Telecommunications, Inc.
400
150 South Monroe Street
Tallahassee, Florida 32301

850 222-1201
Fax 850 222-8640

Nancy H. Sims
Director – Regulatory Relations

June 1, 1999

Ms. Sue Ollila
Florida Public Service Commission
2450 Shumard Oakes Boulevard
Tallahassee, Florida

Dear Ms. Ollila:

The information contained herein is considered customer proprietary information by BellSouth and should be kept confidential until such time as the customer permits release of the information.

In reference to your April 26 inquiry regarding ISDN monthly charges, attached is a breakdown of accounts by customer code and amounts due.

The following is a brief description on the different customer codes:

On 08-27-98 -	3 orders were issued to provide ISDN service Account Number 374-0838-559
On 08-28-98 -	Disconnect issued on 374-0838-559
On 08-28-98 -	Order issued to re-establish 1FB service Account number 374-0838-359
On 09-04-98 -	3 orders issued to provide ISDN service Account number 374-0838-360
On 12-18-98 -	Customer requested 2 ISDN circuits disconnected and Converted back to 1FB service. ISDN account number became: 374-0497-361 1FB account number 374-3131-710
On 12-31-98 -	Disconnect issued on ISDN remaining Account number 374-0497-361

When the disconnects were issued on 12-18 and 12-31 the customer was given duplicate credit for service. Manual credit had been processed in December. Please see the attached list.

Below are responses to your additional questions as a result of our May 19, 1999 response, including page 1 of the bill.

1 - The letter that was sent to the customer dated 3-2-98 contained a typo on the amount due for account number 305-374-6404-777. The balance has always been $35.09 and is the amount that was requested when the bill was sent to him.

2 - 305-Y85-5587 Advertising balance: This involved three accounts:

Misc. Acct. Number (305) Y85 5587
GAP Tel. Number (305) 374 6404
Acct. Tel Number (305) 672 3011

A review of the above Misc. Account Number indicates the charges of $5,710.41 are due to nonpayment of directory advertising charges for BellSouth Advertising & Publishing Corporation's (BAPCO). The Guaranteed Advertising Program (GAP) for ABA PA Int'l Inc. appeared in the 1998-99 Greater Miami Yellow Pages on GAP telephone number (305) 674 6404. The associated advertising charges were billed to ABA PA Int'l Inc. business account telephone number (305) 672 3011.

BAPCO moved the outstanding directory advertising balance from ABA PA Int'l Inc. once it determined the account's non pay status. BAPCO's procedures are to bill the entire issue of directory advertising to a Misc. account number.

On the May 11, 1999 bill, a credit was issued in the amount of $4,005.85 for a decrease in Directory Advertising from 3-27-99 through 10-24-99 for the Greater Miami Yellow Pages billing at ($575.00 per month) due to a disconnect order issued on Gap Account Telephone Number (305) 374 6404. Also note that after further review it appears that this credit was issued in error, and is probably due to a system glitch. This has been reported to the BAPCO Collections Department who will issue the appropriate orders to pick up the directory advertising charges.

3 - 305-374-2075-606 was not included in the 5-19 letter because the account dropped out of the system. We cannot at this time determine why it dropped out of the system. The following may have occurred - the bill could have been paid by the customer - an adjustment could have been issued - or the account could have been disconnected and the balance transferred to another account.

4 - 305-672-3011-337 was not included in the 5-19 letter because the customer changed the billing name on the account to "Peace of Mind Investigating" (no longer ABA - although the corporate officers are the same) and is making regular payments on the account.

If you have any further questions, please do not hesitate to call.

Yours very truly,

Mary Rose Sciarini for NS

Director - Regulatory Relations

** BELLSOUTH **

ABA PROFSNL ASSOC
Account Number: 305 374-0497 361 0642
Bill Period Date: Jan 14, 1999
Detailed Statement of Charges

	Amount	
Taxes (continued)		
Taxes on Regulated Services (continued)		
26. State/Local Tax	15.73CREDIT	
27. Florida Gross Receipts Surcharge	2.25CREDIT	
28. City Tax	13.94CREDIT	
29. Franchise Charge	5.78CREDIT	
Total Taxes on Regulated Services	44.01CREDIT	
Taxes on Unregulated Services		
38. State/Local Tax	.45CREDIT**	
Total Taxes on Unregulated Services	.45CREDIT	
Total Taxes		46.46CREDIT
Total BellSouth Current Charges	224.96CREDIT	

Messages

This bill represents charges for your former telephone service. If you cannot make payment in full, please call 1 800 858-9413 before Feb 1 and we will try to establish a payment arrangement which meets your individual needs. Calling cards for this account are now void and should be destroyed.

Detail of Adjustments

Listed below is a summary of the Adjustments, found on page 1 of the bill.
These adjustments are shown by date and the company making the adjustment.

	Date Adjusted	Company			
31.	Dec 17, 1998	BELLSOUTH TELECOMMUNICATIONS		62.48CREDIT	Nov Monthly SVC
32.	Dec 17, 1998	BELLSOUTH TELECOMMUNICATIONS		276.64CREDIT	
33.	Dec 17, 1998	BELLSOUTH TELECOMMUNICATIONS		23.11CREDIT	
34.	Dec 17, 1998	BELLSOUTH TELECOMMUNICATIONS	Oct Partial	-591.93CREDIT	
35.	Dec 17, 1998	BELLSOUTH TELECOMMUNICATIONS		40.52CREDIT	Late Payment charge (LPC)
36.	Dec 28, 1998	BELLSOUTH TELECOMMUNICATIONS		39.93	
37.	Dec 28, 1998	BELLSOUTH TELECOMMUNICATIONS		3,209.96	
38.	Dec 29, 1998	BELLSOUTH TELECOMMUNICATIONS		144.76CREDIT	
39.	Jan 11, 1999	BELLSOUTH TELECOMMUNICATIONS	Oct Monthy	62.48CREDIT	
40.	Jan 11, 1999	BELLSOUTH TELECOMMUNICATIONS		276.64CREDIT	
41.	Jan 11, 1999	BELLSOUTH TELECOMMUNICATIONS		23.11CREDIT	
42.	Jan 11, 1999	BELLSOUTH TELECOMMUNICATIONS	Oct Partial	-457.33CREDIT	
43.	Jan 11, 1999	BELLSOUTH TELECOMMUNICATIONS		7.91CREDIT	LPC
44.	Jan 12, 1999	BELLSOUTH TELECOMMUNICATIONS		62.48CREDIT	Dec Monthy SVC
45.	Jan 12, 1999	BELLSOUTH TELECOMMUNICATIONS		276.64CREDIT	
46.	Jan 12, 1999	BELLSOUTH TELECOMMUNICATIONS		23.11CREDIT	
Total Adjustments			920.73		

BILL DATE	ACCOUNT NUMBER	CSR CODE	TOLLS	BELLSOUTH CHARGES
10/14/98	305 374 0838	360	$ 1,186.43	$ 1515.02
11/14/98	305 374-0838	360	1,318.88	479.51
12/14/98	305 374-0838	360	838.00	650.68
01/14/99	305 374-0838	360	127.63	2.57
09/14/98	305 374-0838	559		254.12
10/14/98	305 374-0838	559		196.59
01/14/99	305 374-0838	559		53.23CR
01/14/99	305 374-0497	361	173.47	51.49CR
09/14/98	305 374-0497	618	59.80	24.88CR
10/14/99	305 374-0497	618		
01/14/99	305 374-0497	618		.05CR
As info:				
11/14/98	305 374-0838 IFB	923		690.99
8/14/98	305 374-3131 IFB	617		$1,206.13
THESE CHARGES WERE DUE PRIOR TO THE ISDN CONVERSION → $1897.12				

ABA PROFSNL ASSOC
Account Number: 305 374-0497 361 0442
Bill Period Date: Jan 14, 1999

SummaryofCharges

	Amount
Previous Charges	
Amount of Last Bill	994.68
Less Payments	.00
Adjustments	920.73
Balance	1,915.41
Current Charges	
BellSouth	
Local Usage	7.42
Other Charges and Credits	187.92CRED
Taxes	44.46CRED
Total Current Charges for BellSouth Companies	224.96CRED
Charges for Other Companies	173.47
Total Current Charges Due Before Feb 1	51.49CRED
Total Amount Due (See Messages for Charges Under Investigation)	1,863.92

ImportantNotice(s)

Please note: This is your final bill. See message following the BellSouth

HelpfulNumbers

BellSouth Telecommunications, Inc. (BST)
NOTE: Numbers for other companies are listed on their bill pag

Billing Questions or to Place an Order:
If calling from within the Florida BellSouth service area 1 800 85
If calling from outside Florida or outside the
Florida BellSouth service area 1 800 85

Repair:
If calling from within the Florida BellSouth service area 78

Please make check payable to BellSouth in U.S. funds.

CURRENT CHARGES DUE BEFORE	PAST DUE AMOUNT	TOTAL AMOUNT DUE	AMOUNT PAID
Feb 1	$1,915.41	$1,863.92	

305 374-0497
Jan 14, 1999

0215 FXX B01
331312937620

X

P.O. BOX 70807
CHARLOTTE NC
28272-0807

ABA PROFSNL ASSOC
801 BRICKELL BAY D
SUIT 662
MIA FL 331

BELLSOUTH

BellSouth Telecommunications, Inc.
150 South Monroe Street
Tallahassee, Florida 32301

850 224-5244
Fax 850 222-8640
Internet
Maryrose.Sirianni@bridge.bellsouth.com

Maryrose Sirianni
Manager
Regulatory Relations

June 14, 1998

Mr. Sue Ollila
Florida Public Service Commission
2540 Shumard Oak Boulevard
Tallahassee, Fl 32399-0850

RE: ABA Professional Association, Inc.

Dear Sue,

The information contained herin is considered customer proprietary information by BellSouth and should be kept confidential until such time as the customer permits release of the information.

The following is in response to your inquiry regarding ABA Professional's ISDN service during the time period August 1998 through October 1998. ISDN service was initiated for ABA in late August 1998. However, since ABA was not pleased with the ISDN service it was discontinued shortly thereafter in early October 1998. There were no credits issued for ABA's ISDN service for this time period because ABA was never billed for the service during this time period.

If you have any further questions, please do not hesitate to call.

Sincerely,

Maryrose Sirianni

Manager-Regulatory Relations

** BELLSOUTH **

ABA PROPERL ASSOC
Account Number: 305 374-0497 361 0482
Bill Period Date: Jan 14, 1999
Detailed Statement of Charges

Other Charges and Credits (continued) — Amount

Work Completed On Dec 18, 1998 (continued)
PON: HARNY LORA SO: CQPTK136 (continued)
374-0838 (continued)
Partial month's credit for service removed (12/19/98 - 01/13/99)
13. MemoryCall Answering Service, Personal/Extension Mailbox ($7.95/mo) 6.89CREDIT**
14. Message Waiting - Stutter Dialtone ($0.75/mo) ..... .65CREDIT
PON: HARNY LORA SO: CQYCD814
374-0838
Circuit Number: 70.XBRD.512988..SD
Partial month's credit for service removed (12/19/98 - 01/13/99)
15. 2 ISDN B Channel Threshold Voice/Data ($32.50/mo) 28.17CREDIT
16. ISDN Threshold Pricing, Basic Rate DSL Access Arrangement, Business ($55.00/mo) 47.67CREDIT
17. FCC Charge for Excess Line Port for Basic Rate ISDN Digital Subscriber Line ($2.44/mo) 2.11CREDIT
Credit (12/19/98 - 01/13/99)
18. FCC Charge for Network Access ($5.08/mo) 4.33CREDIT
Work Completed On Dec 31, 1998
PON: CONNTS-SD SO: DQ7YCJQ0
374-0497
Circuit Number: 70.XBRD.512987..SD
19. Credit for service disconnected (01/01/99 - 01/13/99) ($89.94/mo) 38.97CREDIT
Credit (01/01/99 - 01/13/99)
20. FCC Charge for Network Access ($5.08/mo) 2.17CREDIT
21. Credit due to decrease in rates (01/01/99 - 01/13/99) ($1.07/mo) ..... .46CREDIT
SO: RATE CHANGE
374-0497
22. Charge due to increase in rates for Interstate Toll Access, reflecting changes in the rules of the FCC (01/01/99 - 01/13/99) ..... .46
Work Completed On Jan 1, 1999
SO: ZQMF75517D
374-0497
23. Refund due to decrease in Telecommunications Access System Act Surcharge ..... .03CREDIT**
Directory Assistance (DA) Usage
24. 2 Call(s) to 555-1212 at $0.48 Each ..... .96

** BELLSOUTH **

ABA PROFSNL ASSOC
Account Number: 305 374-0497 361 0442
Bill Period Date: Jan 14, 1999
Detailed Statement of Charges

Taxes (continued)

	Amount	
Taxes on Regulated Services (continued)		
26. State/Local Tax	15.73CREDIT	
27. Florida Gross Receipts Surcharge	2.25CREDIT	
28. City Tax	13.94CREDIT	
29. Franchise Charge	5.70CREDIT	
Total Taxes on Regulated Services	44.81CREDIT	
Taxes on Unregulated Services		
30. State/Local Tax	.45CREDIT**	
Total Taxes on Unregulated Services	.45CREDIT	
Total Taxes		44.46CREDIT
Total BellSouth Current Charges	224.96CREDIT	

Messages

This bill represents charges for your former telephone service. If you cannot make payment in full, please call 1 800 858-9413 before Feb 1 and we will try to establish a payment arrangement which meets your individual needs. Calling cards for this account are now void and should be destroyed.

Detail of Adjustments

Listed below is a summary of the Adjustments, found on page 1 of the bill. These adjustments are shown by date and the company making the adjustment.

	Date Adjusted	Company		
31.	Dec 17, 1998	BELLSOUTH TELECOMMUNICATIONS	62.48CREDIT	
32.	Dec 17, 1998	BELLSOUTH TELECOMMUNICATIONS	276.64CREDIT	
33.	Dec 17, 1998	BELLSOUTH TELECOMMUNICATIONS	23.11CREDIT	
34.	Dec 17, 1998	BELLSOUTH TELECOMMUNICATIONS	591.93CREDIT	
35.	Dec 17, 1998	BELLSOUTH TELECOMMUNICATIONS	40.52CREDIT	
36.	Dec 28, 1998	BELLSOUTH TELECOMMUNICATIONS	39.93 →	doesn't add up to 34.93
37.	Dec 28, 1998	BELLSOUTH TELECOMMUNICATIONS	3,209.94 →	where did this come from?
38.	Dec 29, 1998	BELLSOUTH TELECOMMUNICATIONS	144.76CREDIT	
39.	Jan 11, 1999	BELLSOUTH TELECOMMUNICATIONS	62.48CREDIT	
40.	Jan 11, 1999	BELLSOUTH TELECOMMUNICATIONS	276.64CREDIT	
41.	Jan 11, 1999	BELLSOUTH TELECOMMUNICATIONS	23.11CREDIT	
42.	Jan 11, 1999	BELLSOUTH TELECOMMUNICATIONS	457.33CREDIT	
43.	Jan 11, 1999	BELLSOUTH TELECOMMUNICATIONS	7.91CREDIT	
44.	Jan 12, 1999	BELLSOUTH TELECOMMUNICATIONS	62.48CREDIT	
45.	Jan 12, 1999	BELLSOUTH TELECOMMUNICATIONS	276.64CREDIT	
46.	Jan 12, 1999	BELLSOUTH TELECOMMUNICATIONS	23.11CREDIT	
Total Adjustments			920.73	

Total Adjusted

ok $ 2329.14

** AT&T **

AMA PROPERL ASSOC
Account Number: 305 374-0497 361 0442
Bill Period Date: Jan 14, 1999
For AT&T Billing Questions, Call 1 800 325-0138
Detailed Statement of Charges

Itemized Calls
305 374-0497

Direct Dialed Calls

	Date	Place Called	Number Called	Rate*	Time	Min.	Amount	IMSBLC	X	TICKET	ID	GEO CODE
1.	12/10	LUMBERTON NC	910 739-0140	ED	09:56AM	2	.73	& JL20	0	JK	6	
2.	12/10	CAYMAN IS CQ	345 945-6415	ER	09:32PM	5	9.10	& LL20	0	JK	4	
3.	12/10	CAYMAN IS CQ	345 945-6415	BY	10:05PM	4	7.28	& LL20	0	JK	5	
4.	12/10	CAYMAN IS CQ	345 945-6425	BY	10:09PM	4	7.28	& LL20	0	JK	9	
5.	12/15	ATLANTA GA	404 876-6415	ED	02:50PM	2	.73	& JL20	0	JK	0	
6.	12/15	NEWORLEANS LA	504 734-1039	ED	02:54PM	2	.73	& JL20	0	JK	8	
7.	12/15	GREENVILLE SC	864 675-0947	ED	02:56PM	2	.73	& JL20	0	JK	2	
8.	12/15	JACKSONVL FL	904 296-0709	ED	03:50PM	1	.18	& SL20	0	JK	8	
9.	12/17	NEW YORK NY	212 385-0349	ED	11:27AM	3	1.10	& JL20	0	JK	7	
10.	12/17	BINGHAMTON NY	607 724-8481	ED	12:02PM	1	.37	& JL20	0	JK	9	

Total Direct Dialed Calls 28.23
Total Charges for 305 374-0497 ..... 28.23
The above total does not include the following taxes:
Federal Tax $0.87
State/Local Tax $2.09
Florida Gross Receipts Surcharge $0.71

305 374-7246

Direct Dialed Calls

	Date	Place Called	Number Called	Rate*	Time	Min.	Amount	IMSBLC	X	TICKET	ID	GEO CODE
11.	12/08	HOUSTON TX	713 862-4324	ED	04:08PM	2	.73	& JL20	0	JK	8	
12.	12/08	HOUSTON TX	713 862-4374	ER	07:46PM	26	9.46	& JL20	0	JK	9	
13.	12/08	CAYMAN IS CQ	345 945-6414	ER	08:22PM	1	1.82	& LL20	0	JK	1	
14.	12/08	GEORGETOWN CQ	345 916-0730	ER	08:23PM	1	1.82	& LL20	0	JK	4	
15.	12/10	NEW YORK NY	212 594-3322	ED	02:17PM	2	.73	& JL20	0	JK	4	
16.	12/10	COCOA FL	407 632-1111	ED	02:56PM	1	.18	& SL20	0	JK	1	
17.	12/10	COCOA FL	407 632-1111	ED	02:57PM	2	.33	& SL20	0	JK	0	
18.	12/10	ST PETERSBG FL	727 321-1800	ED	02:59PM	1	.18	& SL20	0	JK	4	
19.	12/10	ST PETERSBG FL	727 321-1800	ED	03:08PM	1	.18	& SL20	0	JK	7	
20.	12/10	DAYTONABCH FL	904 255-8131	ED	03:01PM	2	.33	& SL20	0	JK	0	
21.	12/10	MONTVERDE FL	407 567-9887	ED	03:02PM	1	.18	& SL20	0	JK	4	
22.	12/10	NAV GALLIE FL	407 242-7555	ED	03:03PM	3	.49	& SL20	0	JK	6	
23.	12/10	PENSACOLA FL	850 595-8480	ED	03:11PM	1	.18	& SL20	0	JK	8	
24.	12/10	SARASOTA FL	941 924-1365	ED	03:12PM	2	.33	& SL20	0	JK	3	
25.	12/10	CLEARWATER FL	727 539-0608	ED	03:14PM	2	.33	& SL20	0	JK	5	
26.	12/10	JACKSONBCH FL	904 246-7466	ED	03:20PM	3	.50	& SL20	0	JK	5	
27.	12/10	PANAMACITY FL	850 747-5500	ED	03:23PM	2	.34	& SL20	0	JK	7	
28.	12/10	BOISE ID	208 323-2554	ER	07:13PM	15	5.46	& JL20	0	JK	9	
29.	12/11	MASSAD BA	242 323-8448	ER	12:11PM	1	1.35	& LL20	0	JK	2	

** AT&T **

AMA PROFENL ASSOC
Account Number: 305 374-0497 361 0442
Bill Period Date: Jan 14, 1999
For AT&T Billing Questions, Call 1 800 325-0138
Detailed Statement of Charges

Itemized Calls (continued)
305 374-7246 (continued)
Direct Dialed Calls (continued)

	Date	Place Called		Number Called	Rate*	Time	Min.	Amount	IMSBLC	X	TICKET	ID	GEO CODE
35.	12/14	NASSAU	BA	242 323-8468	HR	01:14PM	7	9.45	& LL20	0	JK	7	
36.	12/14	RALEIGH	NC	919 872-5800	HD	02:57PM	4	1.46	& JL20	0	JK	5	
37.	12/14	DAYTONABEACH	FL	904 255-8131	HD	04:51PM	4	.64	& SL20	0	JK	3	
38.	12/14	BAD GALLIN	FL	407 242-7555	HD	04:54PM	4	.64	& SL20	0	JK	9	
39.	12/14	PENSACOLA	FL	850 595-8480	HD	04:58PM	2	.34	& SL20	0	JK	3	
40.	12/14	SARASOTA	FL	941 924-1365	HD	05:00PM	5	.59	& SL20	0	JK	6	
41.	12/14	CLEARWATER	FL	727 535-0608	HD	05:05PM	3	.36	& SL20	0	JK	4	
42.	12/14	JACKSONVILLE	FL	904 246-7466	HD	05:13PM	3	.37	& SL20	0	JK	1	
43.	12/14	PANAMACITY	FL	850 747-5500	HD	05:16PM	5	.60	& SL20	0	JK	1	
44.	12/14	PANAMACITY	FL	850 747-5500	HD	05:21PM	2	.25	& SL20	0	JK	5	
45.	12/14	DIR ASSIST	FL	813 555-1212	HD	06:46PM	1	1.10	& SL20	0	JK	3	
46.	12/14	TAMPA	FL	813 231-1000	HD	06:49PM	3	.36	& SL20	0	JK	6	
47.	12/14	ST PETERSBRG	FL	727 367-6461	HR	07:36PM	1	.13	& SL20	0	JK	7	
48.	12/14	ST PETERSBRG	FL	727 367-6461	HR	07:41PM	2	.25	& SL20	0	JK	7	
49.	12/14	ST PETERSBRG	FL	727 367-6461	HR	07:54PM	1	.13	& SL20	0	JK	4	
50.	12/14	ST PETERSBRG	FL	727 367-6461	HR	08:38PM	1	.13	& SL20	0	JK	7	
51.	12/14	ST PETERSBRG	FL	727 367-6461	HR	08:55PM	1	.13	& SL20	0	JK	4	
52.	12/14	ST PETERSBRG	FL	727 367-6461	HR	09:16PM	3	.36	& SL20	0	JK	7	
53.	12/15	DIR ASSIST	GA	912 555-1212	HD	09:09AM	1	1.40	& JL20	0	JK	7	
54.	12/15	NEWORLEANS	LA	504 736-1000	HD	09:15AM	1	.37	& JL20	0	JK	8	
55.	12/15	BIRMINGHAM	AL	205 879-8709	HD	10:07AM	1	.37	& JL20	0	JK	4	
56.	12/15	GREENVILLE	SC	864 234-5744	HD	10:07AM	1	.37	& JL20	0	JK	4	
57.	12/15	BIRMINGHAM	AL	205 879-8709	HD	02:42PM	1	.37	& JL20	0	JK	1	
58.	12/15	DIR ASSIST	AL	205 555-1212	HD	02:43PM	1	1.40	& JL20	0	JK	7	
59.	12/16	NEW YORK	NY	212 267-2727	HD	03:28PM	2	.73	& JL20	0	JK	3	
60.	12/16	BINGHAMTON	NY	607 723-5820	HD	03:42PM	1	.37	& JL20	0	JK	5	
61.	12/16	APALACHIN	NY	607 625-3649	HD	03:42PM	1	.37	& JL20	0	JK	6	
62.	12/16	NEWPROVIDNC	BA	242 356-7411	HR	03:47PM	2	2.70	& LL20	0	JK	9	
63.	12/16	NEWPROVIDNC	BA	242 377-2056	HR	03:50PM	2	2.70	& LL20	0	JK	7	
64.	12/17	NEW YORK	NY	212 267-2727	HD	10:00AM	8	2.91	& JL20	0	JK	8	
65.	12/17	SARASOTA	FL	941 924-1365	HD	11:10AM	4	.64	& SL20	0	JK	7	
66.	12/17	VENICE	FL	941 484-7225	HD	11:13AM	1	.18	& SL20	0	JK	9	
67.	12/17	ST PETERSBRG	FL	727 820-0059	HD	11:15AM	2	.33	& SL20	0	JK	3	
68.	12/17	JACKSONVILLE	FL	904 246-7466	HD	11:25AM	2	.34	& SL20	0	JK	4	
69.	12/17	KISSIMMEE	FL	407 847-6366	HD	11:29AM	1	.18	& SL20	0	JK	6	
70.	12/17	NASSAU	BA	242 328-3505	HR	12:25PM	2	2.70	& LL20	0	JK	2	
71.	12/17	NEWPROVIDNC	BA	242 356-9397	HR	12:31PM	4	5.40	& LL20	0	JK	5	
72.	12/17	NASSAU	BA	242 323-8127	HR	03:05PM	7	9.45	& LL20	0	JK	4	

** AT&T **

ABA PROPERL ASSOC
Account Number: 305 374-0497 361 0442
Bill Period Date: Jun 14, 1999
For AT&T Billing Questions, Call 1 800 325-0138
Detailed Statement of Charges

Itemized Calls (continued)
305 374-7246 (continued)
Direct Dialed Calls (continued)

	Date	Place Called	Number Called	Rate*	Time	Min.	Amount	INSBLC	E	TICKET ID	GEO CODE
78.	12/17	STATEN IS NY	917 918-0045	ND	06:14PM	1	.37	& JL20	0	JK 2	
79.	12/17	QUEENS NY	718 820-0385	ND	06:17PM	14	5.09	& JL20	0	JK 8	
80.	12/17	QUEENS NY	718 888-9198	ND	06:36PM	2	.73	& JL20	0	JK 4	

Total Direct Dialed Calls 124.40
Total Charges for 305 374-7246 ..... 124.40
The above total does not include the following taxes:
Federal Tax $3.83
State/Local Tax $10.17
Florida Gross Receipts Surcharge $3.17
Total Itemized Calls 152.63
Taxes
Taxes on Regulated Services — Amount
81. Federal Tax 4.78
82. State Tax 11.36
83. Florida Gross Receipts Surcharge 3.88
84. City Tax ..... .90
Total Taxes on Regulated Services 20.84
Total Taxes 20.84
Total AT&T Current Charges 173.47
* Taxes and Rates Applied - See Back of First Page

This portion of your bill is provided as a service to AT&T. There is no connection between BellSouth and AT&T. You may choose another company for your long distance telephone calls while still receiving your local telephone service from BellSouth.

Equipment Bill

[Inquire]

Company: [redacted]
Customer: 112615
Display Date: Due Date
Currency Display: Base
LFee:

BELLSOUTH COMMUNICATION SYSTEM USD
ABA PROFESSIONAL ASSOC
Balance: 0
0 Position To:

SC	Transaction	Due Date	Base Amount	Base Open Amount	TC	U

Equipment Bill

[redacted]

Company: [redacted] BELLSOUTH COMMUNICATION SYSTEM USD
Customer: [redacted] [redacted] Nat
Transaction: [redacted]
Display Date: Tran Date
Currency Display: Base
Current Balance:

Position To. [redacted]

~~OB~~	~~Transaction~~	~~Tran Date~~	Amount	Applied Amount	Open Amount	TC
I	1284752	09/16/98	5489.00			
C	284752P1	01/27/99		5489.00-		

I - invoice
C - credit

[redacted]

BELLSOUTH

BellSouth Business Systems, Inc.
Suite 1249
8451 N. Federal Highway
Fort Lauderdale, Florida 33308-1493

February 8, 1999

ABA Professional Assoc.
% Manuel Lora
801 Brickell Bay Dr.
Miami, Fl. 33131

RE: 305 374-0497

Dear Mr. Lora:

I have reviewed your telephone bill for the above number and processed an additional credit of $119.69 (does not include taxes) which will be reflected on the February 14th, billing cycle.

The installation credit and monthly service for this circuit was processed with the credits issued in December, 1998 which totaled $1989.36 plus taxes.

The remaining balance on you account is for long distance usage and the appropriate taxes.

If you have any questions regarding this matter please call me at 954 958-6222.

Sincerely,

Elena Powanda
Project Manager

Page: 1 Document Name: untitled

305 374 3131 710 *PADJ* APR 14 1999 *LIVE* PS E MMID 1FBCL
MRC UP
ABA PROFSNL ASSOC PB 506 STA 392 TAX NNNN CC C MCC4
801 BRICKELL BAY DR RA 506 RTA 242 TAR 200800 TBE 9 0288 DOI 121898
SUIT 662 RB 513 NT P CT3 AVT 89 DEP -00
MIA FL 33131 PPD CCH AMT DUE 2713.28 OTN 305 374 041
CI PR TAMARA LORA VP MANUEL LORA OS 373-2075 867-131
-361 ***DO NT TDY DUE TO PSC CASE******
(BSUM) OWNR C BTNX *CIV
IC 3/0156 2/0089 P/0082 TRT 000000005050 RCK 000000000000 FE P 80

CARRIER	BO	BT#	BATCH	T	POST	PNDG CLM#	AMOUNT
SINCE 0415 BILL							
A00100	BST	888	042399	5	0426		10.72
A00100	BST	888	042399	5	0426		3.57
A00100	BST	888	042399	5	0426		10.72
A00100	BST	888	042399	5	0426		6.25
BEFORE 0314 BILL							
A00100	BST	889	022299	5	0223		86.00

Page: 1 Document Name: untitled

305 374 0497 361 *PADJ* JAN 14 1999 *FINAL* QS E MMID S4B
DUPL CUST EXIST (5)

ABA PROFSNL ASSOC
801 BRICKELL BAY DR
SUITE 662
MIA FL 33131

A1 203 STA TAX NNNN
A2 215 RTA TAR 200800 DOD 123198 CC C MCCO
OC 305 NT P CT1 AVT 714 DEP DOI 090498
PPD CCH AMT DUE 1889.47 WO 03
CI OBS 374-3131 P TAMARA LORA VP MANUEL LORA OTN 305 374 083 TRT MAN

ORA
(BSUM) OWNR C *CIV
IC 3/1279 2/1393 P/0884 TRT 00000000070H RCK 000000000000 FE P3WF80

CARRIER	BO	BT#	BATCH	T	POST	PNDG	CLM#	AMOUNT
SINCE 0116 BILL								
A00100	97	996	031799	T	0317			
A00100	97	994	031699	6	0318			1929.16
A00100	97	994	012799	6	0129			39.69
A00100	97	992	011899	6	0120			64.96
								130.20D
BEFORE 0114 BILL								
A00100	97	994	010999	6	0112			
A00100	97	994	010999	6	0112			23.11
A00100	97	994	010999	6	0112			276.64
A00100	97	994	010799	6	0111			62.48
A00100	97	994	010799	6	0111			7.91
								457.33

TO: LEROY
RASBERRY

FROM: DELLA
KIMBERL

STATE OF FLORIDA

Commissioners:
JOE GARCIA, CHAIRMAN
J. TERRY DEASON
SUSAN F. CLARK
JULIA L. JOHNSON
E. LEON JACOBS, JR.

DIVISION OF
TELECOMMUNICATIONS
WALTER D'HAESELEER
DIRECTOR
(850) 413-6600

Public Service Commission

June 18, 1999

Mr. Manuel Lora
ABA Professional Association Inc.
801 Brickell Bay Drive
Tower-4, Suite #662
Miami, Florida 33131

Re: Your complaints against BellSouth (CATS # 237627R, improper ISDN charges)

Dear Mr. Lora:

As we have discussed, Consumer Affairs, which handled your original complaint concerning the ISDN service you ordered from BellSouth, forwarded your most recent complaint to the Division of Telecommunications because of the complexity of the billing issues.

Consumer Affairs, in its April 9, 1999 letter to you, stated that BellSouth made a total adjustment of $8,022.90 to you, including $1,989.36 for installation charges, $5,489.11 for the equipment, and $544.43 for an additional line.

You questioned the installation credit of $1,989.36 because your initial installation of ISDN was supposed to be free, according to literature BellSouth sent you. The initial installation to change your service to ISDN was free. However, installation charges applied when you changed your service back to regular business from ISDN. Those installation charges, totaling $1,989.36, are the installation charges for which BellSouth gave you credit.

You were concerned that your December, 1998 payments to your accounts, totaling $2,335.98, were improperly credited by BellSouth, and believed you were due a refund. In December, 1998 you made five payments on your BellSouth accounts: $500.00 on December 4, $1,283.89, $343.46, and $63.87 on December 8, and $144.76 on December 12. The chart on page 2 shows the account, your payment, the status of the account, and the type of account.

December, 1998 Payments

Account Number	Amount Paid	Date Paid	Status of Account
305-374-0838-360	$500.00	12/4/98	Disconnected ISDN account, balance transferred to 305-374-0497-361
305-374-0838-360	$1,283.89	12/4/98	Disconnected ISDN account, balance transferred to 305-374-0497-361
305-374-3131-555	$343.46	12/8/98	Regular business line account, open from 8/29/98-9/4/98
305-374-6404-618	$63.87	12/8/98	Remote call forwarding account, open from 4/21/98-8/21/98
305-374-0838-359	$144.76	12/12/98	Regular business line account, open from 9/1/98-9/4/98

As you can see by the table, your December, 1998 payment amounts of $343.46, $63.87, and $144.76 were made to non-ISDN accounts which were closed in August and September, 1998. These payments were made to closed regular business accounts with outstanding balances. Your payments brought the account balances down to $0 for each of these accounts.

The remaining payments, totaling $1,783.89, appear on the disconnected ISDN account bill dated December 14, 1998. This account had a previous balance of $4,499.85, with a balance due of $4,204.62. The balance due amount of $4.204.62 includes the payments of $1,783.89. The account balance was transferred to account 305-374-0497-361 effective with the January 14, 1999 bill date. This account, as of May 19, 1999, had a balance of $1,889.47. The difference between $4,204.62 and $1,889.47 is $2,315.15 which includes credits applied to your ISDN account for monthly ISDN service charges and late payment charges. The remaining balance on your account consists of toll charges, which, according to BellSouth, you have agreed to pay. Therefore, you are not entitled to a further credit from BellSouth because of your December payments.

In summary, total adjustments of $10,338.05 were applied to your account for ISDN service.

Your other complaints included the following: during your initial ISDN installation, your service was interrupted yet you were not credited; BellSouth did not reimburse you for your cellular expenses while your service was interrupted; BellSouth placed an adapter on your ISDN lines to change service from ISDN to analog without your knowledge; and ABA did not receive a credit for modems you purchased from another (non-BellSouth) vendor.

In reference to your service interruption, BellSouth stated that it offered you the option of ISDN installation after business hours, but you declined because you did not want to pay overtime

charges. BellSouth also stated that your service was interrupted for approximately two to three hours, and that a BellSouth manager worked with you through the weekend adding other services, such as MemoryCall, remote access to call forwarding, call waiting, etc. According to Public Service Commission Rule 25-4.110(2), F.A.C., a service interruption must be in excess of 24 hours before a credit need be issued. In addition, Public Service Commission rules do not require a telephone carrier to pay for an alternate means of communication when telephone service is interrupted.

In regard to the placement of an adapter on your lines without your knowledge, BellSouth stated that during installation a BellSouth technician asked you which personal computers were going to access the ATA or adapter which lets standard personal computer modems talk to the phone system via analog. BellSouth's technician also advised you that since you were planning to purchase ISDN modems for your personal computers, your data technician needed to speak with a BellSouth technician. Thus, according to BellSouth, you were aware of the adaptor.

Finally, in regard to possible credit for your purchase of modems from a vendor other than BellSouth, BellSouth stated that the package price of the equipment you purchased from BellSouth included six digital modems to connect to your equipment. In addition, I asked you and your assistant, Gary Marcelin, several times for a copy of your digital modem invoice, however, you never provided one.

BellSouth has adjusted your account for equipment, ISDN monthly charges, installation back to regular business lines, and an additional line, for a total of $10,338.05. Based on the information and documentation provided, I believe that BellSouth is in compliance with the Public Service Commission's rules with regard to your accounts. Therefore, I am closing your entire complaint.

For your information, BellSouth provided me with a summary of your accounts, and the balance due on each account, as of May 19, 1999. In addition, BellSouth informed me that as of May 19, 1999, you had not made a payment on your current charges since December, 1998. The summary, contained in the chart on the next page, does not include the $5,710.41 owed on disconnected Directory Advertising account 305-Y85-5587-703 and it does not include the $15,097.17 owed on disconnected Directory Advertising account 305-Y87-0912-912.

Summary of ABA's Accounts with BellSouth

Account	Balance Owed	Status of Account	Type of Account
305-374-3131-710	$2,669.27	Open	Regular business line account, as of 5/19/99, no payment has been made since 12/18/99
305-374-0497-361	$1,889.47	Disconnected	ISDN (discussed above)
305-374-0497-618	$1,181.72	Disconnected	Regular business line account open from 6/4/98-8/7/98
305-867-1314-541	$598.97	Disconnected	Regular business line account open from 6/4/98-8/7/98
305-374-0838-923	$283.14	Disconnected	Regular business line account open from 10/9/89-8/27/98
305-374-6404-411	$23.91	Disconnected	Remote Call Forwarding account open from 4/16/92-3/2/98
305-374-6404-777	$35.09	Disconnected	Remote Call Forwarding account open from 8/29/98- 9/4/98

The total amount owed to BellSouth, as of May 19, 1999, on your telephone line accounts is $6,681.57, which consists of $2,669.27 for your open account and $4,012.30 for your disconnected accounts. BellSouth agreed that until this complaint is closed, it would not disconnect your service for non-payment. Since I am closing your complaint, I urge you to contact BellSouth as soon as possible in order to a prevent a service disruption.

If you have any questions, you may reach me at (850) 413-6540.

Sincerely,

Suzanne Ollila

Suzanne Ollila
Economic Analyst

cc: Beverlee S. DeMello, Consumer Affairs
MaryRose Sirianni, BellSouth Telecommunications

BELLSOUTH

BellSouth Telecommunications, Inc.
400
150 South Monroe Street
Tallahassee, Florida 32301

850 222-1201
Fax 850 222-8640

Nancy H. Sims
Director – Regulatory Relations

May 19, 1999

Ms. Sue Ollila
Florida Public Service Commission
2540 Shumard Oak Boulevard
Tallahassee, Florida 32399-0850

RE: ABA Professional Association Inc.

Dear Ms. Ollila,

The information contained herein is considered customer proprietary information by BellSouth and should be kept confidential until such time as the customer permits release of the information.

Question - Was the customer's service interrupted during the conversion from analog service to digital ISDN? If so, how long was the service interrupted, and was the customer credited for the service interruption? If ABA was credited, when was it credited, and for how much? If ABA was not credited, what is the amount that the customer should be credited, and when will ABA be credited?

We offered to connect the ISDN service after business hours so that the customer's business operations would not be interrupted. However, the customer refused an after hour conversion because overtime charges would have had to be paid by the customer. Subsequently, the conversion was scheduled for the late afternoon. Once the conversion had taken place and the customer experienced problems, he decided to work back his regular analog business lines. This occurred after 5:00 p.m. A Manager in BellSouth, personally stayed in the office to verify the customer had dialtone before leaving. The customer was out of service approximately two to three hours. BellSouth's manager went out of her way to assist the customer through this process. She gave the customer her pager number and worked through the weekend with him adding other features to his service, i.e., MemoryCall, remote access to call forwarding, call waiting, etc., and was able to get his features working properly.

No, the customer was not credited for the service interruption. Since he had the choice of doing the conversion after hours, he is not entitled to a credit.

Question: ABA made five payments to BellSouth in December, 1998 totaling $2335.98. The payments were $500.00 (12-1-98), $1283.89, $343.46, $63.87 (12-8-98), and $144.76 (12-12-98). Copies of payment receipts are included in Attachment A. ABA believes that some portion of these payments should be credited to ABA. As we discussed on April 19, staff would like to know how these payments were applied e.g., to which telephone number and products.

These payments were already confirmed as posted to the customer's accounts in two memos. The first memo was to the Nancy Cortijo-Simmonds at the PSC dated 3-5-99 (a copy of which I forwarded to a BellSouth Manager via fax on 4-22-99), and in my second memo to this same Manager dated 4-26-99.

Question: As part of its resolution of the original complaint, BellSouth stated it would credit ABA

with $1989.36 for installation (for the conversion back to analog), $5489.11 for equipment, and $544.43 for an additional line (Attachments C and D). ABA says that it has not received the installation credit. Has BellSouth credited ABA yet for installation, equipment, and the additional line? If so, when were the credits issued? If not, when will the credits be issued?

The customer's 1-14-99 bill for 305-374-0497-361 itemizes the adjustments and credits for the installation charges and the ISDN circuits that were disconnected. The credits totaled $2329.14. (See attached copy of bill) the last page only summarizes . no detail

no it doesn't page 1 is missing

credits only to reflect current bill period + zero installation rev. billed

The customer was actually never sent a bill for the equipment. However, a copy of the customer's equipment bill will be faxed showing a zero balance. Also another copy of the bill shows the initial charge and the subsequent credit, leaving a zero balance on the equipment bill.

In reference to the additional line credit of $544.43, BellSouth's Manager submitted a request to adjust the customer's December local service which she had thought had not been credited yet. When the credit was initiated, it was rejected by BellSouth's Accounting Department as a duplicate - indicating that this credit had already been processed. This Manager found however, that other charges needed to be adjusted. Sheadvised the customer of this new credit amount of $119.69 in her letter to him dated 2-8-99 (a copy of which is also attached). The credit posted on the following accounts:

what is $3200 charge for installation 1959.36

305 374-0497-361	The 1-99 bill included a late payment charge for December. A credit for this late payment charge posted on the customer's bill on 3-18-99 totaling $39.69.
305 374-3131-710	A credit for $56.00 install on one business line and $12.00 for each subsequent ($24.00) posted on the customer's bill on 02-23-99 totaling $86.00.

charge on attached bill is for 28.73

The total of these amounts equals $119.69.

Question: ABA believes that it should receive a credit for the modems it purchased from another vendor. Did BellSouth's equipment credit of $5489.11 include ABA's modems purchased from another vendor? If so, what was the amount of the credit? If not, were the modems available for purchase from BellSouth?

ok When Mr. Lora contacted BellSouth requesting a phone system, he knew exactly what he wanted. He already had the phones, and wanted to purchase from BellSouth an ISDN Ready Bundled Compact Integrated Communications System which included six digital modems CTA 500 to connect to his computers. These six CTA 500 modems were included in the package price of the equipment.

If the customer purchased additional modems, those modems were his choice and no credit is due from BellSouth for those additional modems.

Question: ABA has not received credit for monthly ISDN charges. Although a December 23, 1998 e-mail from a BellSouth Manager stated that the customer is responsible for monthly charges, it appears that the monthly charges referred to are the monthly analog charges after the conversion from ISDN. A February 5, 1999 e-mail from this same Manager stated that "all installation and monthly charges associated with the ISDN lines would be adjusted." Has BellSouth credited the customer for monthly ISDN charges? If it has not, when, and for how much will BellSouth credit ABA?

may exp w/ answers

We are still working on this breakdown for you and will provide this answer by Tuesday, May 25.

Question: ABA's claim that BellSouth placed an adapter on ABA's ISDN line(s) to change service from ISDN to analog without ABA's knowledge. How long had the adapter been on the customer's line(s) before the customer was notified? Was the customer charged for ISDN service while the

ok

adapter was on the line? If so, how much was the customer charged, by telephone number and amount? If not, what rate was the customer charged?

On installation the customer wanted jacks installed for his computers which is standard practice. Upon installation a BellSouth Installation Technician, asked the customer which PC's were going to access the ATA. An ATA is an adapter to let standard PC modems talk to the phone system via analog rather than digital, i.e., to access lines in a pool group. At that time the customer advised the Installation Technician that he was going to purchase ISDN modems for his PC's. The Technician told him his Data Technician would have to let BellSouth's Technician know what he needs from our system. The Installation Technician does not remember the exact outcome, but thinks the customer needed to purchase more equipment from his PC vendor, which he instructed him on what he would need.

ok

In summary, the adapter was discussed with the customer in advance and was requested by the customer. It was installed with the initial installation and disconnected when the system was removed.

Additional Question: What was the disconnect date of account number 305-374-0838-360? When was 305-374-0838-360 transferred to account 305-374-0497-361?

ok

We actually issued a C order changing the billing account number on 305-374-0838 to 305-374-0497 which occurred on 12-18-98. All credits and debits were transferred at that time.

Additional Question: The total payment of $1783.89 (Two payments of $500.00 and $1283.89) is close to the amount due on 305-374-0497-361 which was opened 9-4-98, the same date shown under 305-374-0838-360. Also, it shows that only a balance of $130.20 was transferred to 0497-361. Please check to make sure where this payment was credited. If we show that there was only a balance of $130.20 on 9-4-98, then what did the $1783.89 to towards when made in December of 98? Were there additional charges on 0838-360 that were outstanding? Is there a chance that these payments should have gone towards the outstanding $1889 on account 0497-361?

Since the entire account was not disconnected, the remaining line would carry the initial installation date of 9-4-98.

The two payments of $500.00 and $1283.89 were posted on account number 305-374-0838-360 on the December 14, 1998 bill. This bill had a previous balance of $4499.85 with a balance due of $4204.62.

On the January 14 bill for 305-374-0838-360 the balance was transferred to 305-374-0497-361, however the January 14th bill had additional charges for tolls in the amount of $130.20. On January 18, the remaining charges of $130.20 was transferred to 305-374-0497-361.

As requested, following is a summary of the customer's accounts and the balance due on each account:

305-374-3131-710	$2,669.27	Live Acct No payments recd on acct since 1FB installation on 12-18-99.
305-374-0497-361	1,889.47	Disc Acct 54B 9-4-98 to 12-31-98 transfrom 305-374-3131
305-374-0497-618	1,181.72	Disc Acct 1FB 1-15-85 to 8-28-98 (trans. fr 305-374-3131 617)
305-867-1314-541	598.97	Disc Acct 1FB 6-4-98 to 8-7-98
305-374-0838-923	283.14	Disc Acct 1FB 10-9-89 to 8-27-98
305-374-6404-411	23.91	Disc Acct RCF 4-16-92 to 3-2-98
ok 305-374-6404-777	35.09	Disc Acct RCF 8-29-98 9-4-98
ok 305-Y85-5587-703	5,710.41	Disc Acct Directory Advertising
ok 305-Y87-0912-912	15,097.17	Disc Acct Directory Advertising

If I can be of further assistance, please do not hesitate to call.

Yours truly,

Nancy H Sims (BA)

Director – Regulatory Relations

** BELLSOUTH **

Page 2

ABA PROFESL ASSOC
Account Number: 305 374-0497 361 0442
Bill Period Date: Jan 14, 1999
Detailed Statement of Charges

Local Usage

	Amount
Local Usage Summary for 305 374-0497	
ISDN Usage Summary	

Calls	Total Mins	Cost/Min	Charges
0	0	.010	.00

1. Local Usage Summary ..... .00

Local Usage Summary for 305 374-0838
ISDN Usage Summary

Calls	Total Mins	Cost/Min	Charges
494	978	.010	9.78
	Usage Allowance		76.80CREDIT

2. Local Usage Summary ..... .00

Local Usage Summary for 305 374-0838
Local Measured Usage to the Expanded Area

Calls	Total Mins	Charges
4	55	3.46

3. Local Usage Summary 3.46

Local Usage Summary for 305 374-7246
Local Measured Usage to the Expanded Area

Calls	Total Mins	Charges
18	54	3.96

4. Local Usage Summary 3.96

Total Local Usage 7.42

Other Charges and Credits — Amount

5. Late Payment Charge (1.5% of Unpaid Regulated Balance) 25.44
6. Late Payment Charge (1.5% of Unpaid Unregulated Balance) 3.29 **

Work Completed On Dec 18, 1998
PON: MARTY LOMA SO: CQFTR136
374-0497
Circuit Number: 70.IBSB.512986..SB
Partial month's credit for service removed (12/19/98 - 01/13/99)

7. 2 ISDN B Channel Threshold Voice/Data ($32.50/mo) 28.17CREDIT
8. ISDN Threshold Pricing, Basic Rate DSL Access Arrangement, Business ($55.00/mo) 47.67CREDIT
9. FCC Charge for Excess Line Port for Basic Rate ISDN Digital Subscriber Line ($2.44/mo) 2.11CREDIT

Credit (12/19/98 - 01/13/99)

The following information was provided by BellSouth showing all payments paid on telephone number 305-374-0838:

- **$ 500.00 - posted on December 1, 1998**
- **1,283.89 - posted on December 8, 1998**
- **144.76 - posted on December 12, 1998**

Because you expressed additional concerns regarding credits or refunds that may be due to you, the entire file on this matter is being forwarded to the PSC's Division of Communications for review. Someone from that division will contact you in the near future.

Sincerely,

Nancy Cotijo-Simmonds

Nancy Cotijo-Simmonds
Regulatory Specialist I
Division of Consumer Affairs

c: Division of Communications

ABA PROFESSIONAL ASSOCIATION INC.

801 BRICKELL BAY DRIVE
TOWER-4 SUITE #662 MIAMI FL, 33131

Phone 1-800-222-4373 USA & Canada
1-800-344-8211 From The Caribbean
800-122-06 From Venezuela
0130-814747 From Germany
046-059416 From Switzerland

FAX 1-800-442-0497 From USA, Canada, & Caribbean ELSEWHERE 305-374-0497
LOCAL NUMBERS 305- 374-3131, 374-3162, 374-6404 374-0838,

E-MAIL ABAHERE@WORLDNET.ATT.NET

MARCH 26, 1999

PUBLIC SERVICE COMMISSION
COMMUNICATIONS DIVISION
C/O LEROY RASBERRY
VOICE 1-800-342-3552
FAX 1-800-511-0809

COMPLAINT #237627R CONTINUATION.

REPORT #36

SUBJECT : TO FORWARD COMPLAIN TO DIVISION COMMUNICATIONS,

DEAR MR. RASBERRY AS PER YOUR SUGGESTION AT THIS POINT UPON YOUR RECOMMENDATION AND SUGGESTION WE ACCEPT YOUR PROPOSAL TO DROP THE REQUEST FOR INFORMAL CONFERENCE.

WE RESPECTFULLY REQUEST TO TRANSFER OUR JUST AND FAIR COMPLAIN TO THE DIVISION OF COMMUNICATION WHEREAS THEY WILL ASSIST US IN TRYING TO SETTLE THIS MATTER. .

SINCERELY,

MANUEL LORA

Shirley Stokes

From: Shirley Stokes
Sent: Thursday, January 27, 2000 8:01 AM
To: Anne Marsh
Cc: Shirley Stokes; Carmen Pena; Leroy Rasberry
Subject: RE: complaint of manuel lora (237627R)

Since you are familiar with this one, you can decide on the title. Yes, I would like to have a copy of the rec. Thanks.

-----Original Message-----
From: Anne Marsh
Sent: Thursday, January 27, 2000 7:50 AM
To: Shirley Stokes
Cc: Leroy Rasberry
Subject: RE: complaint of manuel lora (237627R)

I do not know if you have any familiarity with this case at all. It is pretty involved. I have discussed before with Leroy and Carmen. The customer is not paying his bills, he keeps protesting that he shouldn't have to pay for ISDN. Unfortunately, he hasn't paid for anything else either.
BellSouth has provided about $10,000 in credits for the ISDN. I have done an extensive analysis on the bills and have determined that the customer is not owed anything further. I have written a recommendation to deny his request for informal conference.

Is there any specific language that should be used for the docket title? I would like to get a docket opened today. I can provide a copy of the rec to you this morning.

-----Original Message-----
From: Leroy Rasberry
Sent: Wednesday, January 26, 2000 5:44 PM
To: Anne Marsh
Cc: Carmen Pena; Leroy Rasberry
Subject: RE: complaint of manuel lora (237627R)

Hi Anne,

Sorry about the delayed response.

Please assign Shirley Stokes as the CAF representative on the case.

Thanks

-----Original Message-----
From: Anne Marsh
Sent: Monday, January 24, 2000 4:26 PM
To: Leroy Rasberry

Subject: complaint of manuel lora (237627R)

I have written a recommendation to deny Mr. Lora's request for informal conference, to be taken up on the 2/15/00 agenda. There is no docket opened at this time. What role will you be playing in the recommendation?

STATE OF FLORIDA

Commissioners:
JOE GARCIA, CHAIRMAN
J. TERRY DEASON
SUSAN F. CLARK
JULIA L. JOHNSON
E. LEON JACOBS, JR.

DIVISION OF CONSUMER AFFAIRS
BEVERLEE DEMELLO
DIRECTOR
(850) 413-6100
TOLL FREE 1-800-342-3552

Public Service Commission

August 3, 1999

Mr. Manuel Lora
ABA Professional Association, Inc.
Tower #4 - Suite #662
801 Brickell Bay Drive
Miami, FL 33131

Dear Mr. Lora:

This is to inform you that the Florida Public Service Commission (PSC) received your request for an informal conference against BellSouth Telecommunications, Inc. (BellSouth). Your request is being processed, and Ms. Anne Marsh, who is a staff member of our Division of Communications, will be contacting you in the near future to discuss your concerns.

If you have any questions, please contact her at 1-850-413-6554 or by e-mail at amarsh@psc.state.fl.us.

Sincerely,

Leroy A. Rasberry, Chief
Bureau of Complaint Resolution
Division of Consumer Affairs

LAR:ewe

cc: BellSouth Telecommunications, Inc.

Public Service Commission

State of Florida

-M-E-M-O-R-A-N-D-U-M-

DATE: August 3, 1999

TO: Anne Marsh - Division of Communications

FROM: Leroy A. Rasberry - Bureau Chief of Complaint Resolutions - Division of Consumer Affairs

RE: Informal Conference Request

Please do a preliminary review of the informal conference request concerning ABA Professional Association, Inc., against BellSouth Telecommunications, Inc.

237627R - ABA Professional Association, Inc.

STATE OF FLORIDA

Commissioners:
JOE GARCIA, CHAIRMAN
J. TERRY DEASON
SUSAN F. CLARK
JULIA L. JOHNSON
E. LEON JACOBS, JR.

DIVISION OF CONSUMER AFFAIRS
BEVERLEE DEMELLO
DIRECTOR
(850) 413-6100
TOLL FREE 1-800-342-3552

Public Service Commission

FACSIMILE TRANSMITTAL COVER SHEET

DATE: August 3, 1999

TO: Sherry Coxe

OFFICE/BUSINESS: BellSouth Telecommunications, Inc.

FAX NUMBER: (305) 350-9091

FROM: DIVISION OF CONSUMER AFFAIRS

FAX NUMBER: (850) 413-6362

TELEPHONE NUMBER: (850) 413-6100 OR 1-800-342-3552

COMMENTS:

NUMBER OF PAGES, INCLUDING THIS COVER SHEET: 3

HP OfficeJet
Personal Printer/Fax/Copier

Fax Log Report

Aug-03-99 04:42 PM

Identification	Result	Pages	Type	Date	Time	Duration	Diagnostic
613053509091	OK	03	Sent	Aug-03	04:41P	00:00:54	002482030022

1.3.0 2.8

ABA PROFESSIONAL ASSOCIATION INC.

801 BRICKELL BAY DRIVE
TOWER #4 SUITE #662 MIAMI FL, 33131

Phone 1-800-222-4373 USA & Canada
1-800-344-8211 From The Caribbean
800-122-06 From Venezuela
0130-814747 From Germany
046-059416 From Switzerland

FAX 1-800-442-0497 From USA, Canada, & Caribbean ELSEWHERE 305-374-0497
LOCAL NUMBERS 305- 374-3131, 374-3162, 374-6404 374-0838,

E-MAIL ABAHERE@WORLDNET.ATT.NET

JULY 30, 1999

PUBLIC SERVICE COMMISSION
C/O LEROY A RASBERY
VOICE 1-800-342-3552.
FAX 800-511-0809. 1-850-413-6120

CAPITAL CIRCLE OFFICE CENTER
2540 SHUMARUD OAK BOULEVARD
TALLAHASSEE FL 32399-0850

COMPLAINT # 237627R

DEAR SIR PURSUANT OUR CONVERSATION WE RESPECTFULLY REQUEST AN INFORMAL CONFERENCE AS SOON AS POSSIBLE. AS YOU HAD STATED SOMEONE WITHIN YOUR DIVISION WOULD HOST THIS CONFERENCE.

THANK YOU IN ADVANCE FOR YOUR PROMPT ATTENTION.

SINCERELY,

MANUEL LORA

STATE OF FLORIDA

Commissioners:
JOE GARCIA, CHAIRMAN
J. TERRY DEASON
SUSAN F. CLARK
JULIA L. JOHNSON
E. LEON JACOBS, JR.

DIVISION OF CONSUMER AFFAIRS
BEVERLEE DEMELLO
DIRECTOR
(850) 413-6100
TOLL FREE 1-800-342-3552

Public Service Commission

FACSIMILE TRANSMITTAL COVER SHEET

DATE: March 26, 1999

TO: Mr. Manuel Lora

OFFICE/BUSINESS: ABA Professional Association, Inc.

FAX NUMBER: 305-374-0497

FROM: DIVISION OF CONSUMER AFFAIRS

FAX NUMBER: (850) 413-6362

TELEPHONE NUMBER: (850) 413-6100 OR 1-800-342-3552

COMMENTS: Letter as you requested

NUMBER OF PAGES, INCLUDING THIS COVER SHEET: 2

STATE OF FLORIDA

Commissioners:
JOE GARCIA, CHAIRMAN
J. TERRY DEASON
SUSAN F. CLARK
JULIA L. JOHNSON
E. LEON JACOBS, JR.

DIVISION OF CONSUMER AFFAIRS
BEVERLEE DEMELLO
DIRECTOR
(850) 413-6100
TOLL FREE 1-800-342-3552

Public Service Commission

March 26, 1999

Mr. Manuel Lora
ABA Professional Association, Inc.
801 Brickell Bay Drive,
Tower #4 Suite#662
Miami, Florida 33131

Dear Mr. Lora:

According to our discussion on Friday March 25, 1999, I believe that the most expeditious way to proceed with our investigation of your dispute with BellSouth at this point is to transfer your case to our division of Communications for further review. By doing this, you are not waiving your rights to a future informal conference if one is needed. Once I receive your approval, I will forward the entire file to that division, and someone will be in contact with you to discuss your concerns.

If you have any questions, you may call me toll free at 1-800-342-3552, direct at 850-413-6119, by toll free fax 800-511-0809, or email me at lrasberr@psc.state.fl.us.

Sincerely,

Leroy A. Rasberry
Chief, Bureau of Complaint Resolution

LAR

cc: file

ABA PROFESSIONAL ASSOCIATION INC.

801 BRICKELL BAY DRIVE
TOWER #4 SUITE #662 MIAMI FL, 33131

Phone 1-800-222-4373 USA & Canada
1-800-344-8211 From The Caribbean
800-122-06 From Venezuela
0130-814747 From Germany
046-059416 From Switzerland

FAX 1-800-442-0497 From USA, Canada, & Caribbean ELSEWHERE 305-374-0497
LOCAL NUMBERS 305- 374-3131, 374-3162, 374-6404 374-0838,

E-MAIL ABAHERE@WORLDNET.ATT.NET

MARCH 25, 1999

BELL SOUTH
PUBLIC SERVICE COMMISSION
C/O BEVERLY DEMELLO
VOICE: 1-800-342-3552
FAX: 1-800-511-0809

TO: BEVERLY DEMELLO

I AM REQUESTING FOR AN INFORMAL CONFERENCE BETWEEN BELL SOUTH AND MY FIRM ABOUT SOME CREDIT ADJUSTMENTS DUE TO US. I UNDERSTAND THERE WAS A MISUNDERSTANDING ABOUT PAYMENTS THAT WERE MADE. I AM FULLY AWARE OF FACTS THAT PAYMENT WAS MADE TO BELL SOUTH AND BELL SOUTH ACKNOWLEDGES THIS AS WELL.

SOME HOW I UNINTENTIONALLY MISLED OR MISINFORMED OTHERS WHICH CAUSED THEM TO IGNORE THE FACTS DEPICTED IN LETTERS BY MANUEL LORA WHICH CLEARLY STATES THAT INSTALLATION, SERVICE AND EQUIPMENT WAS CREDITED ONLY PARTIALLY FROM 8/98 TO 12/31/98.

PAYMENTS WERE MADE WHICH SHALL BE CREDITED.

SINCERELY YOURS,

GARY MARCELIN

ABA PROFESSIONAL ASSOCIATION INC.

801 BRICKELL BAY DRIVE
TOWER-4 SUITE #662 MIAMI FL, 33131

Phone 1-800-222-4373 USA & Canada
1-800-344-8211 From The Caribbean
800-122-06 From Venezuela
0130-814747 From Germany
046-059416 From Switzerland

FAX 1-800-442-0497 From USA, Canada, & Caribbean ELSEWHERE 305-374-0497
LOCAL NUMBERS 305- 374-3131, 374-3162, 374-6404 374-0838,

E-MAIL. ABAHERE@WORLDNET.ATT.NET

MARCH 8, 1999

PUBLIC SERVICE COMMISSION
C/O NANCY SIMMONDS
VOICE 1-800-342-3552
FAX 800-511-0809.

COMPLAINT #237627R CONTINUATION.

REPORT #33

SUBJECT : ATTACHED PAID RECEIPTS

PURSUANT TO YOUR CONVERSATION ON THIS DATE WITH MR. LORA , WE SUBMITT THE ATTACHED REQUESTED RECEIPTS WITH THIS LETTER. AS PREVIOUSLY EXPLAINED MS, PENELAS A COLLECTION SUPERVISOR FROM BELL SOUTH HAS PROVIDED US WITH THE ATTACHED REPORTS WHICH HAVE NO BEARINGS ON THIS NEW COMPLAIN.

WE BASED OUR STATEMENTS AS FOLLOW. WHEN YOU AFFORDED US THE FIRST RESPONSE GIVEN TO YOU BY BELL SOUTH REPRESENTATIVE MS PATRICIA GODSILS VIA FAX FROM THE OFFICE OF BELL SOUTH PRESIDENT .
WE REVIEWED IT AND FOUND THAT THE RESPONSE WAS LIMITED.

WE OPTED TO CONTACT MS GODSIL WHOM RIGHTFULLY EXPLAIN THAT THEY FOLLOW BELL SOUTH POLICY TO ONLY ADDRESS ISSUES RAISED BY THE COMPLAINANTS OR COMPLAINING PARTIES, HENCE WE CHOSE TO FOLLOW THEIR STYLE OF RESPONSE TO AVOID CONFUSION AND FURTHER DELAYS.

ABA PROFESSIONAL ASSOCIATION INC.

801 BRICKELL BAY DRIVE
TOWER-4 SUITE #662 MIAMI FL, 33131

3/24/99 Ms SIMMONDS Mr MARCELIN (GARY) EXPLAINED TO ME THAT YOU HAD CALLED AND GIVEN HIM THE DATES OF RECEIPTS. THERE MUST BE SOME MISUNDERSTANDING THERE IS NO QUESTIONS REGARDING THE DATES. WE HAVE THE RECEIPTS WE PROVIDED THOSE COPIES (RECEIPTS) TO YOU VIA FAX AS WELL AS BELL SOUTH. THEY BELL SOUTH ACKNOWLEDGE THEY DID IN FACT POSTED THOSE PAYMENTS TO THE COMPANY ACCOUNT.

THE ISSUE IS SIMPLE WE MADE AN ORAL COMPLAIN. THAT COMPLAIN WAS IGNORED OUR SERVICES WERE INTERRUPTED. WE WERE FORCED TO MAKE PAYMENTS (D.PHILLIPS) THEN A FORMAL COMPLAIN WAS MADE THROUGH YOU (SEE ABOVE CASE #) BELL SOUTH THEN ACKNOWLEDGED AND CREDIT THE ENTIRE ACCOUNT FOR THE LENGHT OF TIME OF THE COMPLAIN 8/-12/1998. HENCE, THOSE AMOUNTS PAID BY US DURING SAID PERIOD 8/-12/1998 SHOULD HAVE BEEN REFUNDED OR CREDITED TO THE ACCOUNT FOR FUTURE BILLING PURPOSES.

3/25/99

BELLSOUTH

N° 9341
(10-94)

Payment Receipt

Thank You...

We Appreciate Your Business!

Your payment will post to your BellSouth account within seconds.

[redacted]

37+0838#354

ABA PROFESSIONAL ASSOCIATION INC.

801 BRICKELL BAY DRIVE
TOWER #4 SUITE #662 MIAMI FL, 33131

Phone 1-800-222-4373 USA & Canada
1-800-344-8211 From The Caribbean
800-122-06 From Venezuela
0130-814747 From Germany
046-059416 From Switzerland

FAX 1-800-442-0497 From USA, Canada, & Caribbean ELSEWHERE 305-374-0497
LOCAL NUMBERS 305- 374-3131, 374-3162, 374-6404 374-0838.

E-MAIL ABAHERE@WORLDNET.ATT.NET

MARCH 8, 1999

PUBLIC SERVICE COMMISSION
C/O NANCY SIMMONDS
VOICE 1-800-342-3552
FAX 800-511-0809.

COMPLAINT #237627R CONTINUATION.

REPORT #33

SUBJECT : ATTACHED PAID RECEIPTS

PURSUANT TO YOUR CONVERSATION ON THIS DATE WITH MR. LORA , PLEASE FIND ATTACHED RECEIPTS WITH THIS LETTER. AS PREVIOUSLY EXPLAINED MS, PENELAS A COLLECTION SUPERVISOR FROM BELL SOUTH HAS PROVIDED US WITH THE ATTACHED REPORTS WHICH HAVE NO BEARINGS ON THIS NEW COMPLAIN.

WE BASED OUR STATEMENTS AS FOLLOW. WHEN YOU AFFORDED US THE FIRST RESPONSE GIVEN TO YOU BY BELL SOUTH REPRESENTATIVE MS PATRICIA GODSILS VIA FAX FROM THE OFFICE OF BELL SOUTH REGION PRESIDENT. WE REVIEWED IT AND FOUND THAT THE RESPONSE WAS LIMITED.

WE OPTED TO CONTACT MS GODSIL WHOM RIGHTFULLY EXPLAIN THAT THEY FOLLOW BELL SOUTH POLICY TO ONLY ADDRESS ISSUES RAISED BY THE COMPLAINANTS OR COMPLAINING PARTIES. HENCE WE CHOSE TO FOLLOW THEIR STYLE OF RESPONSE TO AVOID CONFUSION AND FURTHER DELAYS.

ABA PROFESSIONAL ASSOCIATION INC.

801 BRICKELL BAY DRIVE
TOWER #4 SUITE #662 MIAMI FL, 33131

KNOWING THIS WE THEN FILED A NEW COMPLAIN WITH YOUR AGENCY. SOON AFTERWARDS WE GOT A FAX FROM MS PENELAS A COLLECTION SUPERVISOR. SHE DID NOT ADDRESS ISSUES OF PAYMENTS BUT FAXED US A RATHER INFORMAL REPORT WITH NUMEROUS ACCOUNTS SOME NOT OURS WITH INFORMATION RELEVANT TO OLD ADVERTISING ACCOUNTS.

WE FELT MS GODSILS COMMITMENT TO BELL SOUTH POLICY WAS MORE APPROPRIATE. SO WHEN WE REVIEW MS PENELAS FAX AND SO NOTHING ASSOCIATED NOR RELEVANT TO THE FACTS WE WERE BAFFLED.

WE DID NOT WANT MS PENELAS OR ANY ONE ELSE TO THINK NOR SUGGEST THAT WE DO NOT WANT TO ADDRESS OTHER ISSUES, HENCE WE RESPONDED ACCORDINGLY AND PROMPTLY.

WE HAVE NO OBJECTION TO GRANT BELL SOUTH A CONTINUATION. THIS TYPE OF ETHICAL PROFESSIONAL COURTESY IS PROPER AND COMMON. EVEN THOUGH BELL SOUTH DID NOT PROVIDED US SUCH COURTESY IN DECEMBER 8, WHEN WE AS CUSTOMER FOR OVER 15 YEARS HAD RIGHTFULLY COMPLAINED TO BELL SOUTH REPRESENTATIVES AND PUBLIC SERVICE COMMISSION OFFICE.

WE HOPE THAT BELL SOUTH WILL PROVIDE US EXTENSIONS WHEN WE ASK FOR THEM.

PLEASE REVIEW ALL ATTACHED RECEIPT FOR TIME FRAME WITHIN THE COMPLAIN WHEREAS BELL SOUTH HAS ALLREADY PROVIDED ALL CREDITS FOR SERVICES, INSTALLATIONS, OCCURING CHARGES, EQUIPMENTS ETC.

SINCERELY YOURS,

GARY MARCELIN

CC: MANUEL LORA
CC: PATRICIA GODSIL
CC: GONZALO DORTA

BELLSOUTH

No Document Payment Receipt

RF-9343 (11-96)

Area Code	Telephone Number	Customer Code	Check Digit
305	374 · 0838	360	

Billing Name: ABA PROFESSIONAL

Street Address: 1101 BRICKELL AVE

City: MIAMI State: Fl. Zip Code: 33231

Please Check One

- [x] Payment $ 1283.87
- [ ] Deposit $
  ID Type & Number
- [ ] Advance Payment $

Thank You ...

We Appreciate Your Business!

Your payment will be posted to your BellSouth account within seconds.

In order to save time in the future, please bring your telephone bill.... or you may Mail Your Payment.

SEARS CPL GB 2
RG PA P 0883 1283.87 CRM
PAYM 305-374-0838 (circled) 041

Ply 1 - Customer's Copy Ply 2 - Agency's Copy

BELLSOUTH

No Document Payment Receipt

RF-9343 (11-96)

Area Code	Telephone Number	Customer Code	Check Digit
305	374 · 3131	555	

Billing Name: ABA PROFESSIONAL

Street Address: 1101 BRICKELL AVE

City: MIAMI Fl. State: Zip Code: 33231

Please Check One

- [x] Payment $ 343.46
- [ ] Deposit $
  ID Type & Number
- [ ] Advance Payment $

Thank You ...

We Appreciate Your Business!

Your payment will be posted to your BellSouth account within seconds.

In order to save time in the future, please bring your telephone bill.... or you may Mail Your Payment.

SEARS CPL GB 2
RG PA P 0883 1250[illegible] 343.46 CRM
PAYM 305-374-3131 (circled) 047

Ply 1 Customer's Copy Ply 2 - Agency's Copy

CONFIRMED

om: Leroy Rasberry
: Kate Smith
oject: fwd: ABA 237627R - Manuel Lora

=NOTE==========7/28/99==5:32pm==========
: Anne Marsh, Carmen Pena, Leroy Rasberry

.....

te,

ease process this informal conference request as usual. Issue letter to stomer and notice to company via CATS form note.

rmen/Kate,

in Marsh in CMU is looking at the file and will be the contact in technical or the customer. I believe it is safe to include her name in the letter as contact person, should the customer have questions or want to forward dditional information. Ann is also the person that will handle the nformal conference, should one be necessary (with CAF assistance in oderating the conference).

will need to get our copy of this case, so we can file it appropriately. nn is forwarding us copies of the customer's most recent filing.

wd=by:=Anne=Marsh====7/29/99==7:54am==========
wd to: Carmen Pena, Kate Smith, Leroy Rasberry

.....

o ahead and include my name. I will wait until after the acknowledgements ave been sent, then contact him to let him know what I plan to do. I will e asking him to provide some documentation that we don't have, so it may be little while before we can acatually schedule a conference.

State of Florida

Public Service Commission

-M-E-M-O-R-A-N-D-U-M-

DATE: April 9, 1999

TO: Walter D'Haeseler, Director, Division of Communications

FROM: Beverlee S. DeMello, Director, Division of Consumer Affairs

RE: Case of ABA Professional Association, Inc., Mr. Manuel Lora, against BellSouth Telecommunications, Inc. (BellSouth) CATS #237627R, improper ISDN charges.

According to Mr. Manuel Lora, he contracted with BellSouth to provide an ISDN line, which was installed, but later BellSouth placed an adapter on the line and changed the capabilities from digital to analog. The customer stated that BellSouth failed to inform him of this change. This change caused operational problems and additional expenses to Mr. Lora as he tried to correct the situation, not knowing that BellSouth had caused the change. He does not feel that he should have been required to continue to pay the higher rate if he was not receiving the service, and believes that a refund is due on the difference between the analog and digital charges.

To date, CAF has obtained a total credit in the amount of $8,022.90:

$1,989.36	**-**	**past installation charges**
5,489.11	**-**	**returned equipment**
544.43	**-**	**an additional line**

However, I believe that CMU is better prepared to decipher the customer's billing issues and provide a final resolution of his complaint.

Mr. Manuel Lora is prepared to give CMU the details of his complaint and awaits a call. He can be reached at 305-374-0838 extension 29. 305 979 5106

Please let me know if you have any questions.

called x.29
4/14/99
3:05 pm
left voice mail

Rec'd 4/14/99
called CAF analyst
4/14 + L v/m

---

om: Anne Marsh
: Sue Ollila
bject: fwd: ABA complaint

=NOTE==========7/29/99=10:48am==========
: Kate Smith

.....

you still have the original file? I seem to have a copy, not the
iginal, and Consumer Affairs can't find it either.

d=by:=Sue=Ollila====7/29/99=10:59am==========
d to: Anne Marsh

.....

nsumer Affairs sent me what I thought was its original. I also have the
iginal of material I gathered/generated. I'll be happy to give you the
iginal, but I'll need to get myself a copy first.

:d=by:=Anne=Marsh====7/29/99=11:00am==========
:d to: Sue Ollila
:: Kate Smith

.....

onsumer Affairs needs the original back. Kate, Sue will get it back to you.
Thanks, Sue.

:d=by:=Sue=Ollila====7/29/99=11:02am==========
vd to: Anne Marsh, Kate Smith

.....

nich original? CAF's or my part?
vd=by:=Kate=Smith====7/29/99=11:05am==========
vd to: Sue Ollila

.....

HANK YOU, SUE! We would like our original back, but if you have additional
aterial, we will need that eventually so that in the end the file will be
omplete. If you want to keep your originals until after the case is over,
hat's fine, but could we have copies for our files?

-)))

hanks again.

wd=by:=Sue=Ollila====7/29/99=11:09am==========
wd to: Kate Smith

.....

'll get your original back to you after I get a copy made for myself, and
'd prefer to keep my originals until the case is over, so I'll get you a
:opy of them. I'll email you when they're available - I can either put them
n the mail or you could have someone pick them up. Thanks.

STATE OF FLORIDA

Commissioners:
JOE GARCIA, CHAIRMAN
J. TERRY DEACON
SUSAN F. CLARK
JULIA L. JOHNSON
E. LEON JACOBS, JR.

DIVISION OF CONSUMER AFFAIRS
BEVERLEE DEMELLO
DIRECTOR
(850) 413-6100
TOLL FREE 1-800-342-3552

Public Service Commission

April 9, 1999

Mr. Manuel Lora
ABA Professional Association, Inc.
Tower #4 - Suite #662
801 Brickell Bay Drive
Miami, FL 33131

RE: FPSC Inquiry #237627R

Dear Mr. Lora:

This is in response to your communications with the Florida Public Service Commission (PSC) concerning BellSouth Telecommunications, Incorporated (BellSouth).

In an effort to resolve your complaint, we contacted the company and requested a detailed written report regarding your concerns. It is my understanding that a representative from the utility contacted you to discuss this matter. Based on a review of the information provided to the PSC, it appears that the company has made a total adjustment of $8,022.90.

The following are explanations for the adjustments that were issued:

- **$1,989.36 - installation charges**
- **5,489.11 - equipment order**
- **544.43 - additional line**

Per your conversation with Ms. Powanda on December 15, 1998, it was agreed that you would be responsible for the recurring monthly charges. Your additional concern of three payments that had not yet been posted was investigated.

ɔ OfficeJet
rsonal Printer/Fax/Copier

Fax Log Report

Mar-26-99 05:44 PM

entification	Result	Pages	Type	Date	Time	Duration	Diagnostic
3053740497	OK	02	Sent	Mar-26	05:43P	00:00:46	002482030022

2.8

From: Sue Ollila
To: David Dowds Subject: fwd: complaint

===NOTE==========4/21/99==3:34pm==========
fyi,

I'm working on the complaint you assigned to me (ABA Professional Services). CAF called and said that ABA, which has been threatened with disconnection of its service, called with a new complaint. THe new complaint is, apparently, related to whether or not 2 payments to BellSouth have posted (in the receipts I've seen, ABA typically makes payment at a BellSouth agency without copies of bills). CAF told ABA that I'm handling ABA's complaint and that any information should be faxed to me. I'm handling ABA's old complaint that was too technical for CAF, and now, apparently, the new one. While it to make more sense for one division/person to be handling a party's complaints, rather than 2 divisions, it troubles me that CAF is so quick to say if it concerns ABA, then it goes to Sue Ollila in CMU. What do you think?

Fwd=by:=David=Dowds===4/21/99==3:36pm==========
Fwd to: Sue Ollila
CC: Sally Simmons
.....
??? Sally?
Fwd=by:=Sue=Ollila==========
Fwd to: David Dowds, Sally Simmons
.....
I spoke with an ABA representative - apparently there was some misunderstanding within ABA, and between ABA and Consumer Affairs. ABA's president had already provided me with the documentation for the two additional payments.

Brenda Green

305 374 0497 x618

800-285 4420

x7822

ISDN installation
create new Accts

MR. LORA
BellSouth

May 26, 1999

STATE OF FLORIDA

PUBLIC SERVICE COMMISSION

2540 SHUMARD OAK BOULEVARD
TALLAHASSEE, FL 32399-0850

TO:

Mary Rose Sirianni

BST 222-8640

FROM:

Laura King

850 413-6589

RE:

Note:

Summary of ABA's BellSouth Accounts (5/19/99 Letter from Nancy Sims)

Account	Balance Due	Account Status	Notes
305-374-3131-710	$2,669.27	Live	No payments received on account since 12/18/98
305-374-0497-361	$1,889.47	Disconnected	S4B (Balance transferredfrom 305-374-0838-360)
305-374-0497-618	$1,181.72	Disconnected	1FB (Balance transferred from 305-374-3131-617)
305-867-1314-541	$598.97	Disconnected	1FB
305-374-0838-923	$283.14	Disconnected	1FB
305-374-6404-411	$23.91	Disconnected	RCF
(1) 305-374-6404-777	$35.09	Disconnected	RCF
(2) 305-Y85-5587-703	$5,710.41	Disconnected	Directory Advertising
305-Y87-0912-912	$15,097.17	Disconnected	Directory Advertising

(1) 4/26 BellSouth letter shows account closed 9/4/98 and $0 balance. *Why is there a balance shown in 5/19 letter?*

(2) 4/26 BellSouth letter shows $10,337.26 advertising balance. *Why did it decrease between 4/26 and 5/19? Did ABA make a payment?*

(3) 4/26 BellSouth letter shows 1FB account 305-374-2075-606, closed 6/6/98 with a balance of $166.38. *Why isn't this account on 5/19 letter? Did ABA make a payment?*

(4) 4/26 BellSouth letter shows open 1FB account, no balance shown: 305-672-3011-337 *Why isn't this account shown on 5/19 letter?*

Mary Rose,

it's actually the attachment to 4/26 letter.

Talk to you next week.

Sue

From: Sue Ollila
To: David Dowds
Subject:
ABA (Manuel Lora) complaint
against BellSOuth

===NOTE==========

just an fyi in case something happens while I'm gone. . .

BST responded to my data request; its response created more questions for BST. I spoke to MaryRose and left her a voicemail on her mobile phone explaining my questions. I also left her a chart (in an envelope with her name on it, on my desk) detailing some discrepancies between BST's April listing of ABA's many accounts and its May listing of accounts. I'll be talking to her in person week of 6/1.

In the meantime, I called ABA today and left a message explaining that the delay continues. MaryRose agreed that ABA's service would not be disconnected while the dispute is going on. So, with any luck, you shouldn't be bothered.

Disputed Amount:

2335.98] diff = $333.29

Live Acct 2669.27

Disc. Accts 4,012.30
excl. Directory
Advertising

Directory Adver. $20,807.58

Rule 25-4.070(1)(b)

- service interruption excess of 24 hours - credit is due

* also 25-4.110(2) Customer Billing for LECs

25-4.0770 cust appts

⇒ LEC must make 95% of appts

7-12 pm
12-5 pm
5-9 pm

BST OK on rules

A. 4 svc. charges

A. 5. 4

A42 ISDN
A 112.31 essex ISDN

305-374-0838

12/14/98 4499.85 past due

− 1783.89 December payments

2715.96

+ 1488.66 current charges

12/14/98 4204.62 (Blue 1)

1/14/99 - 305-374-0497.361 (Blue2)

4204.62?

~~Ad~~ Jan bill: page 1 not attached = which is background on summa

no total page attached

shows handwritten credit total of $2329.14

but shows pos. Adj. of $3209.94

made on 12/28/98

where did this come from?

Blue2 2/8/99 Letter - remaining balance 1989.36 plus taxes

305-979 5406

cellular ↗

374 3131
0497
3162
0838
6404

5/4 9:30 December - last date of any payment

25.22.032

5/5 sent fax + fedex
~~will call~~ →
will send copy disc modem bill once get it

Mary Rose

→ no credit -

initial conversion →
→ disconnected
Aug, Sept

4/22/99 ≈ between 11:00 & 11:30am

GARY called left v/m I ret'd call. Went over my letter with him. Turned out 2 payments he called CAF about yesterday were already listed on fax Manuel LORA sent me. He SAID ABA was <u>not</u> supposed to pay installation charges - he has a work order that says that. He didn't know if ABA had Actually paid installation charges (ABA received x $2000 refund for installation) - he was going to check for me.

4/23/99 Gary said ABA didn't receive installation credit.

4/26/99 ~~called with~~ met with Mary Rose

4/27/99 rec'd ABA's fax. Spoke to Gary - told him installation credit for digital to ANALOG - not what he thought, ANALOG to digital

4/15/99 3:40pm

Manuel Lora doesn't know how much additional is owed by BellSouth

in December 1998 paid ~~$2000~~ in 4 payments

will fax info tonight

4/16/99 1pm Gary Marcelin (?) called to see if I'd received the fax. No, because it was sent to an 800 number - not the number I told Mr. Lora yesterday

4/16 1:10 fax received, also received v/m from Gary asking to confirm receipt of fax call back @ 1:20 - asked him to send copies of bills that match payment records

4/19 Gary faxed info. Spoke to Mary Rose. She will find out ~~how~~ where the Dec. payments were credited. I'll call Gary when her info gets here

ABA

5/13

Gary Marcelin called to check on status. Told him he used wrong fax #, said "N" attachment not received + where was digital modem invoice

5/13 left v/m MRS – amounts owed

5/18 Gary called status – asked where "N" was + digital modem invoice – he transferred me to Mr. Lora – told him same thing. Again said he would get it to me.

5/21 – no answer at 374 0838 (rang twice disconnected)
sent Dave email advising him of status
tried 0838 again – got answering machine + left msg – more ? for

BST → left wave for then
etc.

Summary of ABA's BellSouth Accounts (5/19/99 Letter from Nancy Sims)

Account	Balance Due	Account Status	Notes
305-374-3131-710	$2,669.27	Live	No payments received on account since 12/18/98
305-374-0497-361	$1,889.47	Disconnected	S4B (Balance transferredfrom 305-374-0838-360)
305-374-0497-618	$1,181.72	Disconnected	1FB (Balance transferred from 305-374-3131-617)
305-867-1314-541	$598.97	Disconnected	1FB
305-374-0838-923	$283.14	Disconnected	1FB
305-374-6404-411	$23.91	Disconnected	RCF
(1) 305-374-6404-777	$35.09	Disconnected	RCF
(2) 305-Y85-5587-703	$5,710.41	Disconnected	Directory Advertising
305-Y87-0912-912	$15,097.17	Disconnected	Directory Advertising

(1) 4/26 BellSouth letter shows account closed 9/4/98 and $0 balance. *Why is there a balance shown in 5/19 letter?* See 6/1 letter - typo

(2) 4/26 BellSouth letter shows $10,337.26 advertising balance. *Why did it decrease between 4/26 and 5/19? Did ABA make a payment?* probably a mistake

(3) 4/26 BellSouth letter shows 1FB account 305-374-2075-606, closed 6/6/98 with a balance of $166.38. *Why isn't this account on 5/19 letter? Did ABA make a payment?*
Acct chopped out of system - don't know why

(4) 4/26 BellSouth letter shows open 1FB account, no balance shown: 305-672-3011-337 *Why isn't this account shown on 5/19 letter?*
new name, same offices
"Peace of Mind Investigating"
cust. making regular payments

left for MRS
5/21/99

Payments Made by ABA

Date	Account	Amount Paid	Balance Due	Type of Service
12/1/98	old: 305-374-0838-360 new: 305-374-0497-361	$500.00	See Chart Below	S4B - ISDN
12/8/98	old: 305-374-0838-360 new: 305-374-0497-361	$1,283.89	See Chart Below	S4B - ISDN
12/8/98	305-374-3131-555	$343.46	$0	1FB - Business Line
12/8/98	305-374-6404-618	$63.87	$0	RCF - Remote Call Forwarding
12/12/98	305-374-0838-359	$144.76	$0	1FB - Business Line

Didn't received
Att. N

(B) accts open + closed

(C) adaptor

(L) system fully digital

(K) cellular bills

#3209.

transfer

call directly
Sheri Cox
305
347 5475

STATE OF FLORIDA

Commissioners:
JOE GARCIA, CHAIRMAN
J. TERRY DEASON
SUSAN F. CLARK
JULIA L. JOHNSON
E. LEON JACOBS, JR.

DIVISION OF
TELECOMMUNICATIONS
WALTER D'HAESELEER
DIRECTOR
(850) 413-6600

Public Service Commission

June 18, 1999

Mr. Manuel Lora
ABA Professional Association Inc.
801 Brickell Bay Drive
Tower-4, Suite #662
Miami, Florida 33131

Re: Your complaints against BellSouth (CATS # 237627R, improper ISDN charges)

Dear Mr. Lora:

As we have discussed, Consumer Affairs, which handled your original complaint concerning the ISDN service you ordered from BellSouth, forwarded your most recent complaint to the Division of Telecommunications because of the complexity of the billing issues.

Consumer Affairs, in its April 9, 1999 letter to you, stated that BellSouth made a total adjustment of $8,022.90 to you, including $1,989.36 for installation charges, $5,489.11 for the equipment, and $544.43 for an additional line.

You questioned the installation credit of $1,989.36 because your initial installation of ISDN was supposed to be free, according to literature BellSouth sent you. The initial installation to change your service to ISDN was free. However, installation charges applied when you changed your service back to regular business from ISDN. Those installation charges, totaling $1,989.36, are the installation charges for which BellSouth gave you credit.

You were concerned that your December, 1998 payments to your accounts, totaling $2,335.98, were improperly credited by BellSouth, and believed you were due a refund. In December, 1998 you made five payments on your BellSouth accounts: $500.00 on December 4, $1,283.89, $343.46, and $63.87 on December 8, and $144.76 on December 12. The chart on page 2 shows the account, your payment, the status of the account, and the type of account.

December, 1998 Payments

Account Number	Amount Paid	Date Paid	Status of Account
305-374-0838-360	$500.00	12/4/98	Disconnected ISDN account, balance transferred to 305-374-0497-361
305-374-0838-360	$1,283.89	12/4/98	Disconnected ISDN account, balance transferred to 305-374-0497-361
305-374-3131-555	$343.46	12/8/98	Regular business line account, open from 8/29/98-9/4/98
305-374-6404-618	$63.87	12/8/98	Remote call forwarding account, open from 4/21/98-8/21/98
305-374-0838-359	$144.76	12/12/98	Regular business line account, open from 9/1/98-9/4/98

As you can see by the table, your December, 1998 payment amounts of $343.46, $63.87, and $144.76 were made to non-ISDN accounts which were closed in August and September, 1998. These payments were made to closed regular business accounts with outstanding balances. Your payments brought the account balances down to $0 for each of these accounts.

The remaining payments, totaling $1,783.89, appear on the disconnected ISDN account bill dated December 14, 1998. This account had a previous balance of $4,499.85, with a balance due of $4,204.62. The balance due amount of $4.204.62 includes the payments of $1,783.89. The account balance was transferred to account 305-374-0497-361 effective with the January 14, 1999 bill date. This account, as of May 19, 1999, had a balance of $1,889.47. The difference between $4,204.62 and $1,889.47 is $2,315.15 which includes credits applied to your ISDN account for monthly ISDN service charges and late payment charges. The remaining balance on your account consists of toll charges, which, according to BellSouth, you have agreed to pay. Therefore, you are not entitled to a further credit from BellSouth because of your December payments.

In summary, total adjustments of $10,338.05 were applied to your account for ISDN service.

Your other complaints included the following: during your initial ISDN installation, your service was interrupted yet you were not credited; BellSouth did not reimburse you for your cellular expenses while your service was interrupted; BellSouth placed an adapter on your ISDN lines to change service from ISDN to analog without your knowledge; and ABA did not receive a credit for modems you purchased from another (non-BellSouth) vendor.

In reference to your service interruption, BellSouth stated that it offered you the option of ISDN installation after business hours, but you declined because you did not want to pay overtime

charges. BellSouth also stated that your service was interrupted for approximately two to three hours, and that a BellSouth manager worked with you through the weekend adding other services, such as MemoryCall, remote access to call forwarding, call waiting, etc. According to Public Service Commission Rule 25-4.110(2), F.A.C., a service interruption must be in excess of 24 hours before a credit need be issued. In addition, Public Service Commission rules do not require a telephone carrier to pay for an alternate means of communication when telephone service is interrupted.

In regard to the placement of an adapter on your lines without your knowledge, BellSouth stated that during installation a BellSouth technician asked you which personal computers were going to access the ATA or adapter which lets standard personal computer modems talk to the phone system via analog. BellSouth's technician also advised you that since you were planning to purchase ISDN modems for your personal computers, your data technician needed to speak with a BellSouth technician. Thus, according to BellSouth, you were aware of the adaptor.

Finally, in regard to possible credit for your purchase of modems from a vendor other than BellSouth, BellSouth stated that the package price of the equipment you purchased from BellSouth included six digital modems to connect to your equipment. In addition, I asked you and your assistant, Gary Marcelin, several times for a copy of your digital modem invoice, however, you never provided one.

BellSouth has adjusted your account for equipment, ISDN monthly charges, installation back to regular business lines, and an additional line, for a total of $10,338.05. Based on the information and documentation provided, I believe that BellSouth is in compliance with the Public Service Commission's rules with regard to your accounts. Therefore, I am closing your entire complaint.

For your information, BellSouth provided me with a summary of your accounts, and the balance due on each account, as of May 19, 1999. In addition, BellSouth informed me that as of May 19, 1999, you had not made a payment on your current charges since December, 1998. The summary, contained in the chart on the next page, does not include the $5,710.41 owed on disconnected Directory Advertising account 305-Y85-5587-703 and it does not include the $15,097.17 owed on disconnected Directory Advertising account 305-Y87-0912-912.

Summary of ABA's Accounts with BellSouth

Account	Balance Owed	Status of Account	Type of Account
305-374-3131-710	$2,669.27	Open	Regular business line account, as of 5/19/99, no payment has been made since 12/18/99
305-374-0497-361	$1,889.47	Disconnected	ISDN (discussed above)
305-374-0497-618	$1,181.72	Disconnected	Regular business line account open from 6/4/98-8/7/98
305-867-1314-541	$598.97	Disconnected	Regular business line account open from 6/4/98-8/7/98
305-374-0838-923	$283.14	Disconnected	Regular business line account open from 10/9/89-8/27/98
305-374-6404-411	$23.91	Disconnected	Remote Call Forwarding account open from 4/16/92-3/2/98
305-374-6404-777	$35.09	Disconnected	Remote Call Forwarding account open from 8/29/98- 9/4/98

The total amount owed to BellSouth, as of May 19, 1999, on your telephone line accounts is $6,681.57, which consists of $2,669.27 for your open account and $4,012.30 for your disconnected accounts. BellSouth agreed that until this complaint is closed, it would not disconnect your service for non-payment. Since I am closing your complaint, I urge you to contact BellSouth as soon as possible in order to a prevent a service disruption.

If you have any questions, you may reach me at (850) 413-6540.

Sincerely,

Suzanne Ollila

Suzanne Ollila
Economic Analyst

cc: Beverlee S. DeMello, Consumer Affairs
MaryRose Sirianni, BellSouth Telecommunications

BELLSOUTH

No Document Payment Receipt

RF-9343
(11-96)

Area Code	Telephone Number	Customer Code	Check Digit
305	374 · 3131	555	

Billing Name: AGA PROFESSIONAL

Street Address: 1101 BRICKELL AVE

City: MIAMI FL. State: Zip Code: 33231

Please Check One

- [x] Payment $ 343.46
- [ ] Deposit $
- ID Type & Number
- [ ] Advance Payment $

Thank You ...

We Appreciate Your Business!

Your payment will be posted to your BellSouth account within seconds.

*order to save time in the future, please bring your elephone bill.... or you may **Mail Your Payment**.*

Ply 1 - Customer's Copy

Ply 2 - Agency's Copy

BELLSOUTH

No Document Payment Receipt

RF-9343 (11-96)

Area Code	Telephone Number	Customer Code	Check Digit
305	374 · 0838	360	

Billing Name: ABA PROFESSIONAL

Street Address: 1101 BRICKELL AVE

City: MIAMI State: Fl. Zip Code: 33231

Please Check One

- [x] Payment $ 1283.89
- [ ] Deposit $
- ID Type & Number
- [ ] Advance Payment $

Thank You ...

We Appreciate Your Business!

Your payment will be posted to your BellSouth account within seconds.

*In order to save time in the future, please bring your telephone bill.... or you may **Mail Your Payment**.*

SEARS CRL GB 2
IGF PA P 0103 12/08/98 1,283.89 CKM
PAYM 305-374-0838 360 0441

Ply 1 - Customer's Copy

Ply 2 - Agency's Copy

BELLSOUTH

No Document Payment Receipt

RF-9343
(11-96)

Area Code	Telephone Number	Customer Code	Check Digit
305	374·6404	618	

Billing Name: ABA PROFESSIONAL

Street Address: 1101 BRICKELL AVE

City: MIAMI State: FL. Zip Code: 33231

Please Check One

- [x] Payment $ 63.87
- [ ] Deposit $
  ID Type & Number
- [ ] Advance Payment $

Thank You ...

We Appreciate Your Business!

Your payment will be posted to your BellSouth account within seconds.

*In order to save time in the future, please bring your telephone bill.... or you may **Mail Your Payment**.*

Ply 1 - Customer's Copy

Ply 2 - Agency's Copy

BELLSOUTH

RF-9041
(10-95)

Payment Receipt

Thank You...

We Appreciate Your Business!

Your payment will post to your BellSouth account within seconds.

SEARS ADVENTR 2
36F PA P 0047 12/12/98 $144.76 CK
PAYH 305-374-0835 357-0440-E01

H

ISDN BUSINESS SERVICE
CONTRACTUAL ITEMS

Quantity	USOC	Description	Monthly Rate	Nonrecurring Charge
4	LQTTB	ISDN Access	220.00	
8	LQGFX	B Channel Circuit Switched Voice/Data	106.00	
	LQAFX	B Channel CSV/CSD	-0-	
				$724.00 WAIVED

ADDRESS: 801 Brickell Bay Drive Suite 662, Miami, FL 33131

SUBSCRIBER: ABA Professional Association

BY: _____ TITLE: C.E.O.

PRINT NAME: Hanoel Bora

****

Do not fill in below this line

ACCEPTED: _____ 19__ BY: _____

TITLE: _____

&KCS

ATTACHMEN

I

S A L E S / S E R V I C E O R D E R 3 Z 3 0 0 1 :

11-NOV-1998 10:47:39 AM
REQUESTOR BYGPPST
PRINT DISTRIBTION:

SPOOLER

CLOSED CLOSED CLOSED CLOSED CLOSED CLOSED CLOSED CLOSED CLOSED
COMPLETED 09/14/98 COMPLETION ENTERED 09/16/98
****

ORDER TYPE N - NEW SYSTEM

ORDER NUMBER 3Z30012454 ORDER STATUS CP MA CODE CE STATUS DATE 08/28/98
FREEZE DATE 08/04/98

CUSTOMER....: NUMBER 112615
NAME ABA PROFESSIONAL ASSOC
ADDRESS 1101 BRICKELL ROAD #3104
CITY MIAMI STATE FL ZIP 33131-
CONTACT MANUEL LORA/CEO PHONE (305)374-3131

INSTALLATION: NUMBER 112615001
NAME ABA PROFESSIONAL ASSOC
ADDRESS 801 BRICKELL BAY DR., STE 662
CITY MIAMI STATE FL ZIP 33131-
CONTACT MANUEL LORA/CEO PHONE (305)374-3131

SHIPPING....: NAME ABA PROFESSIONAL ASSOC
ADDRESS1 801 BRICKELL BAY DR., STE
ADDRESS2 SUITE 662
CITY MIAMI STATE FL ZIP 33131-
CONTACT MANUEL LORA/CEO PHONE (305)374-3131

AE CODE 3Z300TJ NAM CODE
AGREEMENT NUMBER 97A000264
BASIC SYSTEM CODE 385 PCI CODE
SALE DATE..... 07/31/98
FACILITIES DATE. 07/31/98
RA NUMBER JOB NUMBER
GEO CODE 100250920 REVENUE CODE 2P11

HOLD FLAG N PAYMENT OPTION 018
MOJ DATE..... 08/07/98
ORIGINAL DUE DATE..... 08/11/98
SUBSEQUENT DUE DATE... 09/14/98
AUTHORITY..... BR2P110
CUSTOMER P.O. CONTRACT
LEASE NUMBER 00000-0067628-22001

SUB-TOTAL.....	$	7,213.68
LESS DISCOUNT.....	$	1,792.57
TOTAL PRODUCTS.....	$	5,421.11
PLUS TAX.....	$	0.00
PLUS SHIPPING.....	$	68.00
PLUS EXPEDITE CHGS..	$	0.00
ORDER TOTAL.....	$	5,489.11
LESS ADJUSTMENTS....	$	0.00
LESS PREPAYMENTS....	$	0.00
TOTAL DUE.....	$	5,489.11

IMPLEMENTOR NAME SARA RUIZ/JOINER PHONE (800)925-0010
TECHNICIAN ID ZSS011011373 NAME RAMIREZ IGNACIO (S.T.)

&k^s

SALES/SERVICE ORDER 3Z30012454 SR-1000

I

8-SEP-1998 07:47:26 AM
REQUESTOR BYGPPST
PRINT DISTRIBTION:

FACTA( ) PRINT SEQUENCE
PROD DEL PRINT SEQUENCE

SPOOLER

SouthEast

****
* CUSTOMER *
* NUMBER *
* 112615 *
****

****

ORDER TYPE N - NEW SYSTEM

L

ORDER NUMBER 3Z30012454 ORDER STATUS UE MA CODE CE STATUS DATE 08/28/98
CUSTOMER....: NUMBER 112615 FREEZE DATE 08/04/98
NAME ABA PROFESSIONAL ASSOC
* ADDRESS 1101 BRICKELL ~~[illegible]~~ #310460 WRONG. Add.
CITY MIAMI STATE FL ZIP 33131-
CONTACT MANUEL LORA/CEO PHONE (305)374-3131
INSTALLATION: NUMBER 112615001
NAME ABA PROFESSIONAL ASSOC Tower #4
ADDRESS 801 BRICKELL BAY DR., STE 662
CITY MIAMI STATE FL ZIP 33131-
CONTACT MANUEL LORA/CEO PHONE (305)374-3131
SHIPPING....: NAME ABA PROFESSIONAL ASSOC
ADDRESS1 801 BRICKELL BAY DR., STE
ADDRESS2 SUITE 662
CITY MIAMI STATE FL ZIP 33131-
CONTACT MANUEL LORA/CEO PHONE (305)374-3131

AE CODE 3Z300TJ NAM CODE
AGREEMENT NUMBER 97A000264
BASIC SYSTEM CODE 385 PCI CODE
SALE DATE....... 07/31/98
FACILITIES DATE. 07/31/98
RA NUMBER JOB NUMBER
GEO CODE 100250920 REVENUE CODE 2P11

HOLD FLAG N PAYMENT OPTION 018
MOJ DATE.............. 08/07/98
ORIGINAL DUE DATE..... 08/11/98
SUBSEQUENT DUE DATE... 09/14/98
AUTHORITY............. BR2P110
CUSTOMER P.O. CONTRACT
LEASE NUMBER 00000-0067628-22001

SUB-TOTAL...........	$	7,877.68
LESS DISCOUNT.......	$	1,957.58
TOTAL PRODUCTS......	$	5,920.10
PLUS TAX............	$	0.00
PLUS SHIPPING.......	$	68.00
PLUS EXPEDITE CHGS..	$	0.00
ORDER TOTAL.........	$	5,988.10
LESS ADJUSTMENTS....	$	0.00
LESS PREPAYMENTS....	$	0.00
TOTAL DUE...........	$	5,988.10

5489.11 # 916 ~~[illegible]~~
AMK 23

IMPLEMENTOR NAME SARA RUIZ/JOINER PHONE (800)925-0010
TECHNICIAN ID ZSS011011373 NAME RAMIREZ IGNACIO

PLEASE FAX BACK
TO 597-5979
SIGN LASTPAGE ONLY

NOTICE - NOT TO BE DISCLOSED OUTSIDE BELLSOUTH EXCEPT UNDER WRITTEN AGREEMENT

BELLSOUTH

BellSouth Business Systems, Inc.
Suite 1249
8451 N. Federal Highway
Fort Lauderdale, Florida 33308-1493

February 9,1999

ABA Professional Assoc.
% Manuel Lora
801 Brickell Bay Dr.
Miami, Fl. 33131

RE: 305 374-0497

Dear Mr. Lora:

Per our conversation today, this letter is confirmation that BellSouth has credited your accounts for the installation and monthly service of the ISDN services. In addition, the installation charges associated with the re-connection of analog business lines were also credited.

As of today, no further credits are due.

If you have any questions regarding this matter please call me at 954 958-6222.

Sincerely,

Elena Powanda
Project Manager

J1

September 16, 1998

A; B, A Travel Group
801 Brickell Bay Dr.
Suite 662
Miami, Fl. 33131

Dear Mr. Lora:

Per our conversation on Tuesday, September 15, 1998, the following features are not tariffed for ISDN service:

Call Waiting
Flexible Call Forwarding
Remote Access to Call Forwarding
Fax Overflow Service

I have processed a Special Service Arrangement Request Form, document SF98-5156-00, to request the feasibility and pricing of these features. This process will take approximately 2 weeks. I will follow up with a contract when the Agreement has been processed.

If you require any additional information, please fax me a request at 1-800-330-5170.

Sincerely,

Elena Powanda
Project Manager II

A42. INTEGRATED SERVICES DIGITAL NETWORK (ISDN)

A42.1 ISDN - Business Service (IBS) (Cont'd)

A42.1.4 Rates and Charges (Cont'd)

F. Termination Charges

IBS lines placed in service under Rate Stability Plans after the effective date of this tariff will incur a Termination charge at the date of termination if the customer terminates or disconnects the service prior to fulfilling the period of the Rate Stability Plan. Termination Charges will not apply for IBS lines upgrading to another service offered by the Company with a contract period equal to or longer than the existing ISDN contract.

1. Termination Charge for 24-59 Mos. Rate Stability Plan if disconnected within:

	Termination Charges	USOC
(a) 1- 12 Months [1]	$300.00	LFEB2
(b) 13-23 months	200.00	LFEB3
(c) 24-58 months	100.00	LFEB4

2. Termination Charge for 60-120 Mos. Rate Stability Plan if disconnected within:

(a) 1-23 months	300.00	LFEB5
(b) 24-59 months	200.00	LFEB6
(c) 60-119 months	100.00	LFEB7

A42.1.5 Optional Features

Customers are required to subscribe to ISDN - Business Service (IBS) before ordering these features. Calling/Called Number Delivery and Call Hold are provided with this service. Features are available to increase the capability of IBS and may be subscribed to on an as needed basis. Availability of features are limited to where facilities permit and may be limited by central office type and switch load.

Note 1: This Termination Charge also applies at the date of termination if a customer terminates or disconnects prior to fulfilling the three months minimum service period.

Material appearing on this page previously appeared on page(s) 7 of this section.

ATTACHMENT K

BELLSOUTH Mobility

5201 Congress Ave, Ste A
P.O. Box 3050
Boca Raton, FL 33431-0950

Mobile Number: 954-592-2
Total Amount Due: 701
Due Before: 09/21

*Please remit past due balance immediately

AMOUNT PAID: $

☐ Check here if address change: complete reverse side

Make check payable in U.S. currency drawn against a U.S. bank to:

BELLSOUTH Mobility

PO BOX 530013
ATLANTA GA 30353-00

AB 01 031164 22726 B 177 A

MARINA T CONTRERAS
%ABA PROFESSIONAL ASSOC
1101 BRICKELL AVE
P.O. BOX 310460
MIAMI FL 33231-0460

8 00020000000 95459228380 00000070193 5

Please Return TOP Portion With Payment.

BELLSOUTH Mobility

5201 Congress Ave, Ste A
P.O. Box 3050
Boca Raton, FL 33431-0950

For Customer Use		
Amount Paid	Date Paid	Check

For additional information on BellSouth and i array of products and services, please visit us Internet address at www.bellsouth.com.

MARINA T CONTRERAS
Bill Period Ending: 08/28/98
Mobile Number: 954-592-2838

Billing inquiries, call Customer Service 24 hours a day 930-1101

Total Past Due (Remit Immediately)	Current Monthly Charges	Other Credits & Charges	Total Amount Due
364.70	335.57	1.66	701.93

At this time, your account is reflecting a past due balance and is subject to interruption without further notification. We realize this could be an oversight on your part, so we would appreciate you taking the time to remit this balance immediately.

IBS V604 (1/97)

BELLSOUTH

BellSouth
Communication Systems
5555 Windward Parkway, Suite B
Alpharetta, Georgia 30201-3595

L

Manuel Lora
ABA Professional Association Inc.
1101 Brickell Ave.
Miami, FL 33131

Dear Mr. Lora:

We at BellSouth Communications Systems apologize for all the inconvenience caused during the process of replacing your analog lines to digital and the installation of the Norstar System. We know what it means to an organization like yours to be two days without communications. We have done everything in our power to solve the problem and have you up and running. Again we apologize for the inconvenience to you and your customers.

Sincerely,

Sara Ruiz
Account Executive

BELLSOUTH

L

BellSouth Co
5555 Wind
Alpha

June 10, 1998
Manuel Lara.
ABA
905 S. Bayshore Drive
S1625, 1626
Miami, FL 33131

Dear Mr. Lara:

Thank you for your interest in the Norstar telephone system from BellSouth Communication Systems. BellSouth has the resources necessary to provide you with the best equipment and service available; just ask one of our 10,000 BellSouth Norstar customers.

The BellSouth Norstar system is fully digital, cost efficient, and its ease of use, feature rich sets and reliability are unsurpassed. - With nearly 6 million telephone sets in over 70 countries, ***Norstar is the #1 telephone system in the world.*** And that's because Norstar not only meets the needs of business; it anticipates them.

Enclosed is a proposal for a new BellSouth Norstar telephone system. The proposal outlines the equipment summary, which includes a one year warranty, and installation details. Should you have any questions about the enclosed material, please feel free to contact me at 800-782-7258.

Sincerely,

Sara Ruiz

Sara Ruiz
Account Executive

Attachment M

DOWN 9,027.98 -42.49 DOW 30 INDUSTRIALS	S&P 500 STOCK INDEX	1,181.38 -6.32
	NASDAQ STOCK INDEX	2,034.75 -6.89
	BONDS U.S. 30-YEAR	4.99% -.04%
	HERALD BLOOMBERG LOCAL INDEX	116.65 -.69

WEDNESDAY, DECEMBER 9, 1998

Telephone competition growing at slow pace

By DAVID POPPE
Herald Business Writer

Competition for local telephone customers heated up slightly this year, but BellSouth and other monopolies still control more than 98 percent of all local telephone lines in Florida, the Public Service Commission reports.

In its annual report on the telephone industry, the Florida PSC found 51 "alternative" companies now serve 194,000 business and residential phone lines in the state.

While that represents just 1.8 percent of total Florida phone lines, it is more than triple the level of a year ago, when there were 22 alternative companies serving 56,000 lines statewide.

Monopolies continue to dominate in Florida

Hyperion Communications, [illegible] competition for local phone service in Palm City, [illegible] with about 50 [illegible] BellSouth service.

The report, however, emphasizes [illegible] competition is starting to grow, nearly three years after Congress deregulated the local telephone [illegible] industry.

"It should be noted that in spite of this modest growth in absolute terms, [alternative] residential lines and business lines have tripled" the PSC reports. "The overall increase . . . does indicate that [new companies] are making [illegible] efforts to enter the Florida telecommunications market."

BellSouth, GTE and Sprint-Florida, which each control sections of Florida, serve 10.6 million lines statewide.

Among businesses, alternative companies control 4.3 percent of all local lines. But in the less-lucrative residential market, the alternative companies control 0.7 percent of lines.

Worse, many residential customers who use alternative local providers do so because they've been denied service from the incumbent carrier for nonpayment of bills or bad credit history. One company

The report gives a variety of reasons for the slow pace of competition. One is that BellSouth owns the phone lines that connect to South Florida homes and businesses. So even when alternative companies install their own equipment to direct phone traffic, they still must buy access to the Bell lines for the actual connection to customers. Alternative companies complain about the rates the PSC allows near-monopolies to charge for access and about poor service and technical difficulties they suffer at the hands of monopolies.

MCI, in fact, won a PSC arbitration complaint against BellSouth earlier this year over the quality of

PLEASE SEE PHONES, 2C

competition increases at slow pace

PIONEER FROM 1C

service BellSouth provides MCI's local phone unit.

However, BellSouth and other telecommunications companies also [illegible] many complaints because their service is generally good. [illegible] Florida Public Service Commission, the PSC notes that it received just one "justified" complaint for every 25,000 BellSouth lines over the past year.

"I think that aside from the [illegible] of the market, I tend to look [illegible] clear and [illegible] fully satisfied [illegible] almost [illegible] satisfied," said Spendlove, BellSouth spokesman. In Florida, for example, the [illegible] estimates between [illegible] percent and 10 percent of all business lines served by alternative carriers [illegible] sign competition is growing.

Canton acknowledged that [illegible] addition for residential [illegible] almost [illegible] but he said the PSC is responsible. The [illegible] BellSouth's rate for basic local phone service at $16.65 a month in South Florida, which is well below [illegible] in recent legislators set rates for business customers artificially high. BellSouth also earns big profits selling extras such as call waiting and caller ID, and reaps subsidies from long-distance companies for connecting their calls.

Because business rates are inflated and residential rates are artificially low, new companies focus on business customers, Canton said.

"If you are serious about increasing competition in the residential market, there has to be some modification" of rates.

Competitors, however, find fault with BellSouth. MCI complains BellSouth makes it difficult for customers to switch phone companies simply by dragging its feet processing orders.

"[illegible] they find an error in your order they'll [illegible] and they may or may not tell you what it is," says Joe Palaska, an MCI spokesman. Worse, he says, if an order contains more than one error, BellSouth often identifies "the error one at a time, forcing MCI to continually resubmit orders. The result is that customers can wait weeks for phone service, discouraging them from leaving BellSouth.

"Our experience has been that those systems aren't in place and they are really crucial," Palaska says.

Federal law requires BellSouth to completely open [illegible] before it can [illegible] long distance [illegible] vices such as [illegible] access. Canton [illegible] BellSouth hopes to enter [illegible] soon.

4

ABA PROFESSIONAL ASSOCIATION INC.

801 BRICKELL BAY DRIVE
TOWER-4 SUITE #662 MIAMI FL, 33131

AND MOST BELL SOUTH CLIENTS (CONNIE GRUEN COMMENTS ON 12/98) THEY HAD PLACED ADAPTERS ON (374-0497) TO CONVERT ISDN FAX LINES TO ANALOGS. AFTER GIVING BELL SOUTH CONSIDERABLE AND AMPLE TIME TO RECTIFY AND CORRECT PROBLEMS (SEE LETTERS FROM ELENA POWANDA 2ETTERS)

D) BELL SOUTH THEN OPTED TO PLAY HARD BALL AND GAVE US CONDITIONAL AND LIMITED LENGTH OF TIME TO BUY AND REPLACED EQUIPMENT WHICH THEY WERE REMOVING FROM OUR PREMISES. (SEE LETTERS FROM CONNIE PAGE REF LARRY ANTONUCCI)

E) THIS ACTION TOOK PLACE EVEN THOUGH WE VOLUNTEER TO KEEP EQUIPMENT IF THEY PROVIDED AN ANALOG MODULE CARD ($125.00) WHICH WAS CHEAPER THAN REMOVING EQUIPMENT. THEY REFUSED.

F) THEY AGREED SERVICE WAS NOT COMPATIBLE NOR WHAT THEY HAD ORIGINALLY OFFERED THEY AGREED NOT TO CHARGE FOR SERVICE AT ALL SEE ATTACHED LETTER. (J ELENA POWANDA)

G) DURING THE TIME OF THE SERVICE WHICH THEY AGREED TO CREDIT THOSE SPECIFICS ACCOUNTS WE MADE PAYMENTS WHICH WE ARE ASKING TO BE CREDIT TO OUR NEW ACCOUNTS. SAME NUMBERS DIFFERENT CODES (ISDN & ANALOGS) G# SEE ATTACHED RECEIPTS.

H) BELL SOUTH REFUSES TO ACCEPT RESPONSIBILITY FOR ERRORS, NEGLECTS, DECEIVING AND OMISSIONS THEY CONTINUE TO PLAY HARD BALL. THEY HAVE PRESENTED IN A DECEIVING FASHION TO THE PSC THE ACTIONS. THEY SAID THEY HAD GIVEN CREDIT FOR THE INSTALLATION OF THE ISDN. THEY HAD TO AS PER OUR AGREEMENT (SEE ATTACHMENT # H)

I) THEY CLAIMS THEY GAVE CREDIT FOR THE EQUIPMENT. THEY HAD TO WE REFUSED TO SIGNED RELEASES EVERY TIME (SEE ATTACHMENT #I)

J) THEY CLAIM THEY PROVIDED SOME CREDIT FOR THE SERVICE, THEY HAVE TO CREDIT THE ACCOUNT IN FULL (SEE ATTACHMENT # LETTER FROM ELENA POWANDA)

J-1) THEY CLAIM THEY WAITED FOR US, IT WAS THE OTHER WAY AROUND SEE LETTER FROM ELENA POWANDA 1, 2 IN ATTACHMENT #C

J-2) WHAT IS MORE SIGNIFICANT IS THAT THEY NEVER INFORMED ABA PROFESSIONAL REPRESENTATIVES THAT ON LINE 374-0497 THEY WERE PLACING

ABA PROFESSIONAL ASSOCIATION INC.

801 BRICKELL BAY DRIVE
TOWER-4 SUITE #662 MIAMI FL, 33131

AN ADAPTER CONVERTING THE LINE FROM ISDN TO ANALOG HENCE, THERE WAS NEVER A NEED FOR SAID ISDN SERVICE. YET THEY KNEW THAT ABA HAD INVESTED SERIOUS AMOUNTS OF MONEY WITH OTHER VENDORS FOR SAID ISDN EQUIPMENT. CONFIRMED BY TECHNICIAN IGNACIO RAMIREZ AND SUPERVISOR LARRY ANTONUCCI. AND COORDINATOR CONNIE GRUEN (

K) ADDITIONALLY WE HAD THE NUMBERS TRANSFER TO A CELLULAR NUMBER DURING THE DAYS WHICH WE HAD NO SERVICE. BELL SOUTH HAS NEVER VOLUNTEER TO PAY FOR THOSE CHARGES WHICH WERE CAUSED BY THEIR NEGLIGENCE, EQUIPMENT, MISTAKES, ERRORS ETC. (ATTACHMENT #K)

WE WANTS ALL CREDITS FOR PAYMENTS MADE DURING THE TIME FRAME, PLUS ANY OTHER COMPENSATIONS WHICH WE ARE ENTITLED TO LEGALLY, FAIR AND JUST.

L) COPY OF LETTER FROM BELL SOUTH SALES REPRESENTATIVE SARAH RUIZ EXPLAINING SYSTEM IS FULLY DIGITAL. (NOT SO)

M) COPY OF NEWSPAPER ARTICLE FROM 12/1998 ON BELL SOUTH TACTICS COMPLAIN

N) THERE IS A DEPOSIT OF BELL SOUTH EQUIPMENT WHICH IT HAS NOT BEEN RETURNED AS OF YET.

SINCERELY YOURS,

GARY MARCELIN

ATTACHMENT P.09

A

With BellSouth's colorful army of business solutions, you can always be there for your customer's needs

Save up to $1110 — ISDN PRI Voice/Data (Contracts of 24 Months)
- Free installation of ISDN PRI

Save up to $251 — ISDN BRI (Contracts of 24 Months)
- Free installation of ISDN BRI

Save up to $2225 — Frame Relay (Contracts of 24 + Months)
- Free installation of Frame Relay

Save up to $1400 — Channelized Megalink* (Contracts of 24 + Months)
- Free installation of Megalink* Channel Service

TO: Valued CSR / ABA Prof Assn
FAX #: 3053740497
Fax Overflow #: 3056313979

You should receive 9 pages including this cover sheet.

This fax cover sheet is provided to subscribers of BellSouth Business Fax Services Fax Overflow service. It acknowledges that the following pages were delayed in transmission to you because your fax machine was busy, out-of-paper, temporarily out-of-order, or shut off.

Thank you for using BellSouth Business Fax Services Fax Overflow service. If you have questions or need assistance, please call our Customer Service department at 1-800-986-9480.

FAX ID: 41165721
Received: 7/22/98 02:35 PM
Printed: 7/22/98 08:45 PM

BellSouth.net Packaged Fractional Frame Relay Access (Contracts of 24 Months)

Save up to $1150

- Up to 1.544 Mbps
- Waiver of BellSouth.net service installation charges
- Contract terms of 24 months: first 4 months monthly recurring charges for BellSouth.net service waived
- Contract terms of 36 months: first 6 months monthly recurring charges for BellSouth.net service waived

BellSouth.net ISDN 128K LAN Dedicated Internet Access w/Shared Web Hosting

Save up to $750

- $200 rebate on BellSouth.net ISDN 128K LAN Internet Access w/Shared Web Hosting (when purchased together)
- Netopia 675 ISDN Router available at up to $350 discount off retail (when purchased with ISDN 128K LAN Access Service)
- $50 Rebate when Web Hosting purchased separately

Call your Account Representative or 1-800-338-6500

*Service requires ISDN service in operation

Offer good through 9/30/98
Services Available Only Where Facilities Permit

Monthly service charges and non recurring service order charges will apply
Applicable tariffs outline redemption, terms, and conditions apply

BELLSOUTH

ABA PROFSNL. ASSOC
Account Number: 305 374-0497 618 0441
Date: Dec 24, 1998

****
* SEE IMPORTANT NOTICE ENCLOSED *
****

B

***** PLEASE FOLD THAT HERE AND RETURN THIS PORTION WITH YOUR PAYMENT. *****

Please make check payable to BellSouth in U.S. funds.

305 374-0497 618 0441
Dec 24, 1998
MF 801 E000806

TOTAL AMOUNT DUE	AMOUNT PAID
$1,241.68	

☐ Check here if correspondence included.

#000806

ABA PROFSNL ASSOC
801 BRICKELL BAY DR
SUITE 662
MIA FL 33131-2937

P.O. BOX 33009
CHARLOTTE NC
28243-0001

30593740497618044999990201091030000000000012416800001241 68

BELLSOUTH

ABA PROFSNL ASSOC
Account Number: 305 374-0838 559 0448
Date: Dec 24, 1998

****
* SEE IMPORTANT NOTICE ENCLOSED *
****

***** PLEASE FOLD, TEAR HERE AND RETURN THIS PORTION WITH YOUR PAYMENT. *****

Please make check payable to BellSouth in U.S. funds.

305 374-0838 559 0448
Dec 24, 1998
MT 801 E000808

TOTAL AMOUNT DUE	AMOUNT PAID
$196.59	

☐ Check here if correspondence included.

E000808

ABA PROFSNL ASSOC
801 BRICKELL BAY DR
SUIT 662
MIA FL 33131-2937

P.O. BOX 33009
CHARLOTTE NC
28243-0001

30593740838559044999990201051030000000000001965900000019659

BELLSOUTH

A*B*A PROFESSIONAL ASSOCIATION
Account Number: 305 374-6404 618 0448
Bill Period Date: Sep 14, 1998

Thank you for choosing BellSouth. We sincerely appreciate your business.

Summary of Charges

	Amount
Previous Charges	
Amount of Last Bill	74.01
Less Payments	.00
Balance	74.01
Current Charges	
BellSouth	
Other Charges and Credits	8.09CREDIT
Taxes	2.05CREDIT
Total Current Charges for BellSouth Companies	10.14CREDIT
Total Current Charges Due Before Oct 2	10.14CREDIT
Total Amount Due	63.87

Important Notice(s)

Please note: This is your final bill. See message following the BellSouth Current Charges.

Helpful Numbers

BellSouth Telecommunications, Inc. (BST)

NOTE: Numbers for other companies are listed on their bill pages.

Billing Questions or to Place an Order:	
If calling from within the Florida BellSouth service area	305 780-2800
If calling from outside Florida or outside the Florida BellSouth service area	1-800-753-8172
Repair:	
If calling from within the Florida BellSouth service area	305 780-2222

(continued on page 2) ▶

***** PLEASE FOLD, TEAR HERE AND RETURN THIS PORTION WITH YOUR PAYMENT. *****

Please make check payable to BellSouth in U.S. funds.

[redacted]	[redacted]	[redacted]	[redacted]
Oct 2	$74.01	$63.87	

305 374-6404 618 0448
Sep 14, 1998
AM 1014 FXX 801 A005482

☐ Check here if correspondence included.

P.O. BOX 70807
CHARLOTTE NC
28272-0807

$005482 1 AB 0.26
A*B*A PROFESSIONAL
ASSOCIATION
1101 BRICKELL AV
BOX 310460
MIA FL 33231-0460

305937464046180449999812010450200000000000007401000006387

BELLSOUTH

ABA PROFSNL ASSOC
Account Number: 305 374-0838 360 0441
Bill Period Date: Dec 14, 1998
CKT: 70.1850.512986..SB

Thank you for choosing BellSouth. We sincerely appreciate your business.

Summary of Charges

	Amount
Previous Charges	
Amount of Last Bill	4,499.85
Less Payments	1,783.89CREDIT
Balance - Thank You for Your Payment	2,715.96
Current Charges	
BellSouth	
Monthly Service Charges	300.35
Local Usage	36.16
Other Charges and Credits	226.83
Itemized Calls	1.20
Taxes	86.12
Total Current Charges for BellSouth Companies	650.66
Charges for Other Companies	838.00
Total Current Charges Due Before Jan 5	1,488.66
Total Amount Due (See Messages for Charges Under Investigation)	4,204.62

Important Notice(s)

Late Charge Reminder: A 1.5% Late Payment Charge will apply to any unpaid balance as of Jan 15.

Nonpayment of Regulated Charges may result in discontinuance of service. Failure to pay unregulated and certain other charges, all of which are identified by ** on your bill, will not result in an interruption of local service. The amount of Regulated Charges may be obtained by calling 1 800 858-9413.

(continued on page 2) ▶

***** PLEASE FOLD, TEAR HERE AND RETURN THIS PORTION WITH YOUR PAYMENT. *****

Please make check payable to BellSouth in U.S. funds.

CURRENT CHARGES DUE BEFORE	PAST DUE AMOUNT	TOTAL AMOUNT DUE	AMOUNT PAID
Jan 5	$2,715.96	$4,204.62	

305 374-0838 360 0441
Dec 14, 1998
AV 0112 B01 A001493

☐ Check here if correspondence included.

0001493 2 AV 0.46

P.O. BOX 70807
CHARLOTTE NC
28272-0807

ABA PROFSNL ASSOC
801 BRICKELL BAY DR
SUIT 662
MIA FL 33131-2937

30593740838360044011280201084110000000000027159600004204 62

6KOS

S A L E S / S E R V I C E O R D E R 3 Z 3 0 0 1 2 4 5 4

.1-NOV-1998 10:47:39 AM
'EQUESTOR BYCPPST
'RINT DISTRIBTION:

SPOOLER

****
* CUSTOMER *
* NUMBER *
* 112615 *
****

'LOSED CLOSED CLOSED CLOSED CLOSED CLOSED CLOSED CLOSED CLOSED CLOSED CLOSED
OMPLETED 09/14/98 COMPLETION ENTERED 09/16/98
****

ORDER TYPE N - NEW SYSTEM

ORDER NUMBER 3Z30012454 ORDER STATUS CP MA CODE CE STATUS DATE 08/28/98
CUSTOMER....: NUMBER 112615 FREEZE DATE 08/04/98
NAME ABA PROFESSIONAL ASSOC
ADDRESS 1101 BRICKELL ROAD #3104
CITY MIAMI STATE FL ZIP 33131-
CONTACT MANUEL LORA/CEO PHONE (305)374-3131
INSTALLATION: NUMBER 112615001
NAME ABA PROFESSIONAL ASSOC
ADDRESS 801 BRICKELL BAY DR., STE 662
CITY MIAMI STATE FL ZIP 33131-
CONTACT MANUEL LORA/CEO PHONE (305)374-3131
SHIPPING....: NAME ABA PROFESSIONAL ASSOC
ADDRESS1 801 BRICKELL BAY DR., STE
ADDRESS2 SUITE 662
CITY MIAMI STATE FL ZIP 33131-
CONTACT MANUEL LORA/CEO PHONE (305)374-3131

AE CODE 3Z300TJ NAM CODE
AGREEMENT NUMBER 97A000264
BASIC SYSTEM CODE 385 PCI CODE
SALE DATE..... 07/31/98
FACILITIES DATE. 07/31/98
RA NUMBER JOB NUMBER
GEO CODE 100250920 REVENUE CODE 2P11

HOLD FLAG N PAYMENT OPTION 018
MOJ DATE..... 08/07/98
ORIGINAL DUE DATE..... 08/11/98
SUBSEQUENT DUE DATE... 09/14/98
AUTHORITY..... BR2P110
CUSTOMER P.O. CONTRACT
LEASE NUMBER 00000-0067628-22001

SUB-TOTAL.....	$	7,213.68
LESS DISCOUNT.....	$	1,792.57
TOTAL PRODUCTS.....	$	5,421.11
PLUS TAX.....	$	0.00
PLUS SHIPPING.....	$	68.00
PLUS EXPEDITE CHGS..	$	0.00
ORDER TOTAL.....	$	5,489.11
LESS ADJUSTMENTS....	$	0.00
LESS PREPAYMENTS....	$	0.00
TOTAL DUE.....	$	5,489.11

IMPLEMENTOR NAME SARA RUIZ/JOINER PHONE (800)925-0010
TECHNICIAN ID ZSS011011373 NAME RAMIREZ IGNACIO (S.T.)

ATTACHMEN

C

37

September 16, 1998

A; B, A Travel Group
801 Brickell Bay Dr.
Suite 662
Miami, Fl. 33131

Dear Mr. Lora:

Per our conversation on Tuesday, September 15, 1998, the following features are not tariffed for ISDN service:

Call Waiting
Flexible Call Forwarding
Remote Access to Call Forwarding
Fax Overflow Service

I have processed a Special Service Arrangement Request Form, document SF98-5156-00, to request the feasibility and pricing of these features. This process will take approximately 2 weeks. I will follow up with a contract when the Agreement has been processed.

If you require any additional information, please fax me a request at 1-800-330-5170.

Sincerely,

Elena Powanda
Project Manager II

ATTACHMEN

D

BellSouth
Communication Systems
5555 Windward Parkway, Suite B
Alpharetta, Georgia 30201-3888

December 2, 1998

Mr. Manuel Lora
ABA Professional Association, Inc.
801 Brickell Bay Drive
Miami, FL 33131

Dear Mr. Lora:

After speaking to Larry Antonucci, he confirmed that there would not be any charges made to your company for installation or de-installation of the equipment. We will adjust the equipment bill to a zero balance. We will give you until the 23rd of December to have another vendor install equipment for you. Once you have a date that your new equipment will be installed, please contact Larry Antonucci to set up a time for him to come pick up our equipment. His number is (305) 597-5765.

In regards to your ISDN lines, vendor services has agreed to change your lines back to analog with no charge for the change. You are still required to pay your monthly service bills. With analog lines, you can have your old features, such as call waiting and remote call forwarding. We would need to know what date you would want your lines changed back as soon as possible so we do not miss your timeframe.

Please send me your response as soon as you get a chance.

Sincerely,

Connie Page

Connie Page
Sales Manager
BellSouth Sales Center

E

BellSouth
Communication Systems
5555 Windward Parkway, Suite B
Alpharetta, Georgia 30201-3898

December 1, 1998

Mr. Manuel Lora
ABA Professional Association, Inc.
801 Brickell Bay Drive
Miami, FL 33131

Dear Mr. Lora,

In reply to your last letter dated November 25, 1998, we can not give you the analog card for free. We have offered to take the equipment out for free and let you choose another vendor that can meet your needs. We can not give you any guarantees on when your requested features will be available on ISDN nor when the equipment will be compatible.

We are willing to convert your lines back to analog, but you must pay your monthly service bills. You have been getting service that you are obligated to pay for.

You have made it very clear that the network features are imperative to your business. For you to have these features, the best solution is for the lines to be converted back to analog and for you to either choose different equipment or for you to choose to add the analog card onto your lease.

Please let me know what you decide on as soon as possible and we will do what we need to do as quickly as we can.

Sincerely,

Connie Page

Connie Page
Sales Manager
BellSouth Sales Center

BELLSOUTH

BellSouth Business Systems, Inc.
Suite 1249
8451 N. Federal Highway
Fort Lauderdale, Florida 33308-1493

F

February 9,1999

ABA Professional Assoc.
% Manuel Lora
801 Brickell Bay Dr.
Miami, Fl. 33131

RE: 305 374-0497

Dear Mr. Lora:

Per our conversation today, this letter is confirmation that BellSouth has credited your accounts for the installation and monthly service of the ISDN services. In addition, the installation charges associated with the re-connection of analog business lines were also credited.

As of today, no further credits are due.

If you have any questions regarding this matter please call me at 954 958-6222.

Sincerely,

Elena Powanda
Project Manager

F

BellSouth
Communication Systems
5555 Windward Parkway, Suite B
Alpharetta, Georgia 30201-3895

November 16, 1998

Mr. Manuel Lora
ABA Professional Association, Inc.
1101 Brickell Avenue
Miami, FL 33131

Dear Mr. Lora:

Thank you for your continued willingness and participation in our attempts to resolve your outstanding issues. Our goal has been to satisfy your needs as well as keep you a BellSouth Communication Systems Norstar customer. Unfortunately, it appears we will not be able to do so with our Norstar system. Therefore, we would like to help you make provisions to choose another vendor. Upon choosing another equipment vendor, we can have your network re-installed to its prior state without charge. (although monthly recurring charges will apply) Future ISDN enhancements cannot be predicted, so no guarantees can be given regarding charges of future ISDN installations. Larry Antonucci will work with you to remove the existing Norstar system within the next month to supply as smooth a transition as possible. There will be no charge for this removal.

We apologize for the inconvenience to your business, but our intent is to make it as easy as possible to replace the Norstar system with a system that will satisfy your needs best.

Sincerely,

Connie Page

Connie Page
Sales Manager
BellSouth Sales Center

(1) ALL 5 RECEIPTS

No Document Payment Receipt

RF-9343
(11-96)

Customer Code	Check Digit
38	

/ GROUP.

BY A: #668

City: Miami State: FL Zip Code: 33131

Please Check One

- [ ] Payment $ 500.00
- [ ] Deposit $
- ID Type & Number: 201 374 0838
- [ ] Advance Payment $

Today

Thank You ...

We Appreciate Your Business!

Your payment will be posted to your BellSouth account within seconds.

*In order to save time in the future, please bring your telephone bill.... or you may **Mail Your Payment**.*

SEARS AMENTH 2
36F FA P 042 12/01/98 $500.00 CK
AYM 305-374-0838-760 0441

Ply 1 - Customer's Copy

Ply 2 - Agency's Copy

6/23/99 4pm (until 4:30) LORA called

- received letter
- signed green card
- called BellSouth business office to arrange payment(?) before he called me
- still had a problem w/ installation credit - couldn't make him understand initial free, return to ANALOG had charge BST waived it.
- ADAPTOR - said it had to do with fax line which I didn't specify. Explained he was inconsistent in phrasing. Asked how would BellSouth know fax line? He couldn't answer
- very upset about directory advertising charges. Explained I let him know as a courtesy. He said those aren't his accounts. I explained that if they aren't, he needs to speak w/ BellSouth.
- wanted to know why I was emphasizing the money - not meant to be offensive
- said this wasn't meant personally but that if BellSouth said someone should jump off the bridge I would have put that in the letter. I told him I found it offensive & that I would not talk to him if he was offensive. ~~He con~~ I told him if he wanted to talk to me I would be happy to talk to him if he wasn't offensive. I told him to have a nice day & hung up.
- told him earlier I worked hard & spent a lot of time on his complaint & based my decision on documentation both he & BellSouth provided

ABA PROFESSIONAL ASSOCIATION INC.

801 BRICKELL BAY DRIVE
TOWER-4 SUITE #662 MIAMI FL, 33131

hone 1-800-222-4373 USA & Canada
1-800-344-8211 From The Caribbean
800-122-06 From Venezuela
0130-814747 From Germany
046-059416 From Switzerland

FAX 1-800-442-0497 From USA, Canada, & Caribbean ELSEWHERE 305-374-0497
LOCAL NUMBERS 305- 374-3131, 374-3162, 374-6404 374-0838,

E-MAIL ABAHERE@WORLDNET.ATT.NET

PUBLIC SERVICE COMMISSION
COMMUNICATIONS DIVISION
C/O SUE OLLILA
2540 SHUMARD OAK BLVD
TALLAHASSEE FL 32399

VOICE 1-850-413-6540
FAX 1-850-413-6541
FAX 1-800-511-0809

COMPLAINT # 237627R CONTINUATION.

DEAR MS : OLLILA I HAVE NOT HEARD FROM YOU FOR SOME TIME. I CAN ONLY ASSUME YOU HAVE BEEN VERY BUSY. USUALLY I CALL YOU BUT I HAVE ALSO BEEN VERY BUSY WITH MY SON WHOM WAS DIAGNOSED WITH DIABETES.

AS YOU MIGHT KNOW 160, 000 DIED LAST YEAR FROM THIS AWFUL DISEASE WHICH NO ONE KNOWS HOW CHILDREN GET IT.

I HAVE ADDED AGAIN TO THIS LETTER THE TWO ITEM LAST REQUESTED WHICH WERE SENT ON 5/18/99 WHICH WAS ABOUT THE LAST TIME WE SPOKE.

J-2) WHAT IS MORE SIGNIFICANT IS THAT THEY NEVER INFORMED ABA PROFESSIONAL REPRESENTATIVES THAT ON LINE 374-0497 THEY WERE PLACING AN ADAPTER CONVERTING THE LINE FROM ISDN TO ANALOG HENCE, THERE WAS NEVER A NEED FOR SAID ISDN SERVICE. YET THEY KNEW THAT ABA HAD INVESTED SERIOUS AMOUNTS OF MONEY WITH OTHER VENDORS FOR SAID ISDN

ABA PROFESSIONAL ASSOCIATION INC.

801 BRICKELL BAY DRIVE
TOWER-4 SUITE #662 MIAMI FL, 33131

EQUIPMENT. CONFIRMED BY TECHNICIAN IGNACIO RAMIREZ AND SUPERVISOR LARRY ANTONUCCI & COORDINATOR CONNIE GRUEN (SEE ATTACHED INVOICE FROM SOUTH RIVER)

N) THERE IS A DEPOSIT OF BELL SOUTH EQUIPMENT WHICH IT HAS NOT BEEN REFUNDED AS OF YET. (SEE ATTACHED BSFS LETTER # 6762822-001 $ 287.90)

SINCERELY YOURS,

MANUEL LORA .

BSFS EQUIPMENT LEASING
Invoice

LESSEE NAME & ADDRESS	LEASE AGREEMENT NO.
ABA PROFESSIONAL ASSOCIATION, INC.	6762822-001

This is your **Invoice** for the deposit required to be submitted with the Lease documents. The deposit will be applied as indicated below:

Deposit to be applied toward payment of the first month's rent*	$	287.90
Deposit to be applied toward payment for first and last month's rent	$	
Deposit to be held as security	$	
Other	$	
Less Deposit Amount Previously Received	$	
Total Amount Due	$	287.90

*The amount of rent has been established based upon the estimate of the total price as set forth in the Lease Agreement. The amount of rent does not include taxes, etc. Additional adjustments, if any, will be included in subsequent invoices.

Please return your payment with the Lease documents to the remittance address shown below.

Remit to: BSFS EQUIPMENT LEASING
501 Corporate Centre Drive, Suite 600
Franklin, Tennessee 37067

63-660 1/670

7/31 19 98

PAY TO THE ORDER OF BSES $ 287.90

Two Hundred Eighty Seven Dollars & 90/100 DOLLARS

FLORIDA INTERNATIONAL BANK
MAIN OFFICE 01
PERRINE, FLORIDA
33157-5692

0501874130565 0211 00 08-05-98

FOR 676282201
for Master Computer Sys.

⑈00000 28790⑈

MAILING AND LIAISON INFORMATION

AS OF 04/22/1999

BellSouth Telecommunications, Inc. (TL720)

Mailing name

BellSouth Telecommunications, Inc.

Company code

TL720

Mailing address

Ms. Nancy H. Sims
BellSouth Telecommunications, Inc.
150 South Monroe Street, Suite 400
Tallahassee, FL 32301-1556

Web site

http://www.bellsouth.com

Company liaison(s)

Marshall M. Criser III, Vice President - Regulatory Relations, (850) 224-7798
Nancy H. Sims, Director - Regulatory Relations, (850) 222-1201

FAX number(s)

222-8640

ABA PROFESSIONAL ASSOCIATION INC.

801 BRICKELL BAY DRIVE
TOWER-4 SUITE #662 MIAMI FL, 33131

Phone 1-800-222-4373 USA & Canada
1-800-344-8211 From The Caribbean
800-122-06 From Venezuela
0130-814747 From Germany
046-059416 From Switzerland

FAX 1-800-442-0497 From USA, Canada, & Caribbean ELSEWHERE 305-374-0497
LOCAL NUMBERS 305- 374-3131, 374-3162, 374-6404 374-0838,

E-MAIL ABAHERE@WORLDNET.ATT.NET

PUBLIC SERVICE COMMISSION
COMMUNICATIONS DIVISION
C/O SUE OLLILA

VOICE 1-850-413-6540
FAX 1-850-413-6541
FAX 1-800-511-0809

RECEIVED
MAY 06 1999
CMU

COMPLAINT # 237627R CONTINUATION.

UPDATE REPORT

5/1/99 WE CONTINUE TO GET CALLS FROM BELL SOUTH REPRESENTATIVE.

BELL SOUTH IS REFUSING TO ACKNOWLEDGE FACTUAL DOCUMENTATION ON RECORDS..

A) THE AGREEMENT FOR ISDN INSTALLATION HAS A SPECIFIC DATE AND CONDITIONS. (ATTACHMENT #A)

B) BELL SOUTH ORIGINAL ATTEMPTS TO CONVERT FROM ANALOG TO ISDN FAILED CAUSING US NUMEROUS CONFLICTS AND PROBLEMS INCLUDING BEING OUT OF SERVICE FOR DAYS ON MORE THAN ONE OCCASION. WITHIN THAT SAME TIME FRAME CERTAIN SPECIFIC ACCOUNTS WERE CREATED WHICH DEPICTS TELEPHONE NUMBERS AND CODES. (SEE THEIR INVOICES MOOT ISSUES) 3333

C) AT SOME POINT AFTER SEVERAL WEEKS SERIOUS PROBLEMS AND CONFLICTS WERE DETECTED ONE OF MANY WAS DISCOVERING THAT UNBEKNOWNST TO US

Bank 305-
367-5532

BELLSOUTH

No Document Payment Receipt

RF-0343 (11-96)

Area Code	Telephone Number	Customer Code	Check Digit
305	374-0838	360	

Billing Name: [illegible]
Street Address: [illegible]
City: [illegible] State: [illegible] Zip Code: 33131

Please Check One
- [x] Payment $ 2500.00
- [ ] Deposit $
- ID Type & Number: [illegible]
- [ ] Advance Payment $

Thank You ...

We Appreciate Your Business!

Your payment will be posted to your BellSouth account within seconds

In order to save time in the future, please bring your telephone bill ... or you may Mail Your Payment

Ply 1 - Customer's Copy

Ply 2 - Agency's Copy

Posted 12-1-98

BELLSOUTH

No Document Payment Receipt

RF-0343 (11-96)

Area Code	Telephone Number	Customer Code	Check Digit
305	374 0838	360	

Billing Name: ABA PROFESSIONAL
Street Address: 1101 BRICKELL AVE
City: MIAMI State: FL Zip Code: 33131

Please Check One
- [x] Payment $ 1283.89
- [ ] Deposit $
- ID Type & Number:
- [ ] Advance Payment $

Thank You ...

We Appreciate Your Business!

Your payment will be posted to your BellSouth account within seconds

In order to save time in the future, please bring your telephone bill ... or you may Mail Your Payment

Ply 1 - Customer's Copy

Ply 2 - Agency's Copy

Posted 12-8-98

Att: Ms. Gayle Phillips

March 9, 1999

MEMORANDUM:

TO: ABA Professional Association

FROM: M. Penelas, Collection Manager

Recently, we sent you a complete breakdown of all your accounts.

We have reviewed the copies of receipts you forwarded to us and have verified that payments were applied as followed:

$500.00 posted 12-1-98 on 305-374-0838-360
$1283.89 posted 12-8-98 on 305-374-0838-360
$144.76 posted on 12-12-98 on 305-374-0838-359

All accounts under ABA Professional Association must be brought up-to-date in order to avoid interruption of your service. All accounts under other corporation names, if not brought up-to-date, will have an impact on your credit because they are being handled by an outside collection agency.

We urge you to call our office and make payment arrangements on all existing and final accounts within the next five days.

If you have any further questions, you can reach us at (305) 780-2198 between the hours of 8:00am. to 5:00p.m.

Mp/jl

Acct#	Class of Service	Date of Installation Date of Disconnect	Amount Due
305-374-3131-555 ABA Professional Assoc 801 Brickell Bay Drive Suite 662 Miami	1FB	8-29-98 - 9-4-98	-0-
305-374-6404-044 ABA Professional Assoc 801 Brickell Bay Drive Suite 662 Miami	RCF	12-18-98 - 12-31-98	-0-
305-672-3011-337 ABA PA International Inc. 930 Washington Ave Miami Beach	1FB	10-25-96 - Present	
305-Y85-5587-703 ABA PA International Inc. 930 Washington Ave Miami Beach	Misc Non-Pay		$10,337.26 Directory Advertising balance
305-Y87-0912-912 ABA Professional Assoc. 801 Brickell Bay Drive Suite 662 Miami	Misc Non-Pay from 305-374-3131		$15,097.17

As mentioned, the enclosed ledgers display payments received and applied towards each account and adjustments that have been credited from BellSouth. No further adjustments is due and all outstanding balance is due.

Acct#	Class of Service	Date of Installation Date of Disconnect	Amount Due
305-374-6404-411 A A International 45 N.W. 5th St Miami	RCF	4-16-92 - 3-[illegible]-98	23.91
305-374-6404-618 ABA Professional Assoc. 45 N W. 5th St.	RCF	4-21-98 - 8-11-98	-0-
305-374-6404-777 ABA Professional Assoc. 801 Brickell Bay Drive Suite 662 Miami	RCF	8-29-98 - 9-4-98	-0-
305-374-2075-606 ABA Professional Assoc. 801 Brickell Bay Drive Suite 662 Miami	1FB	5-23-98 - 6-[illegible]-98	166.38
305-374-0497-618 ABA Professional Assoc. 801 Brickell Bay Drive Suite 662 Miami	1FB	1-15-85 - 8-28-98	1,181.72 Balance transferred from telephone 305-374-3131-617 $1,206.13
305-374-0497-361 ABA Professional Assoc. 801 Brickell Bay Drive Suite 662 Miami	S4B	9-4-98 - 12-31-98	1,929.16 Balance transferred from old telephone 305-374-0838-360 $1,875.48
305-374-3131-710 ABA Professional Assoc 801 Brickell Bay Drive Suite 662	1FB	12-18-98 - Present Working Service	

March 2, 1999

Regular
1FB = Bus Line
S4B = ISDN Basic
RCF = Remote Call Forwarding

MEMORANDUM TO: ABA Professional Association
Attn: Mr. Manuel Lora

FROM: Mrs. Penelas
Manager

Attached please find the breakdown of each account which details all payments applied towards each account and outstanding balance still owed for each account. The list of all accounts are:

Acct#	Class of Service	Date of Installation / Date of Disconnect	Amount Due
	Business Line		
305-867-1314-541 ABA Professional Assoc. 5225 Collins Ave Apt 1117 Miami Beach	1FB	6-4-98 - 8-7-98	598.97
	Businesline		
305-374-0838-359 ABA Professional Assoc. 801 Brickell Bay Dr Suite 662 Miami	1FB	9-1-98 - 9-4-98	-0-
305-374-0838-360 ABA Professional Assoc.	S4B	9-4-98 - New Telephone# 305-374-0497	130.20 balance transferred to 305-374-0497-361
305-374-0838-559 ABA Professional Assoc	S4B	8-27-98 - 8-28-98	-0-
305-374-0838-923 ABA Travel Group Corp. 801 Brickell Bay Drive, Suite 662	1FB	10-9-89- 8-27-98	283.14

for the recurring monthly charges.

Mr. Lora agreed to place the orders and provide Ms. Powanda the information required to convert the four numbers back to analog service.

Following is information concerning equipment that the customer purchased from BellSouth in association with the ISDN service:

The customer purchased telephone equipment from us at the end of July. The system is ISDN compatible, but unable to support network features that Mr. Lora is requesting. Ms. Connie Page, supervisor, spent many hours on the phone with Mr. Lora and also with technical support trying to satisfy his needs. Unfortunately, we can not meet his needs, so we have agreed to take the system back and adjust the order to reflect no charge for the equipment. The equipment order totaled $5,489.11.

1989.36
5489.11
7478.47

From: PATRICIA @ SMTP (Patricia A. Godsil) {Patricia.A.Godsil@bridge.bellsou
To: Nancy Cortijo-Simmonds
Subject: 237627-R ABA

===NOTE==========12/23/98==5:02pm==========

Return-Path: <Patricia.A.Godsil@bridge.bellsouth.com>
Received: from carnac.bst.bellsouth.com (198.79.17.65)
by mail.psc.state.fl.us (Connect2-SMTP 4.30A.1000128)
for <NCORTIJO@PSC.STATE.FL.US>; Wed, 23 Dec 1998 16:57:54 -0500
Received: from bos16960.al.bst.bls.com ([90.11.244.149])
by carnac.bst.bellsouth.com (Netscape Messaging Server 3.52)
with ESMTP id AAA3DF0 for <NCORTIJO@PSC.STATE.FL.US>;
Wed, 23 Dec 1998 16:02:49 -0600
Received: from a1244034 ([90.11.244.34]) by bos16960.al.bst.bls.com
(Netscape Messaging Server 3.52) with ESMTP id AAA26A4
for <NCORTIJO@PSC.STATE.FL.US>; Wed, 23 Dec 1998 16:02:39 -0600
Received: by a1244034
(1.37.109.24/16.2) id AA103280556; Wed, 23 Dec 1998 16:02:36 -0600
Received: by bridge.bst.bls.com
(1.0/1.0) id H0000b7c07c92ccd; Wed, 23 Dec 1998 16:02:30 -0600
Date: Wed, 23 Dec 1998 16:02:19 -0600
From: Patricia A. Godsil <Patricia.A.Godsil@bridge.bellsouth.com>
Subject: 237627-R ABA
Message-Id: <H0000b7c07c92ccd@bridge.bst.bls.com>
To: Nancy Cortijo-simmonds <NCORTIJO@PSC.STATE.FL.US>

12-23-98

FROM: Pat Godsil
BellSouth

RE: ABA
305-374-0838

CASE NO. 237627-R

Our investigation reveals that the customer has been generally unhappy with his service from BellSouth since he converted from analog to ISDN (digital) service. There are features that Mr. Lora used with his analog service that are not compatible with the ISDN service. Attempts were made to accommodate the customer by issuing a 'Special Assembly', however there appears to be no option other than to convert the service back to analog to gain access to these particular features.

A conference call was held on December 15, 1998, at 2:00 p.m. In attendance were Mr. Lora, John Jenkins, Service Manager, BellSouth Business Repair Center, and Elaina Powanda, BellSouth Vendor Services. Mr. Lora's concerns with his service were discussed along with specific issues relative to installation charges and conversion back to analog service. Ms. Powanda agreed to adjust the account for past installation charges totaling $1989.36 that were incurred when the service was converted back to analog after the initial conversion to ISDN.

Also, Mr. Lora decided to convert two of his three Basic Rate ISDN (BRI) services which include four of his telephone numbers back to analog to utilize the custom calling features. This configuration seemed to better meet the customer's requirements.

It was agreed that there would be no installation charges for this conversion back to analog service, however, the customer is responsible

Printed by Nancy Cortijo-Simmonds 2/09/99 8:47am

From: PATRICIA @ SMTP (Patricia A. Godsil) (Patricia.A.Godsil@bridge.bellsou
To: Nancy Cortijo-Simmonds
Subject: 237627R ABA PROF ASSOC.

---NOTE----------2/05/99--2:50pm----------

Return-Path: <Patricia.A.Godsil@bridge.bellsouth.com>
Received: from carnac.bst.bellsouth.com (198.79.17.65)
by mail.psc.state.fl.us (Connect2-SMTP 4.30A.1000128)
for <NCORTIJO@PSC.STATE.FL.US>; Fri, 5 Feb 1999 14:54:55 -0500
Received: from bos16960.al.bst.bls.com ([90.11.244.149])
by carnac.bst.bellsouth.com (Netscape Messaging Server 3.52)
with ESMTP id AAA5AC4 for <NCORTIJO@PSC.STATE.FL.US>;
Fri, 5 Feb 1999 13:51:37 -0600
Received: from a1244034 ([90.11.244.34]) by bos16960.al.bst.bls.com
(Netscape Messaging Server 3.52) with ESMTP id AAA34CC
for <NCORTIJO@PSC.STATE.FL.US>; Fri, 5 Feb 1999 13:50:57 -0600
Received: by a1244034
(1.37.109.24/16.2) id AA028824254; Fri, 5 Feb 1999 13:50:54 -0600
Received: by bridge.bst.bls.com
(1.0/1.0) id H0000b7c07e93e63; Fri, 5 Feb 1999 13:50:51 -0600
Date: Fri, 5 Feb 1999 13:50:30 -0600
From: Patricia A. Godsil <Patricia.A.Godsil@bridge.bellsouth.com>
Subject: 237627R ABA PROF ASSOC.
Message-Id: <H0000b7c07e93e63@bridge.bst.bls.com>
To: Nancy Cortijo-simmonds <NCORTIJO@PSC.STATE.FL.US>

2-5-99

FROM: Pat Godsil
BellSouth

RE: ABA Professional Association
305-374-0838

CASE NO. 237627R (SUPPLEMENTAL INQUIRY)

Our investigation reveals that upon receipt of the supplemental inquiry, Ms. Elena Powanda, BellSouth Vendor Services, spoke to Mr. Lora regarding the letter dated January 11, 1999.

Mr. Lora was questioning the amount of credits BellSouth would be issuing on account 305 374-0497. Ms. Powanda advised Mr. Lora that per their conversation in December, 1998, all installation and monthly charges associated with the ISDN lines would be adjusted. *

Ms. Powanda advised Mr. Lora that the adjustment for the last line would be $544.43 plus taxes.

FAX

Date 3-11-99

Number of pages including cover sheet 8

TO: Nancy Cartejo - Summerlin

Please deliver to Nancy ASAP

Phone

Fax Phone 850 413 6138 - NOT WORKING.

FROM: Margarita Welling
BellSouth
Telecommunications

Phone 305-347-5477

Fax Phone 305-350-9093

CC:

REMARKS: ☒ Urgent ☐ For your review ☐ Reply ASAP ☐ Please Comment

Re: ABA Professional Assoc.

Nancy, if there is something you can't read, please call me

Thanks

M

customer is not even paying his current charges that are not in dispute on his account, 305-374-3131.

Please advise BellSouth of your determination on this case as soon as possible so that we may proceed with collection procedures.

From: PATRICIA @ SMTP {Patricia.A.Godsil@bridge.bellsouth.com}
To: Nancy Cortijo-Simmonds
Subject: 237627R ABA

===NOTE==========3/24/99=10:28am==========

Return-Path: <Patricia.A.Godsil@bridge.bellsouth.com>
Received: from carnac.bst.bellsouth.com (198.79.17.65)
by mail.psc.state.fl.us (Connect2-SMTP 4.30A.1000128)
for <NCORTIJO@PSC.STATE.FL.US>; Wed, 24 Mar 1999 10:31:38 -0500
Received: from om2.al.bst.bls.com ([90.11.245.61])
by carnac.bst.bellsouth.com (Netscape Messaging Server 3.52)
with ESMTP id AAA492C for <NCORTIJO@PSC.STATE.FL.US>;
Wed, 24 Mar 1999 09:27:51 -0600
Received: from localhost (root@localhost)
by om2.al.bst.bls.com (8.8.6 (PHNE_14041)/8.8.6) with SMTP id JAA03484
for NCORTIJO@PSC.STATE.FL.US; Wed, 24 Mar 1999 09:29:00 -0600 (CST)
From: Patricia.A.Godsil@bridge.bellsouth.com
X-OpenMail-Hops: 1
Date: Wed, 24 Mar 1999 09:28:49 -0600
Message-Id: <H00022f701b6e813@MHS>
Subject: 237627R ABA
MIME-Version: 1.0
TO: NCORTIJO@PSC.STATE.FL.US
Content-Type: text/plain; charset=US-ASCII; name="237627R"
Content-Disposition: inline; filename="237627R"
Content-Transfer-Encoding: 7bit

----------[Content-type: text/plain; name=237627R]----------

3-24-99

FROM: Pat Godsil
BellSouth

RE: ABA Professional Assoc.
305-374-0838

CASE NO. 237627R

This is in final response to our interim dated 3-5-99.

As indicated on the fax sent to you on 3-11-99, BellSouth investigated the payments the customer claimed had not been posted to his account and advised the customer that the payments were in fact posted to the customer's accounts, and the dates they posted.

Further, in that same letter to the customer dated March 9, 1999, the customer was advised that payments or arrangements needed to be made on his accounts to avoid an interruption of the service.

Nancy, to answer your question regarding the relation of ABA Travel and ABA Professional Association, 305-374-0838 was originally established as ABA Travel, then it was changed to ABA Professional Assoc.

Also, ABA PA International for telephone number 305-672-3011 is another active corporation in the group. The officer of the company is Tamara Lora, Manuel Lora's wife.

Nancy, BellSouth has gone above and beyond to assist this customer. The

STATE OF FLORIDA

Commissioners:
JULIA L. JOHNSON, CHAIRMAN
J. TERRY DEASON
SUSAN F. CLARK
JOE GARCIA
E. LEON JACOBS, JR.

DIVISION OF CONSUMER AFFAIRS
BEVERLEE DEMELLO
DIRECTOR
(850) 413-6100
TOLL FREE 1-800-342-3552

Public Service Commission

FACSIMILE TRANSMITTAL COVER SHEET

DATE: 2/22/99

TO: Mr. Norw /ABA

OFFICE/BUSINESS: 305-374-0497

FAX NUMBER:

FROM: DIVISION OF CONSUMER AFFAIRS

FAX NUMBER: (850) 413-6362

TELEPHONE NUMBER: (850) 413-6100 OR 1-800-342-3552

COMMENTS: 237627-R PSC Case

NUMBER OF PAGES, INCLUDING THIS COVER SHEET: 4.

STATE OF FLORIDA

DIVISION OF CONSUMER AFFAIRS
BEVERLEE DEMELLO
DIRECTOR
(850) 413-6100
TOLL FREE 1-800-342-3552

Public Service Commission

FACSIMILE TRANSMITTAL COVER SHEET

DATE: 3/25/99

TO: Manuel Lora

OFFICE/BUSINESS: 305-374-0497

FAX NUMBER:

FROM: DIVISION OF CONSUMER AFFAIRS

FAX NUMBER: (850) 413-6362

TELEPHONE NUMBER: (850) 413-6100 OR 1-800-342-3552

COMMENTS: sending report from BellSouth stating that you are responsible for monthly charges. Will send a copy of the entire report certified mail
also sending original fax sheet

NUMBER OF PAGES, INCLUDING THIS COVER SHEET: 4

Acct#	Class of Service	Date of Installation Date of Disconnect	Amount Due
305-374-3131-555 ABA Professional Assoc 801 Brickell Bay Drive Suite 662 Miami	1FB	8-29-98 - 9-4-98	-0-
305-374-6404-044 ABA Professional Assoc 801 Brickell Bay Drive Suite 662 Miami	RCF	12-18-98 - 12-31-98	-0-
305-672-3011-337 ABA PA International Inc. 930 Washington Ave Miami Beach	1FB	10-25-96 - Present	
305-Y85-5587-703 ABA PA International Inc. 930 Washington Ave Miami Beach	Misc Non-Pay		$10,337.26 Directory Advertising balance
305-Y87-0912-912 ABA Professional Assoc. 801 Brickell Bay Drive Suite 662 Miami	Misc Non-Pay from 305-374-3131		$15,097.17

As mentioned, the enclosed ledgers display payments received and applied towards each account and adjustments that have been credited from BellSouth. No further adjustments is due and all outstanding balance is due.

Acct#	Class of Service	Date of Installation Date of Disconnect	Amount Due
305-374-6404-411 A A International 45 N.W. 5th St Miami	RCF	4-16-92 - 3-2-98	23.91
305-374-6404-618 ABA Professional Assoc. 45 N.W. 5th St.	RCF	4-21-98 - 8-21-98	-0-
305-374-6404-777 ABA Professional Assoc. 801 Brickell Bay Drive Suite 662 Miami	RCF	8-29-98 - 9-4-98	-0-
305-374-2075-606 ABA Professional Assoc. 801 Brickell Bay Drive Suite 662 Miami	1FB	5-23-98 - 6-6-98	166.38
305-374-0497-618 ABA Professional Assoc. 801 Brickell Bay Drive Suite 662 Miami	1FB	1-15-85 - 8-28-98	1,181.72 Balance transferred from telephone 305-374-3131-617 $1,206.13
305-374-0497-361 ABA Professional Assoc. 801 Brickell Bay Drive Suite 662 Miami	S4B	9-4-98 - 12-31-98	1,929.16 Balance transferred from old telephone 305-374-0838-360 $1,875.48
305-374-3131-710 ABA Professional Assoc 801 Brickell Bay Drive Suite 662	1FB	12-18-98 - Present Working Service	

March 2, 1998

MEMORANDUM TO: ABA Professional Association
Attn: Mr. Manuel Lora

FROM: Mrs. Penelas
Manager

Attached please find the breakdown of each account which details all payments applied towards each account and outstanding balance still owed for each account. The list of all accounts are:

Acct#	Class of Service	Date of Installation Date of Disconnect	Amount Due
305-867-1314-541 ABA Professional Assoc. 5225 Collins Ave Apt. 1117 Miami Beach	1FB	6-4-98 - 8-7-98	598.97
305-374-0838-359 ABA Professional Assoc. 801 Brickell Bay Dr. Suite 662 Miami	1FB	9-1-98 - 9-4-98	-0-
305-374-0838-360 ABA Professional Assoc.	S4B	9-4-98 - New Telephone# 305-374-0497	130.20 balance transferred to 305-374-0497-361
305-374-0838-559 ABA Professional Assoc	S4B	8-27-98 - 8-28-98	-0-
305-374-0838-923 ABA Travel Group Corp. 801 Brickell Bay Drive, Suite 662	1FB	10-9-89- 8-27-98	283.14

FAX

BellSouth Telecommunications, Inc.
150 W. Flagler St., Suite 1815
Miami, Florida 33130

Date 3-5-99

Number of pages including cover sheet 8

To:	From:
Nancy Cortijo-Simmons	Pat Godsil
	State Appeals
Phone	Phone 305-347-5481
Fax Number 850-413-~~6138~~ 6362	Fax Number 305-350-9093

REMARKS:

☐ Urgent ☐ For your review ☐ Reply ASAP ☐ Please comment

Nancy,

RE: 237627R ABA

Attached is a copy of the letter that was sent to the customer from Mrs. Penelos.

Pat Godsil

From: PATRICIA @ SMTP (Patricia A. Godsil) {Patricia.A.Godsil@bridge.bellsou
To: Nancy Cortijo-Simmonds
Subject: 237627R ABA

===NOTE==========3/05/99==4:04pm==========

Return-Path: <Patricia.A.Godsil@bridge.bellsouth.com>
Received: from carnac.bst.bellsouth.com (198.79.17.65)
by mail.psc.state.fl.us (Connect2-SMTP 4.30A.1000128)
for <NCORTIJO@PSC.STATE.FL.US>; Fri, 5 Mar 1999 16:16:33 -0500
Received: from bos16960.al.bst.bls.com ([90.11.244.149])
by carnac.bst.bellsouth.com (Netscape Messaging Server 3.52)
with ESMTP id AAA398 for <NCORTIJO@PSC.STATE.FL.US>;
Fri, 5 Mar 1999 15:17:41 -0600
Received: from a1244034 ([90.11.244.34]) by bos16960.al.bst.bls.com
(Netscape Messaging Server 3.52) with ESMTP id AAA4C17
for <NCORTIJO@PSC.STATE.FL.US>; Fri, 5 Mar 1999 15:17:34 -0600
Received: by a1244034
(1.37.109.24/16.2) id AA262098651; Fri, 5 Mar 1999 15:17:31 -0600
Received: by bridge.bst.bls.com
(1.0/1.0) id H0000b7c080028ee; Fri, 5 Mar 1999 15:17:28 -0600
Date: Fri, 5 Mar 1999 15:04:41 -0600
From: Patricia A. Godsil <Patricia.A.Godsil@bridge.bellsouth.com>
Subject: 237627R ABA
Message-Id: <H0000b7c080028ee@bridge.bst.bls.com>
To: Nancy Cortijo-simmonds <NCORTIJO@PSC.STATE.FL.US>

3-5-99

FROM: Pat Godsil
BellSouth

RE: ABA Professional Association
305-374-0838

CASE NO. 237627R (SUPPLEMENTAL INQUIRY)

Our investigation reveals that upon receipt of the supplemental inquiry, on 3-2-99 Mrs. Maria Penelas, Supervisor - Collections, called the business
telephone and left a message on the voice mail for the customer to call.

When Ms. Penelas did not hear from the customer, she sent a letter detailing his accounts and the balances owed.

On 3-4-99 Mr. Lora faxed to Ms. Penelas another letter with additional concerns. Mr. Lora claims he has receipts for payments where he does not see those payments applied.

Note, a copy of Ms. Penelas' 3-2-99 letter will be faxed for your convenience.

A further response will be provided by 3-30.

ATT: NANCY SIMMONDS

CONT.

BELLSOUTH

No Document Payment Receipt

RF-9343 (11-96)

Area Code	Telephone Number	Customer Code	Check Digit
305	374-0838		

Billing Name: DBA TRAVEL GROUP

Street Address: 801 BRICKELL BAY DR. #1660

City: MIAMI State: FL Zip Code: 33131

Please Check One

- [x] Payment $ 500.00
- [ ] Deposit $
- ID Type & Number: 2013740838
- [ ] Advance Payment $

Thank You ...

We Appreciate Your Business!

Your payment will be posted to your BellSouth account within seconds.

In order to save time in the future, please bring your telephone bill.... or you may Mail Your Payment.

SEARS ADVENTR 2
TSF PA P 0442 12/05/98 $500.00 CK
AYM 305-374-0838-750 1441

Ply 1 - Customer's Copy

Ply 2 - Agency's Copy

BELLSOUTH

RF-9041
(10-95)

Payment Receipt

Thank You...

We Appreciate Your Business!

Your payment will post to your BellSouth account within seconds.

SEARS ADVENTR 2
36F PA P 0047 12/12/98 $144.76 CK
PAYH 305-374-0835/359-0440-B01

BELLSOUTH

RF-9343
(11-96)

No Document Payment Receipt

Area Code	Telephone Number	Customer Code	Check Digit
305	374 · 6404	618	

Billing Name: ABA PROFESSIONAL

Street Address: 1101 BRICKELL AVE

City: MIAMI State: FL Zip Code: 33231

Please Check One

- [x] Payment $ 63.87
- [ ] Deposit $
  ID Type & Number
- [ ] Advance Payment $

Thank You ...

We Appreciate Your Business!

Your payment will be posted to your BellSouth account within seconds.

SEARS CRL 66 2
36F PA P 0003 12/08/98 $63.87 CHK
PAYH 305-374-6404-618 [illegible]

In order to save time in the future, please bring your telephone bill.... or you may Mail Your Payment.

Ply 1 - Customer's Copy Ply 2 - Agency's Copy

BELLSOUTH

Pr-0841
(10-95)

Payment Receipt

Thank You...

We Appreciate Your Business!

Your payment will post to your BellSouth account within seconds.

SEARS ADVENTURA $ 144.76

SEARS ADVENTR 2
36F PA P 0047 12/12/98 $144.76 CK
PAYM 305-374-0835/359/0440-0001

374-0835-0838-359 Posted 12-12-98

374-0838-359

BELLSOUTH

BellSouth Communication Systems
5555 Windward Parkway, Suite B
Alpharetta, GA 30201-3895

June 10, 1998
Manuel Lara.
ABA
905 S. Bayshore Drive
S1625, 1626
Miami, FL 33131

Dear Mr. Lara:

Thank you for your interest in the Norstar telephone system from BellSouth Communication Systems. BellSouth has the resources necessary to provide you with the best equipment and service available; just ask one of our 10,000 BellSouth Norstar customers.

The BellSouth Norstar system is fully digital, cost efficient, and its ease of use, feature rich sets and reliability are unsurpassed. With nearly 6 million telephone sets in over 70 countries, ***Norstar is the #1 telephone system in the world.*** And that's because Norstar not only meets the needs of business; it anticipates them.

Enclosed is a proposal for a new BellSouth Norstar telephone system. The proposal outlines the equipment summary, which includes a one year warranty, and installation details. Should you have any questions about the enclosed material, please feel free to contact me at 800-782-7258.

Sincerely,

Sara Ruiz

Sara Ruiz
Account Executive

BELLSOUTH

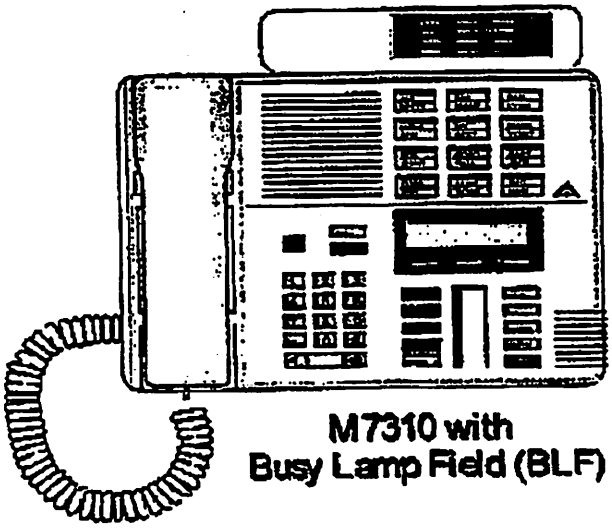

M7310 with
Busy Lamp Field (BLF)

Sara Ruiz
5405 Windward Parkway
Alpharetta, GA 30004
Phone: (800) 782-7258
Fax: (770) 708- 5598

TO: Manuel

Fax Number: (305) 374-0497

Cover Page Plus _____ **Pages Included**

Comments:

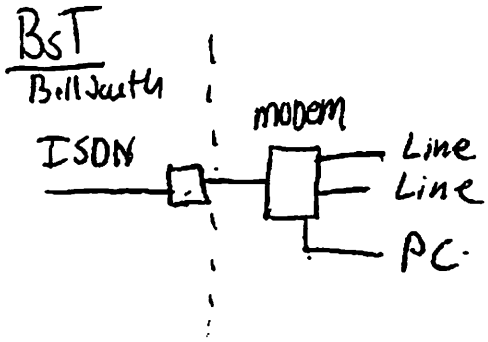

If you have problems receiving this fax, please call me at the number listed above.

ABA PROFESSIONAL ASSOCIATION INC.

801 BRICKELL BAY DRIVE
TOWER #4 SUITE #662 MIAMI FL, 33131

F) ULTIMATELY IT IS UNFAIR AND UNJUST FOR BELL SOUTH COLLECTION DEPARTMENT TO DEMAND THAT THIS MATTER REGARDING OUR LINES BE RESOLVE WITHIN 10 DAYS WHEN THE ISSUES ARE SEVERAL, AND THE ENTITIES ARE ALL DIFFERENT DIVISIONS OF BELL SOUTH. ABA HAS PATIENTLY WAITED FOR BELL SOUTH TO LOOK FOR REMEDIES AND ALTERNATIVES FOR OVER 3 MONTHS.

THANK YOU IN ADVANCE FOR UYOUR PROMPT ATTENTION TO THIS MATTER/

MS GORDON STATED THAT SHE CAN NOT OPEN A CASE FOR ME. SHE SAYS I MUST WAIT FOR

MANUEL LORA

C.E.O.

PLEASE SEE ATTACHED DOCUMENTS

ABA PROFESSIONAL ASSOCIATION INC.

801 BRICKELL BAY DRIVE
TOWER #4 SUITE #662 MIAMI FL, 33131

Phone 1-800-222-4373 USA & Canada
1-800-344-8211 From The Caribbean
800-122-06 From Venezuela
0130-814747 From Germany
046-059416 From Switzerland

FAX 1-800-442-0497 From USA, Canada, & Caribbean ELSEWHERE 305-374-0497
LOCAL NUMBERS 305- 374-3131, 374-3162, 374-6404 374-0838,

E-MAIL ABAHERE@WORLDNET.ATT.NET

DECEMBER 10, 1998

PUBLIC SERVICE COMMISSION
C/O NANCY SIMMONDS
VOICE 1-800-342-3552
FAX 800-511-0809

SUBJECT : COMPLAIN ON ISDN / ANALOG SERVICE FOR THE FOLLOWING ACCOUNTS 305-374-0838, 374-3131, 374-3162 OUR CUSTOMER FOR ISDN IS ID#112615001

DEAR MS , I TAKE THIS OPPORTUNITY TO THANK YOU FOR YOUR PROMPT ATTENTION. A FEMALE NAMED ANITA BRYANT VISITED OUR LOCATION REPRESENTING THE BELL SOUTH NETWORK DIVISION.

A) THE ISDN SERVICE IS INADEQUATE AND DOES NOT ENHANCES THE COMPANY BUT DIMINISHES IT'S QUEST FOR IMPROVEMENT.

B) PLACING AN ADAPTER ON THE ISDN CHANGING BACK TO ANALOG WHILE BILLING THE CUSTOMER FOR ISDN SERVICE WHICH IS NOT PROVIDED SHALL BE SUFFICIENT FOR THE PUBLIC SERVICE COMMISSION TO DIRECT THE BUSINESS OFFICE OF BELL SOUTH FROM BILLING ABA FOR A SERVICE WHICH THE OTHER BELL SOUTH ENTITY PROHIBITS US FROM GETTING.

C) PLACING THIS EQUIPMENT WITH OUT THE KNOWLEDGE OF THE COMPANY CONSENT HAS SERIOUSLY AFFECTED THE OPERATION OF THE COMPANY AND CAUSED EXCESSIVE COST IN TIME AND CHARGES WHICH SHOULD REQUIRE BELL SOUTH BUSINESS OFFICE TO ADJUST AND COMPENSATE THE CUSTOMER.

D) NOT MEETING THE COMMITMENT DATES SHOULD PROHIBIT BELL SOUTH FROM IMPOSING ANY INSTALLATION CHARGES FOR EITHER ISDN OR ANALOG SERVICES SINCE THEY HAVE FELT ON EACH AND EVERY OCCASION TO MEET THEIR TARGET DATES.

FAX

To: REP NANCY SIMMONDS

Voice Phone Number: 1-800-342-3552

From: C.E.O. MANUEL, LORA

Company: ABA PROFESSIONAL ASSOCIATION

Fax Number: 305 374 0497

Voice Number: 305-374-3162

MESSAGE

DEAR MS SIMMOND THANK YOU IN ADVANCE FOR YOUR PROMPT ASSISTANCE. PLEASE CONTACT ME TO CONFIRM RECEIPT OF THIS FAX.

THANK YOU MR M. LORA 305-374-0838 AND OR 374-3162

Date: 12/10/98

HP OfficeJet
Personal Printer/Fax/Copier

Fax Log Report

Dec-14-98 03:31 PM

Identification	Result	Pages	Type	Date	Time	Duration	Diagnostic
613053509091	OK	11	Sent	Dec-14	03:28P	00:03:03	002482030022

1.3.0 2.8

STATE OF FLORIDA

Commissioners:
JULIA L. JOHNSON, CHAIRMAN
J. TERRY DEASON
SUSAN F. CLARK
JOE GARCIA
E. LEON JACOBS, JR.

DIVISION OF CONSUMER AFFAIRS
BEVERLEE DEMELLO
DIRECTOR
(850) 413-6100
TOLL FREE 1-800-342-3552

Public Service Commission

FACSIMILE TRANSMITTAL COVER SHEET

DATE: 12/14/98

TO: Sherry Coxe

OFFICE/BUSINESS: Bell South

FAX NUMBER: 305-350-9091

FROM: DIVISION OF CONSUMER AFFAIRS

FAX NUMBER: (850) 413-6362

TELEPHONE NUMBER: (850) 413-6100 OR 1-800-342-3552

COMMENTS: to assist with investigation.
This was faxed 12/10
ABA 23162702

NUMBER OF PAGES, INCLUDING THIS COVER SHEET: 11

HP OfficeJet
Personal Printer/Fax/Copier

Fax Log Report

Dec-14-98 01:44 PM

Identification	Result	Pages	Type	Date	Time	Duration	Diagnostic
613053740497	OK	02	Sent	Dec-14	01:43P	00:01:20	002380120020

'.10 28

STATE OF FLORIDA

Commissioners:
JULIA L. JOHNSON, CHAIRMAN
J. TERRY DEASON
SUSAN F. CLARK
JOE GARCIA
E. LEON JACOBS, JR.

DIVISION OF CONSUMER AFFAIRS
BEVERLEE DEMELLO
DIRECTOR
(850) 413-6100
TOLL FREE 1-800-342-3552

Public Service Commission

FACSIMILE TRANSMITTAL COVER SHEET

DATE: December 14, 1998

TO: Manuel Lera

OFFICE/BUSINESS: ABA

FAX NUMBER: (305) 374-0497

FROM: DIVISION OF CONSUMER AFFAIRS

FAX NUMBER: (850) 413-6362

TELEPHONE NUMBER: (850) 413-6100 OR 1-800-342-3552

COMMENTS:

NUMBER OF PAGES, INCLUDING THIS COVER SHEET: 2

ABA PROFESSIONAL ASSOCIATION INC.

801 BRICKELL BAY DRIVE
TOWER #4 SUITE #662 MIAMI FL, 33131

D) BELL SOUTH WAS NOT ABLE TO CONVERT US ON DATE AGREED TO, BECAUSE OF CONFLICTS WITHIN THE EQUIPMENT THEY SOLD US OR ISDN SWITCHING SYSTEM AT THEIR CENTRAL OFFICE.

E) BELL SOUTH HAD TO SWITCH US BACK TO ANALOG AFTER 9-10 DAYS OF NO SERVICE. WHEN DOING SO THEY INSTALL NEW SERVICE, BILLED US FOR IT AND ATTEMPTED TO COLLECT IT. (BAD FAITH) .

F) ONCE BELL SOUTH DETERMINED THE CONFLICT WAS WITHIN THE EQUIPMENT THEY HAD SOLD US. WE WERE THEN AGAIN GIVEN ANOTHER DATE WHICH THEY FELT TO MEET AND SHORTLY AFTER THEY WERE ABLE TO INSTALL THE ISDN SERVICE.

G) ONCE AGAIN THEY BILLED US AND ATTEMPTED TO COLLECT FROM US. EVEN THOUGH THESE NUMEROUS ERRORS WERE CAUSED BY THEM

H) WE THEN ENCOUNTED SERIOUS CONFLICTS WITH OUR MODEM FAX SUYSTEM THE DIGITAL MODEM PROVIDED DID NUMEROUS TESTING DETERMINING THAT THERE WAS NOT WITH THE PARTS WE HAD PURCHASED INDEPENDENTLY FROM BELL SOUTH.

I) WE THEN CONFRONTED BELL SOUTH WHICH HAD NO CHOICE BUT TO REVEAL THE TRUTH. BELL SOUTH EXPLAINED THAT THEY

J) UNBEKNOWNST TO US AND OTHERS BELL SOUTH PLACED AN ADAPTER WITHIN THE SYSTEM PROHIVITING US TO HAVE USE OF THE ISDN COMPONENTS WE HAD PURCHASED TO BE USED WITH THE ISDN SERVICE.

K) BELL SOUTH ACTIONS ARE CONVINCINGLY DISHONEST. PLACING AN ADAPTER IS A DEVIOUS ACTION, NOT TELLING THEIR CUSTOMERS WAS DECEITFULL. BELL SOUTH SHOULD INFORM ALL RESPECTIVES CUSTOMERS THAT THEY SHALL NOT INCURR EXPENSES ON ISDN MODEM SERVICE BECAUSE THEY WILL NOT GET IT. SINCE IT IS THEIR PRACTICE TO PLACE ADAPTERS ON ISDN MODEM SERVICE CONVERTING IT BACK TO ANALOG.

C.E.O.

PLEASE SEE ATTACHED DOCUMENTS

ABA PROFESSIONAL ASSOCIATION INC.

801 BRICKELL BAY DRIVE
TOWER #4 SUITE #662 MIAMI FL, 33131

Phone 1-800-222-4373 USA & Canada
1-800-344-8211 From The Caribbean
800-122-06 From Venezuela
0130-814747 From Germany
046-059416 From Switzerland

FAX 1-800-442-0497 From USA, Canada, & Caribbean ELSEWHERE 305-374-0497
LOCAL NUMBERS 305- 374-3131, 374-3162, 374-6404 374-0838,

E-MAIL ABAHERE@WORLDNET.ATT.NET

JANUARY 11, 1999

PUBLIC SERVICE COMMISSION
C/O NANCY SIMMONDS
VOICE 1-800-342-3552
FAX 800-511-0809.

COMPLAINT #237627R

ADDITIONAL ISSUES.

SUBJECT : OUR FAX MODEM LINES 305-374-0497 HAVE NEVER FUNCTIONED AS ISDN AS OUR SIGNED AGREEMENT WITH BELL SOUTH DEPICTED.

BELL SOUTH SOLD OUR FIRM THE EQUIPMENT AND ISDN SERVICE WITH THE UNDERSTANDING AND KNOWLEDGE THAT THERE WOULD BE NO CHARGE FOR INSTALLATION

UNBEKNOWNST TO US THE ISDN LINES 305-374-0497 NEVER FUNCTIONED AS AN ISDN BECAUSE OF BELL SOUTH CONFLICTS, INTERNAL PROBLEMS ASSOCIATED WITH THEIR EQUIPMENTS, SYSTEMS, EMPLOYEES.

A) BELL SOUTH HAD INFORMED US VIA PHONE AND VIA FAX THAT THERE WOULD BE " NO " INSTALLATIONS CHARGES AS PER OUR AGREEMENT.

B) BELL SOUTH NEVER MET THE COMMITMENT,INSTALLATION DATES. NOR INSPECTION DATES.

C) BELL SOUTH FAILED TO COMPLY WITH OUR ORIGINAL REQUEST OF CONVERTING ONE LINE AT A TIME.

HP OfficeJet
Personal Printer/Fax/Copier

Fax Log Report

Jan-27-99 01:47 PM

Identification	Result	Pages	Type	Date	Time	Duration	Diagnostic
613053509091	OK	05	Sent	Jan-27	01:46P	00:01:42	002482030022

1.3.0 2.8

STATE OF FLORIDA

Commissioners:
JULIA L. JOHNSON, CHAIRMAN
J. TERRY DEASON
SUSAN F. CLARK
JOE GARCIA
E. LEON JACOBS, JR.

DIVISION OF CONSUMER AFFAIRS
BEVERLEE DEMELLO
DIRECTOR
(850) 413-6100
TOLL FREE 1-800-342-3552

Public Service Commission

FACSIMILE TRANSMITTAL COVER SHEET

DATE: 1/27/99

TO: Sherri Coxe

OFFICE/BUSINESS: Bell South

FAX NUMBER: 305-9091

FROM: DIVISION OF CONSUMER AFFAIRS

FAX NUMBER: (850) 413-6362

TELEPHONE NUMBER: (850) 413-6100 OR 1-800-342-3552

COMMENTS: ABA 237427R

NUMBER OF PAGES, INCLUDING THIS COVER SHEET: ~~4~~ 5

---

om: PATRICIA @ SMTP (Patricia A. Godsil) {Patricia.A.Godsil@bridge.bellsou
Nancy Cortijo-Simmonds
bject: 237627R ABA PROF ASSOC.

=NOTE==========2/05/99==2:50pm==========

turn-Path: <Patricia.A.Godsil@bridge.bellsouth.com>
ceived: from carnac.bst.bellsouth.com (198.79.17.65)
by mail.psc.state.fl.us (Connect2-SMTP 4.30A.1000128)
for <NCORTIJO@PSC.STATE.FL.US>; Fri, 5 Feb 1999 14:54:55 -0500
ceived: from bos16960.al.bst.bls.com ([90.11.244.149])
by carnac.bst.bellsouth.com (Netscape Messaging Server 3.52)
with ESMTP id AAA5AC4 for <NCORTIJO@PSC.STATE.FL.US>;
Fri, 5 Feb 1999 13:51:37 -0600
ceived: from a1244034 ([90.11.244.34]) by bos16960.al.bst.bls.com
(Netscape Messaging Server 3.52) with ESMTP id AAA34CC
for <NCORTIJO@PSC.STATE.FL.US>; Fri, 5 Feb 1999 13:50:57 -0600
ceived: by a1244034
(1.37.109.24/16.2) id AA028824254; Fri, 5 Feb 1999 13:50:54 -0600
ceived: by bridge.bst.bls.com
(1.0/1.0) id H0000b7c07e93e63; Fri, 5 Feb 1999 13:50:51 -0600
te: Fri, 5 Feb 1999 13:50:30 -0600
om: Patricia A. Godsil <Patricia.A.Godsil@bridge.bellsouth.com>
bject: 237627R ABA PROF ASSOC.
ssage-Id: <H0000b7c07e93e63@bridge.bst.bls.com>
: Nancy Cortijo-simmonds <NCORTIJO@PSC.STATE.FL.US>

5-99

OM: Pat Godsil
BellSouth

:: ABA Professional Association
305-374-0838

SE NO. 237627R (SUPPLEMENTAL INQUIRY)

ur investigation reveals that upon receipt of the supplemental inquiry,
s. Elena Powanda, BellSouth Vendor Services, spoke to Mr. Lora regarding
e letter dated January 11, 1999.

. Lora was questioning the amount of credits BellSouth would be issuing
account 305 374-0497. Ms. Powanda advised Mr. Lora that per their
onversation in December, 1998, all installation and monthly charges
ssociated with the ISDN lines would be adjusted.

s. Powanda advised Mr. Lora that the adjustment for the last line would
e $544.43 plus taxes.

BELLSOUTH

RF-9041
(10-95)

Payment Receipt

Thank You...

We Appreciate Your Business!

Your payment will post to your BellSouth account within seconds.

SEARS ADVENTR 2
3GF PA P 0047 12/13/98 $144.76 CK
PAYM 305-374-0835 359-0440-001

Brenda 305-
967-5532

BELLSOUTH

No Document Payment Receipt

RF-9343 (11-96)

Area Code	Telephone Number	Customer Code	Check Digit
305	374-0838	360	

Billing Name: ABA Travel Group

Street Address: 801 Brickell Bay Apt 1662

City: Miami State: Fl. Zip Code: 33131

Please Check One

- [x] Payment $ 500.00
- [ ] Deposit $
- ID Type & Number: 305 374 0838
- [ ] Advance Payment $

Thank You ...

We Appreciate Your Business!

Your payment will be posted to your BellSouth account within seconds.

SEARS ADVENTR 2
35F PA 7 0442 12/01/98 -500.00 CK
AVN 305-374-0838-360 0441

In order to save time in the future, please bring your telephone bill.... or you may Mail Your Payment.

Ply 1 - Customer's Copy Ply 2 - Agency's Copy

Fedex

BELLSOUTH

No Document Payment Receipt

RF-9343 (11-96)

Area Code	Telephone Number	Customer Code	Check Digit
305	374 · 0838	360	

Billing Name: ABA PROFESSIONAL

Street Address: 1101 BRICKELL AVE

City: MIAMI State: Fl. Zip Code: 33231

Please Check One

- [x] Payment $ 1283.89
- [ ] Deposit $
- ID Type & Number
- [ ] Advance Payment $

Thank You ...

We Appreciate Your Business!

Your payment will be posted to your BellSouth account within seconds.

SEARS CHI
WP PA 1 0442 12/01/98 1283.89 CKH
AVN 305-374-0838-360 0441

In order to save time in the future, please bring your telephone bill.... or you may Mail Your Payment.

Ply 1 - Customer's Copy Ply 2 - Agency's Copy

Att: Ms. Gayle Phillips

Printed by Nancy Cortijo-Simmonds 12/23/98 5:02pm

for the recurring monthly charges. 105

Mr. Lora agreed to place the orders and provide Ms. Powanda the information required to convert the four numbers back to analog service.

Following is information concerning equipment that the customer purchased from BellSouth in association with the ISDN service:

The customer purchased telephone equipment from us at the end of July. The system is ISDN compatible, but unable to support network features that Mr. Lora is requesting. Ms. Connie Page, supervisor, spent many hours on the phone with Mr. Lora and also with technical support trying to satisfy his needs. Unfortunately, we can not meet his needs, so we have agreed to take the system back and adjust the order to reflect no charge for the equipment. The equipment order totaled $5,489.11. $100 $3000.00

1989.36
5489.11
7478.47

ABA PROFESSIONAL ASSOCIATION INC.

801 BRICKELL BAY DRIVE
TOWER #4 SUITE #662 MIAMI FL., 33131

CAME TO AGREEMENT WITH BELL SOUTH REPRESENTATIVES THAT DOLLAR AMOUNT WAS A MOOT ISSUE. HENCE WE OBTAIN LETTER WHICH DEPICTED THE DATES NOT THE AMOUNTS.

MEANWHILE INDEPENDENTLY WE DISCOVER THE CREATION OF NUMEROUS ACCOUNTS AND RESOLVE MANY ON OUR OWN.

BECAUSE THE TIME FRAME IS THE ISSUE THOSE PAYMENTS MADE DURING THOSE TIME FRAME SHALL BE REFUND OR CREDITED TO THE PRESENT ACCOUNT. BELL SOUTH IS SAYING THAT THEY CREDIT THE ACCOUNTS WITH THOSE BALANCES AT SAID TIME. THEY ARE CHOOSING TO IGNORE THAT THE BALANCES AND CREDITS WOULD HAVE BEEN HIGHER IF WE HAD NOT BEEN COMPEL TO PAY.

THE FACTS ARE CLEAR AND OVERWHELMING CONVINCING. INDISPUTABLE WHEN WE PAID THE BALANCES OWED WE REDUCED THE BALANCES AS WELL AS THE CREDITS DUE. HAD WE NOT BEEN FORCED TO PAY BELL SOUTH WOULD HAVE GIVEN THE CREDITS AT A LATER DATE ACCORDINGLY.

C.E.O.

PLEASE SEE ATTACHED DOCUMENTS

ABA PROFESSIONAL ASSOCIATION INC.

801 BRICKELL BAY DRIVE
TOWER #4 SUITE #662 MIAMI FL., 33131

Phone 1-800-222-4373 USA & Canada
1-800-344-8211 From The Caribbean
800-122-06 From Venezuela
0130-814747 From Germany
046-059416 From Switzerland

FAX 1-800-442-0497 From USA, Canada, & Caribbean ELSEWHERE 305-374-0497
LOCAL NUMBERS 305- 374-3131, 374-3162, 374-6404 374-0838,

E-MAIL ABAHERE@WORLDNET.ATT.NET

FEBRUARY 23, 199

PUBLIC SERVICE COMMISSION
C/O NANCY SIMMONDS
VOICE 1-800-342-3552
FAX 800-511-0809.

REPORT #28

SUBJECT : EXCEPTION & RESPONSE TO PATRICIA A. GODSILS REPORT. .

DEAR MS SIMMONDS I AM IN RECEIPT OF THE REPORT FAXED TO US FROM PATRICIA A GODSIL . IT IS ESSENTIAL TO ADDRESS THE FACTS OF THIS NEW CLAIM WHICH ARE AS PER MS GODSIL EXPLAINS NOT ASSOCIATED WITH PRIOR.

THE CLAIM IS SIMPLE DURING THE TIME FRAME OF 8/31 TO 12/31 WE WERE BILLED FOR THE ISDN, AND OTHER ACCOUNTS CREATED BY BELL SOUTH TO CORRECT THEIR ERRORS, WHEN WE MADE OUR FIRST COMPLAIN BELL SOUTH DISPATCH AN ISDN REPRESENTATIVE ANITA BRYANT WHOM CHOSE TO MAKE A REPORT WHICH WAS PATENTLY FALSE ON.

COINCIDENTALLY ?????. ON THE FOLLOWING DAY OUR SERVICE WAS INTERRUPTED. WE CONTACTED BELL SOUTH REP MS, D. PHILLIPS WHOM COMPEL US TO PAY TO RE STORE SERVICE. (SEE ATTACHED RECEIPTS).
WE HAD NO CHOICE WE HAD TO PAY.

WE THEN REQUESTED A FORMAL COMPLAIN WHICH YOU ISSUED ACCORDINGLY. THIS ACTION AFFORDED THE OPPORTUNITY TO NEGOTIATE. WE THEN WORKED WITH ELENA POWANDA WITH WHOM WE RESOLVE SOME OF OUR DISPUTES.

WE REALIZED WE COULD NOT RESOLVE ALL MATTERS UNLESS WE DEFINE THE DATES OF COMPLICATION RATHER THAN THE AMOUNTS, WITH THIS IN MIND WE

2-26-99

STATE OF FLORIDA

PUBLIC SERVICE COMMISSION

2540 SHUMARD OAK BOULEVARD
TALLAHASSEE, FL 32399-0850

TO:

Sherry Coxe / BellSouth

1-305-350-9091

FROM:

Nancy Cortijo-Simmonds

Fax: 1-800-511-0809 or by E-mail at ncortijo@psc.state.fl.us.

Voice: (850) 413-6137

RE:

ABA 237627R

Note: 9 pgs included.
original to follow
only fax was received

PAID	PAID	PAID	PAID	PAID	ADJ
ADJ	ADJ	ADJ	ADJ	ADJ	BAL
BAL	BAL 330.30	BAL	BAL	BAL	OC&C
OC&C	OC&C	OC&C	OC&C	OC&C	
DA	DA	DA	DA	DA	DA
CCG 330 30	CCG 63.92cl	CCG	CCG	CCG	CCG
TOT 330.30	TOT 266.38	TOT	TOT	TOT	TOT
DA CLM	DA CLM	DA CLM	DA CLM	DA CLM	DA CLM
+LPC(DA)	+LPC(DA)	+LPC(DA)	+LPC(DA)	+LPC(DA)	+LPC(DA)
TOT CLM 330.30	TOT CLM 266.38	TOT CLM	TOT CLM	TOT CLM	TOT CLM
LS DUE	LS DUE	LS DUE	LS DUE	LS DUE	LS DUE
6-1-98	7-1-98				

BL DTE	BL DTE	BL DTE	BL DTE	BL DTE	BL DTE
LST BL	LST BL	LST BL	LST BL	LST BL	LST BL
PAID	PAID	PAID	PAID	PAID	PAID
ADJ	ADJ	ADJ	ADJ	ADJ	ADJ
BAL	BAL	BAL	BAL	BAL	BAL
OC&C	OC&C	OC&C	OC&C	OC&C	OC&C
DA	DA	DA	DA	DA	DA
CCG	CCG	CCG	CCG	CCG	CCG
TOT	TOT	TOT	TOT	TOT	TOT
DA CLM	DA CLM	DA CLM	DA CLM	DA CLM	DA CLM
+LPC(DA)	+LPC(DA)	+LPC(DA)	+LPC(DA)	+LPC(DA)	+LPC(DA)
TOT CLM	TOT CLM	TOT CLM	TOT CLM	TOT CLM	TOT CLM
LS DUE	LS DUE	LS DUE	LS DUE	LS DUE	LS DUE

305 - 375 - 2075 - 6060

PAID	PAID	PAID 1783.84	PAID	PAID	PAID
ADJ	ADJ	ADJ	ADJ 4204.62	ADJ	ADJ
BAL	BAL	BAL 2715.96	BAL 0	BAL	BAL
OC&C	OC&C	OC&C	OC&C	OC&C	OC&C
ATT 1143.03	Hold 35.00	ATT 708.86	ATT 83.67		
Telecom 8.40		LRC 29.93	HOLD 35.00		
HOLD 35.00		HOLD 99.21			
DA	DA	DA	DA	DA	DA
CCG 2701.45	CCG 1798.40	CCG 1488.66	CCG 130.20	CCG	CCG
TOT 2701.45	TOT 4499.85	TOT 4204.62	TOT 130.20	TOT	TOT
DA CLM	DA CLM	HOLD DA CLM 70.00	DA CLM	DA CLM	DA CLM
+LPC(DA)	+LPC(DA)	+LPC(DA)	+LPC(DA)	+LPC(DA)	+LPC(DA)
TOT CLM 2701.45	TOT CLM 4499.85	TOT CLM 4204.62	TOT CLM 13	TOT CLM	TOT CLM
LS DUE 10-14-98	LS DUE 11-14-98	LS DUE 12-14-98	LS DUE 1-14-99	LS DUE	LS DUE

BL DTE 1-14-99	BL DTE	BL DTE	BL DTE	BL DTE	BL DTE
LST BL 994.68	LST BL	LST BL	LST BL	LST BL	LST BL
PAID	PAID	PAID	PAID	PAID	PAID
ADJ 954.75	ADJ	ADJ	ADJ	ADJ	ADJ
BAL 1915.41	BAL	BAL	BAL	BAL	BAL
OC&C	OC&C	OC&C	OC&C	OC&C	OC&C
ATT 173.47					
DA	DA	DA	DA	DA	DA
CCG 1863.92	CCG	CCG	CCG	CCG	CCG
TOT 1863.92	TOT	TOT	TOT	TOT	TOT
DA CLM + Rec chsr from DMO	DA CLM	DA CLM	DA CLM	DA CLM	DA CLM
+LPC(DA)	+LPC(DA)	+LPC(DA)	+LPC(DA)	+LPC(DA)	+LPC(DA)
TOT CLM 1929.16	TOT CLM	TOT CLM	TOT CLM	TOT CLM	TOT CLM
LS DUE 1-14-99	LS DUE	LS DUE	LS DUE	LS DUE	LS DUE

305-374-0838-360 / 305-374-0497-361

NO. 254 11:13 03/02/99

PAID	PAID	PAID	PAID	PAID	PAID
ADJ	ADJ	ADJ	ADJ	ADJ	ADJ
BAL	BAL	BAL	BAL	BAL	BAL
OC&C	OC&C	OC&C	OC&C	OC&C	OC&C
DA	DA	DA	DA	DA	DA
CCG	CCG	CCG	CCG	CCG	CCG
TOT	TOT	TOT	TOT	TOT	TOT
DA CLM	DA CLM	DA CLM	DA CLM	DA CLM	DA CLM
+LPC(DA)	+LPC(DA)	+LPC(DA)	+LPC(DA)	+LPC(DA)	+LPC(DA)
TOT CLM	TOT CLM	TOT CLM	TOT CLM	TOT CLM	TOT CLM
LS DUE	LS DUE	LS DUE	LS DUE	LS DUE	LS DUE

BL DTE	BL DTE	BL DTE 9-14-98	BL DTE 10-14-98	BL DTE	BL DTE
LST BL	LST BL	LST BL	LST BL 1241.14	LST BL	LST BL
PAID	PAID	PAID	PAID -0-	PAID	PAID
ADJ	ADJ	ADJ 1206.13	ADJ	ADJ	ADJ
BAL	BAL	BAL 1206.13	BAL 1241.14	BAL	BAL
OC&C	OC&C	OC&C	OC&C	OC&C	OC&C
		Echard 59.90			
		web			
DA	DA	DA	DA	DA	DA
CCG	CCG	CCG 35.01	CCG .54	CCG	CCG
TOT	TOT	TOT 1241.14	TOT 1241.68	TOT	TOT
DA CLM	DA CLM	DA CLM	DA CLM	DA CLM	DA CLM
+LPC(DA)	+LPC(DA)	+LPC(DA)	+LPC(DA)	+LPC(DA)	+LPC(DA)
TOT CLM	TOT CLM	TOT CLM	TOT CLM	TOT CLM	TOT CLM
LS DUE	LS DUE	LS DUE 1241.14	LS DUE 1241.68	LS DUE	LS DUE
		9-98	10-98		

305-374-0497-618

NO. 054

PAID	PAID 0	PAID	PAID	PAID	PAID
ADJ	ADJ	ADJ 86.00	ADJ	ADJ	ADJ
BAL —	BAL 1050.81	BAL	BAL	BAL	BAL
OC&C	OC&C	OC&C	OC&C	OC&C	OC&C
VSP 33.77	VSP 33.77				
ATT 107.14	ATT 42.54				
DA	DA	DA	DA	DA	DA
CCG 1050.81	CCG 582.50	CCG	CCG	CCG	CCG
TOT 1050.81	TOT 1633.31	TOT	TOT	TOT	TOT
DA CLM	DA CLM	DA CLM	DA CLM	DA CLM	DA CLM
+LPC(DA)	+LPC(DA)	+LPC(DA)	+LPC(DA)	+LPC(DA)	+LPC(DA)
TOT CLM	TOT CLM	TOT CLM	TOT CLM	TOT CLM	TOT CLM
LS DUE 1050.81	LS DUE 1633.31	LS DUE	LS DUE	LS DUE	LS DUE
1-99	2-99				

BL DTE	BL DTE	BL DTE	BL DTE	BL DTE	BL DTE
LST BL	LST BL	LST BL	LST BL	LST BL	LST BL
PAID	PAID	PAID	PAID	PAID	PAID
ADJ	ADJ	ADJ	ADJ	ADJ	ADJ
BAL	BAL	BAL	BAL	BAL	BAL
OC&C	OC&C	OC&C	OC&C	OC&C	OC&C
DA	DA	DA	DA	DA	DA
CCG	CCG	CCG	CCG	CCG	CCG
TOT	TOT	TOT	TOT	TOT	TOT
DA CLM	DA CLM	DA CLM	DA CLM	DA CLM	DA CLM
+LPC(DA)	+LPC(DA)	+LPC(DA)	+LPC(DA)	+LPC(DA)	+LPC(DA)
TOT CLM	TOT CLM	TOT CLM	TOT CLM	TOT CLM	TOT CLM
LS DUE	LS DUE	LS DUE	LS DUE	LS DUE	LS DUE

03/02/99 11:12

305-374-3131-710

Is your RETURN ADDRESS completed on the reverse side?

SENDER:

- Complete items 1 and/or 2 for additional services.
- Complete items 3, 4a, and 4b.
- Print your name and address on the reverse of this form so that we can return this card to you.
- Attach this form to the front of the mailpiece, or on the back if space does not permit.
- Write *"Return Receipt Requested"* on the mailpiece below the article number.
- The Return Receipt will show to whom the article was delivered and the date delivered.

I also wish to receive the following services (for an extra fee):

1. ☐ Addressee's Address
2. ☐ Restricted Delivery

Consult postmaster for fee.

3. Article Addressed to:
Mr. Mannuel Lora
ABA Professional Association Inc
801 Brickell Bay Drive
Tower-4, Suite #662
Miami, Florida 33131

4a. Article Number
242582936 2

4b. Service Type
☐ Registered ☐ Certified
☐ Express Mail ☐ Insured
☐ Return Receipt for Merchandise ☐ COD

7. Date of Delivery
6/23/99

5. Received By: *(Print Name)*

6. Signature: *(Addressee or Agent)*
X

8. Addressee's Address *(Only if requested and fee is paid)*

PS Form 3811, December 1994

Domestic Return Receipt

Thank you for using Return Receipt Service.

UNITED STATES POSTAL SERVICE

First-Class Mail
Postage & Fees Paid
USPS
Permit No. G-10

● Print your name, address, and ZIP Code in this box ●

Florida Public Service Commission
2540 Shumard Oak Boulevard
Tallahassee, Florida 32399-0850

CMU-Sue Ollila

JUN 28 1999

A4. SERVICE CHARGES

A4.4 Dual Service

A4.4.1 General

A. Dual Service is a service offering which supplies the same dial tone concurrently to two different addresses served from the same wire center for a limited period of time (90 days maximum) for nondesigned services only. The provision of Dual Service assures the customer continual service at both locations during the time of a move.

B. A request for Dual Service occurs on orders for a transfer of service (T&F) within the same wire center where no telephone number change is involved.

C. Dual Service will be offered subject to the availability of facilities and technical limitations.

D. Payment for Dual Service is provided for by billing the nonrecurring charge following plus the applicable portion of the monthly rate on both lines during the period of service overlap, regardless of the duration of that overlap (90 days maximum).

A4.4.2 Rates and Charges

A. Exchange Access Line

1. Per line, trunk or main station line

		Nonrecurring Charge	USOC
(a)	Residence	$20.00	NA
(b)	Business	20.00	NA

A4.5 Reserved for Future Use

A4.6 Reserved for Future Use

A4.7 Link-Up

A4.7.1 General

A. Link-Up is a program designed to increase the availability of telecommunications services to low income subscribers by providing a credit to the non-recurring installation and service charges to qualifying low income residential subscribers. Basic terms and conditions are in compliance with the FCC's Order on Universal Service in Docket 97-157, which adopts the Federal-State Joint Board's recommendation in Docket 96-45, which complies with the Telecommunications Act of 1996. Specific terms and conditions are as prescribed by the Florida Public Service Commission and are as set forth in this tariff.

B. Link-Up is supported by the federal universal service support mechanism.

C. A federal credit amount of fifty percent (50%) of the non-recurring charges for connection of service, up to a maximum of $30.00, is available to be passed through to the subscriber.

A4.7.2 Regulations

A. General

1. Customers eligible under Link-Up are also eligible for monthly recurring assistance under the Lifeline program
2. Link-Up connection assistance is available per household and is applicable to the primary residential connection only.
3. The Link-Up credit is available each time the customer installs or relocates the primary residential service.
4. To receive the credit, the named subscriber to the service must provide proof of eligibility prior to installation of service.
5. The total tariffed charges for connecting service, including service and other installation charges, are considered in the credit calculation.
6. The non-discounted federal credit amount will be passed along to resellers ordering local service at the prescribed resale discount from this Tariff, for their eligible end users. Eligible carriers, as defined by the FCC, are required to establish their own Link-Up programs.

A4. SERVICE CHARGES

A4.3 Schedule of Charges for Connecting or Changing Service

A4.3.1 Rates and Charges

	Residence	Business	USOC
A. Line Connection Charge			
1. Applies per exchange access line, trunk, or per NAR for ESSX-1.			
(a) First Line *(per customer request)*	$40.00	$56.00	NA
(b) Additional Line (each)	12.00	12.00	NA
B. Line Change Charge			
1. Applies per exchange access line, trunk, or per NAR for ESSX-1.			
(a) First Line *(per customer request)*	23.00	38.00	NA
(b) Additional Line (each)	11.00	11.00	NA
C. Secondary Service Charge			
1. Applies per customer request			
(a) Each	10.00	19.00	NA
D. Premises Work Charge			
1. First 15-minute increment or fraction thereof			
(a) Per increment	25.00	28.00	NA
2. Each additional 15-minute increment or fraction thereof			
(a) Per increment	9.00	9.00	NA

Material appearing on this page previously appeared on page(s) 5 of this section.
Material previously appearing on this page now appears on page(s) 7 of this section.

A4. SERVICE CHARGES

A4.2 Application of Charges (Cont'd)

A4.2.6 Service Charge Exceptions (Cont'd)

A. Service Charges do not apply for: (Cont'd)

7. The move from a premises which has been destroyed or made untenantable by a disaster such as a hurricane, tornado, fire, flood, etc., when equivalent service is established, at the new/temporary location or for the move back into the original location.
8. Changing telephone numbers when in the judgment of the Company such changes are necessary for continuation of satisfactory service.
9. Requests for establishing toll credit cards. (M
10. Requests for full or partial disconnection. (M
11. Upgrades from Back-Up* Line service to business individual line service.
12. **(DELETED)**

B. When a customer's request is provided:

1. In accordance with a promotional waiver, additional service subject to an equal or lesser Service Charge may be made a part of the promotional service request. Charges for Line Connection, Line Change, or Premises Work will apply, if applicable, for additional service.
2. In accordance with the Service Charge waivers listed in A.2. through 7. preceding, additional features or services subject to the Secondary Service Charge may be made a part of the waiver service request.

C. Service charges for connection, move or change do not apply to telephone service previously provided over a Government System in military housing where there is no break in the continuity of service.

A4.2.7 Installment Billing

A. Except as provided in this paragraph and B. following, service connection, and/or rearrangement charges separately or in combination are required to be paid at the time of application for service. Service may be established in advance of payment of service connection charges for additions to the service of existing subscribers and for any service provided for the use of departments, administrations or agencies of the Federal, State, County or Municipal Government. Service Charges may be paid in monthly installments of not less than the amounts shown below not to exceed a total of more than six months. If additional such charges are incurred while a balance is due on previous charges, the above treatment will apply separately to the new charges.

1. First Month

	Monthly Rate	USOC
(a) Residence	$15.00	NA
(b) Business	25.00	NA
2. Subsequent Months		
(a) Residence	5.00	NA
(b) Business	5.00	NA

Material appearing on this page previously appeared on page(s) 4 of this section.

* Service Mark of BellSouth Corporation

A4. SERVICE CHARGES

A4.2 Application of Charges (Cont'd)

A4.2.4 Secondary Service Charge Application (Cont'd)

C. The Secondary Service Charge applies for: (Cont'd)

5. Changing call referrals to another number at the customer's request.

D. The Secondary service Charge is also applicable:

1. When installing or changing a station line or changing a station number on ESSX-1 service.
2. When adding or changing the operation of a NAR on ESSX® service, Digital ESSX® service, Centrex service or MultiServ PLUS* service.

E. Beginning December 1, 1995 and ending November 30, 1996, a special waiver of the Secondary Service Charge will apply when residence subscribers order one or more of the following services. Custom Calling services, Message Waiting Indication service, Prestige® Communications service, TouchStar® service, Designer Listings or RingMaster® service.

A4.2.5 Premises Work Charge Application

A. The appropriate Line Connection Charge, Secondary Service Charge or Line Change Charge applies in addition to the Premises Work Charge.

B. Premises Work Charges apply per customer request, per Company employee performing billable work on the customer's premises. The sum of their time is used to determine the number of 15-minute increments to be billed. Only one initial increment is to be billed per customer request except when the customer specifically requests more employees than the Company would normally dispatch. Where additional employees are specifically requested by the customer, the initial increment charge will also apply per additional Company employee specifically requested.

C. Premises Work Charges apply:

1. For, but not limited to, rearrangement of drop wire, protector and/or network interface.

D. The charge for a Network Interface jack applies in addition to the appropriate Premises Work Charges for installing a Network Interface at the customer's request on existing service.

A4.2.6 Service Charge Exceptions

A. Any additional work done concurrently with the following excepted work will entail service charges applicable to that work.

B. Service Charges do not apply for:

1. Adding Touch-Tone Service when no other services are requested.
2. Changing from a private or semiprivate listing to a listed number.
3. Requests for establishing toll credit cards.
4. Requests for full or partial disconnection.
5. Changing from one flat, meseared or message rate basic service (including Area Plus® service and Complete Choice* options) to another.

®Registered Service Mark of BellSouth Corporation
*Service Mark of BellSouth Corporation

A4. SERVICE CHARGES[1] (N)

A4.2 Application of Charges (Cont'd) (N)

A4.2.6 Service Charge Exceptions (Cont'd) (N)

C. Service charges for connection, move or change do not apply to telephone service previously provided over a Government System in military housing where there is no break in the continuity of service. (N)

A4.2.7 Installment Billing (N)

A. Except as provided in this paragraph and B. following, service connection, and/or rearrangement charges separately or in combination are required to be paid at the time of application for service. Service may be established in advance of payment of service connection charges for additions to the service of existing subscribers and for any service provided for the use of departments, administrations or agencies of the Federal, State, County or Municipal Government. Service Charges may be paid in monthly installments of not less than the amounts shown below not to exceed a total of more than six months. If additional such charges are incurred while a balance is due on previous charges, the above treatment will apply separately to the new charges. (N)

1. First Month (N)

	Monthly Rate	USOC	
(a) Residence	$15.00	NA	(N)
(b) Business	25.00	NA	(N)
2. Subsequent Months			(N)
(a) Residence	5.00	NA	(N)
(b) Business	5.00	NA	(N)

Note 1: The changes on this page are a result of the restructure of this section. (N)

* d/b/a SOUTHERN BELL TELEPHONE AND TELEGRAPH COMPANY

A4. SERVICE CHARGES (T)

A4.2 Application of Charges (Cont'd)

A4.2.3 Line Change Charge Application (Cont'd)

D. The Line Change Charge applies: (Cont'd)

2. For each change of station number for Centrex-CO, ESSX® service, Digital ESSX® service, MultiServ* service and MultiServ PLUS* service, and for each change in the operation of a NAR for ESSX-1. This charge is applicable in addition to the appropriate charge for station number changes when a change of basic exchange telephone number is requested coincident with a change of station number.
3. For each line or trunk, or for each NAR on ESSX-1 being restored after service is temporarily denied for nonpayment.
4. For each line or trunk, for each NAR on ESSX-1 being temporarily suspended at the request of a customer.
5. For changing from loop start to ground start and vice versa and for changing from a line to a trunk and vice versa, for changes in direction, etc.
6. For changing from Foreign Central Office Service to home wire center and vice versa.

A4.2.4 Secondary Service Charge Application

A. The Secondary Service Charge will not apply if a Line Connection Charge or Line Change Charge is applicable.

B. The Secondary Service Charge applies for adding or rearranging:

1. Custom Calling Service
2. Prestige® Communications service
3. Grouping Service
4. RingMaster® service
5. TouchStar® service
6. Customized Code Restriction
7. Customer requested directory listing changes
8. Remote Call Forwarding
9. Other features or services for which the Line Connection Charge and Line Change Charge are not applicable. (T)

C. The Secondary Service Charge applies for:

1. Transfers of responsibility.
2. Changing from residence to business service and vice versa. The business charge applies when changing to business and the residence charge applies when changing to residence. If the telephone number changes the Line Change Charge applies in lieu of the Secondary Service Charge.
3. Rearrangement of drop wire, protector, and/or network interface. Additionally, Premises Work Charges will apply.
4. Installing a Network Interface jack, at the customer's request, on existing service. Additionally, Premises Work Charges will apply. (T)

®Registered Service Mark of BellSouth Corporation
* Service Mark of BellSouth Corporation

A4. SERVICE CHARGES

A4.2 Application of Charges (Cont'd)

A4.2.3 Line Change Charge Application (Cont'd)

D. The Line Change Charge applies: (Cont'd)

4. For each line or trunk, for each NAR on ESSX-1 being temporarily suspended at the request of a customer.
5. For changing from loop start to ground start and vice versa and for changing from a line to a trunk and vice versa for changes in direction, etc..
6. For changing from Foreign Central Office Service to home wire center and vice versa.

A4.2.4 Secondary Service Charge Application

A. The Secondary Service Charge will not apply if a Line Connection Charge or Line Change Charge is applicable.

B. The Secondary Service Charge applies for adding or rearranging:

1. Custom Calling Service
2. Prestige® Communications service
3. Grouping Service
4. RingMaster® service
5. TouchStar® service
6. Customized Code Restriction
7. Customer requested directory listing changes
8. Remote Call Forwarding
9. Other features or services for which the Line Connection Charge and Line Change Charge are not *applicable*. (T

C. The Secondary Service Charge applies for:

1. Transfers of responsibility.
2. Changing from residence to business service and vice versa. The business charge applies when changing to business and the residence charge applies when changing to residence. If the telephone number changes the Line Change Charge applies in lieu of the Secondary Service Charge.
3. Rearrangement of drop wire, protector, and/or network interface. Additionally, Premises Work Charges will apply.
4. Installing a Network Interface jack at the customer's request on existing service. Additionally, Premises Work Charges will apply.
5. Changing call referrals to another number at the customer's request.

D. The Secondary Service Charge is also applicable:

1. When installing or changing a station line or changing a station number on ESSX-1 service.
2. When adding or changing the operation of a NAR on ESSX® service, Digital ESSX® service or MultiServ PLUS* service. (T

E. Beginning *October 1, 1996*, a special waiver of the Secondary Service Charge will apply when subscribers order one or more of the following services: Custom Calling services, Message Waiting Indication service, Prestige® Communications service, TouchStar® service, Designer Listings, ***Customized Code Restriction, Remote Call Forwarding*** or RingMaster® service. (C

A4.2.5 Premises Work Charge Application

A. The appropriate Line Connection Charge, Secondary Service Charge or Line Change Charge applies in addition to the Premises Work Charge.

®Registered Service Mark of BellSouth Corporation
* Service Mark of BellSouth Corporation

A4. SERVICE CHARGES (T)

A4.2 Application of Charges (Cont'd)

A4.2.1 General (Cont'd)

A. Except as provided hereinafter, the following are subject to service charges: (Cont'd)

5. Mobile Telephone Service, except Bellboy service pagers
6. Telephone Answering Service
7. Miscellaneous service arrangements and auxiliary equipment

B. For Mobile Telephone Service the appropriate Business service charges are applicable. (C)

C. The Line Connection Charge includes a standard voice miniature six position network interface for simple type services which do not require other network interfaces. See Section A14. for FCC approved network interfaces.

D. Installation charges throughout this Tariff may be applicable in addition to the charges in this section.

E. Service charges may be required to be paid at the time of application for service.

A4.2.2 Line Connection Charge Application

A. The Line Connection Charge First Line is applicable if the customer is requesting only one line or for the first line if multiple lines are being ordered.

B. On multiple line requests, the Line Connection Charge Additional Line applies for each additional line ordered after the first line per customer request.

C. The Line Connection Charge applies:

1. For the connection of an exchange access line or trunk. The charge is applicable per exchange access line or trunk.
2. Per main station line for ESSX® service, Digital ESSX® service, Centrex service, MultiServ* service and MultiServ PLUS* service.
3. Per Network Access Register (NAR) for ESSX-1 service.

A4.2.3 Line Change Charge Application

A. The Line Change Charge First Line is applicable if the customer is requesting changes on only one line or for the first line if changes are being made on multiple lines.

B. On multiple line requests, the Line Change Charge Additional Line applies for each additional line requested changed per customer request after the first line.

C. If the Line Connection Charge First Line applies on a customer request, any additional Line Change Charges applicable for the same customer request will be billed at the Line Change Charge Additional Line rate.

D. The Line Change Charge applies:

1. For each telephone number changed when requested by the customer.

®Registered Service Mark of BellSouth Corporation
*Service Mark of BellSouth Corporation

A4. SERVICE CHARGES (T

A4.1 Definitions

SERVICE CHARGE

Service Charge is a nonrecurring charge or charges applying to the ordering, installing, moving, changing, rearranging or furnishing of telecommunication services or facilities. Service Charges are categorized as:

Line Connection Charge
Line Change Charge
Secondary Service Charge
Premises Work Charge

Line Connection Charge (First Line and/or Additional Line) applies for establishing an exchange access line or trunk. The charge includes service ordering, central office work, exchange access line work and a standard voice miniature six position network interface.

Line Change Charge (First Line and/or Additional Line) applies per line to miscellaneous customer requested changes on existing service for, but not limited to, number change and suspend/restore.

Secondary Service Charge applies per customer request for the receiving, recording, and processing of customer requests to change services or add new or additional services.

Premises Work Charge is a nonrecurring charge based on the labor time and miscellaneous materials required to rearrange the drop wire, protector and/or network interface. (C

CUSTOMER REQUEST

The term "per customer request" as used in this section shall be defined as a customer request for service that is ordered at the same time to be provided on the same date, the same premises, the same system, and the same account.

NETWORK INTERFACE

The network interface is a FCC approved standard registration program jack which is used at the demarcation point as a means of connection between the telecommunications network and the customer's inside wire and/or equipment.

DEMARCATION POINT

The point of demarcation and/or interconnection between Company communications facilities and the customer's terminal equipment, protective apparatus or wiring at a subscriber's premises.[1] Company-installed facilities at, or constituting, the demarcation point shall consist of wire or a jack conforming to Subpart F of Part 68 of the Federal Communications Commission's rules.

A4.2 Application of Charges

A4.2.1 General

A. Except as provided hereinafter, the following are subject to service charges:

1. All classes of Basic Exchange Service
2. ESSX-1 Service
3. ESSX® service/Digital ESSX® service/MultiServ* service/MultiServ PLUS* service
4. Centrex Service

Note 1: Premises is defined in Section A1. of this Tariff.

®Registered Service Mark of BellSouth Corporation
*Service Mark of BellSouth Corporation

ABA PROFESSIONAL ASSOCIATION INC.

801 BRICKELL BAY DRIVE
TOWER #4 SUITE #662 MIAMI FL, 33131

OUR INTENT WAS AT ALL TIMES TO HAVE A BETTER SYSTEM NOT WORST NOR MUCH LESS EFFICIENT. I.E.... WITH ISDN LINE YOU CAN NOT HAVE 3 WAY CALLING, YOU CAN HAVE CONFERENCE CALLING BY USING THE EQUIPMENT. THIS REQUIRES TYING UP " 2 LINES " WHICH IS INCONVENIENT AND NOT FEASIBLE. CERTAINLY NOT IMPROVING.

WHEN WE NOTIFIED THE EQUIPMENT SUPERVISOR MS CONNIE PAGE WE INFORMED HER ACCORDINGLY THAT NEITHER THE EQUIPMENT NOR THE ISDN LINES WOULD ALLOW US TO HAVE THE THINGS WE HAD IN THE PAST. WE FELT WE WERE REGRESSING RATHER THAN PROGRESSING AND THIS CONSUME AND ENORMOUS LENGTH OF TIME. SHE RESEARCHED THIS FOR SEVERAL DAYS WITH ALL THOSE WHOM HAD SOME INPUT IN THE MATTER. THE VENDOR ENGINEERS AND THE NETWORK GROUP. SHE APOLOGIZE BUT THE DAMAGE WAS DONE.

SHE IMMEDIATELY E-MAIL OR SALES PERSON WITHIN BELL SOUTH EQUIPMENT TO WARN THEIR FUTURE CUSTOMERS. I GUESS WE WERE THE GUINEA PIGS. WE ATTEMPTED TO GET THE NETWORKING GROUP TO ASSET BUT SO FAY THEY WERE UNABLE TO AND AGAIN AS USUAL WE DOCUMENTED THOSE INVOLVED.

WE SOON FOUND OUT THAT ONE OF THE PROBLEMS WE WERE HAVING WAS THE MODEMS WHICH ARE THROUGHOUT THE OFFICE CONNECTED TO THE COMPUTERS INDEPENDENTLY SO EACH OPERATOR CAN HAVE INDEPENDENT ACCESS TO THE NUMEROUS DATA BASES WE UTILIZE. BECAUSE OF THE MANY CONFLICTS WE WERE EXPERIENCING WE CONVEY THIS INFORMATION TO THE PROVIDER OF THE ISDN MODEMS WHICH WERE INSTALLED INTERNALLY IN EACH COMPUTER. AFTER SEVERAL DAYS THE SUPPLIER TECHNICAL SUPPORT PERSON CHRIS EXPLAINED THAT FROM ALL OF THE TROUBLE SHOOTING IT WAS APPARENT THAT THERE WAS CONFLICT WITHIN THE ISDN LINES NOT NECESSARILY TH EQUIPMENT. WE THEN REVIEW THE ACESS TIME TO THE INTERNET AND CONFIRMED THAT IT WAS EXCESSIVE.

Equipment N.J

THIS PROMPTED US TO CONTACT THE EQUIPMENT DIVISION WHOM DISPATCHED TECHNICIAN IGNACIO. UPON ARRIVAL HE INSPECTED THE LINES AND FOUND NOTHING TO BE WRONG BUT COMMENTED THAT THEY HAD INSTALLED AN ADAPTER TO THE ISDN LINES WITHIN THE EQUIPMENT CONVERTING THE ISDN LINES WHICH WE REQUESTED AND WERE BEING BILLED FOR BACK TO ANALOG.

WHILE MS ANITA BRYAN CAN NOT AVOID THE ISSUE OF THE FAILURE OF THE COMPATIBILITY OF THE FEATURES TO WHAT WE ORIGINALLY HAD SHE STATED THAT WE SHOULD REMOVE THIS PART OR PIECE OF EQUIPMENT THAT IS BOTTLENECKING OUR ISDN (DIGITAL) MODEMS WHICH WE HAD PURCHASE TO WORK IN TOGETHER WITH THE LINES WE HAD ORDER.

ABA PROFESSIONAL ASSOCIATION INC.

801 BRICKELL BAY DRIVE
TOWER #4 SUITE #662 MIAMI FL, 33131

CALL WAITING, CONFERENCE CALLING, AND FLEXIBLE REMOTE . HENCE WHEN WE WERE APPROACHED BY BELL SOUTH REPRESENTATIVE ABOUT THE PURCHASE OF NEW EQUIPMENT I EXPRESS OUR INTEREST AS LONG AS WE CAN ENHANCE OUR SYSTEM TO BETTER SERVICE OUR CUSTOMERS. THE SALES PERSON SARA RUIZ ASSURED US THAT THE SYSTEM AND EQUIPMENT WOULD BE THE STATE OF THE ART AND IT WOULD IMPROVE TREMENDOUSLY OUR OPERATIONS. I PROVIDED HER WITH ALL THE TELEPHONE NUMBERS AND SOON THEREAFTER SHE ASSURED ME BECAUSE OF A NEW PROMOTION WE WOULD NOT BE CHARGE THE INSTALLATION FEES.

THE LINES WHERE NEVER INSTALLED ON THE DATES OF COMMITMENT BY THE TELEPHONE COMPANY WHEN THEY FINALLY CAME AROUND TO DO IT I HAD OBTAIN ASSURANCE FROM MS DOLORES WHOM WAS OR IS A LIAISON OR COORDINATOR FOR BELL SOUTH AND VENDOR NORTEL THAT THEY WOULD CONVERT LINES AS I HAD REQUESTED ONE AT A TIME. ON THE DAY OF INSTALLATION THE SAME LADY THAT WAS HERE TODAY WITH MS BRYANT STATED THAT HER ORDERS REQUIRE TERMINATION OF ALL ANALOGS LINES AT THE SAME TIME. THE PROMISED I HAD BEEN GIVEN TO CONVERT THE LINES TO ISDN ONE AT A TIME WAS IGNORED IN IT'S ENTIRETY.

WITHIN A FEW MINUTES WE HAD NO SERVICE AND THE LADY HAD DEPARTED THE OFFICE COMPLEX. AT AROUND 11 PM I WAS ABLE TO GET A BELL REPRESENTATIVE TO FORWARD LINES TO MY CELLULAR PHONE WHICH OFTEN HAD DEAD BATTERIES TO IT'S OVER USE. WE WERE OUT OF SERVICE FOR 2 DAYS CONSECUTIVELY. SOON AFTER THE TECHNICIAN IGNACIO DETERMINED THE EQUIPMENT WAS DEFECTIVE NEW PARTS WERE ORDER AND A FEW WEEKS LATER ANOTHER ATTEMPT WAS MADE TO AGAIN CONVERT THE LINES TO ISDN .

THIS TIME THEY ABIDED BY MY REQUEST TO CONVERT ONE LINE AT A TIME. MORE THAN OFTEN MR. IGNACIO WAS PROHIBITED FROM COMPLETING THE JOB HE WAS DISPATCH TOP OTHER JOBS WHICH THEY FELT HAD MORE PRIORITY.

DURING THIS ORDEAL WE WERE ABLE TO FIND OUT AND DOCUMENT FROM OTHER SOURCES WITHIN BELL SOUTH THAT THE EMPLOYEES ARE NOT WELL TRAINED FOR THIS TYPE OF WORK AND FEW ARE FAMILIAR WITH THE TYPE OF EQUIPMENT THEY INSTALLED IN OUR OFFICE.

UNEQUIVOCALLY WE FOUND OUT AT SOME POINT THAT THE FEATURE OR OPTIONS WE HAVE HAD SINCE THE INCEPTION OF THIS FIRM WERE NOT ABLE NOR COULD THEY GET IT FROM THE VENDOR OF THE PHONE SYSTEM.

ABA PROFESSIONAL ASSOCIATION INC.

801 BRICKELL BAY DRIVE
TOWER #4 SUITE #662 MIAMI FL, 33131

Phone 1-800-222-4373 USA & Canada
1-800-344-8211 From The Caribbean
800-122-06 From Venezuela
0130-814747 From Germany
046-059416 From Switzerland

His accounts
But complaint RE: Local #'s
which is o·k

FAX 1-800-442-0497 From USA, Canada, & Caribbean ELSEWHERE 305-374-0497
LOCAL NUMBERS 305- 374-3131, 374-3162, 374-6404 374-0838,

E-MAIL ABAHERE@WORLDNET.ATT.NET

DECEMBER 6, 1998

PUBLIC SERVICE COMMISSION
DEAR MS TARRAH. GORDON
CAROL

VOICE 1-800-342-3552
FAX 800-511-0809

SUBJECT : COMPLAIN ON ISDN / ANALOG SERVICE FOR THE FOLLOWING ACCOUNTS 305-374-0838, 374-3131, 374-3162 OUR CUSTOMER FOR ISDN IS ID#112615001

Called Bell South for Customer

DEAR MS CAROL I TAKE THIS OPPORTUNITY TO THANK YOU FOR YOUR PROMPT ATTENTION. SHORTLY AFTER ME CONTACTING YOU A FEMALE NAMED ANITA BRYANT VISITED OUR LOCATION REPRESENTING THE BELL SOUTH NETWORK DIVISION.

SHE IMMEDIATELY POINTED OUT THAT SHE REPRESENTS THE NETWORKING SIDE AND HER UNIT OPERATES INDEPENDENTLY FROM ALL OTHER BELL DIVISIONS OR ENTITIES. SHE CLEARLY STATED THAT WHILE THIS CONFUSES CUSTOMERS IT IS THE GOVERNMENTS AGENCIES FAULT FOR COMPELLING THEM TO OPERATE INDEPENDENTLY AND NOT AS A WHOLE UNIT.

SHE THEN POINTED TO THE DOOR THAT THEIR LINES WHICH ARE ISDN ARE IN PLACE FUNCTIONING.

TO SIMPLIFY MATTERS I LIMITED OUR CONVERSATION TO TWO ISSUES RATHER ALL THE OTHER RELEVANT MATTER WHICH ARE DOCUMENTED BY ME IN MANY REPORTS DURING AND THROUGHOUT THE CONVERSION OF THE ANALOG LINES TO ISDN. AND I STATED THE FOLLOWING.

WE HAVE BEEN DOING BUSINESS SINCE 1985 AS THE RECORDS CONVINCINGLY INDICATES SINCE THE IMMEMORIAL DAY OF THIS FIRM WE HAVE ALWAYS HAD.

374-3131

September 16, 1998

A; B, A Travel Group
801 Brickell Bay Dr.
Suite 662
Miami, Fl. 33131

Dear Mr. Lora:

Per our conversation on Tuesday, September 15, 1998, the following features are not tariffed for ISDN service:

Call Waiting
Flexible Call Forwarding
Remote Access to Call Forwarding
Fax Overflow Service

I have processed a Special Service Arrangement Request Form, document SF98-5156-00, to request the feasibility and pricing of these features. This process will take approximately 2 weeks. I will follow up with a contract when the Agreement has been processed.

If you require any additional information, please fax me a request at 1-800-330-5170.

Sincerely,

Elena Powanda
Project Manager II

374-3131

Memorandum

To: Mr. Manwell Lora

From: Doris W. Freeman

Date: 11/03/98

Re: Repair Service Representative

Mr. Lora,

This Memorandum acknowledges that we discussed problems that you encountered with Angela Barnes checking on trouble ticket 468610.

Angela was informally counseled at that time.

BellSouth Business appreciates your business. It is our goal to provide Excellent Customer Service. To obtain this goal we know it requires the Best employees servicing our customers.

BELLSOUTH

BellSouth
Communication Systems
5555 Windward Parkway, Suite B
Alpharetta, Georgia 30201-3895

Manuel Lora
ABA Professional Association Inc.
1101 Brickell Ave.
Miami, FL 33131

Dear Mr. Lora:

We at BellSouth Communications Systems apologize for all the inconvenience caused during the process of replacing your analog lines to digital and the installation of the Norstar System. We know what it means to an organization like yours to be two days without communications. We have done everything in our power to solve the problem and have you up and running. Again we apologize for the inconvenience to you and your customers.

Sincerely,

Sara Ruiz
Account Executive

With BellSouth's colorful array of business solutions, you can always be there for your customer's needs

8 B's + 4 D's = 12

Save up to $1110 — ISDN PRI Voice/Data (Contracts of 24 + Months)
- Free installation of ISDN PRI

Save up to $255 — ISDN BRI (Contracts of 24 + Months)
Free installation of ISDN BRI - 2 B's + Data - 1 D Channel

Save up to $2225 — Frame Relay (Contracts of 24 + Months)
- Free installation of Frame Relay

Save up to $1400 — Channelized Megalink* (Contracts of 24 + Months)
Free installation of Megalink* Channel Service

TO: Valued CSR / ABA Prof Assn
FAX #: 3053740497
Fax Overflow #: 3056313979

You should receive 2 pages including this cover sheet.

This fax cover sheet is provided to subscribers of BellSouth Business Fax Services Fax Overflow service. It acknowledges that the following pages were delayed in transmission to you because your fax machine was busy, out-of-paper, temporarily out-of-order, or shut off.

Thank you for using BellSouth Business Fax Services Fax Overflow service. If you have questions or need assistance, please call our Customer Service department at 1-800-986-9488.

FAX ID: 4pu77921
Received: 7/30/98 01:38 PM
Printed: 7/30/98 02:11 PM

BellSouth.net Packaged Fractional Frame Relay Access (Contracts of 24 + Months)

Save up to $1150

- Up to 1.544 Mbps
- Waiver of BellSouth.net service installation charges
- Contract terms of 24 months, last 4 months monthly recurring charges for BellSouth net service waived
- Contract terms of 36 months, last 6 months monthly recurring charges for BellSouth net service waived

BellSouth.net ISDN 128k LAN Dedicated Internet Access w/Shared Web Hosting

Save up to $750

- $200 rebate on BellSouth.net ISDN 128k LAN Internet Access/Shared Web Hosting (when purchased together)
- Netopia 635 ISDN Router available at up to $350+ discount off retail (when purchased with ISDN 128k LAN Access Service)
- $50 Rebate when Web Hosting purchased separately

Call your Account Representative or 1-800-338-6500

Offer good through 9/30/98
Services Available Only Where Facilities Permit

*Service requires ISDN service to operate

Monthly service charges and non-recurring service order charges will apply
Applicable tariffs and/or restrictions, terms, and conditions apply

BELLSOUTH

Payment Receipt

Thank You...

We Appreciate Your Business!

Your payment will post to your BellSouth account within seconds.

37-0838 #354

ABA PROFESSIONAL ASSOCIATION INC.

801 BRICKELL BAY DRIVE
TOWER #4 SUITE #662 MIAMI FL, 33131

Phone 1-800-222-4373 USA & Canada
1-800-344-8211 From The Caribbean
800-122-06 From Venezuela
0130-814747 From Germany
046-059416 From Switzerland

FAX 1-800-442-0497 From USA, Canada, & Caribbean ELSEWHERE 305-374-0497
LOCAL NUMBERS 305- 374-3131, 374-3162, 374-6404 374-0838.

E-MAIL ABAHERE@WORLDNET.ATT.NET

MARCH 8, 1999

PUBLIC SERVICE COMMISSION
C/O NANCY SIMMONDS
VOICE 1-800-342-3552
FAX 800-511-0809.

COMPLAINT #237627R CONTINUATION.

REPORT #33

SUBJECT : ATTACHED PAID RECEIPTS

PURSUANT TO YOUR CONVERSATION ON THIS DATE WITH MR. LORA , PLEASE FIND ATTACHED RECEIPTS WITH THIS LETTER. AS PREVIOUSLY EXPLAINED MS, PENELAS A COLLECTION SUPERVISOR FROM BELL SOUTH HAS PROVIDED US WITH THE ATTACHED REPORTS WHICH HAVE NO BEARINGS ON THIS NEW COMPLAIN.

WE BASED OUR STATEMENTS AS FOLLOW. WHEN YOU AFFORDED US THE FIRST RESPONSE GIVEN TO YOU BY BELL SOUTH REPRESENTATIVE MS PATRICIA GODSILS VIA FAX FROM THE OFFICE OF BELL SOUTH REGION PRESIDENT. WE REVIEWED IT AND FOUND THAT THE RESPONSE WAS LIMITED.

WE OPTED TO CONTACT MS GODSIL WHOM RIGHTFULLY EXPLAIN THAT THEY FOLLOW BELL SOUTH POLICY TO ONLY ADDRESS ISSUES RAISED BY THE COMPLAINANTS OR COMPLAINING PARTIES. HENCE WE CHOSE TO FOLLOW THEIR STYLE OF RESPONSE TO AVOID CONFUSION AND FURTHER DELAYS.

ABA PROFESSIONAL ASSOCIATION INC.

801 BRICKELL BAY DRIVE
TOWER #4 SUITE #662 MIAMI FL, 33131

KNOWING THIS WE THEN FILED A NEW COMPLAIN WITH YOUR AGENCY. SOON AFTERWARDS WE GOT A FAX FROM MS PENELAS A COLLECTION SUPERVISOR. SHE DID NOT ADDRESS ISSUES OF PAYMENTS BUT FAXED US A RATHER INFORMAL REPORT WITH NUMEROUS ACCOUNTS SOME NOT OURS WITH INFORMATION RELEVANT TO OLD ADVERTISING ACCOUNTS.

WE FELT MS GODSILS COMMITMENT TO BELL SOUTH POLICY WAS MORE APPROPRIATE. SO WHEN WE REVIEW MS PENELAS FAX AND SO NOTHING ASSOCIATED NOR RELEVANT TO THE FACTS WE WERE BAFFLED.

WE DID NOT WANT MS PENELAS OR ANY ONE ELSE TO THINK NOR SUGGEST THAT WE DO NOT WANT TO ADDRESS OTHER ISSUES, HENCE WE RESPONDED ACCORDINGLY AND PROMPTLY.

WE HAVE NO OBJECTION TO GRANT BELL SOUTH A CONTINUATION. THIS TYPE OF ETHICAL PROFESSIONAL COURTESY IS PROPER AND COMMON. EVEN THOUGH BELL SOUTH DID NOT PROVIDED US SUCH COURTESY IN DECEMBER 8, WHEN WE AS CUSTOMER FOR OVER 15 YEARS HAD RIGHTFULLY COMPLAINED TO BELL SOUTH REPRESENTATIVES AND PUBLIC SERVICE COMMISSION OFFICE.

WE HOPE THAT BELL SOUTH WILL PROVIDE US EXTENSIONS WHEN WE ASK FOR THEM.

PLEASE REVIEW ALL ATTACHED RECEIPT FOR TIME FRAME WITHIN THE COMPLAIN WHEREAS BELL SOUTH HAS ALLREADY PROVIDED ALL CREDITS FOR SERVICES, INSTALLATIONS, OCCURING CHARGES, EQUIPMENTS ETC.

SINCERELY YOURS,

GARY MARCELIN

CC: MANUEL LORA
CC: PATRICIA GODSIL
CC: GONZALO DORTA

BELLSOUTH

No Document Payment Receipt

RF-9343 (11-96)

Area Code	Telephone Number	Customer Code	Check Digit
305	374 · 0838	360	

Billing Name: ABA PROFESSIONAL

Street Address: 1101 BRICKELL AVE

City: MIAMI State: Fl. Zip Code: 33231

Please Check One

- [x] Payment $ 1283.89
- [ ] Deposit $
  ID Type & Number
- [ ] Advance Payment $

Thank You ...

We Appreciate Your Business!

Your payment will be posted to your BellSouth account within seconds.

In order to save time in the future, please bring your telephone bill.... or you may Mail Your Payment.

SEARS CPL GB 2
IG PA P [illegible] 1283.89 CRR
PAYM 305-374-0838 [illegible]

Ply 1 - Customer's Copy Ply 2 - Agency's Copy

BELLSOUTH

No Document Payment Receipt

RF-9343 (11-96)

Area Code	Telephone Number	Customer Code	Check Digit
305	374 · 3131	555	

Billing Name: ABA PROFESSIONAL

Street Address: 1101 BRICKELL AVE

City: MIAMI Fl. State: Zip Code: 33231

Please Check One

- [x] Payment $ 343.46
- [ ] Deposit $
  ID Type & Number
- [ ] Advance Payment $

Thank You ...

We Appreciate Your Business!

Your payment will be posted to your BellSouth account within seconds.

In order to save time in the future, please bring your telephone bill.... or you may Mail Your Payment.

SEARS CPL GB 2
IG PA P [illegible] 343.46 CRR
PAYM 305-374-3131 [illegible]

Ply 1 Customer's Copy Ply 2 - Agency's Copy

CONFIRMED

rom: Leroy Rasberry
o: Kate Smith
ubject: fwd: ABA 237627R - Manuel Lora

==NOTE==========7/28/99==5:32pm==========
C: Anne Marsh, Carmen Pena, Leroy Rasberry

.....

ate,

lease process this informal conference request as usual. Issue letter to ustomer and notice to company via CATS form note.

armen/Kate,

nn Marsh in CMU is looking at the file and will be the contact in technical or the customer. I believe it is safe to include her name in the letter as a contact person, should the customer have questions or want to forward additional information. Ann is also the person that will handle the informal conference, should one be necessary (with CAF assistance in moderating the conference).

I will need to get our copy of this case, so we can file it appropriately. Ann is forwarding us copies of the customer's most recent filing.

Fwd=by:=Anne=Marsh====7/29/99==7:54am==========
Fwd to: Carmen Pena, Kate Smith, Leroy Rasberry

.....

Go ahead and include my name. I will wait until after the acknowledgements have been sent, then contact him to let him know what I plan to do. I will be asking him to provide some documentation that we don't have, so it may be a little while before we can acatually schedule a conference.

State of Florida

Public Service Commission

-M-E-M-O-R-A-N-D-U-M-

DATE: April 9, 1999

TO: Walter D'Haeseler, Director, Division of Communications

FROM: Beverlee S. DeMello, Director, Division of Consumer Affairs

RE: Case of ABA Professional Association, Inc., Mr. Manuel Lora, against BellSouth Telecommunications, Inc. (BellSouth) CATS #237627R, improper ISDN charges.

According to Mr. Manuel Lora, he contracted with BellSouth to provide an ISDN line, which was installed, but later BellSouth placed an adapter on the line and changed the capabilities from digital to analog. The customer stated that BellSouth failed to inform him of this change. This change caused operational problems and additional expenses to Mr. Lora as he tried to correct the situation, not knowing that BellSouth had caused the change. He does not feel that he should have been required to continue to pay the higher rate if he was not receiving the service, and believes that a refund is due on the difference between the analog and digital charges.

To date, CAF has obtained a total credit in the amount of $8,022.90:

$1,989.36	**-**	**past installation charges**
5,489.11	**-**	**returned equipment**
544.43	**-**	**an additional line**

However, I believe that CMU is better prepared to decipher the customer's billing issues and provide a final resolution of his complaint.

Mr. Manuel Lora is prepared to give CMU the details of his complaint and awaits a call. He can be reached at 305-374-0838 extension 29. 305 979 5106

Please let me know if you have any questions.

called x.29
4/14/99
3:05 pm
left voice mail

Rec'd 4/14/99
called CAF analyst
4/14 TL V/M

From: Anne Marsh
To: Sue Ollila
Subject: fwd: ABA complaint

===NOTE==========7/29/99=10:48am==========
CC: Kate Smith

.....

Do you still have the original file? I seem to have a copy, not the original, and Consumer Affairs can't find it either.

Fwd=by:=Sue=Ollila====7/29/99=10:59am==========
Fwd to: Anne Marsh

.....

Consumer Affairs sent me what I thought was its original. I also have the original of material I gathered/generated. I'll be happy to give you the original, but I'll need to get myself a copy first.

Fwd=by:=Anne=Marsh====7/29/99=11:00am==========
Fwd to: Sue Ollila
CC: Kate Smith

.....

Consumer Affairs needs the original back. Kate, Sue will get it back to you. Thanks, Sue.

Fwd=by:=Sue=Ollila====7/29/99=11:02am==========
Fwd to: Anne Marsh, Kate Smith

.....

Which original? CAF's or my part?
Fwd=by:=Kate=Smith====7/29/99=11:05am==========
Fwd to: Sue Ollila

.....

THANK YOU, SUE! We would like our original back, but if you have additional material, we will need that eventually so that in the end the file will be complete. If you want to keep your originals until after the case is over, that's fine, but could we have copies for our files?

:-)))

Thanks again.

Fwd=by:=Sue=Ollila====7/29/99=11:09am==========
Fwd to: Kate Smith

.....

I'll get your original back to you after I get a copy made for myself, and I'd prefer to keep my originals until the case is over, so I'll get you a copy of them. I'll email you when they're available - I can either put them in the mail or you could have someone pick them up. Thanks.

STATE OF FLORIDA

Commissioners:
JOE GARCIA, CHAIRMAN
J. TERRY DEACON
SUSAN F. CLARK
JULIA L. JOHNSON
E. LEON JACOBS, JR.

DIVISION OF CONSUMER AFFAIRS
BEVERLEE DEMELLO
DIRECTOR
(850) 413-6100
TOLL FREE 1-800-342-3552

Public Service Commission

April 9, 1999

Mr. Manuel Lora
ABA Professional Association, Inc.
Tower #4 - Suite #662
801 Brickell Bay Drive
Miami, FL 33131

RE: FPSC Inquiry #237627R

Dear Mr. Lora:

This is in response to your communications with the Florida Public Service Commission (PSC) concerning BellSouth Telecommunications, Incorporated (BellSouth).

In an effort to resolve your complaint, we contacted the company and requested a detailed written report regarding your concerns. It is my understanding that a representative from the utility contacted you to discuss this matter. Based on a review of the information provided to the PSC, it appears that the company has made a total adjustment of $8,022.90.

The following are explanations for the adjustments that were issued:

- **$1,989.36 - installation charges**
- **5,489.11 - equipment order**
- **544.43 - additional line**

Per your conversation with Ms. Powanda on December 15, 1998, it was agreed that you would be responsible for the recurring monthly charges. Your additional concern of three payments that had not yet been posted was investigated.

HP OfficeJet
Personal Printer/Fax/Copier

Fax Log Report

Mar-26-99 05:44 PM

Identification	Result	Pages	Type	Date	Time	Duration	Diagnostic
613053740497	OK	02	Sent	Mar-26	05:43P	00:00:46	002482030022

1.3.0 2.8

STATE OF FLORIDA

Commissioners:
JOE GARCIA, CHAIRMAN
J. TERRY DEASON
SUSAN F. CLARK
JULIA L. JOHNSON
E. LEON JACOBS, JR.

DIVISION OF CONSUMER AFFAIRS
BEVERLEE DEMELLO
DIRECTOR
(850) 413-6100
TOLL FREE 1-800-342-3552

Public Service Commission

FACSIMILE TRANSMITTAL COVER SHEET

DATE: March 26, 1999

TO: Mr. Manuel Lora

OFFICE/BUSINESS: ABA Professional Association, Inc.

FAX NUMBER: 305-374-0497

FROM: DIVISION OF CONSUMER AFFAIRS

FAX NUMBER: (850) 413-6362

TELEPHONE NUMBER: (850) 413-6100 OR 1-800-342-3552

COMMENTS: Letter as you requested

NUMBER OF PAGES, INCLUDING THIS COVER SHEET: 2

STATE OF FLORIDA

Commissioners:
JOE GARCIA, CHAIRMAN
J. TERRY DEASON
SUSAN F. CLARK
JULIA L. JOHNSON
E. LEON JACOBS, JR.

DIVISION OF CONSUMER AFFAIRS
BEVERLEE DEMELLO
DIRECTOR
(850) 413-6100
TOLL FREE 1-800-342-3552

Public Service Commission

March 26, 1999

Mr. Manuel Lora
ABA Professional Association, Inc.
801 Brickell Bay Drive,
Tower #4 Suite#662
Miami, Florida 33131

Dear Mr. Lora:

According to our discussion on Friday March 25, 1999, I believe that the most expeditious way to proceed with our investigation of your dispute with BellSouth at this point is to transfer your case to our division of Communications for further review. By doing this, you are not waiving your rights to a future informal conference if one is needed. Once I receive your approval, I will forward the entire file to that division, and someone will be in contact with you to discuss your concerns.

If you have any questions, you may call me toll free at 1-800-342-3552, direct at 850-413-6119, by toll free fax 800-511-0809, or email me at lrasberr@psc.state.fl.us.

Sincerely,

Leroy A. Rasberry
Chief, Bureau of Complaint Resolution

LAR

cc: file

ABA PROFESSIONAL ASSOCIATION INC.

801 BRICKELL BAY DRIVE
TOWER #4 SUITE #662 MIAMI FL, 33131

Phone 1-800-222-4373 USA & Canada
1-800-344-8211 From The Caribbean
800-122-06 From Venezuela
0130-814747 From Germany
046-059416 From Switzerland

FAX 1-800-442-0497 From USA, Canada, & Caribbean ELSEWHERE 305-374-0497
LOCAL NUMBERS 305- 374-3131, 374-3162, 374-6404 374-0838,

E-MAIL ABAHERE@WORLDNET.ATT.NET

MARCH 25, 1999

BELL SOUTH
PUBLIC SERVICE COMMISSION
C/O BEVERLY DEMELLO
VOICE: 1-800-342-3552
FAX: 1-800-511-0809

TO: BEVERLY DEMELLO

I AM REQUESTING FOR AN INFORMAL CONFERENCE BETWEEN BELL SOUTH AND MY FIRM ABOUT SOME CREDIT ADJUSTMENTS DUE TO US. I UNDERSTAND THERE WAS A MISUNDERSTANDING ABOUT PAYMENTS THAT WERE MADE. I AM FULLY AWARE OF FACTS THAT PAYMENT WAS MADE TO BELL SOUTH AND BELL SOUTH ACKNOWLEDGES THIS AS WELL.

SOME HOW I UNINTENTIONALLY MISLED OR MISINFORMED OTHERS WHICH CAUSED THEM TO IGNORE THE FACTS DEPICTED IN LETTERS BY MANUEL LORA WHICH CLEARLY STATES THAT INSTALLATION, SERVICE AND EQUIPMENT WAS CREDITED ONLY PARTIALLY FROM 8/98 TO 12/31/98.

PAYMENTS WERE MADE WHICH SHALL BE CREDITED.

SINCERELY YOURS,

GARY MARCELIN

ABA PROFESSIONAL ASSOCIATION INC.

801 BRICKELL BAY DRIVE
TOWER-4 SUITE #662 MIAMI FL, 33131

Phone 1-800-222-4373 USA & Canada
1-800-344-8211 From The Caribbean
800-122-06 From Venezuela
0130-814747 From Germany
046-059416 From Switzerland

FAX 1-800-442-0497 From USA, Canada, & Caribbean ELSEWHERE 305-374-0497
LOCAL NUMBERS 305- 374-3131, 374-3162, 374-6404 374-0838,

E-MAIL. ABAHERE@WORLDNET.ATT.NET

MARCH 8, 1999

PUBLIC SERVICE COMMISSION
C/O NANCY SIMMONDS
VOICE 1-800-342-3552
FAX 800-511-0809.

COMPLAINT #237627R CONTINUATION.

REPORT #33

SUBJECT : ATTACHED PAID RECEIPTS

PURSUANT TO YOUR CONVERSATION ON THIS DATE WITH MR. LORA , WE SUBMITT THE ATTACHED REQUESTED RECEIPTS WITH THIS LETTER. AS PREVIOUSLY EXPLAINED MS, PENELAS A COLLECTION SUPERVISOR FROM BELL SOUTH HAS PROVIDED US WITH THE ATTACHED REPORTS WHICH HAVE NO BEARINGS ON THIS NEW COMPLAIN.

WE BASED OUR STATEMENTS AS FOLLOW. WHEN YOU AFFORDED US THE FIRST RESPONSE GIVEN TO YOU BY BELL SOUTH REPRESENTATIVE MS PATRICIA GODSILS VIA FAX FROM THE OFFICE OF BELL SOUTH PRESIDENT .
WE REVIEWED IT AND FOUND THAT THE RESPONSE WAS LIMITED.

WE OPTED TO CONTACT MS GODSIL WHOM RIGHTFULLY EXPLAIN THAT THEY FOLLOW BELL SOUTH POLICY TO ONLY ADDRESS ISSUES RAISED BY THE COMPLAINANTS OR COMPLAINING PARTIES, HENCE WE CHOSE TO FOLLOW THEIR STYLE OF RESPONSE TO AVOID CONFUSION AND FURTHER DELAYS.

ABA PROFESSIONAL ASSOCIATION INC.

801 BRICKELL BAY DRIVE
TOWER-4 SUITE #662 MIAMI FL, 33131

3/24/99 Ms SIMMONDS Mr MARCELIN (GARY) EXPLAINED TO ME THAT YOU HAD CALLED AND GIVEN HIM THE DATES OF RECEIPTS. THERE MUST BE SOME MISUNDERSTANDING THERE IS NO QUESTIONS REGARDING THE DATES. WE HAVE THE RECEIPTS WE PROVIDED THOSE COPIES (RECEIPTS) TO YOU VIA FAX AS WELL AS BELL SOUTH. THEY BELL SOUTH ACKNOWLEDGE THEY DID IN FACT POSTED THOSE PAYMENTS TO THE COMPANY ACCOUNT.

THE ISSUE IS SIMPLE WE MADE AN ORAL COMPLAIN. THAT COMPLAIN WAS IGNORED OUR SERVICES WERE INTERRUPTED. WE WERE FORCED TO MAKE PAYMENTS (D.PHILLIPS) THEN A FORMAL COMPLAIN WAS MADE THROUGH YOU (SEE ABOVE CASE #) BELL SOUTH THEN ACKNOWLEDGED AND CREDIT THE ENTIRE ACCOUNT FOR THE LENGHT OF TIME OF THE COMPLAIN 8/-12/1998. HENCE, THOSE AMOUNTS PAID BY US DURING SAID PERIOD 8/-12/1998 SHOULD HAVE BEEN REFUNDED OR CREDITED TO THE ACCOUNT FOR FUTURE BILLING PURPOSES.

M Fax 3/25/99

The following information was provided by BellSouth showing all payments paid on telephone number 305-374-0838:

- **$ 500.00 - posted on December 1, 1998**
- **1,283.89 - posted on December 8, 1998**
- **144.76 - posted on December 12, 1998**

Because you expressed additional concerns regarding credits or refunds that may be due to you, the entire file on this matter is being forwarded to the PSC's Division of Communications for review. Someone from that division will contact you in the near future.

Sincerely,

Nancy Corrijo-Simmonds
Regulatory Specialist I
Division of Consumer Affairs

c: Division of Communications

ABA PROFESSIONAL ASSOCIATION INC.

801 BRICKELL BAY DRIVE
TOWER-4 SUITE #662 MIAMI FL, 33131

Phone 1-800-222-4373 USA & Canada
1-800-344-8211 From The Caribbean
800-122-06 From Venezuela
0130-814747 From Germany
046-059416 From Switzerland

FAX 1-800-442-0497 From USA, Canada, & Caribbean ELSEWHERE 305-374-0497
LOCAL NUMBERS 305- 374-3131, 374-3162, 374-6404 374-0838,

E-MAIL ABAHERE@WORLDNET.ATT.NET

MARCH 26, 1999

PUBLIC SERVICE COMMISSION
COMMUNICATIONS DIVISION
C/O LEROY RASBERRY
VOICE 1-800-342-3552
FAX 1-800-511-0809

COMPLAINT #237627R CONTINUATION.

REPORT #36

SUBJECT : TO FORWARD COMPLAIN TO DIVISION COMMUNICATIONS,

DEAR MR. RASBERRY AS PER YOUR SUGGESTION AT THIS POINT UPON YOUR RECOMMENDATION AND SUGGESTION WE ACCEPT YOUR PROPOSAL TO DROP THE REQUEST FOR INFORMAL CONFERENCE.

WE RESPECTFULLY REQUEST TO TRANSFER OUR JUST AND FAIR COMPLAIN TO THE DIVISION OF COMMUNICATION WHEREAS THEY WILL ASSIST US IN TRYING TO SETTLE THIS MATTER. .

SINCERELY,

MANUEL LORA