BEFORE THE
FLORIDA PUBLIC SERVICE COMMISSION

DOCKET NO. 020919-TP

In the Matter of

REQUEST FOR ARBITRATION CONCERNING COMPLAINT OF AT&T COMMUNICATIONS OF THE SOUTHERN STATES, LLC, TELEPORT COMMUNICATIONS GROUP, INC., AND TCG SOUTH FLORIDA FOR ENFORCEMENT OF INTERCONNECTION AGREEMENTS WITH BELLSOUTH TELECOMMUNICATIONS, INC.
_____/

ELECTRONIC VERSIONS OF THIS TRANSCRIPT ARE A CONVENIENCE COPY ONLY AND ARE NOT THE OFFICIAL TRANSCRIPT OF THE HEARING, THE .PDF VERSION INCLUDES PREFILED TESTIMONY.

VOLUME 2

PAGES 196 THROUGH 372

PROCEEDINGS: HEARING

BEFORE: COMMISSIONER J. TERRY DEASON
COMMISSIONER BRAULIO L. BAEZ
COMMISSIONER RUDOLPH BRADLEY

DATE: Wednesday, May 7, 2003

TIME: Commenced at 9:35 a.m.
Concluded at 5:13 p.m.

PLACE: Betty Easley Conference Center
Room 148
4075 Esplanade Way
Tallahassee, Florida

REPORTED BY: TRICIA DeMARTE, RPR
Official FPSC Reporter
(850) 413-6736

APPEARANCES: (As heretofore noted.)

DOCUMENT NUMBER-DATE
04551 MAY 20 8
FPSC-COMMISSION CLERK

1 I N D E X

2 WITNESSES

3 NAME: PAGE NO.

4 ROBERTA STEVENS

5 Direct Examination by Ms. Cecil 199
Prefiled Rebuttal Testimony Inserted 201
6 Cross Examination by Mr. Shore 213
Redirect Examination by Ms. Cecil 229
7

8

9 ELIZABETH R. A. SHIROISHI

10 Direct Examination by Mr. Shore 234
Prefiled Direct Testimony Inserted 237
11 Prefiled Rebuttal Testimony Inserted 249
Cross Examination by Ms. Cecil 263
12 Cross Examination by Ms. Christensen 362

13

14

15

16

17

18 CERTIFICATE OF REPORTER 372

19

20

21

22

23

24

25

EXHIBITS

NUMBER:		ID.	ADMTD.
24	Rebuttal RS-1	212	234
25	ERAS-1	236	370
26	BellSouth/Auglink Agreement	339	370
27	Local Traffic Matrix	346	370

1 P R O C E E D I N G S
2 (Transcript continues in sequence from Volume 1.)
3 COMMISSIONER DEASON: Call the hearing back to order.
4 AT&T, you can call your next witness.
5 MS. CECIL: AT&T calls Roberta Stevens.
6 ROBERTA STEVENS
7 was called as a witness on behalf of AT&T Communications of the
8 Southern States, LLC, Teleport Communications Group, Inc., and
9 TCG South Florida, Inc., and, having been duly sworn, testified
10 as follows:
11 DIRECT EXAMINATION
12 BY MS. CECIL:
13 Q Ms. Stevens, would you state your name and business
14 address for the record?
15 A Roberta Stevens, 567 Cascade Drive, Lilburn, Georgia.
16 Q And could you affirm that previously today that you
17 swore to tell the truth in this proceeding?
18 A Yes.
19 Q Are you the same Roberta Stevens who filed ten (sic)
20 pages of rebuttal testimony on March the 14th, 2003 which
21 included one exhibit?
22 A Yes.
23 Q Do you have any changes to your testimony?
24 A No, I don't.
25 Q Ms. Stevens, if I ask you today the same questions

that are included in your rebuttal testimony, would your answers be the same?

A Yes, they would.

MS. CECIL: Commissioner, we would move the admission of Roberta Stevens' rebuttal testimony.

COMMISSIONER DEASON: Without objection, it shall be inserted into the record.

1 PLEASE STATE YOUR NAME, TITLE, AND BUSINESS ADDRESS.
2
3 A. My name is Roberta Stevens. I am a Manager in the Local Services
4 & Access Management organization of AT&T Corp. ("AT&T"). My
5 business address is 567 Cascade Drive, Lilburn, GA 30047.
6
7 Q. FOR WHOM ARE YOU FILING TESTIMONY IN THIS
8 PROCEEDING?
9
10 A. I am testifying on behalf of AT&T Communications of the Southern
11 States, LLC, Teleport Communications Group, Inc., and TCG of the
12 Carolinas, Inc. (collectively referred to as "AT&T").
13
14 Q. HAVE YOU PREVIOUSLY TESTIFIED IN OTHER REGULATORY
15 PROCEEDINGS?
16
17 A. Yes. I have testified in North Carolina regarding the same issues
18 that are pending in this proceeding.
19
20 Q. PLEASE PROVIDE A BRIEF DESCRIPTION OF YOUR EDUCATION
21 AND EXPERIENCE.
22
23 A. I received a Bachelor of Business Administration degree from
24 Georgia State University in 1992. My twenty-five (25) year career
25 in telecommunications began in July of 1977 with Southwestern

1 Bell in Tulsa, Oklahoma, where I held various positions in
2 Business and Consumer Marketing. I joined AT&T in 1984 and
3 have held positions in Consumer Marketing, External Affairs, State
4 Government Affairs, and Local Services and Access Management.
5 In February of 2001, I joined AT&T's Local Services and Access
6 Management organization to assist in AT&T's negotiation of new
7 Interconnection Agreements between AT&T and BellSouth
8 Telecommunications Inc. ("BellSouth") for AT&T's nine Southern
9 Region states. I participated (and continue to participate) on a
10 cross-functional team whose objective is to negotiate contract
11 terms and conditions that allow AT&T to obtain all the services,
12 features and functionalities guaranteed under the
13 Telecommunications Act of 1996 ("Act") and subsequent orders,
14 rules and implementing regulations of the Federal
15 Communications Commission ("FCC").
16
17 Q. WHAT IS THE PURPOSE OF YOUR TESTIMONY?
18
19 A. My testimony responds to the Direct Testimony filed by
20 Elizabeth R. A. Shiroishi on January 15, 2003 on behalf of
21 BellSouth Telecommunications, Inc. ("BellSouth") regarding
22 various discussions which she states took place between AT&T and
23 BellSouth in the context of negotiations for Second Interconnection
24 Agreement.
25

1 Q. WERE YOU A MEMBER OF THE AT&T NEGOTIATIONS TEAM?
2
3 A. Yes, I was. I joined the team in February 2001, reporting to
4 Mr. Billy C. Peacock, AT&T's lead negotiator with BellSouth. I
5 remain a part of this team and continue to work on various
6 interconnection issues with BellSouth.
7
8 Q. WHAT ARE YOUR RESPONSIBILITIES?
9
10 A. I assist Mr. Peacock in organizing documents and materials
11 utilized in the negotiations, including retaining and cataloguing
12 various versions of contract language exchanged between the
13 parties; I attend negotiations meetings and conference calls and
14 make notes of discussions which occur during these meetings; I
15 coordinate with various AT&T "subject matter experts" regarding
16 the status of negotiations and arrange for their review of proposed
17 contract language; I keep logs and matrixes of "open" and "closed"
18 contract language; and finally I assist with the preparation of
19 arbitration petitions filed with the state commissions. I was not
20 part of the team when the arbitration petition was filed. However, I
21 assisted in the data gathering, management of documents, etc.
22 pertaining to the arbitration once the proceeding was docketed.
23
24 Q. FROM THE TIME THAT YOU JOINED THE AT&T NEGOTIATIONS
25 TEAM IN FEBRUARY, 2001, HOW FREQUENTLY DID YOU

1 ATTEND NEGOTIATIONS MEETINGS AND CONFERENCE CALLS
2 BETWEEN AT&T AND BELLSOUTH?
3
4 A. From February, 2001 until AT&T's negotiations with BellSouth
5 were concluded, I attended practically all of the negotiations
6 meetings and conference calls between AT&T and BellSouth.
7
8 Q. WAS IT PART OF YOUR RESPONSIBILITY TO MAKE NOTES
9 DURING THESE MEETINGS AND CONFERENCE CALLS?
10
11 A. Yes.
12
13 Q. DID YOU MAKE NOTES DURING THESE MEETINGS AND
14 CONFERENCE CALLS?
15
16 A. Generally yes. However, if we had a conference call or meeting
17 that involved a limited issue, I may not have made notes, but
18 instead may have made notations on the "red-lined" version of the
19 interconnection agreement, and/or made notations on the tracking
20 matrix for our interconnection agreement negotiations. For the
21 Commission's convenience, I have attached the meeting notes as
22 RS Rebuttal Exhibit 1.[1]
23

[1] In order to preserve AT&T's attorney-client privilege, I have not included any meeting notes which summarize discussions of AT&T "internal only" meetings where AT&T attorneys were present and provided advise and counsel. I also have not included various "red-lined" versions of the interconnection agreement because of their voluminous nature.

1 Q. DO YOU REMEMBER BEING PRESENT AT MEETINGS OR
2 CONFERENCE CALLS WHERE MS. SHIROISHI ALSO WAS
3 PRESENT?
4
5 A. Yes. She attended many of the negotiating meeting and conference
6 calls which I attended.
7
8 **<u>ISSUE 2</u>: DOES THE TERM "LOCAL TRAFFIC" AS USED IN**
9 **THE SECOND INTERCONNECTION AGREEMENT IDENTIFIED**
10 **IN AT&T'S COMPLAINT INCLUDE ALL "LATAWIDE" CALLS,**
11 **INCLUDING ALL CALLS ORIGINATED OR TERMINATED**
12 **THROUGH SWITCHED ACCESS ARRANGEMENTS AS**
13 **ESTABLISHED BY THE STATE COMMISSION OR FCC?**
14
15 **<u>ISSUE 3</u>: UNDER THE TERMS OF THE SECOND**
16 **INTERCONNECTION AGREEMENT, DO RECIPROCAL**
17 **COMPENSATION RATES AND TERMS APPLY TO CALLS**
18 **ORIGINATED OR TERMINATED THROUGH SWITCHED ACCESS**
19 **ARRANGEMENTS AS ESTABLISHED BY THE STATE**
20 **COMMISSION OR FCC?**
21
22 Q. AT PAGE 7, LINES 14-18 OF MS. SHIROISHI'S TESTIMONY SHE
23 STATES "IN THE COURSE OF THESE DISCUSSIONS, THE
24 PARTIES DISCUSSED THE FACT THAT THIS REFERENCE
25 [EXCEPT FOR THOSE CALLS THAT ARE ORIGINATED OR

1 TERMINATED THROUGH SWITCHED ACCESS ARRANGEMENTS
2 AS ESTABLISHED BY THE STATE COMMISSION OR FCC] WAS TO
3 THE SWITCHED ACCESS ARRANGEMENTS THAT ARE OFFERED
4 FOR PURCHASE THROUGH EACH PARTY'S SWITCHED ACCESS
5 TARIFFS, WHICH ARE APPROVED BY THE STATE COMMISSION
6 (FOR INTRASTATE SWITCHED ACCESS] OR THE FCC [FOR
7 INTERSTATE SWITCHED ACCESS." DO YOU EVER REMEMBER
8 BEING IN A MEETING, OR ON A CONFERENCE CALL, WHEN MS.
9 SHIROISHI, OR ANYONE ELSE FROM BELLSOUTH, MADE SUCH
10 STATEMENTS?
11
12 A. No. Not during the timeframe in question. I do remember her
13 making such a statement, but it was only ***after*** the parties had
14 signed Second Interconnection Agreement on October 26, 2001,
15 and it was only when BellSouth began providing its "interpretation"
16 of what constituted "Local Traffic" under Second Interconnection
17 Agreement. My notes reflect that she made such statements at a
18 meeting between the parties on November 16, 2001.
19
20 Q. RATHER THAN RELYING SOLELY ON YOUR MEMORY, DID YOU
21 CHECK YOUR MEETING OR CONFERENCE CALL NOTES TO
22 DETERMINE WHETHER YOU EVER RECORDED THAT MS.
23 SHIROISHI, OR ANYONE ELSE FROM BELLSOUTH, MADE SUCH
24 STATEMENTS?
25

1 A. Yes I did. But again, I found no entries in my notes where I had
2 recorded that such statements were made by Ms. Shiroishi or
3 anyone else from BellSouth before the parties signed Second
4 Interconnection Agreement on October 26, 2001.
5
6 Q. AT PAGE 8, LINES 1-4 OF MS. SHIROISHI'S TESTIMONY SHE
7 STATES "...WE HAD EXTENSIVE DISCUSSION ABOUT THE
8 EXCLUSION OF TRAFFIC THAT ORIGINATED OR TERMINATED
9 THROUGH SWITCHED ACCESS ARRANGEMENTS. IN THE
10 COURSE OF THOSE DISCUSSIONS, WE DREW DIAGRAMS ON
11 THE WHITEBOARD AND DISCUSSED THE ROLE OF SWITCHED
12 ACCESS ARRANGEMENTS AS OUTSIDE THE DEFINITION OF
13 LOCAL TRAFFIC." DO YOU RECALL MS. SHIROISHI, OR ANYONE
14 ELSE FROM BELLSOUTH, MAKING SUCH STATEMENTS OR
15 "DRAWING SUCH DIAGRAMS ON THE WHITEBOARD"?
16
17 A. No.
18
19 Q. DID YOU CHECK YOUR MEETING NOTES TO SEE IF YOU
20 RECORDED ANY OF THESE STATEMENTS OR REFERENCED
21 THE DRAWING OF DIAGRAMS?
22
23 A. Yes. Although I found no recorded statements, my meeting notes
24 regarding a meeting of June 6, 2001, state: "Local channel and

1 dedicated Transport Definition—Bill to get with Dave Talbott to
2 discuss BST explanation. Sam drew out BST diagrams."
3
4 Q. PLEASE IDENTIFY "BILL," "DAVE TALBOTT," AND "SAM" FROM
5 YOUR JUNE 6, 2001 MEETING NOTES.
6
7 A. "Bill" refers to Bill Peacock; "Dave Talbott" refers to AT&T's subject
8 matter expert on network architecture and "Point of
9 Interconnection;" "Sam" refers to Sam Benenati, my peer on the
10 negotiations team.
11
12 Q. REGARDING THE TERMS "LOCAL CHANNEL AND DEDICATED
13 TRANSPORT" FROM YOUR JUNE 6, 2001 MEETING NOTES, TO
14 WHAT SECTIONS OF SECOND INTERCONNECTION AGREEMENT
15 DO THOSE TERMS APPLY?
16
17 A. There is a section in Second Interconnection Agreement titled
18 Network Interconnection. This section has two sub-sections 1.10
19 and 1.12. In my handwritten notes, and in the version of Second
20 Interconnection Agreement which we were negotiating at the time,
21 the sub-section references were 1.9 and 1.11. These sub-sections
22 apply to discussions the parties were having regarding network
23 architecture and "Point of Interconnection" and not the definition
24 of "switched access arrangements."
25

1 Q. ARE YOU AWARE OF ANY OTHER REFERENCES IN MS.
2 SHIROISHI'S TESTIMONY REGARDING DISCUSSIONS BETWEEN
3 AT&T AND BELLSOUTH WHICH YOU HAVE NOT ADDRESSED IN
4 YOUR TESTIMONY?
5
6 A. No.
7
8 Q. DOES THIS CONCLUDE YOUR TESTIMONY?
9
10 A. Yes.

1 BY MS. CECIL:
2 Q Ms. Stevens, have you prepared a summary of your
3 testimony?
4 A Yes, I have.
5 Q Could you please give that.
6 A Good afternoon, Commissioners. My name is
7 Roberta Stevens and I'm employed by AT&T Corp. I first joined
8 AT&T in 1984 holding various positions in consumer marketing,
9 external affairs, state government affairs, and most recently,
10 AT&T's Local Services and Access Management organization.
11 Before joining AT&T in 1984, from 1977 to 1984, I worked for
12 Southwestern Bell in various business and consumer marketing
13 organizations. All totaled, I have over 25 years experience in
14 the Bell system and the telecommunications industry.
15 In February 2001, I joined Bill Peacock's team
16 supporting AT&T's interconnection negotiations with BellSouth.
17 In this position, I am responsible for organizing documents and
18 materials utilized in the negotiations and retaining and
19 cataloging various versions of contract language that the
20 parties exchanged. I attend negotiations meetings and
21 conference calls and make notes of discussions which occur
22 during these meetings. I also coordinate with various AT&T
23 subject matter experts regarding the status of negotiations and
24 arrange for their review of proposed language; I keep matrices
25 of open and closed contract language; and finally, I assist in

1 arbitration proceedings before the state commissions. My
2 testimony responds to the direct testimony of BellSouth's Beth
3 Shiroishi, regarding various discussions which she states took
4 place between AT&T and BellSouth regarding the Florida
5 interconnection agreement signed by the parties on October 26,
6 2001.
7 From February 2001, when I first joined Mr. Peacock's
8 team, throughout the remainder of the negotiations period, I
9 attended practically all of the negotiation meetings and
10 conference calls where I was the AT&T note taker. Accordingly,
11 I attended meetings and conference calls which Ms. Shiroishi
12 attended. I made notes of these meetings and conference calls
13 on a routine basis.
14 In her direct testimony, Ms. Shiroishi claims that
15 AT&T and BellSouth had extensive discussions about the
16 exclusion of traffic that originated or terminated through
17 switched access arrangements and that during those discussions
18 BellSouth drew diagrams on a whiteboard. According to
19 Ms. Shiroishi, BellSouth specifically discussed the calls that
20 traversed switched access arrangements and the fact that they
21 would be expressly excluded from the definition of local
22 traffic.
23 I never remember being in a meeting or on a
24 conference call when Ms. Shiroishi, or anyone else from
25 BellSouth, made any such statements prior to the execution of

1 the interconnection agreement on October 26, 2001. My notes
2 reflect that AT&T and BellSouth had a meeting on June 6, 2001
3 where diagrams were drawn, but these diagrams specifically
4 related to network architecture and point of interconnection,
5 two open issues that AT&T and BellSouth were still negotiating.
6 Neither of these issues related to what constituted local
7 traffic under the terms of the interconnection agreement
8 executed by the parties.
9 Moreover, my notes reflect that Ms. Shiroishi only
10 made BellSouth's position on the exclusions from what
11 constituted local traffic known on November 16, 2001. In
12 concluding that Ms. Shiroishi did not make such statements
13 between February 2001 through October 26, 2001, I did not rely
14 solely on my memory. I also checked my notes and found no
15 entries where I had recorded that Ms. Shiroishi had made such
16 statements during this period. This concludes my summary.
17 Thank you.
18 MS. CECIL: Commissioner, we would like to mark
19 Ms. Peacock's -- I'm sorry, Ms. Stevens' rebuttal exhibit as
20 Number 24.
21 COMMISSIONER DEASON: It will be so identified.
22 (Exhibit 24 marked for identification.)
23 MS. CECIL: The witness is available for cross.
24 COMMISSIONER DEASON: BellSouth.
25 MR. SHORE: Thank you, Commissioner Deason.

CROSS EXAMINATION

BY MR. SHORE:

Q Ms. Stevens, I'm Andrew Shore representing BellSouth. I've got some questions for you about your sworn testimony in this case. First of all, your prefiled testimony in this case, with the exception of changing some dates and page number references to Ms. Shiroishi's testimony, it's identical to the prefiled testimony that you filed in North Carolina; correct?

A Correct.

Q Did you review your North Carolina deposition and your hearing testimony to prepare for your testimony today?

A Yes, I did.

Q Great. Now, you joined the AT&T team negotiating the interconnection agreement with BellSouth you said in February of 2001?

A That's correct.

Q And you said that in your testimony and I think in your summary again this morning -- or this afternoon now that you attended practically all the negotiating meetings and the conference calls that AT&T had with BellSouth; correct?

A Correct.

Q And one of your responsibilities was to be AT&T's official note taker during those meetings and conference calls; right?

A Correct.

1 Q You've attached all of your meeting notes as
2 Exhibit 1 to your testimony here; correct?
3 A Correct.
4 Q And those notes cover the period from February 2001
5 through mid December 2001; correct?
6 A Correct.
7 Q Now, the parties signed the Florida interconnection
8 agreement in October of 2001; right?
9 A Correct.
10 Q And they signed the first amendment to that
11 interconnection agreement that amended Section 5.3 of
12 Attachment 3 in April 2002; correct?
13 A Subject to check.
14 Q Okay. Now, your notes -- all your meeting notes that
15 you attached as Exhibit 1, those cover several issues that the
16 parties were discussing during the time period covered by your
17 notes; correct?
18 A That's correct.
19 Q On Pages 7 and 8 of your testimony, you swear that
20 you don't recall Ms. Shiroishi making certain statements that
21 she says in her testimony that she made in meetings with AT&T
22 in June and July 2001 explaining the exclusion for calls
23 carried over switched access arrangements; correct?
24 A I'm sorry, you're talking a little bit fast. You
25 said in my testimony on Page 7 and 8?

Q Yes, ma'am.

A Okay. And I'm sorry. I kind of lost you because I was thinking about where I needed to be.

Q Okay. In your testimony on Page 7 and 8, are you there now?

A Yes.

Q Okay. You swear that you don't recall Ms. Shiroishi making certain statements that she says that she made in the June and July time period of 2001 where she explained the exclusion for calls carried over switched access arrangements to AT&T. That's your testimony; correct?

A Yes.

Q You testified in North Carolina that the definition of local traffic was not an open issue that the parties were discussing after you joined the team in February 2001 leading up to the execution of the North Carolina agreement on July 19th of 2001; correct?

A That's correct. I clarified it by saying that it had already been decided, the definition had already been secured in the Mississippi agreement.

Q And your recollection at the time I deposed you was that you didn't recall the parties discussing the definition of local traffic after you joined the team. Wasn't that your testimony?

A Yes, as it pertained to anything different than the

1 Mississippi agreement which indicates that local traffic in
2 the -- that originates and terminates in the same LATA is
3 considered local. Correct. There was no further discussion
4 about that definition.
5 Q Now, can we agree that the definition of local
6 traffic in the Florida interconnection agreement is different
7 than the Mississippi agreement? The words are different,
8 aren't they?
9 A The words are different.
10 Q Can we at least agree on that much?
11 A I agree that the words are different.
12 Q Okay. Now, in North Carolina, you testified that you
13 didn't have any independent recollection of BellSouth even
14 proposing a new definition of local traffic with the exception
15 for switched access arrangements in May 2001; correct?
16 A I'm sorry, could you repeat the question?
17 Q Yeah. You testified at your deposition that you
18 didn't even recall from your personal recollection BellSouth
19 proposing a LATAwide definition with an exception for calls
20 carried over switched access arrangements?
21 A Correct. And I think I again clarified it by saying
22 because it had already been -- the definition had already been
23 secured in the Mississippi agreement and it carried forward to
24 other agreements.
25 Q Okay. Now, when I asked you about the same testimony

1 in North Carolina that appears here on Pages 7 and 8 of your
2 Florida testimony about you not recalling Ms. Shiroishi making
3 the statements that she says she made, your testimony was that
4 you were not swearing she didn't make them before the parties
5 agreed to the language but that your notes just didn't reflect
6 them. That was your testimony; correct?
7 A My testimony says I found no entries where I had
8 recorded such statements and I stand by my notes.
9 Q Right. I know that you testified that you couldn't
10 swear that you never made them. That was your testimony,
11 wasn't it?
12 A I don't recall that I ever said. If you want to show
13 me in the deposition where I said that.
14 Q Sure.
15 A I don't recall that I said I swore I didn't.
16 Q Do you have your deposition up there?
17 A I do.
18 Q Can you turn to Page 36?
19 A I'm sorry, 36?
20 Q Yes, ma'am.
21 A Okay. I'm there.
22 Q See down on Line 17 where I asked you and your answer
23 over on the next page? And I'm referring to the testimony
24 that's identical to the testimony here on Pages 7 and 8 of your
25 Florida testimony. And your answer over on the next page, that

1 you don't remember Ms. Shiroishi or anyone else from BellSouth
2 making such a statement before the parties signed the
3 interconnection agreement; correct?
4 And your answer was: Correct.
5 Then I asked you: Is it your sworn testimony that
6 Ms. Shiroishi never made such a statement in any meeting you
7 attended or just that your notes don't recall -- your notes
8 don't recall hearing her make such a statement?
9 Do you see that?
10 A Yes, I see it.
11 Q And what was your answer?
12 A "My notes do not reflect that she made such a
13 statement."
14 Q Now, you do recall that the issues of compensation
15 for ISP traffic and VOIP calls, those were open issues that the
16 parties were continuing to negotiate after you joined the team
17 in February and into the summer of 2001; right?
18 A That is correct.
19 Q And you testified in North Carolina that you
20 considered open issues to be key issues and that you took notes
21 on key issues; correct?
22 A Yes.
23 Q Have you read Mr. King's and Mr. Peacock's testimony
24 in this case?
25 A Yes.

1 Q And you've been sitting here all day today when they
2 testified; right?
3 A Yes.
4 Q Now, you're aware then that Mr. Peacock has testified
5 that Ms. Shiroishi told AT&T that it wanted the local traffic
6 definition and its exception for calls over switched access
7 arrangements in order to allay some concerns BellSouth had with
8 potential rulings regarding the jurisdictional nature of ISP
9 traffic and voice over Internet protocol transmissions. You're
10 familiar with that testimony by --
11 A Yes, I'm familiar with it.
12 Q There's nothing in your notes reflecting any such
13 statement by Ms. Shiroishi saying that BellSouth wanted that
14 exception language because of some concerns about potential
15 rulings, is there?
16 A There is notes -- excuse me, language in my notes
17 that we were discussing those issues, and the issues being the
18 ISP and voice over IP.
19 Q There's nothing in your notes that says -- meaning
20 that Ms. Shiroishi said that BellSouth wanted that exception
21 because it was concerned about potential rulings about the
22 jurisdictional nature of ISP traffic or voice over Internet
23 traffic; correct?
24 A I did not have any specific quote from Ms. Shiroishi
25 in my notes that says that.

1 Q And not only is there not any specific quote, there's
2 not even any reference; isn't that true?
3 A Can you point me specifically to the part of my notes
4 that you're talking about where you think it should have been
5 had it been discussed?
6 Q No, ma'am. I don't think that it's there, and I'm
7 just asking you to confirm the fact that there's nothing in
8 your notes reflecting Ms. Shiroishi ever saying that BellSouth
9 wanted the exception because it had some concerns about
10 potential rulings about ISP or voice over Internet
11 transmissions.
12 A No, those specific words are not there. Again, I
13 have references to "Beth needs to review language, Beth needs
14 to figure out what they're going to do with ISP."
15 Q I'm sorry, are you through?
16 A I'm finished, uh-huh.
17 Q So just to summarize, though, even though Mr. Peacock
18 said that Ms. Shiroishi said that the language was intended to
19 address -- the exception language was intended to address ISP
20 traffic and voice over Internet transmissions, and even though
21 you knew that those two issues, or the issues regarding the
22 compensation for ISP traffic and voice over Internet traffic,
23 were key issues, and your job was to take notes on key issues,
24 we can agree there's nothing in your notes to reflect
25 Ms. Shiroishi making those statements; right?

1 A There is language in my notes that reflect that ISP
2 and voice over IP were key issues that we were discussing.
3 Q There's nothing in your notes, again, that reflects
4 Ms. Shiroishi saying that BellSouth wanted that exception
5 language because of anything to do with ISP traffic or voice
6 over Internet traffic; correct?
7 A That specifically, no, there is not.
8 Q Now, you're also aware, I take it from reading
9 Mr. Peacock's testimony, that he testified that AT&T asked
10 BellSouth to change the phrase "ruling regulatory body" that
11 was originally in BellSouth's proposal to "established by the
12 state commission or the FCC" after discussing that phrase with
13 BellSouth and the meaning of that particular part of the
14 phrase; correct?
15 A I'm aware of that.
16 Q And there's nothing in your notes that reflects such
17 a conversation taking place between AT&T and BellSouth, is
18 there?
19 A Not that I recall in my notes.
20 Q Now, you say in your testimony on Page 7 that you
21 remember Ms. Shiroishi explaining that the exclusion for calls
22 over switched access arrangements referred to switched access
23 arrangements purchased out of each other's -- each party's
24 switched access tariffs, but that was after the parties signed
25 the interconnection agreement; correct?

1 A Correct.
2 Q At your deposition when I asked you about that
3 identical testimony that you filed in the North Carolina case,
4 you admitted that you didn't actually remember Ms. Shiroishi
5 saying that, but your testimony that she gave that explanation
6 in November was based upon you seeing a reference in your
7 notes; correct?
8 A Correct.
9 Q Now, you can't swear under oath that Ms. Shiroishi
10 never gave that explanation in June or July 2001 because you
11 don't remember the parties even discussing this issue then;
12 correct?
13 A No, it's not correct. I stand by my notes. My notes
14 were that if we had been negotiating away some key issues, I
15 would have made notes of that.
16 Q And you testified in North Carolina that the
17 definition of local traffic wasn't a key issue. That was your
18 testimony there; correct?
19 A No. It was not a key issue because it was not
20 discussed. It was already secured in the Mississippi
21 agreement. The parties didn't need to discuss it.
22 Q Now, would you look at the part of your Exhibit 1
23 where you have your meeting notes from November 16th? Do you
24 have that in front of you?
25 A I'm sorry, looking at what now?

1 Q Yeah, I think it's Exhibit 1 to your testimony --
2 A Yes.
3 Q -- you attached all of your meeting notes. And
4 there's some meeting notes from a meeting on November 16th
5 which is after the contract was signed, but I think that starts
6 on Page 48 of your exhibit.
7 A Just so I'm clear, is it the page numbered -- I'm
8 sorry. Yes, I see the Reference Number 48, yes.
9 Q Page 48 of 54, you see that?
10 A Yes.
11 Q Okay. Now, those are your meeting notes from a
12 meeting that took place on November 16th of 2001; correct?
13 A That's correct.
14 Q And your meeting notes reflect that Jeff K. from AT&T
15 being present; right?
16 A Correct.
17 Q Is that a reference to Jeff King?
18 A Yes, it is.
19 Q And you were here this morning, weren't you, when
20 Mr. King testified that he didn't attend any of the negotiation
21 sessions with BellSouth before the parties reached agreement on
22 this language?
23 A I believe what Mr. King said is that he did not
24 attend any of the negotiation sessions prior to our -- what's
25 the word I'm looking for -- agreeing to the language on July

1 the 19th. That's what he said.
2 Q Okay. This meeting -- well, the record will reflect
3 what he said, but those meeting notes here on November 16th,
4 2001, we can agree that that's after AT&T and BellSouth signed
5 the interconnection agreement with this language; correct?
6 A Are you talking about this language for Florida?
7 Q Yes, ma'am.
8 A Yes.
9 Q Now, do you think it's possible that Ms. Shiroishi
10 was reiterating her explanation for the benefit of Mr. King who
11 wasn't at those meetings in June and July 2001 where she said
12 she explained that exact same thing to AT&T's folks at those
13 meetings?
14 A I'm sorry, I missed the word after "did Ms. Shiroishi
15 rerate."
16 Q No. Do you think it's possible that in November --
17 that was after the parties realized that they had a dispute
18 about this language; correct?
19 A What was after, the November 16th?
20 Q Yes, ma'am.
21 A Yes. Right around that same time frame, end of
22 October, we realized there was a disconnect.
23 Q And your meeting notes from the November meeting
24 after you realized there was a disconnect, they're quite
25 detailed, aren't they?

1 A They reflect what we discussed.
2 Q And do you think it's possible that Ms. Shiroishi was
3 reiterating the same explanation that she gave AT&T in meetings
4 in June and July for Mr. King's benefit because he wasn't there
5 in June and July?
6 A I'm sorry, I don't know why I can't hear very well.
7 I'm missing the word that you're saying. Are you saying
8 deviate? That Ms. Shiroishi would deviate?
9 Q I'm sorry. Ms. Shiroishi would not do anything with
10 the root of devious in it, I can assure you. I'm saying
11 reiterating.
12 A Reiterating. Okay. I'm sorry, say the question
13 again, please.
14 Q Sure. Do you think it's possible --
15 COMMISSIONER BRADLEY: Maybe you need to speak into
16 the microphone.
17 MR. SHORE: I'm sorry.
18 BY MR. SHORE:
19 Q Do you think it's possible that that meeting in
20 November, where you took the notes after the parties realized
21 they had a dispute where Mr. King was present, do you think
22 it's possible that Ms. Shiroishi was reiterating the same
23 explanation that she gave back in June and July or that she
24 says she gave back in June and July to AT&T folks because
25 Mr. King wasn't present at those meetings?

A No, she didn't reiterate it to us. She may have reiterated it internally to her own people.

Q Now, one more thing about your notes, Ms. Stevens. On Pages 8 and 9 of your testimony, you say that your meeting notes regarding a meeting on June 6th, 2001 state, and then you quote, local channel and dedicated transport definition; Bill to get with Dave Talbott to discuss BST explanation; Sam drew out BST diagrams. Do you see that?

A Yes, I do.

Q Now, your meeting notes from the June the 6th meeting begin on Page 26 of your Exhibit 1 to your testimony; correct?

A No. They begin on Page 22.

Q You're right. I'm sorry. My error. They begin on Page 22.

And the quote you reference in your testimony as being in your June 6th meeting notes, that doesn't appear anywhere in these notes that are attached to your testimony, does it?

A Yes, it does.

Q Okay. Can you point me to that?

A It would be probably three-fourths of the way down the page.

Q Page 22?

A Page 22 where it says, "1.9, leave open, AT&T will clarify BellSouth, or BST, drawing of local channel application

with Dave Talbott." And then further in 1.11, "Go back to Dave Talbott."

Q When you reference your meeting notes on Pages 8 and 9 of your testimony and have that reference in quotations, are you purporting to have a direct quote from your meeting notes?

A Yes. In the production of documents that we provided to BellSouth, and we provided it in North Carolina as well, there was a typed version of my notes. And I pulled my quote from my testimony from my typed version where it -- and if I may, I'll read right from my typed version here, and you have it in the production of documents that we gave. And it says, "Local channel and dedicated transport definitions; Bill to get with Dave Talbott to discuss BellSouth explanation; Sam drew out BellSouth diagrams."

Q Can we agree that that quotation you just read does not appear in the meeting notes that you attached as an exhibit to your testimony in this case?

A Yes, I can agree that it was not part of the exhibit to my testimony.

Q Mr. Peacock is your boss; correct?

A Correct.

Q And he told me in North Carolina that he told you that they needed you to file testimony in this case because you were the official note taker, and they needed you to confirm dates and conversations; correct?

A Correct.

Q And as we've discussed already, your notes don't confirm the conversations Mr. Peacock says he had with BellSouth about changing "ruling regulatory body" to "established by the state commission or the FCC," do they?

A I'm sorry, could you repeat the question?

Q Yeah. Your notes don't confirm Mr. Peacock's testimony that he had conversations with BellSouth about changing "ruling regulatory body" to "established by the state commission or the FCC," do they?

A I don't recall that I have that in my notes.

Q And your notes don't confirm Mr. Peacock's testimony that Ms. Shiroishi supposedly told him that BellSouth wanted that exception for switched access arrangements to deal with some potential rulings about ISP traffic or VOIP traffic either; correct?

A I think you asked me that earlier, and I stated that my notes do reflect there were conversations about those issues, but did my notes specifically say, Beth said this, no.

MR. SHORE: That's all I have. Thank you, Ms. Stevens.

COMMISSIONER DEASON: Staff.

MS. CHRISTENSEN: No questions.

COMMISSIONER DEASON: Commissioners.

Redirect.

REDIRECT EXAMINATION

BY MS. CECIL:

Q Ms. Stevens, what was your mode of operation relative to note taking? Did you take verbatim notes?

A No. I would -- sort of like you did in school, you would pick up the key words, you'd leave out the and's, the's, but's, you always identified who was in attendance and just what the issues are that you were negotiating.

Q Did you use a lot of shorthand abbreviations in your note taking?

A My writing is not the best, but no. I would abbreviate words at times or leave out, again, some nonessential words like and, and the, but.

Q Let's turn to Page 30 of Exhibit 1 to your rebuttal testimony.

A I'm there.

Q Okay. Do you see the entry at the top, "6/26/01"? Does is that represent June the 26th, 2001?

A Yes.

Q And does that BST represent BellSouth meeting?

A Yes, it does.

Q Could you read who attended that meeting across the sheet?

A Michael W., which would have been Michael Willis; Ed H., which would have been Ed Honeycutt; Beth; Leah; and

1 Lindsay, I think she was, like, an intern.
2 Q What do the next two lines say?
3 A "LATAwide calling, Jim Maziar with BellSouth wrote,
4 will set up call with him."
5 Q Now, is this Mr. Maziar that's here in the room with
6 us today?
7 A No.
8 Q Who is this Mr. Maziar?
9 A I never met him, but he is a BellSouth employee who
10 had provided AT&T some language on a UNE-P enhancement that
11 they were proposing to AT&T.
12 Q Okay. With respect to the LATAwide calling with
13 respect to local traffic?
14 A It was a LATAwide offering that CLECs could use if
15 they chose to in a UNE-P environment, but, yes, it involved how
16 local calls would be handled.
17 Q Let's turn over to Page 32 of your Exhibit Number 1.
18 Do you see in the middle of the page there, there are two
19 asterisks?
20 A Yes.
21 Q Could you read the language there that's got the two
22 asterisks by it?
23 A "XDSL, with an arrow, gave BellSouth redline version
24 by close of business Friday." And the second one says,
25 "LATAwide calling, BellSouth, or BST, will rework; we will send

1 feedback." And I see from these that I did abbreviate a lot.
2 Q Let's turn over to the next page, 33, and it's
3 dated -- it looks like 7/10/01, that would have been July the
4 10th, 2001?
5 A Correct.
6 Q Do you see about five lines down where it says,
7 "Michael sending LATA"? Do you see that?
8 A Yes.
9 Q Can you read that and tell us what that referred to?
10 A Michael sending LATAwide language to us. It would
11 have been Michael Willis, and this refers back to that LATAwide
12 offer that I said that Jim Maziar presented to us. They only
13 had it in a hard copy, and we needed our subject matter experts
14 to look at it, and we weren't getting an electronic version of
15 it. So she kept committing that she would send it and just had
16 not.
17 Q Now, look about three lines down where there's an
18 indentation. ISP, do you see that?
19 A Yes.
20 Q Could you read what that states?
21 A "ISP, request BellSouth mark up our version, meeting
22 with Beth to discuss," and then I just said, "possibly
23 conference call."
24 Q Okay. Now, let's turn over to Page 48 which was the
25 one that Mr. Shore asked you some questions about and the

1 meeting that happened on November the 16th, 2001. Again, I
2 think you indicated that that was after everyone understood
3 they had a dispute, and it was after the interconnection
4 agreement had been signed; is that not correct?
5 A That's correct.
6 Q At the top right before 11/16/01, what does it say?
7 A It says, "LATAwide local."
8 Q And can you tell who attended this meeting from
9 BellSouth?
10 A Yes. It would have been Ed Honeycutt, Beth
11 Shiroishi, Rhona Reynolds I believe her name is, and Shelly
12 Decker.
13 Q Okay. And then two lines down where it starts
14 "Beth," could you read that sentence for us, please.
15 A "Beth, BST understanding that Attachment 3 is
16 facilities-based, both have our own network and
17 interconnection," maybe, and then it says, you know -- do you
18 want me to keep reading? I'm sorry.
19 Q Please, just the rest of that sentence.
20 A "Attachment 2, dash, UNE-P."
21 Q Let's go down and do you see a circle where you've
22 got -- it looks like "FB only" on the --
23 A That's correct.
24 Q Okay. Could you read to us what it states there
25 beside where it starts "Beth"?

1 A "Beth made clear that offering right now is for
2 facility-based."
3 Q What's the next line say?
4 A "BellSouth interprets that language says anything in
5 quotes over switched access stays as is. Beth brought up point
6 that AT&T orders all as switched access lines, and they can
7 hold us to that via contract language."
8 Q Okay. So relative to Mr. Shore's questions to you,
9 certainly on November the 16th, you were putting in some amount
10 of detail what Ms. Shiroishi had said about the language in
11 dispute; is that not correct?
12 A That's correct.
13 Q If she had said that earlier in the negotiations,
14 would you have included it in your notes?
15 A Absolutely.
16 MR. SHORE: Objection --
17 COMMISSIONER DEASON: I'm sorry. It was an
18 objection?
19 MR. SHORE: Yeah. She's asking her to speculate, and
20 the witness testified she didn't even remember the parties
21 talking about this. So asking her if she would have put it in
22 her notes I think is an inappropriate question. There's no
23 foundation for that.
24 COMMISSIONER DEASON: Your objection is overruled.
25 The question stands; the answer does too.

BY MS. CECIL:

Q What was your answer?

A Absolutely.

MS. CECIL: No further questions.

COMMISSIONER DEASON: Exhibits.

MS. CECIL: Yes, we would move Exhibit 24.

COMMISSIONER DEASON: Without objection, show that Exhibit 24 is admitted.

(Exhibit 24 admitted into the record.)

COMMISSIONER DEASON: Thank you, Ms. Stevens.

THE WITNESS: Thank you.

(Witness excused.)

COMMISSIONER DEASON: I believe that's the last AT&T witness.

MS. CECIL: Yes, sir.

COMMISSIONER DEASON: BellSouth, you may call your next witness.

MR. SHORE: We call Beth Shiroishi.

ELIZABETH R. A. SHIROISHI

was called as a witness on behalf of BellSouth Telecommunications, Inc., and, having been duly sworn, testified as follows:

DIRECT EXAMINATION

BY MR. SHORE:

Q Ms. Shiroishi, were you sworn earlier this morning?

A Yes.

Q Can you state your full name and your business address for the record, please.

A Elizabeth R. A. Shiroishi, S-H-I-R-O-I-S-H-I. Business address is 675 West Peachtree Street, Atlanta, Georgia 30375.

Q Are you employed by BellSouth Telecommunications?

A Yes.

Q What's your job title?

A Director, interconnection services marketing.

Q Ms. Shiroishi, did you cause to be prefiled in this docket ten pages of testimony along with one exhibit -- excuse me, eight pages of testimony along with one exhibit?

A Yes.

Q Do you have any corrections or revisions to make to your testimony?

A I have some minor grammatical corrections.

Q Would you go ahead and make those, please.

A Yes. In direct testimony on Page 5, Line 4, the date should be -- instead of "July 19th, 2001," it should be "October 26, 2001."

And on Page 10, Line 8, where it currently reads, "This section is interrelated to Section 5.3.1," that reference should be "5.3.1.1."

Q And I think I might have misspoke a moment ago. You

had 12 pages of direct testimony?

A Yes. I'm sorry.

Q And did you also have eight pages of rebuttal testimony?

A Yes.

Q Do you have any corrections or revisions to make to your rebuttal testimony?

A Some minor revisions. On Page 4, Line 23, the section reference of "5.3.1" should also be "5.3.1.1," and the same correction on Page 7, Line 8.

Q Other than those corrections, Ms. Shiroishi, if I were to ask you today the questions that appear in your prefiled testimony, would your answers be the same?

A Yes.

MR. SHORE: We would move for the admission of Ms. Shiroishi's direct and rebuttal testimony, and ask that her one exhibit be marked and identified.

COMMISSIONER DEASON: The direct and rebuttal testimony, without objection, shall be inserted into the record. And the prefiled exhibit to the direct testimony shall be identified as Exhibit 24 -- I'm sorry, 25.

MR. SHORE: Thank you.

(Exhibit 25 marked for identification.)

1 BELLSOUTH TELECOMMUNICATIONS, INC.
2 DIRECT TESTIMONY OF BETH SHIROISHI
3 BEFORE THE FLORIDA PUBLIC SERVICE COMMISSION
4 DOCKET NO. 020919-TP
5 January 15, 2003
6
7 Q. PLEASE STATE YOUR NAME, YOUR POSITION WITH BELLSOUTH
8 TELECOMMUNICATIONS, INC. ("BELLSOUTH") AND YOUR BUSINESS
9 ADDRESS.
10
11 A. My name is Elizabeth R. A. Shiroishi. I am employed by BellSouth as Assistant
12 Director, Interconnection Services Marketing. My business address is 675 West
13 Peachtree Street, Atlanta, Georgia 30375.
14
15 Q. PLEASE PROVIDE A BRIEF DESCRIPTION OF YOUR BACKGROUND
16 AND EXPERIENCE.
17
18 A. I graduated from Agnes Scott College in Decatur, Georgia, in 1997, with a
19 Bachelor of Arts Degree in Classical Languages and Literature. I began
20 employment with BellSouth in 1998, as a pricing analyst in the Interconnection
21 Services Pricing Organization. I then moved to a position in product
22 management, and now work as Assistant Director, Interconnection Services
23 Marketing. In this position, I am responsible both for negotiating and for
24 overseeing the negotiations of Interconnection Agreements, as well as Local
25 Interconnection issues.

Q. WHAT IS THE PURPOSE OF YOUR TESTIMONY?

A. My testimony establishes that BellSouth has applied the appropriate charges pursuant to the definition of "Local Traffic" in the Interconnection Agreement between BellSouth and AT&T. Specifically, I testify that the Agreement is clear on its face, and it was BellSouth's intent at the time it entered into the Agreement, that calls that originated or terminated via switched access arrangements would not be included within the definition of "Local Traffic."

Issue 1: (a) Do the terms of the Second Interconnection Agreement as defined in AT&T's complaint apply retroactively from the expiration date of the First Interconnection Agreement as defined in AT&T's complaint, June 11, 2000, forward? (b) If the answer to Issue 1(a) is "yes", is AT&T entitled to apply the reciprocal compensation rates and terms of the Second Interconnection Agreement only from July 1, 2001, forward?

Q. DO THE TERMS OF THE SECOND INTERCONNECTION AGREEMENT AS DEFINED IN AT&T'S COMPLAINT APPLY FROM THE EXPIRATION DATE OF THE FIRST INTERCONNECTION AGREEMENT AS DEFINED IN AT&T'S COMPLAINT, JUNE 11, 2000, FORWARD?

A. Yes. Section 2.3 of the General Terms and Conditions of the First Interconnection Agreement states:

> The Parties further agree that in the event the Commission does not issue its order by the expiration date of this Agreement, or if the Parties

> continue beyond the expiration date of this Agreement to negotiate without Commission intervention, the terms, conditions and prices ultimately ordered by the Commission, or negotiated by the Parties, will be effective, retroactive to the day following the expiration date of this Agreement. Until the Follow-on Agreement becomes effective, BellSouth shall provide Services and Elements pursuant to the terms, conditions and prices of this Agreement that are then in effect.

The First Interconnection Agreement expired on June 10, 2000 pursuant to its express terms. However, the Second Interconnection Agreement or Follow-on Agreement did not become effective until October 26, 2001. Accordingly, Section 2.3 of the First Interconnection Agreement was invoked, and the terms, conditions, and prices of the Second Interconnection Agreement apply from June 11, 2000, forward.

Q. IS AT&T ENTITLED TO APPLY THE RECIPROCAL COMPENSATION RATES AND TERMS OF THE SECOND INTERCONNECTION AGREEMENT ONLY FROM JULY 1, 2001 FORWARD?

A. Yes. The Parties entered into a Confidential Settlement that addresses the treatment of reciprocal compensation and switched access traffic through July 1, 2001. Thus, the outcome of this case will only apply from July 1, 2001, forward.

Issue 2: Does the term "Local Traffic" as used in the Second Interconnection Agreement identified in AT&T's complaint include all "LATAwide" calls, including all calls originated or terminated through switched access arrangements as established by the state commission or FCC?

Issue 3: Under the terms of the Second Interconnection Agreement, do reciprocal compensation rates and terms apply to calls originated or terminated through switched access arrangements as established by the state commission or FCC?

Q. DOES THE TERM "LOCAL TRAFFIC" AS USED IN THE SECOND INTERCONNECTION AGREEMENT INCLUDE ALL "LATAWIDE" CALLS, INCLUDING ALL CALLS ORIGINATED OR TERMINATED THROUGH SWITCHED ACCESS ARRANGEMENTS AS ESTABLISHED BY THE STATE COMMISSION OR FCC?

A. No.

Q. UNDER THE TERMS OF THE SECOND INTERCONNECTION AGREEMENT, DO RECIPROCAL COMPENSATION RATES AND TERMS APPLY TO CALLS ORIGINATED OR TERMINATED THROUGH SWITCHED ACCESS ARRANGEMENTS AS ESTABLISHED BY THE STATE COMMISSION OR FCC?

A. No.

Q. PLEASE EXPLAIN THE DEFINITION OF "LOCAL TRAFFIC" AS IT IS SET FORTH IN THE INTERCONNECTION AGREEMENT.

A. Section 5.3.1.1 of Attachment 3 of the Interconnection Agreement dated ~~July 19,~~ October 26 ~~2001~~ 2001, defines Local Traffic as follows:

> The Parties agree to apply a "LATAwide" local concept to this Attachment 3, meaning that traffic that has traditionally been treated as intraLATA toll traffic will now be treated as local for intercarrier compensation purposes, **<u>except for those calls that are originated or terminated through switched access arrangements</u>** as established by the State Commission or FCC. (emphasis added)

Pursuant to this plain and unambiguous language, the Parties agreed to consider IntraLATA toll traffic as "Local Traffic" unless such traffic ***"originated or terminated through switched access arrangements as established by the State Commission or FCC."*** The exclusion is specifically targeted at intraLATA traffic.

Q. IS AT&T'S "INTERPRETATION" OF THE AGREEMENT THAT CALLS THAT ORIGINATE OR TERMINATE VIA SWITCHED ACCESS ARRANGEMENTS INCONSISTENT WITH THE EXPRESS LANGUAGE OF THE AGREEMENT?

A. Yes. AT&T is incorrect in its allegation that all calls transported and terminated within a "LATA" ("LATAwide Traffic") are subject to the local reciprocal compensation rates set forth in the Agreement. As the language quoted above

1 plainly says, if an intraLATA call originates or terminates through switched
2 access arrangements, then that call is excluded from the definition of Local
3 Traffic. Such a call would be governed by BellSouth switched access tariffs and
4 would be subject to the appropriate switched access rates. BellSouth has not
5 breached the Interconnection Agreement by charging AT&T switched access
6 rather than reciprocal compensation rates for intraLATA calls "originated or
7 terminated through switched access arrangements."
8
9 Q. WERE YOU INVOLVED IN THE NEGOTIATION OF THE CONTRACT
10 LANGUAGE AT ISSUE IN THIS PROCEEDING?
11
12 A. Yes. I was very involved in the negotiation of this language with the AT&T
13 negotiation team.
14
15 Q. WAS THERE DISCUSSION AND NEGOTIATION REGARDING THE
16 DEFINITION OF LOCAL TRAFFIC?
17
18 A. Yes. AT&T and BellSouth started the negotiations of the Second Interconnection
19 Agreement using a definition of local traffic that was similar to the definition in
20 the First Interconnection Agreement. During the course of negotiations,
21 BellSouth offered to AT&T a definition that it had used with other carriers. This
22 new definition expanded what was considered local within the LATA, but still
23 excluded minutes that traversed switched access arrangements that the carrier had
24 purchased from BellSouth. After discussion around the meaning of the definition
25 and the exclusion, AT&T responded to BellSouth that it would agree to this new

1 definition, but proposed a slight language change. The parties agreed upon the
2 language and incorporated it into the agreement. There was specific discussion
3 about the exclusion of traffic that originated or terminated through switched
4 access arrangements.
5
6 Q. PLEASE DISCUSS THE CHANGE IN LANGUAGE THAT THE PARTIES
7 NEGOTIATED.
8
9 A. BellSouth originally proposed that the exclusion language read "except for those
10 calls that are originated or terminated through switched access arrangements as
11 established by the ruling regulatory body." After discussion around what was
12 meant by "the ruling regulatory body," the Parties modified the words to read "except
13 for those calls that are originated or terminated through switched access
14 arrangements as established by the State Commission or FCC." In the course of
15 these discussions, the Parties discussed the fact that this reference was to the
16 switched access arrangements that are offered for purchase through each Party's
17 switched access tariffs, which are approved by the State Commission (for
18 intrastate switched access) or the FCC (for interstate switched access).
19
20 Q. WAS IT THE INTENT OF THE PARTIES TO INCLUDE AS LOCAL
21 TRAFFIC MINUTES THAT ORIGINATED OR TERMINATED THROUGH
22 SWITHCED ACCESS ARRANGEMENTS?
23
24 A. Absolutely not. The exclusion was specifically written in order to exclude from
25 the definition of local traffic calls that are considered switched access under tariff.

As stated above, we had extensive discussion about the exclusion of traffic that originated or terminated through switched access arrangements. In the course of those discussions, we drew diagrams on the whiteboard and discussed the role of switched access arrangements as outside the definition of local traffic. I was very surprised when AT&T informed BellSouth of its position on the definition of local traffic since we had had specific discussions about the exclusion.

Q. DOES BELLSOUTH HAVE THIS SAME DEFINITION OF LOCAL TRAFFIC IN INTERCONNECTION AGREEMENTS WITH OTHER ALECS?

A. Yes. BellSouth has multiple interconnection agreements with ALECs containing this same definition of local traffic as in the AT&T agreement, which contains the exclusion for switched access arrangements.

Q. HAS ANY OTHER ALEC INTERPRETED THIS LANGUAGE IN THE MANNER AT&T IS ATTEMPTING?

A. No.

Q. DOES BELLSOUTH HAVE AN INTERCONNECTION AGREEMENT WITH AT&T IN ANOTHER STATE THAT HAS A DEFINITION OF LOCAL TRAFFIC WHICH INCLUDES ALL TRAFFIC THAT ORIGINATES AND TERMINATES IN THE LATA?

A. Yes. In the agreement that governs the parties' relationship in Mississippi, the parties agreed that *all* calls in the LATA would be considered local. Thus, the definition simply reads: "Local Traffic means any telephone call that originates and terminates in the same LATA."

Q. IN AT&T'S COMPLAINT ON PAGE 10, AT&T ALLEGES THAT SECTION 5.3.3 STATES THAT IT IS INTERRELATED TO SECTION 5.3.1. PLEASE EXPLAIN THE REASON THAT THIS STATEMENT WAS INCLUDED IN THE AGREEMENT.

A. Section 5.3.3 states:

> Switched Access Traffic is defined as telephone calls requiring local transmission or switching service for the purpose of the origination or termination of Intrastate InterLATA and Interstate InterLATA traffic. Switched Access Traffic includes, but is not limited to, the following types of traffic: Feature group A, Feature Group B, Feature Group D, toll free access (e.g. 800/877/888), 900 access, and their successors. Additionally, if BellSouth or AT&T is the other party's end user's presubscribed interexchange carrier or if an end user uses BellSouth or AT&T as an interexchange carrier on a 101XXXX basis, BellSouth or AT&T will charge the other party the appropriate tariff charges for originating switched access services. The Parties have been unable to agree as to whether Voice over Internet Protocol ("VOIP") transmissions which cross local calling area boundaries constitute Switched Access Traffic.

> Notwithstanding the foregoing, and without waiving any rights with respect to either Party's position as to the jurisdictional nature of VOIP, the Parties agree to abide by any effective and applicable FCC rules and orders regarding the nature of such traffic and the compensation payable by the Parties for such traffic, if any; provided however, that any VOIP transmission which originates in one LATA and terminates in another LATA (i.e, the end-to-end points of the call), shall not be compensated as Local Traffic. This Section is interrelated to Section ~~5.3.1.~~ 5.3.1.1

The reference to the interrelationship was added as the Parties were negotiating mutually agreeable language to deal with Voice over Internet Protocol.

Q. DOES OTHER LANGUAGE IN ATTACHMENT 3 ADDRESS THE MIGRATION TO THIS NEW DEFINITION OF LOCAL TRAFFIC?

A. Yes. As stated earlier, the Parties agreed that the definition of Local Traffic in the Second Interconnection Agreement was to be different from the definition of Local Traffic in the First Interconnection Agreement. Further, the definition in the Second Interconnection Agreement related to the type of arrangement, or trunk group, that the traffic originated over or terminated through. As such, the parties included a provision in the Interconnection Trunking and Routing section (Section 3) of Attachment 3 that addressed this conversion. Section 3.1 states:

> The Parties will convert all existing interconnection arrangements and trunks to the interconnection arrangements described in this Attachment in accordance with this following . . .

The Section then goes on to give technical specifications as well as process information about starting the conversion. Further, and of important note, are the trunking arrangements described in the interconnection agreement. Sections 3.3.1, 3.17.1, 3.18.1, 3.19.1, and 3.20.1 describe the trunking arrangements that are available via this interconnection agreement. The pages from these Sections are attached as exhibit ERAS-1. The descriptions of the trunking arrangements make clear that they are for local and intraLATA toll traffic, and the trunking arrangements are not the same as the switched access trunking arrangements set forth in BellSouth's tariffs. Further, there is no provision in the interconnection agreement allowing for the combination of switched access arrangements with the interconnection arrangements set forth in the interconnection agreement.

Q. ARE THE PROVISIONS IN THE INTERCONNECTION AGREEMENT ADDRESSING THE COMPENSATION OWED FOR TRAFFIC RECIPROCAL?

A. Yes. Section 5.3.1 of Attachment 3 of the Interconnection states:

> The Parties agree to apply a "LATAwide" local concept to this Attachment 3, meaning that traffic that has traditionally been treated as intraLATA toll traffic will now be treated as local for intercarrier compensation purposes,

1 except for those calls that are originated or terminated through switched
2 access arrangements as established by the State Commission or FCC.
3
4 This language is written reciprocally, and thus applies to each Party equitably. To
5 the extent that BellSouth originated or terminated calls through switched access
6 arrangements as defined in the tariff, such calls would be subject to switched
7 access and not reciprocal compensation.
8
9 Q. DOES THAT CONCLUDE YOUR DIRECT TESTIMONY?
10
11 A. Yes.

1 BELLSOUTH TELECOMMUNICATIONS, INC.

2 REBUTTAL TESTIMONY OF BETH SHIROISHI

3 BEFORE THE FLORIDA PUBLIC SERVICE COMMISSION

4 DOCKET NO. 020919-TP

5 March 14, 2003

6

7 Q. PLEASE STATE YOUR NAME, YOUR POSITION WITH BELLSOUTH
8 TELECOMMUNICATIONS, INC. ("BELLSOUTH") AND YOUR BUSINESS
9 ADDRESS.

10

11 A. My name is Elizabeth R. A. Shiroishi. I am employed by BellSouth as Director,
12 Interconnection Services Marketing. My business address is 675 West Peachtree
13 Street, Atlanta, Georgia 30375.

14

15 Q. ARE YOU THE SAME ELIZABETH R.A. SHIROISHI WHO FILED DIRECT
16 TESTIMONY IN THIS CASE?

17

18 A. Yes.

19

20 Q. DOES THE EXPRESS EXCLUSION FROM THE DEFINITION OF LOCAL
21 TRAFFIC SET FORTH IN SECTION 5.3.1 OF ATTACHMENT 3 TO THE
22 INTERCONNECTON AGREEMENT REFERENCE "SWITCHED ACCESS
23 TRAFFIC" AS DEFINED IN SECTION 5.3.3, AS MR. KING CLAIMS ON
24 PAGES 10 AND 21-22?

25

A. No. Mr. King incorrectly claims that the exclusion of "switched access arrangements" from the local traffic definition in section 5.3.1 is synonymous with "Switched Access Traffic" as defined in Section 5.3.3. If that were true, the exclusion would state "Switched Access Traffic as defined in Section 5.3.3." Instead, the agreement specifically provides that the exclusion is for calls that are "originated or terminated through switched access arrangements." The term switched access arrangements is not the same as the specifically defined term "Switched Access Traffic."

Further, Mr. King's theory is not logical. The exclusion from the LATAwide definition of local traffic is specifically for a certain class of intraLATA traffic. AT&T's position, however, is that all calls in the LATA are local. If that were correct, there would be no need for the exclusion. The language would simply state that all calls in the LATA are local.

Q. DOES BELLSOUTH HAVE AN INTERCONNECTION AGREEMENT WITH AT&T IN ANOTHER STATE THAT HAS A DEFINITION OF LOCAL TRAFFIC WHICH INCLUDES ALL TRAFFIC THAT ORIGINATES AND TERMINATES IN THE LATA?

A. Yes. As stated in my direct testimony, in the agreement that governs the parties' relationship in Mississippi, the Parties agreed that all calls in the LATA would be considered local. Thus, the definition simply reads, "Local Traffic means any telephone call that originates and terminates in the same LATA." Mr. King's testimony is that the language at issue in the Florida agreement, which

specifically excludes traffic that originates or terminates over switched access arrangements, means the same thing as the broader Mississippi definition. If that were true, there would have been no reason to add the express exclusion. And that is not what the contract here says, in any event.

Q. ON PAGE 11 OF HIS DIRECT TESTIMONY, MR. KING STATES "WITH RESPECT TO THE DEFINITION OF 'SWITCHED ACCESS TRAFFIC' AS SET FORTH IN SECTION 5.3.3, THIS IS THE ONLY TYPE OF TRAFFIC FOR WHICH SWITCHED ACCESS CHARGES APPLY UNDER THE SECOND INTERCONNECTION AGREEMENT." PLEASE COMMENT.

A. First and foremost, switched access charges are governed and apply in accordance with the terms of tariffs, in this case either BellSouth's or AT&T's. An interconnection agreement may reference such tariffs, but those tariffs are stand-alone documents that are filed and approved by the State Commission (for intrastate services) or the FCC (for interstate services) and that apply pursuant to their own terms. Second, consistent with BellSouth's tariffs, the interconnection agreement between BellSouth and AT&T clearly excludes from the definition of "local" any call that originates or terminates through switched access arrangements.

Q. PLEASE ADDRESS THE "INTERRELATED" LANGUAGE IN SECTION 5.3.3 AND MR. KING'S ASSERTIONS ON PAGES 11 THROUGH 16 REGARDING THE ALLEGED MEANING OF THAT LANGUAGE.

A. Section 5.3.3 states:

> Switched Access Traffic is defined as telephone calls requiring local transmission or switching service for the purpose of the origination or termination of Intrastate InterLATA and Interstate InterLATA traffic. Switched Access Traffic includes, but is not limited to, the following types of traffic: Feature group A, Feature Group B, Feature Group D, toll free access (e.g. 800/877/888), 900 access, and their successors. Additionally, if BellSouth or AT&T is the other party's end user's presubscribed interexchange carrier or if an end user uses BellSouth or AT&T as an interexchange carrier on a 101XXXX basis, BellSouth or AT&T will charge the other party the appropriate tariff charges for originating switched access services. The Parties have been unable to agree as to whether Voice over Internet Protocol ("VOIP") transmissions which cross local calling area boundaries constitute Switched Access Traffic. Notwithstanding the foregoing, and without waiving any rights with respect to either Party's position as to the jurisdictional nature of VOIP, the Parties agree to abide by any effective and applicable FCC rules and orders regarding the nature of such traffic and the compensation payable by the Parties for such traffic, if any; provided however, that any VOIP transmission which originates in one LATA and terminates in another LATA (i.e, the end-to-end points of the call), shall not be compensated as Local Traffic. This Section is interrelated to Section ~~5.3.1~~ 5.3.1.1

As stated in my direct testimony, the reference to the interrelationship was added as the Parties were negotiating mutually agreeable language to deal with Voice over Internet Protocol ("VOIP"). The correspondence between the Parties at the time of negotiation regarding attachment 3 of Second Interconnection Agreement establishes that the Parties actually inserted the agreement's definition of local traffic, **WITH** the exclusion for traffic that originates or terminates through switched access arrangements, **BEFORE** Section 5.3.3 was inserted. In fact, the negotiation correspondence makes clear that Section 5.3.3 was inserted solely to deal with the issue of VOIP traffic. The issue of VOIP was raised through the context of Switched Access Traffic because that's where the disagreement centered: were VOIP transmissions switched access or not? As you can see from

the language, the Parties agreed to disagree on this issue. However, they agreed that VOIP transmissions would not be compensated as local. Because VOIP transmissions are not routed over switched access arrangements, the language simply makes clear that VOIP transmissions that originate and terminate in different LATAs shall not be compensated as local. This language was then interrelated back to Section 5.3.1.1 because in that Section, the Parties agreed that, subject to the exception of calls that originated or terminated over switched access arrangements, all other calls within the LATA would be treated as local.

If the Parties had agreed for compensation purposes that local calls would be anything that originated and terminated in the traditional local calling area as specified in the tariff, then the VOIP language would have needed to state that VOIP transmissions that originate and terminate in different local calling areas would not be treated as local. The interrelationship language ensures that, if a Party requested to adopt the VOIP provisions of the BellSouth AT&T agreement, it would also need to adopt the definition of local traffic. If not, there could be an inconsistency between the adopting carrier's definition of local traffic and its application in the VOIP transmission provisions. It is very important to note that the interrelationship language appears in 5.3.3, but not in 5.3.1.1. If Mr. King's theory was true, the Parties would have inserted language in the local traffic definition relating it to Section 5.3.3. This is not the case. Instead, the Parties inserted the interrelationship language in Section 5.3.3 because of the potential discrepancy described above if a carrier adopted Section 5.3.3 without 5.3.1.1. However, there is no issue if a carrier wants to adopt Section 5.3.1.1 without Section 5.3.3.

1 Q. PLEASE ADDRESS MR. KING'S ASSERTIONS ON PAGE 16 AND 17 THAT
2 THE EXCLUSION IN THE LOCAL TRAFFIC DEFINITION WAS AIMED AT
3 ISP-BOUND TRAFFIC AND VOIP TRAFFIC.
4
5 A. It is not true. If the Parties had intended to exclude from the definition of "local"
6 VOIP or Switched Access Traffic, then that's what the Agreement would state.
7 Instead, the provision for local traffic first states that the call must be intraLATA,
8 and then applies an exclusion for anything that originates and terminates over
9 switched access arrangements as established by the State Commission or FCC.
10 Importantly, the FCC made a determination regarding the jurisdictional nature of
11 ISP-bound traffic before the Parties entered into this agreement. And since
12 BellSouth's position regarding VOIP transmissions is and always has been that
13 access charges should apply to those transmissions where the end points of the
14 call are not in the same local calling area, there was absolutely no need to add the
15 exclusion to address VOIP or ISP-bound traffic.
16
17 Q. ON PAGE 24, MR. KING STATES THAT THERE IS NOT ANY LANGUAGE
18 IN THE INTERCONNECTION AGREEMENT PROVIDING FOR THE
19 ENTITLEMENT TO CHARGE SWITCHED ACCESS RATES. PLEASE
20 COMMENT.
21
22 A. There is no reason that the interconnection agreement would address switched
23 access rates. BellSouth's tariffs, which are approved by this Commission for
24 intrastate access and by the FCC for interstate access, are the controlling
25 documents for switched access arrangements purchased from them and the traffic

flowing over such arrangements. As such, tariffs, and not the interconnection agreement, provide for the entitlement of switched access rates.

Q. PLEASE ADDRESS MR. KING'S QUESTIONS ON PAGES 26 THROUGH 28 ADDRESSING THE RECIPROCITY OF THE TERMS AND CONDITIONS FOR COMPENSATION OWED FOR LOCAL TRAFFIC.

A. Section ~~5.3.1~~ 5.3.1.1 of Attachment 3 to the Interconnection Agreement states:

> The Parties agree to apply a "LATAwide" local concept to this Attachment 3, meaning that traffic that has traditionally been treated as intraLATA toll traffic will now be treated as local for intercarrier compensation purposes, except for those calls that are originated or terminated through switched access arrangements as established by the State Commission or FCC.

As stated in my direct testimony, this language is written reciprocally, and thus applies to each Party equitably. To the extent that BellSouth originated or terminated calls through switched access arrangements as defined in the tariff, such calls would be subject to switched access and not reciprocal compensation rates.

Q. ON A GOING FORWARD BASIS, CAN AT&T ELECT ANOTHER DEFINITION OF LOCAL TRAFFIC IN ITS INTERCONNECTION AGREEMENT WITH BELLSOUTH?

A. Yes. Section 252(i) of the Telecommunications Act of 1996 allows a carrier to adopt any interconnection, service, or network element from any other effective,

1 filed and approved agreement for the remaining term of the agreement as long as
2 AT&T takes with it all interrelated rates, terms, and conditions. Thus, AT&T
3 could choose to adopt from any other filed and approved interconnection
4 agreement with BellSouth the definition of local traffic found in that agreement,
5 along with the interrelated rates, terms, and conditions.
6
7 Q. DOES THAT CONCLUDE YOUR TESTIMONY?
8
9 A. Yes.

BY MR. SHORE:

Q Now, Ms. Shiroishi, have you prepared a summary of your testimony?

A Yes.

Q Would you give that now for the Commissioners.

A Thank you. Good afternoon. The issue in this case is really very simple. What did BellSouth and AT&T agree would be considered local under their interconnection agreement dated October 26, 2001?

If a call is local, then the reciprocal compensation rate set forth in the parties' interconnection agreement apply. If a call is not local, then switched access rates set forth in the parties' switched access tariffs apply. The agreement is clear on what is and is not local traffic. It says, "The parties agree to apply a LATAwide local concept to this Attachment 3, meaning that traffic that has traditionally been treated as intraLATA toll will now be treated as local for intercarrier compensation purposes, except for those calls that are originated or terminated through switched access arrangements as established by the state Commission or FCC."

There's a clear exclusion for calls that are originated or terminated through switched access arrangements as established by the state commission or FCC, and that clear exclusion applies to the first part of the sentence, "traffic that has traditionally been treated as intraLATA toll traffic."

1 During negotiations with AT&T, I specifically
2 explained to AT&T's negotiators, including its lead negotiator
3 Mr. Peacock, that the exclusion applied to calls that traverse
4 switched access arrangements. I even drew diagrams to make
5 sure I was clear. Other than requesting a minor change that
6 was not material, AT&T did not ask to change the language or
7 express that it interpreted the language any differently.
8 One of the arguments AT&T has come up with to try to
9 convince you that the exclusion language doesn't mean what it
10 says is its claim that switched access arrangements, a term
11 that is not capitalized, means "switched access traffic" as
12 that term is specifically defined and capitalized in the later
13 section of Attachment 3.
14 The definition of "switched access traffic" in
15 Section 5.3.3 was inserted to address voice over IP or Internet
16 protocol transmissions.
17 COURT REPORTER: Commissioner Deason, I'm having
18 technical difficulties with my equipment. Could we please go
19 off the record?
20 COMMISSIONER DEASON: Surely. We'll just go ahead
21 and take a ten-minute recess at this time.
22 (Brief recess.)
23 COMMISSIONER DEASON: We'll go back on the record.
24 Ms. Shiroishi, we had a slight malfunction, and we're going to
25 ask that you begin your summary again at the beginning.

1 THE WITNESS: Okay.
2 COMMISSIONER DEASON: Thank you.
3 THE WITNESS: Good afternoon. The issue in this case
4 is really very simple. What did BellSouth and AT&T agree would
5 be considered local under their interconnection agreement dated
6 October 26, 2001? If a call is local, then reciprocal
7 compensation rates in the parties' interconnection agreement
8 are the appropriate rates. If a call is not local, then
9 switched access rates in each party's tariff apply.
10 The agreement is clear on what is and is not local
11 traffic. It says, "The parties agree to apply a LATAwide local
12 concept to this Attachment 3, meaning that traffic that has
13 traditionally been treated as intraLATA toll traffic will now
14 be treated as local for intercarrier compensation purposes,
15 except for those calls that are originated or terminated
16 through switched access arrangements as established by the
17 state commission or FCC."
18 There is a clear exclusion for calls that are
19 originated or terminated through switched access arrangements,
20 and that clear exclusion applies to the first part of the
21 sentence, "traffic that has traditionally been treated as
22 intraLATA toll traffic."
23 During negotiations with AT&T, I specifically
24 explained to AT&T's negotiators, including its lead negotiator
25 Mr. Peacock, that the exclusion applied to calls that traverse

1 switched access arrangements that are purchased out of each
2 party's intra- and interstate tariffs. I even drew diagrams to
3 make sure I was clear. Other than requesting a minor change to
4 the language that was not material, AT&T did not ask to change
5 the language or express that it interpreted the language any
6 differently.
7 One of the arguments AT&T has come up with to try to
8 convince you that the exclusion doesn't mean what it says is
9 its claim that switched access arrangements, a term that is not
10 capitalized, means "switched access traffic" as that term is
11 specifically defined and thus capitalized in a later section of
12 Attachment 3.
13 The definition of switched access traffic in
14 Section 5.3.3 was inserted to address compensation for voice
15 over Internet protocol transmissions. Prior to negotiating
16 language to address VOIP transmissions, there was no definition
17 of switched access traffic in the contract. The issue of VOIP
18 was raised through the context of switched access traffic
19 because that's where the disagreement centered. Were VOIP
20 transmissions switched access or not?
21 In the contract, the parties agreed to disagree on
22 this issue. However, they agreed that VOIP calls would not be
23 compensated as local. Since VOIP transmissions are not routed
24 over switched access arrangements, the language just states
25 that VOIP transmissions that originate and terminate in

1 different LATAs shall not be compensated as local.
2 We then stated that this provision was interrelated
3 to Section 5.3.1.1 since that's where the parties agreed that
4 with the exception of calls that originated or terminated over
5 switched access arrangements, calls within the LATA would be
6 treated as local.
7 If the parties had agreed for compensation purposes
8 that local calls would be anything that originated and
9 terminated in the traditional local calling area as specified
10 in either party's tariff, then the VOIP language would have
11 needed to state that VOIP transmissions which originate and
12 terminate in different local calling areas would not be treated
13 as local.
14 The interrelationship language would ensure that if
15 another ALEC requested to adopt the VOIP transmission
16 provisions of the BellSouth/AT&T agreement, it would also need
17 to adopt the definition of local traffic. If not, there could
18 be an inconsistency between the adopting carrier's definition
19 of local traffic in its application to the VOIP transmission
20 provisions.
21 Let me take a moment to talk about the term
22 "interrelated." The term "interrelated" has a very specific
23 meaning in the telecom industry because of Section 252(i) of
24 the Telecom Act of 1996. That section sets forth that "a local
25 exchange carrier shall make available any interconnection

service or network element provided under an agreement approved under this section to which it is a party to any other requesting telecommunications carrier upon the same terms and conditions as those provided in the agreement." This is often referred to as pick and choose or most favored nation right that ALECs have to adopt provisions from other ALECs' agreements.

In interpreting Section 252(i) of the Act, the FCC ruled that an ALEC requesting a provision from another ALEC's agreement must also take with it any legitimate rate, term, or condition. Thus the concept of legitimately related or interrelated provisions is a term of art in the telecom industry to identify such things that are necessary to be adopted together.

Mr. Peacock claims that I told him that BellSouth wanted the exception for calls carried over switched access arrangements in Section 5.3.1.1 in order to address VOIP and ISP traffic. That's simply not true, and I never said anything like that.

The agreement specifically addresses the treatment of both ISP traffic and VOIP transmissions and other provisions, and quite frankly, BellSouth didn't need the protection that Mr. Peacock claims the language was inserted to address. That's because before I even proposed the language at issue here to AT&T, the FCC had already ruled that ISP traffic was

1 not subject to reciprocal compensation. And BellSouth's
2 position is and was that VOIP transmissions are interLATA, so
3 we didn't need protection from our position.
4 In conclusion, this case boils down to common sense.
5 AT&T would have you believe through its convoluted arguments
6 that the exclusion in the definition of local traffic means
7 absolutely nothing. Does that past the common sense test?
8 Would the parties have agreed to an exclusion that excludes
9 nothing? Would the parties have agreed to a statement in a
10 contract that's meaningless? Of course not. The exclusion in
11 Section 5.3.1.1 was intended to do just what it says: Exclude
12 from the local traffic definition any call that is originated
13 or terminated through switched access arrangements. Thank you.
14 MR. SHORE: This witness is available for cross.
15 COMMISSIONER DEASON: AT&T.
16 MS. CECIL: Thank you, Commissioner.
17 CROSS EXAMINATION
18 BY MS. CECIL:
19 Q Ms. Shiroishi, I want to clarify a couple of things.
20 I might have missed something. The summary that you gave today
21 is different than the summary that you gave in North Carolina,
22 is it not?
23 A Portions of it are different, but the substance of it
24 is the same.
25 Q Well, you added today a fairly different and new

1 discussion about what the term "interrelated" means under the
2 Telecom Act, the pick and choose rules; is that not correct?
3 A I don't think that we addressed that very
4 substantially in the North Carolina summary.
5 Q Could you show me where in your testimony, either in
6 your direct testimony or in your rebuttal testimony, you filed
7 any testimony that related to what "interrelated" means under
8 the Telecom Act? Did you use the term "pick and choose" in
9 your rebuttal or direct testimony? And where did you talk
10 about the status of interrelated meaning most favored nations
11 in your testimony?
12 A In the testimony, we talk about the interrelated
13 provisions. Give me just a moment. The interrelationship is
14 discussed on Page 10 of the direct testimony.
15 Q Could you give me a line reference?
16 A Yes. Lines 10 and 11.
17 Q Would you read those into the record, please.
18 A "The reference to the interrelationship was added as
19 the parties were negotiating mutually agreeable language to
20 deal with voice over Internet protocol."
21 Q Okay. If I could stop you there. That has nothing
22 to do with pick and choose, that has nothing to do with the
23 Telecommunications Act, that has nothing to do with most
24 favored nations status, does it?
25 A Well, the interrelationship that's discussed there is

1 in connection with all of those type things.
2 Q Well, my point is that you testified that you were
3 summarizing your testimony, and you gave us information about
4 your interpretation of what "interrelated" means, and I'm just
5 trying to find where that interpretation is in your testimony.
6 A Again, in the testimony, we talk about the fact that
7 the -- of the statement of interrelationship, and I believe
8 there are more -- there's another section in the rebuttal
9 testimony. If you'll give me just a moment.
10 I'm on Page 3 of the rebuttal testimony, starting on
11 Line 22 where I'm addressing Mr. King's testimony about
12 interrelated. And then Page 4 and Page 5.
13 Q Okay. I've read all of those pages, and I don't see
14 any reference in any of those pages to what you summarized in
15 your testimony about what "interrelated" means relative to the
16 pick and choose rule under the Telecom Act. I agree that you
17 used the term "interrelated," but your testimony today was
18 summarizing the impact of that term as it operates under the
19 pick and choose rule of the Telecom Act.
20 A On Page 5 of my rebuttal testimony, Line 14, it
21 discusses the adoption impact starting with "The
22 interrelationship language ensures that, if a party requested
23 to adopt the VOIP."
24 Q Anyplace else in your testimony?
25 A The rest of that page discusses that again.

1 Q Okay.
2 A And again on Line 23 where it talks about "because of
3 the potential discrepancy described above if a carrier adopted
4 Section 5.3.3 without 5.3.1.1."
5 Q Okay. Again, now, if you've covered all the sections
6 of your testimony that deal with interrelated, I guess I'll ask
7 the question one more time, and this will be the last time.
8 Is there any testimony that you have filed that deals
9 with how to interpret the words "interrelated under the
10 Telecommunications Act of 1996"?
11 A And my answer would be as it was earlier, that the
12 testimony discusses what "interrelationship" means in the
13 context of adoption and that is pursuant to Section 252(i) of
14 the Telecommunications Act.
15 Q But you didn't mention 252(i) in any of your
16 testimony, did you?
17 A I do not believe so. I don't believe I used those
18 words, although it's clearly discussed that it was put into a
19 deal with adoptions which is pursuant to Section 252(i).
20 Q Okay. Let's get some background information before
21 we move to specific language in the Mississippi agreement as
22 well as in the Florida agreement. I'm going to be asking you
23 about several documents today. Could you tell me which ones
24 you have available before you today?
25 A I have the complaints filed -- the complaint filed by

1 AT&T, as well as BellSouth's response, AT&T's direct testimony,
2 but I don't have all of the exhibits, BellSouth's direct
3 testimony, AT&T's rebuttal testimony, but again I don't have
4 all the exhibits, BellSouth's rebuttal testimony, my deposition
5 in North Carolina and Florida, Section E6 of the
6 BellSouth-Florida intrastate switched access tariff. Those are
7 the documents that were filed in this case.
8 Q So you don't have the North Carolina transcript
9 before you?
10 A I do not have that up here.
11 Q Okay. How recently have you read your deposition
12 testimony in North Carolina?
13 A North Carolina? Probably a week or so ago.
14 Q How about Florida?
15 A Florida I read a few days ago.
16 Q How recently have you read the transcript from North
17 Carolina?
18 A In the last several weeks.
19 Q Okay. Let's get some background information first.
20 Regarding your education, your testimony indicates that you
21 graduated in 1997 from Agnes Scott College in Atlanta with a
22 Bachelor's degree in classical languages and literature; is
23 that correct?
24 A That is.
25 Q And after you graduated from undergraduate school,

1 you taught high school for a year?
2 A Correct.
3 Q And then you joined BellSouth in 1998 as a pricing
4 analyst; is that correct?
5 A Yes.
6 Q And you've previously testified when you took that
7 job you had no prior telecom experience; is that correct?
8 A That is correct.
9 Q And when you took the pricing analyst job, I believe
10 you've testified that your main qualification for that position
11 was that you knew something about spreadsheets, Excel
12 spreadsheets, but you had no specific training in telecom; is
13 that not correct?
14 A That is correct.
15 Q And when you were in that pricing analyst job, you
16 were promoted once in place, were you not?
17 A Yes.
18 Q And you stayed in that job until 1999?
19 A Correct.
20 Q And then you were promoted again when you moved to a
21 collocation manager position; is that correct?
22 A Yes.
23 Q Now, when you moved to the collocation manager
24 position, did you know much about telecommunications networks?
25 A In the job as pricing analyst, as I said in North

1 Carolina and in the Florida deposition, I did deal with
2 configurations of wholesale type offerings by BellSouth as well
3 as other ILECs. So I did have an understanding of the
4 networks, yes.
5 Q And you obtained that knowledge in what period of
6 time?
7 A The time that I was a pricing analyst for BellSouth
8 from July of 1998 until taking the collocation job in -- I
9 believe it was in January of 1999.
10 Q So in about a year's time, that's when you got
11 your --
12 A Year and a half.
13 Q -- knowledge of networks and interconnection?
14 A Yes.
15 Q Now, I believe that you testified in North Carolina
16 that when you took that position, that you really had no
17 specific knowledge related to collocation, did you not?
18 A Other than what I discussed earlier with the network
19 information and the impact of that.
20 Q All right. Well, let's look at the North Carolina
21 transcript, Volume 2, Page 56.
22 A Is that up here? Can you give me that page reference
23 again?
24 Q Yes. It's Page 56, it's Line 23 -- Line 20. I
25 believe up above in the paragraph we're talking about when you

1 were promoted in the collocation manager position. And on
2 Line 20, I ask you: So you're taking the position today that
3 you had no knowledge -- that you had knowledge of networks when
4 you went into that collocation product manager position?
5 Do you see that?
6 A Yes.
7 Q And your answer was?
8 A "Knowledge as the result of a pricing analyst,
9 nothing specific to collocation."
10 Q Nothing specific as to collocation.
11 All right. So then you stayed in that collocation
12 position for, what, six months?
13 A Yes.
14 Q And at that point in time, you had been at BellSouth
15 for a year and a half, and you had already been promoted twice?
16 A Correct.
17 Q And after your collocation manager job, you became an
18 interconnection negotiator; is that correct?
19 A Yes.
20 Q You told me in North Carolina that you moved into
21 that position of interconnection negotiator for "career
22 purposes." Do you remember that?
23 A Yes.
24 Q And by "career purposes," do you mean in order to get
25 promoted again?

A No. That move was not a promotion. I took that position to enhance my knowledge about the wholesale industry and to gain more skills in different areas.

Q Well, let's tackle it a different way. Since you moved into that interconnection negotiation position for career purposes, how many more times have you been promoted?

A Since that point in time?

Q Yes.

A I've moved up three more levels at BellSouth.

Q And when did you go into that interconnection negotiation position?

A I believe that was January of '99.

Q My understanding, as I count it, you've been at BellSouth for five years, and you've been promoted five times, almost once a year?

A Yeah.

Q And you're currently one level below vice president at BellSouth?

A Actually, no. There's a senior director position at BellSouth that's in between.

Q Let's talk specifically about the interconnection negotiation position as it relates to this agreement. You stayed in that position for about a year, as I understand it; correct?

A Correct.

1 Q And what were your job responsibilities as an
2 interconnection negotiator?
3 A I had responsibility for a set number of CLEC
4 accounts, or ALEC accounts, and negotiated those agreements
5 with the ALECs. In that role, I was responsible for the
6 overall maintenance of the agreement, negotiations of the
7 agreement, coordinating this negotiation meetings, the SME
8 meetings, those type of things. And I also worked on some
9 other issues in that role to support my manager.
10 Q Okay. So in that position, you had to have, I
11 assume, good knowledge of all aspects of the interconnection
12 negotiation process, processes to follow, as well as
13 substantive knowledge of the terms and conditions. Would that
14 be fair?
15 A Yes. Again, I was not a subject matter expert for
16 those but did need to be familiar with them.
17 Q Okay. Then in mid 2000, you started managing other
18 contract negotiators, didn't you?
19 A Yes.
20 Q And you stayed in this supervisory role until
21 March of 2001 when you were asked to assume even greater
22 responsibilities as a subject matter expert; isn't that
23 correct?
24 A Yes. Actually, it might have even been prior to
25 March of 2001, but, yes, around that time frame.

1 Q And you became a subject matter expert in
2 interconnection in particular; isn't that correct?
3 A Yes. As stated earlier, I had supported my manager
4 in issues prior to that in my other role, one of which was the
5 issue of ISP traffic, local interconnection, and had actually
6 testified before this Commission on those issues prior in that
7 role. And then at that point in time, yes, I did become the
8 local interconnection subject matter expert for negotiations
9 purposes.
10 Q Okay. Just a couple more background questions. So
11 what were your responsibilities when you became a subject
12 matter expert in interconnection?
13 A Responsibilities in negotiating?
14 Q Uh-huh, in that position.
15 A In that position. I worked with the product team at
16 BellSouth who does the local interconnection product to
17 understand all the impacts of that and to be the spokesperson
18 for BellSouth in negotiating local interconnection issues
19 externally with commissions and with CLECs and ALECs, as well
20 as internally for policy reasons. Again, I was the person who
21 had, I guess, the authority at that point to make decisions on
22 language and how the contract would state BellSouth's position
23 and policy, as well as working internally on those type issues.
24 Q And it's my understanding from what you've told me in
25 past depositions, an interconnection is technically a product

1 that is offered by BellSouth?
2 A Yes. Again, it's a regulated product, so it's not --
3 it has a bit of a different twist when you say "product," but,
4 yes, it does have product managers and particular people who
5 work on that product and implementing that in accordance with
6 regulation.
7 Q Is that a wholesale product or a retail product?
8 A Wholesale product.
9 Q Can you describe in more specific terms what
10 "interconnection as a product" means?
11 A Interconnection as a product is when BellSouth
12 interconnects its network with other carriers. And for
13 purposes of what we've been talking about, I think we have been
14 leaving off the word "local" in some instances, but that is
15 what, to clarify the record, we're talking about here is local
16 interconnection which is something that was put in obviously by
17 the '96 Telecom Act and actually a little ahead of the schedule
18 in Florida. In '95, we started interconnecting on a local
19 basis.
20 So, again, it's the interconnection of those two
21 networks, basically, where an ALEC has its network, BellSouth
22 has its network and we -- to use a very untechnical term --
23 hook those two networks together in order to exchange local
24 traffic.
25 Q Would it also include situations where AT&T wanted to

order facilities from BellSouth?

A For local interconnection purposes?

Q Yes.

A Yes. That is part of interconnection is the actual, again, quote, hooking together those networks and then how we compensate each other for that.

Q How about if AT&T wanted to order switched access arrangements from BellSouth? Would that fall in the interconnection product as well?

A That would be in the switched access product which has actually a different team and product manager, but there are some similarities in the way that those products are structured. From a technical standpoint, there are differences as well.

Q So when you became the subject matter expert for interconnection, I believe I've calculated this correctly, but you'd been at BellSouth at that point in time about three years; is that correct?

A I don't have the dates in front of me. I didn't bring my resumé, but approximately.

Q And all of your knowledge about interconnection, networks, facilities came from your work experience at BellSouth. You brought nothing in terms of professional education to the table relative to that product; isn't that correct?

1 A Well, I would say, I mean, BellSouth has a fairly
2 extensive training program as well, so obviously I've attended
3 classes and attended training sessions hosted or provided by
4 BellSouth, as well as externally.
5 Q Do you remember in your North Carolina deposition I
6 asked you several questions about trunking arrangements,
7 facilities, and you indicated that your knowledge was based on
8 what other subject matter experts at BellSouth had told you?
9 Do you remember that?
10 A I remember that discussion, yes.
11 Q Now, you've testified, I believe, in deposition that
12 it was in the April, May 2001 time frame that you first became
13 involved in the AT&T negotiations; is that correct?
14 A Correct.
15 Q And at that time, AT&T had already filed its
16 arbitration in Florida and several other states; is that not
17 correct?
18 A Correct.
19 Q And in fact, in Florida, the parties had been
20 negotiating for well over a year when you arrived on the scene;
21 is that not also correct?
22 A That is.
23 Q So you actually came to the process fairly late in
24 that you came in April or May of 2001, and by July the 19th, as
25 we'll discuss in a few minutes, the parties had reached

1 agreement particularly on the clauses that are in dispute in
2 this proceeding; is that not correct?
3 A Correct. Again, and we've talked about these dates,
4 but just to clarify, BellSouth and AT&T had been negotiating
5 for many months prior, actually, years. I believe the
6 arbitration that AT&T filed was in June of 2000, and then we
7 went through those arbitration proceedings in all of the states
8 except Mississippi, and BellSouth and AT&T continued to try to
9 resolve issues. We actually picked back up, I would say in a
10 fairly substantial manner, negotiating local interconnection
11 type issues in that April, May time frame. But there was a
12 time period there where the arbitrations where going on where
13 we did have discussions, but I wouldn't say they were
14 substantial local interconnection discussions at that point.
15 Q Now, when you joined the team in April or May of
16 2001, who was BellSouth's lead negotiator?
17 A For AT&T?
18 Q Yes.
19 A Michael Willis.
20 Q Why were you added to the team?
21 A Again, Michael Willis is the negotiator who's
22 responsible for the overall compilation of the agreement,
23 bringing the subject matter experts to the table to reach
24 agreement on those type things. And there are things that the
25 interconnection negotiator can speak to from a policy

1 standpoint for BellSouth, but anytime you get into a technical
2 type of environment, whether it be on unbundled network
3 elements, loops, how we're going to do DSL type things versus
4 local interconnection, typically there are additional players
5 that come to the table as subject matter experts for
6 negotiations. So that was my role.
7 Q Well, AT&T had already filed its arbitration
8 petition, it had already been negotiating a year, and would you
9 not agree that one of the issues that the parties were
10 negotiating was point of interconnection? Do you recall that?
11 A Yes.
12 Q If you didn't come on the scene until April or May of
13 2001, who was negotiating point of interconnection for
14 BellSouth with AT&T?
15 A Prior to my involvement, Tim Watts was involved.
16 Q And did you replace Mr. Watts?
17 A For that responsibility purpose, yes.
18 Q Was there some understanding that his job was -- he
19 was performing unsatisfactorily?
20 A No. At that point, he took another position within
21 BellSouth, and so his exact job was actually divided up to some
22 extent. It wasn't replaced totally with another person. But I
23 took half of his responsibilities, that half being the
24 interconnection negotiations portion, and another manager took
25 some other responsibility.

1 Q Are you saying he moved to another CLEC or another
2 ALEC?
3 A No. He took another position within BellSouth.
4 Q Outside of the interconnection team?
5 A Yes.
6 Q Okay. And what about Ms. Willis's performance? Was
7 there any concern at BellSouth about how she was handling the
8 AT&T negotiations?
9 A No, not to my knowledge.
10 Q Who assigned you to the team?
11 A Pardon?
12 Q Who assigned you to the team?
13 A Well, I guess at that point it was actually offered
14 as an offer made to me as additional job responsibilities from
15 my supervisor Jerry Hendrix.
16 Q Okay. Now, at the time you got involved in the AT&T
17 negotiations, had AT&T and BellSouth already agreed to the
18 Mississippi agreement?
19 A Yes. The -- again, I don't believe the agreement had
20 actually been signed at that point in time, but the language
21 had been agreed to.
22 Q So you really had nothing to do with Mississippi?
23 A Not on the definition of local traffic. I did get
24 involved in some other issues that we were closing out towards
25 the end, but not on the definition of local traffic.

1 Q Do you know why BellSouth agreed to the LATAwide
2 definition for local traffic in Mississippi?
3 A I really don't know specifically. Again, I wasn't
4 involved in that, and at the time I came on the scene that had
5 been agreed to.
6 Q Well, I think you told me that one of your
7 responsibilities is to make sure the contracts get implemented
8 after they are executed; is that not correct?
9 A That is correct.
10 Q So you've got responsibility for implementing the
11 Mississippi agreement today; isn't that correct?
12 A That is correct.
13 Q And did you hear Mr. King testify earlier today that
14 even though there is that definition of local traffic, that
15 BellSouth is charging AT&T switched access rates for some LATA
16 traffic in Mississippi?
17 A I did. And I have to say that's the -- I was not
18 aware of that. And I will certainly check into that when I get
19 back because BellSouth stands by the fact that that definition
20 means what it says, that local traffic means any telephone call
21 that originates and terminates in the same LATA. So I was not
22 aware that that was an issue, and I will check into it when I
23 get back.
24 Q Wouldn't that be something that you would check into
25 as the interconnection expert responsible for implementing the

1 contract after it's executed?
2 A Well, typically when parties have a dispute, the
3 dispute is filed by the party who has that dispute; in this
4 case, that would be AT&T. And those disputes are handled by a
5 dispute group within BellSouth. And at the point that they
6 need resolution from someone who has responsibility for that,
7 it would come to me. This particular issue has not come to me,
8 so I will have to find out what particularly the issue is
9 around that dispute.
10 Q So would it be the normal case that if a company like
11 AT&T had filed an interconnection dispute over an issue like
12 this, that that would come to your attention?
13 A Typically, yes, and so I will have to find out what
14 it is that the issue is here. And again, I don't currently
15 today in my role have responsibility for interconnection as a
16 subject matter expert as of my last promotion, but I would
17 still be involved because of this proceeding and what's going
18 on. So, again, I have not received any escalated, which is
19 typically what happens at BellSouth, it gets escalated to a
20 manager to respond, and I have not received that. So I will
21 have to check when I get back because it was, again, the
22 first time I had heard of it when Mr. King testified that.
23 Q So even though you've got responsibility today for
24 Mississippi on a going-forward basis, at no time have you asked
25 anybody at BellSouth, why did we agree to a LATAwide definition

1 of local traffic in that agreement?
2 A Well, the earlier part of your statement I don't know
3 that I could agree with. I don't have responsibility for
4 implementing the Mississippi interconnection agreement today.
5 Is that what you said?
6 Yeah. As of my last promotion, I do not have SME
7 responsibility for interconnection negotiations. So as of the
8 time that we -- you know, in this proceeding I did, and that's
9 one of the reasons that I'm the witness, but today, I do not
10 have those responsibilities.
11 But to answer your question as to why BellSouth
12 agreed to that at that point in time it was agreed to and done,
13 the parties agreed to some things in Mississippi that they did
14 not agree to in the other states.
15 Q I thought you just said you didn't know why BellSouth
16 agreed to LATAwide in Mississippi?
17 A That's my testimony.
18 Q But then you just said that the parties agreed to
19 other things.
20 A Correct. If you look at the agreement, there are
21 differences between Mississippi and the other eight states, and
22 not just on this issue but on multiple issues.
23 Q Okay. Well, I'm confused. Just let me ask one
24 clarifying question. Do you today know why BellSouth agreed to
25 the LATAwide definition of local traffic in the Mississippi

1 interconnection agreement?
2 A I don't.
3 Q Okay. Now, when you arrived on the scene in April
4 and May of 2001 for the Florida interconnection negotiations,
5 did you ask anybody at BellSouth, Mr. Watts or Ms. Willis, to
6 give you a briefing on what the outstanding issues were?
7 A The open issues between BellSouth and AT&T? That was
8 actually pretty evident by the redline documents that the
9 parties were exchanging, and that's where we picked up and
10 started negotiating from.
11 Q Well, you didn't answer my question. Did you ask for
12 a briefing by anybody at BellSouth as to what the open issues
13 were?
14 A I had discussions with Michael Willis about -- in
15 coming in, and I'm sure that there were probably discussions
16 with Tim Watts. Actually, there were some meetings that Tim
17 was involved in when I started taking over where we were both
18 there.
19 Q What did Ms. Willis tell you was the current state of
20 negotiations in April or May of 2001 regarding the definition
21 of local traffic?
22 A I don't remember specifically us having -- I don't
23 remember our discussion around that. Obviously, in looking at
24 the redline documents in where we picked up, there were open
25 issues, and that would have been one that, again, as we've

1 discussed earlier, or saw earlier from the documents, AT&T
2 filed one set of language in their arbitration petition,
3 BellSouth filed a different set of language on the definition
4 of local traffic. And that remained that way for, I guess,
5 over a year, from actually the time that the arbitration filing
6 was made until May of 2001 when I proposed the new definition
7 that's very similar to what you see on the easle there.
8 And at that point in time, BellSouth had agreed to
9 that language again with minor modification that we've
10 discussed earlier about ruling regulatory body with some other
11 CLECs or ALECs, and I offered that to AT&T.
12 Q Okay. So just to summarize, when you talked to
13 Ms. Willis when you arrived on the scene, you had some
14 discussions with her, but you did not discuss the definition of
15 local traffic?
16 A We may have discussed that. I don't recall at that
17 time specifically what we said about that. I mean, again, the
18 parties picked up from a document that we were working from,
19 and that's where we started negotiating the issues.
20 Q Okay. So you're saying that you know that you looked
21 at redline versions of the agreement during that time frame?
22 A Yes. Well, we looked at the different versions that
23 were in effect, yes.
24 Q When you did that review of the redline versions when
25 you first arrived on the scene, what did you conclude from the

1 status of -- as to the status of the negotiations of the
2 parties at that time regarding local traffic?
3 A Again, I mean, if you're asking me to speculate, I
4 can give you what I think, but I don't recall specifically
5 having a discussion with her about where the definition of
6 local traffic was. There was a definition that was in the
7 working version the parties were working from; there was
8 obviously a different definition in what AT&T had filed with
9 the Commission in their arbitration petition. And then in the
10 May time frame, I offered the alternative language that is,
11 again, to what's in the Florida agreement today.
12 Q But you did review the redline versions of the
13 contract at that point in time; is that correct?
14 A Yes.
15 Q Based on that review that you did, what did you
16 conclude that you, Beth Shiroishi, needed to do in representing
17 BellSouth on a going-forward basis relative to the definition
18 of local traffic?
19 A I'm not sure I understand specifically what you're
20 asking me in the context of. Again, I offered to AT&T the
21 definition that you -- similar definition that you see in the
22 context of negotiations. I don't know that there was any other
23 action. I mean, the parties were negotiating. That was a
24 proposal made by BellSouth.
25 As this Commission is aware, BellSouth has different

1 definitions of local traffic in different agreements. AT&T
2 could have elected any of those. We could have worked from,
3 you know, where the last version showed that we were on the
4 definition of local traffic. And then also I offered the
5 alternative that is similar to what you see in the Florida
6 agreement.
7 Q Well, why did you offer AT&T a new definition of
8 local traffic on May the 22nd?
9 A The parties had been talking in the context of other
10 issues, and as you'll see in the redlines that were turned over
11 in the discovery, there were different provisions that we had
12 agreed to with different ALECs, and obviously this negotiations
13 had spanned quite a while.
14 The arbitration was filed in June of 2000. BellSouth
15 and AT&T had actually started negotiating months prior to that,
16 typically about four to six months. So, really, we had been at
17 this for at that point over a year and a half. Since that
18 time, BellSouth had agreed to language with certain carriers
19 that we then decided to offer to AT&T, or AT&T may have heard
20 about it and inquired about it. This was not uncommon as you
21 have in negotiations that take so long to update things that
22 you've offered to other carriers.
23 So in the context of that, we discussed the fact that
24 BellSouth did have this definition with other carriers, and
25 we'd be glad to offer it to AT&T and that's why I proposed it.

1 Q All right. You said that the parties were discussing
2 other issues. What other issues were they discussing that led
3 you to provide a new definition of local traffic?
4 A Again, I wouldn't say that it led me to provide a new
5 definition of local traffic. That was something that BellSouth
6 offered because we had done it with other carriers. There were
7 other -- obviously, every arbitration issue between the parties
8 was still unresolved at that point because even though we had
9 had the hearing, we did not have an order from the Florida
10 Commission or any other commission at that point in time.
11 Well, we may have had some actually, but we had not yet filed
12 the agreements.
13 So there were still basically any arbitration issue
14 was an unresolved issue at that point in time, and the parties
15 continued to negotiate where they could to reach mutual
16 agreement for several reasons. One being obviously if the
17 parties can reach mutual agreements, that's a good thing, and
18 the second being that in some cases, it would be more
19 beneficial to reach agreement throughout the eight-state region
20 and have one resolution per issue than have different
21 arbitrated solutions per state. So the parties continued to
22 negotiate many things. I was obviously only involved in the
23 local interconnection issues, but that's why the negotiations
24 continued.
25 Q Okay. Make sure I understand. Are you saying that

1 you had this definition of local traffic which you offered with
2 other ALECs?
3 A Yes.
4 Q Before you offered it to AT&T?
5 A Yes.
6 Q Who were some of those other ALECs?
7 A At that point in time, I believe that we had that
8 definition with Level 3. I would have to go back and look in
9 the different agreements to see specifically, but there were a
10 fair number of them. We actually provided a matrix in the
11 generic docket before this Commission in Phase III that
12 outlines those, and many of those were prior to May 22nd or May
13 of 2001 when we offered it to AT&T.
14 Q So Level 3 is the one that comes to mind that you
15 already had this new arrangement with?
16 A Yes, that is one that comes to mind.
17 Q Can you describe for the Commission the kind of
18 business that Level 3 is engaged in, long distance, local,
19 local only?
20 A Actually, it's my understanding that they do have a
21 long distance backbone network and they are also involved in
22 local, as well as data services.
23 Q Do you know their percentage of local business as
24 opposed to long distance business?
25 A I do not.

1 Q Do you know if they order switched access
2 arrangements from BellSouth?
3 A I believe that they do have some, yes.
4 Q Some. How many?
5 A I don't know numbers.
6 Q Could you compare the amount of switched access
7 arrangements that Level 3 has ordered from BellSouth compared
8 to what AT&T historically has ordered from BellSouth?
9 A No. Again, the context of my offering that was your
10 question as to who had that local traffic definition, and that
11 is one agreement that came to mind. Level 3 did negotiate
12 heavily on Attachment 3 local interconnection issues and
13 actually arbitrated, and we were able to resolve many of the
14 issues.
15 Q Now, the language that you had with Level 3 did not
16 have the language "as established by the state commission or
17 the FCC," did it?
18 A No. It had the "ruling regulatory body" phrase.
19 Q Singular, ruling regulatory body, indicating a single
20 body would make a decision or establish the switched access
21 arrangements; isn't that correct?
22 A Well, I don't know that I would agree totally with
23 that. The language reads, "through switched access
24 arrangements as established by the ruling regulatory body," so
25 the ruling regulatory body modifies the switched access

1 arrangement which would be dependent on the jurisdiction of
2 that switched access arrangement encompassing both the state
3 commission for an intrastate arrangement and the FCC for an
4 interstate arrangement.
5 Q Relative to this language again that you said was
6 Level 3 language, how does a ruling regulatory body or a state
7 commission or the FCC establish a switched access arrangement?
8 A That's a good question. Our tariffs state what the
9 switched access arrangements are. And if you look at what
10 we've looked at earlier today, the Florida tariff, it talks
11 about those switched access arrangements and how they are done
12 within the state of Florida for intrastate purposes.
13 We have a similar tariff for the FCC, or interstate
14 jurisdiction, that lays those out. BellSouth puts forth those
15 tariffs, but they are then approved by the state commission or
16 the FCC, and thus they are established by the FCC or state
17 commission.
18 Q So they're approved by the state commission or the
19 FCC so that equals establishment?
20 A Yes.
21 Q Curious, why didn't you use the term "approved"?
22 A I don't think it would have changed the meaning. The
23 word that was used was "established."
24 Q And this is language that BellSouth finally proposed
25 to Level 3. This was not Level 3's language; isn't that

1 correct?
2 A I'm not actually sure of the origin of the language
3 in the beginning. Level 3 is probably not the first carrier
4 that we had it with. Again, this language is not a unique set
5 of language. We had this type of language, again with the
6 exception of ruling regulatory body, in multiple
7 interconnection agreements in Florida and in BellSouth's other
8 region -- other states. So this language is not something that
9 is only in a few contracts.
10 We have this in multiple contracts with multiple
11 carriers. And I don't actually know the origin of the
12 first time that we agreed to the language with a carrier. It's
13 been something that we've offered up for quite a while at that
14 point in time, and so it could be that that was language that
15 was crafted mutually between BellSouth and another ALEC before
16 my involvement. I don't know the answer to the origin of that.
17 Q Let's talk about the beginning of that sentence where
18 it says, "The parties agree to apply a LATAwide local concept
19 to this Attachment 3, meaning that traffic that has
20 traditionally been treated as intraLATA toll traffic will now
21 be treated as local for intercarrier compensation purposes."
22 Was that in the Level 3 agreement?
23 A No, not specifically. Again, the Level 3 agreement,
24 I think, starts out by saying, "Local traffic is defined as,"
25 or something to that effect. But the application and the

1 meaning is exactly the same.
2 Q So was the language, "The parties agree to apply a
3 LATAwide local concept to this Attachment 3," was that new to
4 BellSouth and was AT&T the first company to which you provided
5 that language?
6 A I would have to check on that. It's not something
7 that's in every one of our other agreements, obviously. But I
8 don't know that it's the first -- that AT&T was the only or
9 first one. I would have to check.
10 But again, what that does, if you look at this
11 definition, you have to kind of think about it in a flowchart
12 manner. It really sets out a decision tree. First, it says,
13 "anything that originates and terminates in the LATA," so
14 that's kind of your first decision point for what's going to be
15 local. Does it originate and terminate in the LATA? And if
16 your answer to that is, yes, then you kind of go to the second
17 decision point which is, does it traverse or is it originated
18 or terminated through switched access arrangements? And the
19 answer to that gets you to a, yes, it's a local, or no, it's
20 not.
21 The language that's put forth here whether you say
22 local traffic is defined as any call that originates or
23 terminates or whether you say we've agreed to a concept, that
24 language doesn't change what the meaning of that is, and that's
25 basically you have two criteria. Number one, it has to

1 originate and terminate in the LATA, and number two, it has to
2 be originated or terminated through something other than a
3 switched access arrangement.
4 And we heard a lot of testimony earlier about that
5 and can talk about switched access arrangements versus what is
6 called local toll arrangements in the industry. But basically
7 that's what the agreement does, just sets out a flowchart for
8 you, two criteria for what's local. And the Level 3 agreement
9 that you asked me about earlier is the same way.
10 Q Now, did you write this language, "The parties agree
11 to apply a LATAwide local concept"? Is that your language?
12 A I believe so, yes.
13 Q And is AT&T the first company to which you offered
14 that?
15 A Again, I would have to go back and look. I'm not
16 100 percent positive without checking.
17 Q If you wrote the language, why did you even have to
18 have the language "meaning that traffic that has traditionally
19 been treated as intraLATA toll will now be treated as local for
20 intercarrier compensation"? Why did you need that language
21 based on how you've explained the contract provision works?
22 A I don't know that you do need it that way. I mean,
23 you could also say, "The parties have agreed that anything that
24 originates and terminates in the LATA, except for calls that
25 are originated or terminated through switched access

1 arrangements as established by the FCC will be local." It all
2 has the same meaning.
3 Q Well, it would be helpful if you were negotiating
4 with a company and you wanted to give the other company some
5 comfort that they were getting something new and additional in
6 the definition of local traffic; isn't that correct?
7 A I don't understand what you're asking me.
8 Q Well, that language would be helpful if you were
9 negotiating with AT&T and AT&T is saying, I'd like to have
10 LATAwide local, and so you say to them, well, what we'll do is
11 we'll agree to a LATAwide local concept, meaning that traffic
12 that's traditionally been treated as intraLATA toll will now be
13 treated as local. That would help the negotiations, would it
14 not?
15 A Well, no. I mean, you've got a clear exclusion
16 there. So I'm not sure what you mean by "help the
17 negotiations." The context of this whole negotiations which I
18 think is important to understand because we've heard and you
19 just used the word "want," or a company who wanted LATAwide
20 local, and I think Mr. King said he wanted LATAwide local,
21 again, BellSouth and AT&T had negotiated from about
22 January 2000, roughly, I'm not sure the start date of that, and
23 they filed -- AT&T filed for arbitration in June of 2000.
24 We've already established earlier that the parties did not have
25 the same language in their petitions for arbitration, and

1 BellSouth actually stated that we didn't agree with the
2 characterization of many of AT&T's issues.
3 For over a year -- I mean, we actually had the
4 hearing on that issue in, I believe, February 2001. So for
5 that period of time, there was no negotiations going on about
6 the local traffic definition. It didn't change. AT&T didn't
7 file anything to say we disagree, we think we have LATAwide
8 local, or we need to add this as an arbitration issue because
9 we don't agree.
10 It wasn't until after the arbitration was filed,
11 after the arbitration hearing in May of 2001 when BellSouth
12 offered the language that you see here that we actually started
13 negotiating that again. So, again, we heard earlier a lot of
14 testimony about AT&T wanting a LATAwide local definition or
15 wanting a definition that made everything in the LATA local,
16 but I'm having a hard time understanding that when AT&T didn't
17 arbitrate that issue, and the hearing had already been held.
18 And obviously, I would hope AT&T had read BellSouth's position
19 and saw that we had filed that we didn't agree on that
20 position, that it was everything in the LATA.
21 And it wasn't until May of 2001 when BellSouth
22 proposed the new definition with a clear exclusion. So I guess
23 the characterization of helping the negotiations along or in
24 some context trying to sell that, I mean, BellSouth offered the
25 definition that it offered and it has that clear exclusion.

1 COMMISSIONER DEASON: Let me ask a question at this
2 point. I'm still not sure that I have, in my own mind, an
3 adequate explanation to the question as to why then did you add
4 the phrase "meaning that traffic that has traditionally been
5 treated as intraLATA toll traffic will now be treated as local
6 for intercarrier compensation for purposes."
7 If you're indicating that that really is not
8 necessary to be in the agreement to be consistent with your
9 interpretation, why was that language included?
10 THE WITNESS: Well, the statement is accurate, and
11 let me give you an example of how that would work. If you had
12 a call within the LATA, within let's just pick the Jacksonville
13 LATA, that originated and terminated in that Jacksonville LATA
14 and would traditionally be treated as intraLATA toll, and if
15 that call traversed or went over what is called local toll
16 trunk groups, which again we've kind of gone back and forth on
17 talking about switched access arrangements and trunk groups and
18 facilities, and we can get into that if we need to technically
19 to understand the issue, if that call that was traditionally
20 intraLATA toll was routed over that local toll trunk group,
21 then under this definition it would be local. So that's --
22 COMMISSIONER DEASON: Let me interrupt. Okay. Help
23 me here. Realistically, what percentage of traffic does that
24 constitute? Is that a small percentage, or is that something
25 that's very significant?

1 THE WITNESS: That would depend on how a carrier had
2 routed -- a carrier being the other carrier, not BellSouth --
3 its traffic and configured its network. And I would say that
4 varies --
5 COMMISSIONER DEASON: Well, for AT&T, do you have
6 knowledge of that?
7 THE WITNESS: I don't have specific knowledge. I can
8 tell you that we've negotiated with other carriers. And in
9 fact, I don't think they'd mind me saying it. MCI is one who's
10 approached us to say, we're actually interested in separating
11 out our network and in having an access type or long distance
12 versus local toll. And so by carrier, that would depend on
13 their business plan. Their explanation to me being that's
14 easier for them to manage from a financial standpoint as well
15 as an asset standpoint. But I couldn't tell you specifically
16 for AT&T.
17 So those type of calls that were "traditionally
18 intraLATA toll traffic" would now become local under this
19 definition. And the reason that that's somewhat, I guess, a
20 benefit or an easier thing, as we got into in the generic
21 docket in Phase III in the generic docket in this state, we got
22 into what do you do when parties have different local calling
23 areas? Obviously every ALEC isn't going to mirror BellSouth's
24 local calling area, or the ILEC's local calling area, so how do
25 you then determine what's local?

1 This definition gives you some structure around how
2 to do that and somewhat simplifies that by saying, okay, we
3 don't have to worry about your local calling area versus my
4 local calling area, or maybe they don't -- maybe a carrier
5 offers a bundled package where it's hard to determine whether
6 it's "billed as local" or "billed as access." It's just a
7 one-rate plan that we're seeing so much of now.
8 This definition moves away from those end user type
9 concepts and moves to a here's what we're going to say between
10 the parties is local. And so, again, traffic that had
11 traditionally been treated as intraLATA toll traffic would now
12 be treated as local, except BellSouth is not willing to say
13 that anything pursuant to our switched access tariffs gets
14 treated as local because, in our opinion, that's still switched
15 access and governed by our tariffs. So we put in the exclusion
16 for calls that are originated or terminated through switched
17 access arrangements. So this would be limited, again as we
18 talked about earlier, to originating and terminating in the
19 LATA and then also to how that call was configured, was it
20 local interconnection or was it switched access.
21 BY MS. CECIL:
22 Q Ms. Shiroishi, you mentioned just a couple of minutes
23 ago this concept of local toll trunks; is that correct?
24 A Yes.
25 Q How is that regulated? What kind of animal is it?

1 A Local toll trunks are -- we talked earlier about
2 interconnection and local interconnection type trunk groups.
3 And we've talked earlier about switched access arrangements,
4 and is that synonymous with facilities, and how does that work.
5 My answer to that question would be switched access
6 arrangements are basically grouped what I would call trunks and
7 facilities or trunk groups. They are the facilities, but
8 facilities is typically technically kind of used to describe
9 the pipe or the transport or in a very nontechnical use of the
10 word like the road versus the trunks which are the lanes of the
11 road or channels that make those switches talk to each other.
12 So switched access arrangements encompasses both the trunks and
13 the facilities to make those arrangements one.
14 And in the industry there are different types of
15 services and different types of switched access arrangements or
16 trunk groups that you can purchase. Switched access
17 arrangements are set out in the switched access tariff, and
18 there's -- typically everybody is familiar with Feature Group
19 A, B, C, D, 800, 900, those types of switched access
20 arrangements, and then there are some others that are a little
21 less common.
22 Local toll trunk groups are similar in concept except
23 they transport local and intraLATA toll type traffic. And
24 those are pursuant to the interconnection agreement between the
25 parties. And actually, the provisions of those are in my

1 testimony in one of the exhibits to my direct testimony. So
2 they're regulated pursuant to the interconnection agreements,
3 but also there are rules in place by the FCC and the state
4 commissions as to what our minimum -- you know, the
5 requirements are about doing local interconnection.
6 Q Okay. Again, I want to get some clarification. What
7 kind of traffic goes over a local toll trunk in terms of
8 compensation? Is it local reciprocal compensation, or is it
9 switched access traffic?
10 A That's going to depend on -- because these are again
11 intraLATA local toll, local/intraLATA toll, and that's
12 typically just abbreviated to be called local toll, because
13 those are governed by the interconnection agreement, you have
14 to look at the interconnection agreement between the parties to
15 determine how those are compensated.
16 Again, BellSouth has some interconnection agreements
17 that state, and this is just for example purpose, that local
18 traffic will be determined by anything that originates and
19 terminates in the ILEC's local calling area. So for that
20 purpose, you would look at the interconnection agreement to
21 determine how the parties were going to bill. Obviously, in
22 this case, the parties agreed to the language that we see on
23 the easle. So you would look at that definition to determine
24 how it's going to be billed.
25 Q Prior to 1995, how did parties order intraLATA trunks

1 or trunks that would carry intraLATA traffic?
2 A Pursuant to the access tariffs.
3 Q It was pursuant to access tariffs. So you're saying
4 that that's now changed by virtue of what you're willing to do
5 in an interconnection agreement?
6 A Well, we still have trunks that are pursuant -- and
7 again, let me clarify, prior to your question when you said
8 "intraLATA," I was assuming you meant intraLATA access. Was
9 that the case?
10 Q IntraLATA toll.
11 A IntraLATA toll, yes. And so that was how the parties
12 did that. With the advent or the come about of local
13 interconnection, the parties then had to interconnect for local
14 purposes. And so we had the introduction of interconnection
15 agreements between the parties to govern that.
16 Q So you've taken something that had been a switched
17 access arrangement in the 1995 time frame and you've converted
18 it into a nonswitched access arrangement by virtue of language
19 in an interconnection agreement. Is that what you're saying?
20 A Not necessarily. Again, if you look at some of the
21 interconnection agreements that BellSouth has, it states that
22 the call will be determined as local if it's within the ILEC's
23 local calling area. So again, you didn't have that prior to
24 '95. So now you have that compensation in that setup within
25 the LATA that's local, that's going to be local, and anything

1 left is still going to be intraLATA toll pursuant to your
2 tariff.
3 Again, because of the difficulty in the fact that
4 different carriers can have different local calling areas --
5 and this Commission wrestled with that in the generic docket
6 and how to handle that -- equitably you might have a call that
7 technically when it goes from one end user of, let's say,
8 BellSouth to an end user of an ALEC, might be tolled to that
9 end user who originated it, you could turn around, have the
10 same call in reverse that could, from an end user perspective,
11 be local because of whatever plan they've purchased from their
12 carrier. Because of that difficulty in compensation, BellSouth
13 and ALECs have agreed to different schemes.
14 One of the things we've agreed to, we talked earlier
15 about the ILEC's local calling area governing, is also that the
16 originating party's local calling area or the call originates
17 and terminates in the LATA and is billed by the party as the
18 originating party would govern. That's a second "flavor" of
19 how you can define local traffic in an interconnection
20 agreement. And then this would be, not that it's limited to
21 three favors, but just another flavor or third flavor of how
22 the parties could do that. So you still have your tariffs that
23 govern in how that works, but then for the local piece of it,
24 that's where the interconnection agreement comes in and what
25 will be considered local.

1 Q Okay. Just a couple more clarifying questions, then
2 we're going to move to another topic. When you use the term
3 "local toll trunks," is that the same as local interconnection
4 under Attachment 3 of the interconnection agreement between
5 AT&T and BellSouth?
6 A Yes. And there are also some other type trunk groups
7 that are described in Attachment 3 such as transit and things
8 like that.
9 Q So if AT&T orders a local toll or local
10 interconnection trunk from BellSouth, does that guarantee that
11 all the traffic that goes over that trunk or trunk group is
12 going to be compensated as local reciprocal compensation
13 traffic?
14 A I'm glad you asked me that question because that, I
15 think, was a source of confusion earlier. How the parties --
16 MS. CECIL: Commissioner, could I get a "yes" or
17 "no"? And then I'll be glad to hear her explanation.
18 COMMISSIONER DEASON: Yes. If you could answer "yes"
19 or "no," it would be helpful.
20 THE WITNESS: Okay. The answer is that depends on
21 what the parties' interconnection agreement says. And for the
22 purposes of BellSouth and AT&T, we have put forth a definition
23 of local traffic for how that will be handled. And in the
24 BellSouth/AT&T agreement, the answer would be, yes, anything
25 that originates and terminates in the LATA and originates and

terminates over a "local toll trunk group" would be considered local. That doesn't necessarily -- that answer is not necessarily the same for another definition of local traffic, but that's part of the crux of this whole issue, is that the Florida agreement and the definition of local traffic is what would determine the compensation for that traffic that flows over that switched access arrangement.

BY MS. CECIL:

Q Did you hear Mr. King testify earlier today that even for a local interconnection trunk, that there is still an allocation done by the parties as to how much is local traffic that's handled over that trunk as opposed to switched access traffic that's handled over that trunk?

A I did hear him say that.

Q Do you disagree with what he testified to this morning?

A I think perhaps there's a better way to explain it or to clarify. We do use factors to bill, and we use factors that we heard about the language that talked about it. However, you determine those factors based on what the contract says for local. Now, interstate -- the percent that's interstate, that's pretty clear-cut. Everybody knows right where the state boundaries are. But within the state and what's going to be local and what's not, you go to the parties' interconnection agreement to determine what's local and what's not.

1 And in the provisions that Mr. King read from
2 earlier, and I won't read verbatim but I'll just reference
3 them, we talk about the factors. And on down in each of those
4 factors, there's a reference to a guide that it says,
5 detailed -- I'm paraphrasing, detailed requirements associated
6 with the reporting of whichever factor we're referencing are
7 set forth in, and it gives the reference to the guide. That
8 guide clearly talks about, for the percent local usage, that
9 you go back to your interconnection agreement to determine
10 what's local, and then, yes, you do develop a factor based on
11 that. And that's -- but I think that was a bit confusing
12 earlier as to how that all works.
13 The use of a factor doesn't change what's local. It
14 actually is in reverse logical sense. You first decide
15 conceptually what is local, and we do the decision points we
16 talked about earlier, and then you apply your factor based
17 on -- or you develop, I'm sorry, not apply, you develop your
18 factor based on that.
19 Q Well, now, you're an expert in interconnection, and
20 you negotiated the AT&T/BellSouth agreement. I'm going to ask
21 you a very simple question. If AT&T orders local
22 interconnection trunks under Attachment 3 of the agreement,
23 should AT&T be paying any switched access fee or rate to
24 BellSouth?
25 A For those local -- for the minutes that traverse

1 those local interconnection facilities?
2 Q Yes.
3 A And it originates and terminates in the LATA?
4 Q However you think the agreement handles that. That's
5 why I'm asking you the question.
6 A If it is truly an intraLATA -- a local/intraLATA
7 trunk group, which means everything would originate and
8 terminate in the LATA, then, no, there should be no switched
9 access that applies to those particular minutes.
10 Now, again, these factors are done on a statewide
11 basis. So you take all the minutes in the state and you look
12 at how it's done, and that's how the application applies. But
13 if you drive back to the minutes over that particular trunk
14 group, then those should all be counted as local.
15 Q So any language in that contract that deals with a
16 factor relative to a local interconnection trunk for AT&T, as
17 you've described it, is superfluous and has no value in the
18 contract.
19 A No. It's not superfluous because, again, these
20 factors are developed on a statewide basis, and you use that
21 language to develop -- you use the definition of local traffic
22 to develop your factor, and that factor is then applied on a
23 statewide basis. So mathematically you get to the end result,
24 but it's not superfluous. It still has meaning. I think the
25 confusion is coming from the fact that the use of a factor

1 doesn't change what's local. It doesn't in any way change
2 what's local. It implements what's local.
3 So, first, you look at, what does the agreement say
4 is local? Then you do your traffic study, and then you create
5 your factor based on the traffic study that you see and whether
6 each of those minutes falls as local or nonlocal under your
7 definition in your agreement.
8 Q But that wouldn't be necessary if everything on that
9 local interconnection trunk is supposed to be local. You don't
10 need a factor, do you? You bill it all as local reciprocal
11 comp, do you not?
12 A I think you're assuming that minutes are billed on a
13 minute-by-minute actuality and they're not. Within the
14 industry of telecom, the ordering and billing form, OBF,
15 determines that minutes of use would be billed in an aggregate;
16 that basically on a statewide basis, you would take all minutes
17 and you would say, here's a bucket, to be very untechnical, of
18 a hundred -- I'm going to use easy math, of a hundred minutes.
19 And then, first, you're going to give a factor to say of those
20 hundred minutes for the state of Florida, how many were
21 interstate? And you're going to take those out. So let's say
22 that factor was 20 percent. You're going to take 20 percent of
23 100 out. So you're left with 80 minutes that are intrastate,
24 20 minutes that are interstate. Then you have to develop a
25 factor for the state, not by trunk group. And I think that

1 might be where the confusion is coming up.
2 But you're going to take those 80 minutes and you're
3 going to look at each of them and do a traffic study and say,
4 this one qualifies as local under the contract, this one
5 doesn't, this one does, this one doesn't. You do that
6 analysis, and then you come up with another factor for what
7 percent is local. And under that analysis --
8 COMMISSIONER DEASON: I'm sorry. I'm going to have
9 to interrupt.
10 THE WITNESS: Okay.
11 COMMISSIONER DEASON: Under that analysis to
12 determine once you get the 80 minutes and how you're going to
13 allocate those and come up with your percentage factor,
14 according to your definition, don't you have to know up front
15 how many of those minutes went through a switched access
16 arrangement?
17 THE WITNESS: That's exactly what you do in that
18 analysis. You look at the minute and you say, did this one,
19 number one, originate and terminate in the LATA, and if it did,
20 did it go over a switched access arrangement or not, and then
21 you make a determination on that minute. And obviously, I'm
22 oversimplifying. This is done by computers and analyses and
23 studies, not an actual person. But then you make a
24 determination of that minute then falls in the local or
25 intraLATA, and you determine from that study a factor. And

1 then that factor is applied, and Mr. King said earlier,
2 monthly. I believe that the contract actually says quarterly
3 we do that, provide that to each other. You do that and that's
4 how you then bill.
5 But in looking at after you've taken out your
6 interstate, the remaining minutes, how you develop your factor
7 to implement is you look at your definition of local and
8 determine if that minute qualifies as local or not.
9 And to your point, Commissioner Deason, the way you
10 determine that is by looking and seeing, number one, does it
11 originate and terminate in the LATA, and then number two, is it
12 originated or terminated over switched access arrangements.
13 And depending on the answers to those questions, you either
14 have a, yes, it's local, or no, it's not. And you develop your
15 PLU from there.
16 Again, I've gone into laborious detail and made it
17 sound like a very manual effort. It's really more of a traffic
18 study that's done using a computer software typically, but
19 that's the concept behind it.
20 COMMISSIONER DAVIDSON: Chairman, can I follow up to
21 your question?
22 COMMISSIONER DEASON: Certainly.
23 COMMISSIONER DAVIDSON: Hypothetically, once all the
24 interstate minutes are taken out, if AT&T demonstrated, and for
25 purposes of this hypothetical, that every single minute

1 in-state intra -- was intraLATA and traversed a local trunk as
2 opposed to a switched access facility, every minute, there was
3 not one minute that did not traverse off the local trunk, would
4 there be only local compensation, reciprocal comp applied?
5 THE WITNESS: Let me make sure I understood the first
6 part of your question. You said all of them were intraLATA?
7 COMMISSIONER DAVIDSON: Everything is what we're
8 talking about. Every single minute intraLATA, every minute,
9 and over a local trunk.
10 THE WITNESS: Yes.
11 COMMISSIONER DAVIDSON: That's easy. Those two
12 scenarios. Everything intraLATA, everything over a local
13 trunk, would there be anything other than local compensation?
14 I think that's what we're trying to get at. Anything other.
15 THE WITNESS: Not under this definition.
16 COMMISSIONER DAVIDSON: Under this definition and in
17 this agreement --
18 THE WITNESS: No.
19 COMMISSIONER DAVIDSON: -- for AT&T.
20 THE WITNESS: No, there would not be.
21 COMMISSIONER DAVIDSON: Okay. Thanks.
22 BY MS. CECIL:
23 Q Now, Ms. Shiroishi, just following up on Commissioner
24 Davidson's question, with respect to anything that goes over a
25 switched access arrangement, that will be switched access

1 traffic; is that correct?
2 A Correct.
3 Q All right. So you, again, take the position that the
4 trunking facility is what governs whether or not the traffic is
5 local versus whether the traffic is switched access?
6 A Well, I think I would say the language says that. I
7 mean, the language sets forth what the parties agreed would be
8 local traffic. And when you read it, it says, and I'm
9 paraphrasing, but anything that, number one, has to be
10 originating and terminating in the LATA and an exclusion for
11 anything that originates or terminates over switched access
12 arrangements. So my answer is, yes, except for the fact that I
13 wouldn't say that's BellSouth's position, I'd say that's what
14 the language says.
15 Q Okay. Now, we've just engaged in probably about a
16 45-minute discussion about this one particular provision and
17 how it operates under the agreement. Did you have these same
18 sort of detailed discussions with Mr. Peacock or AT&T at the
19 time that you were negotiating this language?
20 A Not to this extent, no.
21 COMMISSIONER DAVIDSON: Could I jump in with another
22 question here related to this before we move on?
23 Can you let me know, did the October 2001 agreement
24 result in any of AT&T's traffic being treated as switched
25 access traffic or billed at the higher switched access rates

1 that prior to the October 2001 agreement had not been treated
2 as such?
3 THE WITNESS: Because of the dispute between the
4 parties, we've actually kind of frozen in time where we stand.
5 So that's a difficult question to answer. I have not looked at
6 the specific traffic studies to be able to give you an answer
7 on that. AT&T as well as TCG as a party to this agreement --
8 I'm sorry, to this complaint have very different networks. And
9 I believe TCG is predominately these local interconnection type
10 trunks that we've talked about. So I would need to look at
11 both of those to give you an answer, and I don't have an answer
12 specifically to that.
13 COMMISSIONER DAVIDSON: Thank you.
14 BY MS. CECIL:
15 Q Ms. Shiroishi, do you remember that I asked you that
16 question in the North Carolina hearing?
17 A I don't remember specifically, but if you'd like to
18 point me to that part of the transcript, we could --
19 Q You don't remember answering that question in North
20 Carolina?
21 A Not specifically. I remember us talking about, did I
22 have an understanding of the percent of traffic that was local
23 versus switched access, but not specifically what Commissioner
24 Davidson asked.
25 Q When I took your deposition in the North Carolina

1 proceeding, do you remember that I asked you the same question?
2 Were you aware that AT&T had been sending traffic to BellSouth
3 over switched access arrangements under the old agreement that
4 BellSouth was compensating as local traffic? Do you remember
5 that?
6 A Yes.
7 Q And what was your answer in that North Carolina
8 deposition to that question?
9 A Well, I think that was a slightly different question
10 because I think Commissioner Davidson was asking overall how
11 the traffic would be. Ask me again your question.
12 Q In the North Carolina deposition, I asked you if you
13 were aware that prior to this agreement being in effect, under
14 the old interconnection agreement, that AT&T had sent traffic
15 to BellSouth which we had transported and terminated over
16 switched access arrangements, and it had been charged at local
17 reciprocal compensation rates?
18 A Can we point to that particular point? Because I
19 remember that discussion, but I don't remember the question
20 being exactly that way.
21 COMMISSIONER DAVIDSON: My question was not exactly
22 that way, but that was the gist of my question. I really
23 wanted to know what the practice was of the parties with regard
24 to whatever the set of traffic is and how that set of traffic
25 was treated prior to this agreement and subsequent to this

1 agreement.
2 THE WITNESS: Okay. Can I just talk conceptually
3 without percentages? Would that help?
4 COMMISSIONER DAVIDSON: If you don't have
5 percentages, you don't have percentages, and talking
6 conceptually is fine. That may help myself and the others get
7 through it, but I would also at a certain point like to hear
8 the answer to counsel's question.
9 THE WITNESS: Okay. Under the first interconnection
10 agreement we've talked a little bit about this. The parties'
11 definition was that anything that originated and terminated in
12 the LATA and was billed by the originating party would be what
13 would be considered local. So there was absolutely no
14 determination or impact on the routing. So under that
15 interconnection agreement, the parties could consolidate or
16 combine terminating traffic on the same type trunk groups, and
17 then the way that you would determine which minutes were
18 "local" would be that definition that I just discussed, that it
19 was originated and terminated in the LATA and billed as local.
20 So under that interconnection agreement, that's how the parties
21 did it.
22 When we negotiated this interconnection agreement,
23 obviously that was an option that was available to AT&T.
24 That's actually what BellSouth filed in its petition as where
25 the parties were on this issue. Obviously, AT&T filed

1 something different, and that is a definition that we have with
2 other carriers in this state and other states and something
3 that's available to AT&T. What the parties did in negotiating
4 this definition was change that. We determined or we agreed in
5 this definition to handle -- and I won't go back into it
6 because you've all heard it and know what we'd agreed to.
7 And in my direct testimony, we also talked about -- I
8 talked in the direct testimony, and I think it bodes to bring
9 up here, the interconnection trunking. And if you look at the
10 exhibit to my direct testimony, there's language that talks
11 about trunking and routing, and that's the section,
12 interconnection trunking and routing. And it says, and I'm
13 reading here from Section 3.1, "The parties will convert all
14 existing interconnection arrangements and trunks to the
15 interconnection arrangements described in this attachment in
16 accordance with the following." And then it has language that
17 says, "Within 45 days of either parties written request, we'll
18 develop an operations plan," and it goes on to talk about how
19 that will be done.
20 A few pages later, it describes the local
21 interconnection trunk groups or arrangements that Ms. Cecil
22 asked me about earlier. And there's several "architectures"
23 that you can choose from. All of those are local and intraLATA
24 toll offerings with local and intraLATA toll -- I'm sorry,
25 local and intraLATA traffic -- forget about toll because at

1 this point it's just traffic -- on one trunk group. And it
2 doesn't address the switched access arrangements because that's
3 pursuant to the tariff.
4 So when we moved to this new second interconnection
5 agreement, there was an agreement on the parties to change how
6 we were determining what was local. Again, in the
7 first agreement, we would look at what originated and
8 terminated in the LATA and what was billed as local. In the
9 second agreement, we would look at what originated and
10 terminated in the LATA and then exclude out anything over
11 switched access trunk groups. So there was a clear change from
12 how the parties were going to determine what was local.
13 BY MS. CECIL:
14 Q Ms. Shiroishi, if you have before you there your
15 North Carolina deposition, let's go over to Page 144, and let's
16 look at Line 11. I asked you the question there: Do you know
17 whether AT&T did that under the first interconnection agreement
18 and billed -- and BellSouth billed it as local?
19 A Yes.
20 Q You may need to read --
21 A Yeah, I want to find out what "that" was.
22 Q Yeah. Why don't you take a look at Page 143 and 144?
23 A I think -- tell me if I'm reading this correctly --
24 your question was whether AT&T was sending traffic to BellSouth
25 over switched access trunk groups under the first

1 interconnection agreement and BellSouth billing it as local; is
2 that correct?
3 Q That's correct.
4 A And my answer was: I don't have any knowledge of the
5 billing under the first interconnection agreement, again,
6 specific to numbers and percentages, but conceptually what we
7 just talked about gets to the definition of what would have
8 happened.
9 Q And then in the North Carolina proceeding when we
10 were actually at the hearing, I believe I asked you the
11 question again. Do you not recall that?
12 A Again, I recall our discussion. I don't recall the
13 specific questions.
14 Q And I believe in North Carolina you said, yes, you
15 had done some subsequent research and had now learned that, in
16 fact, under the first interconnection agreement there had been
17 traffic AT&T had sent over switched access, and it had been
18 billed as local?
19 A Again, pursuant to the first interconnection
20 agreement definition of local traffic.
21 Q Well, we've at least put that one to rest. Let's
22 talk about just sort of the process before we move into another
23 more technical issue about the language because I want to talk
24 about the definition of switched access traffic as well. But
25 just in terms of how the parties operated, you've referred to

1 redlines several times today, other witnesses have referred to
2 redlines. What is this concept of redlining, and how did it
3 operate, how do the parties operate with redlining?
4 A Redlining is a term that's probably come about
5 because of the Microsoft Office Suite of software. It's a
6 function in one of their products called Word that basically
7 you can turn on a function called track changes, and it shows
8 you the changes that you're making. Those show up in redline
9 format. The first color is red.
10 As discussed earlier, typically additions are shown
11 with an underline as well, and anything you delete shows up
12 still there but as stricken. So redlining is just a term to
13 use -- used to reflect the fact that parties are making changes
14 to documents, but those changes show up as changes, they don't
15 just disappear or appear.
16 Q Now, when you used the term "documents," there
17 weren't really documents. Wasn't there one base contract, set
18 of contract language that the parties were sending back to each
19 other, but there was one base contract?
20 A Right. The agreement is broken up into different
21 attachments. So we would typically handle those on an
22 attachment-by-attachment basis. And again, local
23 interconnection is all encompassed in AT&T's agreement -- or
24 not all but most of it. There are, I think, some references
25 and definitions elsewhere, but the majority, substantive

1 majority is in Attachment 3. So that would be the base
2 document. Now, as you redline and make changes, we would save
3 those older versions. So, obviously, in the discovery, you see
4 multiple versions of the same document with those changes
5 reflected.
6 Q And the base document, the base terms and conditions
7 that were started with throughout the negotiation, those were
8 BellSouth standard terms and conditions, were they not?
9 A I believe so back in the -- again, prior to the
10 arbitration, January 2000 time frame, yes.
11 Q So it was your originally drafted language, and you
12 also had control over the document, did you not?
13 A I believe, yeah, that BellSouth at that point had
14 kind of contained or retained document control over that. When
15 I became involved in Attachment 3, there were instances where I
16 would send it to AT&T, and they would actually make their
17 changes, again, showing up in redline format and send back. So
18 we started more of an exchange at that point, but I think prior
19 to that the document was mainly controlled by BellSouth.
20 Q Now, we've talked about in past proceedings,
21 particularly in North Carolina, that your standard of operation
22 was to not make many, if any, handwritten notes; is that
23 correct?
24 A Well, my personal way that I negotiate and handle
25 that is I do make the notes while we're in the meeting and

1 discussions. I then take the notes and the changes that are
2 being proposed and put that into the redline document. Some
3 people might do it sitting there with their computer or laptop.
4 I'm not quite that quick on my computer. So typically I make
5 handwritten notes and make my changes. Then I take those
6 handwritten notes and changes, put them in a documented
7 electronic document and send to AT&T for review. And at that
8 point, no, I don't keep all of the handwritten notes because
9 the changes are in that document that are sent over.
10 Q So do you discard or destroy the notes
11 contemporaneous with your changes made in the redline
12 agreement?
13 A It would depend. I mean, typically if there was
14 nothing left outstanding that I still needed to research or do,
15 then, yeah, there would be no reason for me to keep that after
16 I had transmitted it to AT&T. If perhaps there was a list of
17 action items I needed to do that wasn't language per se but
18 just checking on something, I would either keep that in a
19 separate note or I might keep that document until I had done
20 that to ensure that I completed all my action items.
21 Q Well, isn't it a fact that in this proceeding in
22 discovery that we've asked for, you have not provided any
23 handwritten notes that you created in the negotiations with
24 AT&T?
25 A I believe that we -- again, I turned over the e-mails

1 that have the typed version of what was outstanding or what
2 needed to be done. My calendar was turned over, which was
3 handwritten at that point, but no particular, you know, pages
4 of notes because those were embodied in the redlines or e-mails
5 transmitting the redlines.
6 Q And the e-mails that we talked about in your
7 deposition here in Florida were primarily transmittal, here,
8 Bill, here's the next version of the redline, those kinds of
9 things; isn't that correct?
10 A Right. I mean, there weren't a lot of notes other
11 than discussing contract language.
12 Q So we really don't have anything that we can go to
13 other than the redline agreements to sort of see what you were
14 proposing back and forth with AT&T; isn't that correct?
15 A Not other than what we provided you.
16 Q Okay. Now, Ms. Shiroishi, you say that you currently
17 supervise all of the BellSouth contract negotiators for all
18 ALECs that BellSouth deals with; is that not correct?
19 A That is correct.
20 Q And there are 11 of those contract negotiators;
21 right?
22 A Currently, yes.
23 Q And did you begin those supervisory responsibilities
24 as a result of your most recent promotion in this, I guess,
25 January or February?

A That's not when I started that responsibility. I actually took that on toward the end of last year, I think in the September, October time frame, in an acting title.

Q So if you had one of those contract negotiators who came to you today and said, boss, I'm negotiating a definition of local traffic and what an exception to the definition of local traffic might be, and gosh, I'm thinking about just sending over redlined versions of the contract and you think that's okay, what would you tell that contract negotiator?

A I'm not sure I understand the question per se. I would probably asked them for clarification on what they were asking me. I mean, in the course of negotiating, we do keep notes of action items and things that need to be -- in that particular instance, that negotiator would actually be working with a subject matter expert on local interconnection, and that was the role that I had when this was negotiated. And so they would be dealing with that subject matter expert who now is a different person at BellSouth to accomplish that. That subject matter expert would give them input on to whether they should or should not agree to this change and those types of things. I'm not sure exactly what you're asking.

Q Okay. Well, let's look at it from a different perspective. Does BellSouth have any guidelines or document retention provisions that deal with notes in the interconnection negotiation context?

1 A My answer to that would have to be we have kind of
2 two sets of guidelines. Currently, we're under some litigation
3 for large type lawsuits, and so our document retention policy
4 is to keep everything. So at this point in time, because of
5 those lawsuits, or I should say pending litigation, we have a
6 document retention policy to keep all notes, all redlines, all
7 documents, all e-mails, everything that goes on. That has only
8 been -- actually, I don't remember when that was filed, so I'd
9 have to go back and check. I mean, that has not been since the
10 time of these negotiations, that's subsequent to.
11 So that is our current mode of operation, and we have
12 to do hard drive backups frequently because of the voluminous
13 nature. Obviously, when you're dealing with 900-page
14 interconnection agreements, every version you have to keep,
15 that fills up space quickly. So that is our current -- what
16 we're doing.
17 Outside of any type of litigation, we do have, you
18 know, documentation policies and how we handle that. However,
19 once an interconnection agreement is signed, that agreement is
20 the embodiment of what those parties have agreed to, and so
21 there is really no need to keep all of the notes and redlines
22 and versions at that point, again, pending no lawsuit.
23 There is not a specific decree to destroy anything at
24 BellSouth, more the recommendation would be, if you think
25 you're going to need these documents for anything further, then

1 you keep them. And if you don't think you're going to need
2 them, then you don't need them. From a legal standpoint, it is
3 my understanding that once the agreement is signed, that you
4 have that agreement and that's what you need. But again, if an
5 interconnection negotiator wanted to keep their notes for some
6 other reason, that's perfectly acceptable as well.
7 Q So, today, since you've got this litigation going on,
8 if you were in an interconnection negotiation with AT&T and you
9 were making notes, as you said that you did, and then you put
10 them into a redline, you would have to keep those notes today?
11 A Yes. We would keep all notes, e-mails.
12 Q But you would not have had to keep them in the 2001
13 time frame?
14 A No. Again, we have pending litigation now that we're
15 doing that.
16 Q Now, did you not tell me in North Carolina that your
17 guidelines provided that once the contract is executed, all
18 notes and all redlines also are to be destroyed?
19 A I don't think I said they are to be destroyed. I
20 think I said, and we can look at that particular point, that
21 that's acceptable. However, it's not a violation of any type
22 policy to keep things. That once you have an agreement and
23 it's signed, then it's at that point you don't need all of the
24 backup documentation. Again, we're not talking about -- you
25 know, if we were talking about five or ten pages of notes, that

1 might be one thing. We're talking usually about thousands of
2 pages of paper with the drafts that have gone back and forth.
3 But actually, if you'd like to look at the part of the
4 deposition because I noticed that in your brief, and I went
5 back and looked and didn't think that I had said you had to
6 destroy them.
7 Q Well, I have a question for you from that
8 perspective. Let me make sure I understand. Redlines are
9 available. You've given them to us in discovery in this
10 proceeding, but there aren't any notes; correct?
11 A Correct. For me personally, once I put those notes
12 into the redline I don't typically keep those unless I have
13 some action item that I need to follow up on.
14 Q Now, you're aware that AT&T asked in discovery for a
15 copy of your document retention guidelines so we could sort of
16 understand what your official policy was. Do you understand
17 that?
18 A Yes.
19 Q And you would not give it to us; correct?
20 A I think that our response was that that's not really
21 relevant to this proceeding. I mean, the issue in this
22 proceeding is, what did the parties agree was going to be
23 local, not, you know, did we do or not do what we should have
24 done from a document retention policy. I mean, the agreement
25 speaks for itself, and we've provided documents that are

1 responsive to the issue of this case.
2 Q So I guess you're taking the position that any notes
3 would have been irrelevant to this Commission's determination
4 as to what the parties intended --
5 MR. SHORE: I'm going to object to the extent there
6 were objections to AT&T's data requests. Those were, of
7 course, legal objections, so it's not Ms. Shiroishi to take a
8 position, it's for counsel to take that position. We took that
9 position; AT&T never followed up, never filed a motion to
10 compel. It's the first we've heard about it since then, but
11 it's not a question for a lay witness is my objection.
12 MS. CECIL: I'll withdraw the question.
13 BY MS. CECIL:
14 Q Ms. Shiroishi, let's talk about the Mississippi
15 agreement in terms of compensation for ISP traffic. The
16 compensation for ISP traffic in Mississippi is different than
17 the compensation for ISP traffic under the Florida agreement,
18 is it not?
19 A I guess that depends on what you mean by "different."
20 Are you talking about different rates or different concept,
21 what?
22 Q Well, in Mississippi, you agreed to a rate for ISP
23 traffic that you agreed to be bound to regardless of what the
24 FCC subsequently decided about how ISP traffic was to be
25 handled, did you not?

1 A Yes, that's correct.
2 Q And you didn't do that in Florida; correct?
3 A No.
4 Q You have the ability in Florida, if the FCC
5 subsequently comes back and orders something different about
6 ISP traffic, you get to implement that new FCC decision, do you
7 not?
8 A What would happen then is that either party could
9 trigger the modification of agreement clause in the general
10 terms and conditions if it's a change of law.
11 Q So for purposes of the Mississippi agreement, the
12 debate about ISP traffic is over, it's dead. It can never be
13 breathed any other life. You've agreed the issue is over.
14 A In that interconnection agreement, I believe that's
15 what the language states.
16 Q Okay. Now, tell me -- there's also a difference
17 about how voice over Internet protocol is handled under the
18 Mississippi agreement versus under the Florida agreement; is
19 that not correct?
20 A Correct. In Mississippi, AT&T was not doing any
21 voice over IP, and they stated they didn't have plans to in the
22 near future. So that agreement just states that basically AT&T
23 will not utilize voice over IP transmissions.
24 Q So for the two things that Mr. King and Mr. Peacock
25 said were very specific in the Florida negotiations as to the

1 definition of local traffic, those two items are very -- have
2 been handled very differently by the parties in the Mississippi
3 agreement; correct?
4 A I don't know that I'd say "very differently." I
5 mean, the language is different. With the ISP compensation
6 there's different things, but let me take this opportunity to
7 say I understand what AT&T has done in trying to tie the ISP
8 and the VOIP to make that be what this exclusion says. That's
9 not what this exclusion says. That's not what this exclusion
10 means. That's not what BellSouth ever said this exclusion
11 means. And I can say that with a great deal of passion because
12 when I read AT&T's testimony, and I've told you this in North
13 Carolina, it took me about eight times of reading that
14 testimony before I understood that argument because that's not
15 what this means.
16 This language says that it excludes calls that are
17 originated or terminated through switched access arrangements.
18 Switched access arrangements is a term. Again, it's not
19 capitalized here, and as we talked about earlier in the
20 agreement Mr. King read, means it has the meaning in the
21 industry that are set forth in the tariff. If we needed to
22 exclude ISP traffic, we would have done that. If we needed to
23 exclude voice over IP, we would have done that. We would have
24 said that. We wouldn't have said switched access arrangements
25 as established by the FCC or state commission because, quite

1 frankly, that doesn't even protect me. I mean, number one, ISP
2 traffic had been determined that it wasn't subject to
3 reciprocal compensation. Number two, voice over IP
4 transmissions are interLATA, so I don't need protection from
5 that.
6 And then the other thing, I think, to look at, and
7 this gets back to the whole technical issue, is that typically
8 ISP-bound traffic isn't -- and I say typically, I should
9 99.9 percent of the time isn't going to be originated or
10 terminated through a switched access arrangement. I mean, this
11 Commission is familiar with the ISP issue. They're dialed
12 locally and they're, you know, terminated over those local
13 facilities. That's why the parties got into so many disputes
14 early on about whether it was local or not. And that's
15 pursuant to the ESP exemption which said you don't buy access
16 for ISPs. And voice over IP is the same way. So it's not
17 even -- that language doesn't accomplish that. And I guess
18 maybe it's convenient that those things are different in
19 Mississippi than in the other states, and so therefore you can
20 somehow draw that conclusion after the fact, but that's not
21 what that exclusion was put in for. And we have this exclusion
22 again with the word "ruling regulatory body" versus "state
23 commission or FCC" with multiple carriers.
24 You know, the last time we did the matrix for the
25 generic docket, it was over 20 in the state of Florida. Nobody

1 at BellSouth has ever said that means ISP or voice over IP, and
2 I had never heard that, so I know I didn't say it. That's just
3 not what it says.
4 Q Well, you're not going to debate or deny that at the
5 time that this was being negotiated the parties also were
6 negotiating ISP traffic compensation and also voice over IP
7 compensation; correct?
8 A No. But the parties were also negotiating hot cut
9 language, but we're not here saying that this has anything to
10 do with hot cuts. I mean, I guess, again, it's convenient that
11 those things for AT&T were being negotiated at the time, and
12 thus this theory can be drawn, but that's not -- you know,
13 there were multiple, multiple issues being negotiated at the
14 same time. And, you know, we were under a time crunch because
15 we had to file for North Carolina by July 19th or 20th, but
16 that doesn't mean that because they were being negotiated in
17 the same, you know, two-month time period that that's what it
18 means. Again, we were negotiating multiple issues.
19 Q So you're saying it's just coincidental that those
20 issues that Mr. Peacock and Mr. King seem to be focussed on
21 were being negotiated at the very same time that you were
22 proposing this language and the parties were negotiating
23 whether it was going to be state commission or FCC or
24 regulatory ruling body, that's all just coincidental?
25 A Yeah. I mean, I wouldn't even say -- coincidental

1 kind of leads to some conclusion. I mean, the parties were
2 negotiating multiple issues. We were also negotiating POI, as
3 you talked about earlier, point of interconnection. We were
4 negotiating compensation on trunks and facilities. We were
5 negotiating multiple, multiple things, but that doesn't mean
6 that any of those have anything to do with this exclusion. I
7 mean, the exclusion says what it says. It says, "Except for
8 those calls that are originated or terminated through switched
9 access arrangements."
10 I can't speak for Mr. King. I can't speak for
11 Mr. Peacock. I know that if I were in a position of -- well,
12 when I am in a position of negotiating for BellSouth and the
13 language doesn't say what I think it needs to say, I propose a
14 change to it. And, you know, the language is clear. It says,
15 "through switched access arrangements." Mr. King testified he
16 understood what a switched access arrangement was, and again,
17 he wasn't there but he was dealing with Mr. Peacock who was
18 there. It's clear. It says what it says.
19 If the exclusion only meant VOIP and ISP, then it has
20 no meaning because ISP had already been excluded and VOIP had
21 already been excluded. I mean, ISP provisions are dealt with,
22 you know, ad nauseam in the agreement about how we're going to
23 do it. VOIP transmissions are dealt with in a separate section
24 and actually say they won't be compensated as local in a
25 separate section. So why do we need it here? I mean, that

1 just -- it's not logical. The exclusion says what it says and
2 means what it says.
3 Q Is there any reason that you didn't use the
4 terminology "switched access trunks" or "trunk groups" as
5 opposed to "switched access arrangements"?
6 A They mean the same thing. As we talked about
7 earlier, switched access arrangements means trunks and
8 facilities.
9 Q Okay. I want to ask you a few questions about these
10 extensive discussions that you had. I think a few minutes ago
11 you said that we've spent more time in this hearing room on
12 those discussions than what was covered with AT&T. So how did
13 you in your testimony say -- or why did you say in your
14 testimony that the parties had extensive discussions and drew
15 diagrams regarding what this provision meant?
16 A Because we did have discussions. Can you point me to
17 what page you're talking about?
18 Q Yes. It's your direct, Page 8, Lines 1 through 4.
19 A When BellSouth proposed this language to AT&T in the
20 May 22nd time frame, this was new to AT&T. They hadn't seen
21 it. BellSouth had it. You know, we had this language and we
22 proposed it. We had discussions about what it meant. And at
23 that time, you can look at the redlines and see. I believe it
24 was phrased, "Local traffic is defined as anything that
25 originates and terminates in the LATA, except for calls that

1 originate or terminate through switched access arrangements."
2 So we talked about it. What does that mean, how does that
3 work, much in the context of what we've talked about today,
4 although not in as much detail because obviously the questions
5 weren't being asked the same way.
6 When we talked about it, we talked about the fact
7 that again you've got your two criteria and trigger points, and
8 you're excluding in the second of which excludes switched
9 access arrangements. So those discussions took place, and we
10 talked about it. And we talked about it again from
11 May 22nd when BellSouth proposed it, and there were subsequent
12 meetings, and then we finalized around July 19th, 18th or 19th.
13 So that's why I said that, because we did have extensive
14 discussions. Granted, it hasn't amounted to the amount of
15 hours that we've spent in Florida and North Carolina in
16 depositions and hearings, but we did have discussions.
17 Q Let's talk about switched access traffic. And I want
18 to draw your attention to Section 5.3.3 which we've talked
19 about and the last sentence which is, "This Section is
20 interrelated to Section 5.3.1.1."
21 A Okay.
22 Q Now, that sentence uses a capital "S" in the word
23 "section," does it not?
24 A Yes.
25 Q And it says then, "The Section is interrelated to

1 Section 5.3.1.1." By using a capital "S" in section, you meant
2 there the entirety of the section, did you not?
3 A I'm not a lawyer and I won't testify to the legal
4 implications of that. I mean, I think that the agreement
5 speaks for itself.
6 Q Well, from your perspective negotiating the agreement
7 and implementing the agreement, does the entirety of this
8 section apply to 5.3.1.1 or not?
9 A Yes.
10 MR. SHORE: I just want to object to whether it
11 applies to 5.3.1.1. I mean, the language --
12 MS. CECIL: Is interrelated.
13 THE WITNESS: I mean, the language --
14 COMMISSIONER DEASON: Hold on just a second. There
15 has been an objection. Objection is overruled. You may answer
16 the question.
17 THE WITNESS: Okay. The language states that this
18 Section is interrelated to Section 5.3.1.1. I think that's
19 fine to say that the entire section applies to 5. -- or is
20 interrelated, not applies, but is interrelated to 5.3.1.1.
21 BY MS. CECIL:
22 Q Okay. So that would mean not just these provisions
23 that deal with voice over IP but the section which is --
24 specifically the first sentence which is limited to intraLATA
25 traffic in terms of switched access traffic?

A The entire section as you said, not just the first sentence or just the last sentence but the section.

Q And again, because I've always been confused about this, can you help me understand better why you added this last language, "This Section is interrelated to Section 5.3.1.1"?

A Sure. The issue of voice over Internet protocol transmission is an issue that is important to BellSouth as it is to many other carriers. This Commission knows that because we arbitrated the issue with Level 3, we arbitrated it with Adelphia, we arbitrated it AT&T, we arbitrated it with MCI, and we may have arbitrated it with Sprint all around the same time frame. So this Commission got plenty of hearing on that issue, and it was actually also in the generic docket.

When you're talking about voice over Internet protocol transmissions and whether or not they're switched access, you have typically the same issues that you have in that you've got what could be interstate, or what BellSouth would say is interstate, and then you also have the intrastate. Within -- obviously, the interstate portion is subject to the FCC jurisdiction, but within the state, that goes to each state commission. And in the case of VOIP transmissions, those are not going to typically be routed over switched access arrangements because that's not the point of using voice over IP. The point of using voice over IP is that you might even dial it as locally, it might look locally, but the end points

1 might be in different LATAs or different states. So the issue
2 about voice over Internet protocol transmissions gets to some
3 of the same, you know, compensation issues that have happened
4 or this Commission has heard on that type basis.
5 When you agree to a definition -- and we talked
6 earlier about some of the flavors, and I'm going to use the
7 same examples to hopefully make it an easier analysis. If I
8 had the first flavor that we talked about which is that local
9 was defined as anything that originated and terminated in the
10 ILEC's local calling area, then that's a smaller area than if I
11 said it's anything that originates and terminates in the --
12 well, potentially it's a smaller area. Anything that
13 originates and terminates is local and is billed by the
14 originating party as local because the ILEC's local calling
15 area may be smaller than the ALEC's local calling area.
16 When you're dealing with whether or not these voice
17 over IP transmissions are going to be considered switched
18 access traffic or not, you have to take into account whether
19 you've determined that you're going to have a basic local
20 calling area determine your compensation for local or a larger
21 area. And in this case with AT&T, we've agreed to an even
22 larger area which is anything in the LATA except for switched
23 access arrangements or calls that are originated or terminated
24 over switched access arrangements. So the potential problem
25 that BellSouth could have if someone came and tried to adopt

1 this definition of voice over IP without taking the local
2 traffic definition that goes with it is that I might have here
3 treatment for voice over IP transmissions within the LATA, but
4 let's say that their interconnection agreement deemed local
5 anything in the local calling area. Now I've got a gap about
6 what I do when that transmission originates and terminates
7 outside the local calling area but within the LATA because I
8 have a local traffic definition that's smaller than what I've
9 determined I'm going to do on VOIP. So this interrelated
10 sentence was put in only to address the fact that if you're
11 going to take this VOIP language -- which BellSouth felt was
12 probably going to happen considering that we had somewhat
13 compromised on this language. This wasn't BellSouth standard
14 language that VOIP transmissions are switched access. This was
15 kind of a compromise, and we thought this might be appealing to
16 some other ALECs -- that they would also have to relate back
17 and take the definition of local traffic so that you didn't
18 have that gap that was determined earlier.
19 I say this in my rebuttal testimony and I'll say it
20 here. You know, the definition of local traffic doesn't say
21 that it's interrelated to switched access traffic, and that's a
22 minute subtlety maybe, but I think that's pointing as to what
23 the intent of the parties was. I don't have a concern if
24 somebody wants to take this local traffic definition and not
25 the switched access traffic definition here. I do have a

1 concern if they want to take this switched access traffic
2 definition to deal with voice over IP provisions and not the
3 local traffic definition. So that's why that sentence was put
4 in.
5 Q Okay. So just so I understand, if you have a
6 situation where in the same paragraph you have a definition of
7 switched access traffic and you're also talking about voice
8 over IP being within the LATA, as you have talked about it, you
9 then need to make sure that that definition of switched access
10 traffic is interrelated to any definition of local traffic,
11 particularly here where it's LATAwide; is that correct?
12 A Well, it depends. It's really whether I've
13 compromised on the voice over Internet protocol issue or not.
14 That was my concern. Not so much the switched access traffic
15 definition but how the voice over Internet protocol
16 transmissions provisions in that agreement were.
17 Q So if you've got a provision that deals with voice
18 over IP that relates it to being access or not depending on
19 whether it's in the LATA or out of the LATA, that's when you
20 have to have it interrelated. Is that what you're saying?
21 A It would depend on whether BellSouth had moved off of
22 any point or changed the language about how the parties were
23 going to deal with voice over IP transmissions. If a carrier
24 had adopted the standard language of BellSouth, which is that
25 regardless of transport protocol method used, here's how we're

1 going to do it, then I wouldn't have a need to interrelate that
2 back. But if BellSouth had offered some other language like
3 you see here which says, "The parties have been unable to agree
4 as to whether VOIP transmissions constitute switched access
5 traffic," and then we go on to say what we're going to do, at
6 that point where we're kind of agreeing to disagree, that's
7 when you'd need that interrelationship.
8 MS. CECIL: All right. I've got an exhibit that I'd
9 like to mark. Commissioner Deason, I don't remember what
10 number we're up to.
11 COMMISSIONER DEASON: This will be Exhibit 26.
12 (Exhibit 26 marked for identification.)
13 COMMISSIONER DEASON: Ms. Cecil, how much more do you
14 have for this witness?
15 MS. CECIL: Oh, I'd probably say about another hour,
16 Commissioner.
17 COMMISSIONER DEASON: Another hour. Okay. Perhaps
18 now is a good time to take a recess, and we will recess for 15
19 minutes.
20 (Brief recess.)
21 COMMISSIONER DEASON: Call the hearing back to order.
22 Ms. Cecil, before you begin, just let me make a remark or two.
23 First of all, let me say, I understand the importance of this
24 issue, and I appreciate the thoroughness with which we're going
25 over all of these issues because I think both parties indicated

1 at the beginning this was a rather simple interpretation of
2 contract language. We're not arbitrating an entire agreement,
3 and we're spending about as much time as we would otherwise.
4 We also have gone to the great trouble of inserting
5 an entire record in another state in this proceeding. And I
6 thought that was going to expedite things here. And my
7 comments are not directed to you, Ms. Cecil, or to you,
8 BellSouth, but we have heard a lot about this issue. I think
9 we need to wrap it up. That's not to take away anything that
10 you feel is important to contain to covering your
11 cross-examination, but we've spent, as the witnesses indicate,
12 more time in this hearing room which the parties used to
13 discuss this issue when they were negotiating the contract. I
14 think the reverse should take place.
15 I think you all should spend eight hours negotiating
16 it and making sure you're clear on the contract language before
17 you bring these disputes to us. I think you've got your
18 priorities wrong. Now, having said that, I'll put my smile
19 back on my face and we will proceed.
20 MS. CECIL: Thank you, Commissioner.
21 BY MS. CECIL:
22 Q Ms. Shiroishi, if we could discuss for a few minutes
23 Exhibit Number 26. This appears to be a filing that BellSouth
24 made on March the 14th, 2003 with the Florida Commission, would
25 you agree?

A Yes.

Q And this is an interconnection agreement that Auglink Communications has executed with BellSouth; is that correct?

A Correct.

Q And it appears to be in the most part adoption of the AT&T/BellSouth agreement that we have been discussing, would you agree?

A Yes.

Q If you would, turn over to Page 4 and look at Section 5.3.1.1. Do you see that you've used there this switched access arrangements exclusion language? Do you see that? "Except for those calls that are originated or terminated through switched access arrangements."

A Yes.

Q And in that case you decided to change the AT&T language, and you modified it to include a parenthetical, "(i.e., traffic that is exchanged over switched access trunk groups)." Do you see that?

A Yes.

Q Why was that change made from the AT&T agreement?

A Well, obviously BellSouth doesn't want to continue to have complaints and issues. After AT&T filed its complaint, we were concerned that another carrier who adopted the AT&T agreement may try to take AT&T's interpretation of what this means, so we put in a clarification. I think it's important to

1 note that what's put there, the i.e., id est, and I'm always
2 proud when I get to use my Latin background, all that means is
3 that is, that clarifies. Traffic that is exchanged over
4 switched access trunk groups. And that's exactly what we've
5 said in this hearing today. That's what that language means
6 that's on the board there; it's what this language in front of
7 you means.
8 Q Okay. Let's move over to Page 5 where there is a
9 change that's been made to this definition of switched access
10 traffic, 5.3.10. Do you see that?
11 A Yes.
12 Q The first change that you made from the AT&T
13 agreement was that rather than limiting switched access traffic
14 to interLATA traffic, you inserted telephone toll services
15 instead. Do you see that?
16 A I see those words, yes.
17 Q And telephone toll service, is that a broader
18 category or a smaller category than interLATA traffic?
19 A Say it again. Intra or inter?
20 Q Inter.
21 A Telephone toll services is defined typically in the
22 Act as anything that's an offering to the public for a fee
23 outside of local. I think it's important to note that this
24 language is actually not so much changed from the AT&T as this
25 is what's in BellSouth's standard agreement that we offer and

1 what we offered to AT&T in the beginning. AT&T and BellSouth
2 did negotiate some changes to it, but this actually tracks what
3 BellSouth originally offered to AT&T on the first couple of
4 sentences.
5 Again, the voice over IP provisions in this section
6 which picks up additionally any public switched telephone
7 network interexchange telecommunications traffic regardless of
8 transport protocol method, and that's the same thing as
9 addressing voice over IP, is BellSouth's position. So this
10 company, Auglink, was willing to take BellSouth's position on
11 voice over IP protocol transmissions instead of having language
12 that said we agree to disagree.
13 Q And the other change is that the interrelated
14 language that you've discussed earlier was removed from this
15 definition of switched access traffic; isn't that correct?
16 A Correct. Again, because, as I talked about earlier,
17 you only need that interrelated language when you have a
18 disagreement or a compromise on the voice over IP, and this
19 carrier was fine with not having that.
20 Q Let's discuss for just a few minutes the type of
21 trunks that AT&T would have to use under this agreement in
22 order to have it compensated as local compensation. You are
23 aware, are you not, that there is language in Attachment 3 that
24 talks about AT&T converting existing trunking arrangements to
25 local-only interconnection arrangements? Do you understand

1 that?
2 A Are you referring to the exhibit to my direct
3 testimony?
4 Q Yes, that's correct.
5 A It refers to conversion of trunk groups for local and
6 intraLATA toll traffic, yes.
7 Q Has BellSouth requested that AT&T do any conversion
8 of any of its existing trunk groups from switched access to
9 local interconnection?
10 A No. Again, the language allows either party to
11 trigger that, and under the current agreement, how the trunking
12 is established determines compensation. BellSouth really
13 doesn't have a need or desire for AT&T to change that if AT&T
14 is okay with the way it is.
15 Q Okay. Now, with respect to BellSouth's network, you
16 use only local interconnection trunks to carry your traffic, do
17 you not?
18 A Our internal traffic?
19 Q The traffic that you provide -- traffic that you
20 carry for customers.
21 A From an entire BellSouth network perspective, I
22 wouldn't agree with that statement. Are you talking about
23 interconnection traffic, or are you talking about traffic
24 that -- I mean, when BellSouth carries traffic for our own
25 internal network, obviously we have a nine-state network, and

1 those trunk groups are, you know, various types of trunk groups
2 in the way that they're carried. We interconnect with other
3 carriers with switched access trunk groups and with local toll
4 trunk groups.
5 Q Right. But are you ordering from them switched
6 access arrangements, or are you providing to them switched
7 access arrangements?
8 A Typically we are providing switched access
9 arrangements. What we order from other carriers is typically
10 local toll trunk groups because BellSouth does not -- BST does
11 not carry things outside the LATA for interconnection purposes.
12 Q So the way your network has been built, it's
13 basically a local-only network? We've discussed that earlier.
14 A Again, I don't want to say the way our network is
15 built. For interconnection purposes, yes, what we purchase
16 from other carriers.
17 Q So with respect to this language here, "originated or
18 terminated through switched access arrangements," that's not
19 going to have any impact on BellSouth because you don't use
20 switched access arrangements in the same capacity and form that
21 AT&T uses; right?
22 A Not in the same capacity, no.
23 Q Okay. So all of your traffic within the LATA is
24 always going to be local; correct?
25 A Under this definition, I would have to check, but

1 probably, yes.
2 Q Okay. Now, with respect to AT&T's hybrid local long
3 distance network, you don't have that arrangement either, do
4 you?
5 A No. BST is not allowed to cross LATA boundaries.
6 Q Right. But you don't have any long distance switches
7 anywhere in your territory; correct?
8 A My understanding is not BST.
9 Q And then if we can just move to a review of the
10 redlines that you've put together, that I've put together in
11 the matrix, we'll be complete.
12 MS. CECIL: Commissioner Deason, if we could have
13 this marked as Exhibit Number 27.
14 COMMISSIONER DEASON: It will be so identified.
15 MS. CECIL: Thank you.
16 (Exhibit 27 marked for identification.)
17 BY MS. CECIL:
18 Q Now, Ms. Shiroishi, in the context of discovery
19 between the parties, BellSouth provided AT&T redlined versions
20 of the contract that were exchanged between the parties over
21 the course of several months. Would you agree with that?
22 A Yes.
23 Q And when we took your deposition, I showed you a
24 matrix that I had put together which I had constructed from the
25 redlined versions of the contract. Do you remember that?

1 A Yes.
2 Q Okay. And what I've done is I've converted that into
3 this particular exhibit. And I'd like to show you some of the
4 language as it materialized in order to understand what the
5 parties were negotiating at what particular point in time.
6 COMMISSIONER DAVIDSON: Chairman, can we get this so
7 it pops up on our screens? Do you have it?
8 COMMISSIONER DEASON: No, but you may need to turn
9 the toggle switch, the upper right-hand. Bear with us for just
10 a moment.
11 (Discussion off the record.)
12 COMMISSIONER DEASON: We'll just turn our chairs.
13 MS. CECIL: Do you have a hard copy of the exhibit?
14 COMMISSIONER DEASON: Yeah, we can work from it.
15 BY MS. CECIL:
16 Q Ms. Shiroishi, what I've put up on the screen is the
17 redline that you sent to Mr. Peacock on the July 11th, 2001.
18 So would you not agree at that point in time that you had not
19 yet proposed the language that we have been discussing which is
20 over here on the board?
21 A Again, the language -- the meaning of the language
22 and the substance is the same. If you look, it says, "Local
23 traffic is defined as any telephone call that originates and
24 terminates in the same LATA, except for those calls that are
25 originated or terminated through switched access arrangements

1 as established by the ruling regulatory body." That meaning is
2 exactly the same as what's up here. The words, I would agree
3 that are up here, were not in this document.
4 Q Okay. And you'll see under the disagree, AT&T
5 proposal and BellSouth proposal that the argument at that point
6 in time was regarding information service provider traffic;
7 correct?
8 A That is still noted in here. At that point in time,
9 obviously the FCC had issued its order. And I would have to go
10 back and look at the entire document to see, but I would think
11 at that point that the disagree was not so much as it's worded
12 here but just as Mr. Peacock testified earlier that the parties
13 need to put in the placeholder language to implement the FCC's
14 ISP order on remand.
15 Q Okay. Let's move to -- now, coming up on the screen,
16 on July the 17th is when you provided the language regarding
17 settlement of ISP calls; is that not correct?
18 A That's what your matrix says. Subject to check the
19 redlines. I haven't compared this with the documents produced.
20 Q But to the best of your knowledge, that's the
21 first time that AT&T saw how they were going to solve the ISP
22 language in terms of actual contract language, and it was on
23 July the 17th?
24 A As we talked about in North Carolina, the lawyers
25 were actually working on this issue as well. So I'm not sure

1 that it's the first time the language was seen. It's the
2 first time I think it was in the document of Attachment 3, but
3 there could be other documents, e-mails, faxes that went back
4 and forth.
5 Q And at that point in time, on the 17th, you're still
6 using "established by the ruling regulatory body;" correct?
7 A Yes.
8 COMMISSIONER DAVIDSON: Chairman, I have a question
9 for counsel on this just so I'm clear in the nature of the
10 exhibit. What part of this exhibit is compilation work product
11 and what part is evidence? Is all this evidence that's just
12 been cut and pasted from existing exhibits, or --
13 MS. CECIL: Yes.
14 COMMISSIONER DAVIDSON: -- is any part of this
15 attorney sort of commentary or narrative on how to navigate?
16 MS. CECIL: Where there are asterisks and it says,
17 "Shiroishi sends to Peacock," that is added by me. Where the
18 language is there, the contract language, that's from the
19 redline versions which had time and date stamps associated with
20 them.
21 COMMISSIONER DAVIDSON: Thank you.
22 BY MS. CECIL:
23 Q Ms. Shiroishi, what we're putting on the screen
24 now -- Ms. Shiroishi, this indicates that on July the 18th,
25 that was when AT&T first saw the language which changed

1 "regulatory ruling body" to "state commission or FCC." Would
2 you agree with that?
3 A Subject to check with the original document, yes.
4 Q And the agreement then is signed the next day, so
5 this was a last-minute change that was done by the parties,
6 would you not agree?
7 A Yes.
8 Q And here you have highlighted in blue that
9 Mr. Peacock is continuing to try to make changes regarding
10 compensation for ISP traffic. Do you see that?
11 A Yes.
12 Q Okay. And that's July the 19th. You eventually
13 signed the agreement on July the 19th later in the day, do you
14 not?
15 A For the state of North Carolina, yes. For the state
16 of Florida, it was not signed until October of 2001.
17 Q Right. But the agreement had been reached
18 conceptually at that point in time on July the 19th even for
19 Florida?
20 A We had agreed regionally, yes, to the concepts.
21 Q So then later on in the day on July the 19th,
22 Mr. Peacock sends you language, and then you resend back to him
23 and you say, nope, we're not going to change the ISP traffic
24 language anymore; correct?
25 A Correct. Again, our lawyers were actually working

1 this issue about what would happen from the date that the ISP
2 order was effective until the agreement was signed or amended.
3 And so this issue is being worked from a legal standpoint as
4 well.
5 Q So you're still arguing up until the last minute
6 about how ISP traffic is going to be compensated because you
7 said, nope, we're going to take out the red language; correct?
8 A Well, I think the way I would characterize that is
9 that if you read the language, it's talking about the date from
10 the FCC ISP order until such time as we get these amendments or
11 agreements executed. So I don't think it's fair to
12 characterize it's the whole of ISP. It was talking about a
13 specified time frame that was in discussion between the
14 parties. And that's what that was about.
15 Q Okay. Well, let's move and see what -- and that was
16 where the parties eventually ended up on 5.3.1.1. The last
17 slide we looked at was actually what went into the agreement;
18 is that correct?
19 A Well, in the last slide I have, it actually still has
20 the "in no event," and I don't think that -- did that get put
21 in the signed agreement? I don't think so. Do we need to
22 check that? I'm not sure what you're asking me.
23 Q That's okay. Let's look to the switched access
24 traffic matrix to see what happened relative to 5.3.3. Now,
25 when you first sent him the definition of switched access

1 traffic, it's on July the 11th, is it not?
2 A Subject to check the documents again, yeah, but that
3 seems to be my recollection as the date.
4 Q And you used there at that point in time telephone
5 toll service?
6 A Yes.
7 Q And that would have been a more expansive definition
8 of switched access traffic than what had been agreed to in
9 5.3.1.1, would it not?
10 A I don't think I can agree with that because again
11 what this definition was dealing with was the voice over IP
12 issue, and we were giving a definition of switched access
13 traffic in that context. So I don't think it's a fair
14 characterization to say it was more expansive or less.
15 Q Well, telephone toll traffic, as you, I believe, have
16 testified in your deposition, can mean all switched access
17 traffic, correct, not just certain subsets of switched access
18 traffic; correct?
19 A Well, again, telephone toll service is typically a
20 phrase that's used more from a retail perspective versus
21 switched access is more of a wholesale type perspective. But
22 this switched access traffic definition with the voice over IP
23 provisions that are here again was in the contract. The local
24 traffic definition that we have up here was in the contract
25 again with the minor changes that have been made, and the local

1 traffic definition still had the exclusion for the switched
2 access and what was and wasn't local under that. And so that
3 side by side with the definition I don't think expands or
4 decreases the scope of this switched access traffic definition.
5 Q Okay. Let's look because I think the parties get
6 more specific regarding that definition. So the next time the
7 parties exchange a redline, Peacock strikes out telephone toll
8 service; does he not?
9 A Yes, that's not showing up as stricken. I guess it's
10 just blank there?
11 Q Well, the blue indicates that he was attempting to
12 strike it, at least that's what it shows in the redline.
13 A Okay. Does it show in the redline as actually being
14 stricken or just not there?
15 Q No, it shows it highlighted --
16 A Highlighted.
17 Q -- consistent with his discussion that the parties
18 would highlight in order to have discussion.
19 A Okay. I guess I just don't know if that proposal was
20 actually to strike it out or just to highlight it for
21 discussion.
22 Q Okay. Well, let's move and see what happens next.
23 A Typically, a strike out would be shown with a line
24 through it.
25 Q And this is the first time that you add the

1 interrelated section reference; is that not correct?
2 A I'm sorry, I've having a hard time following it. So
3 what you're saying that the redline shows is that there was
4 actually another sentence. It's not in the nonred but that the
5 red would go up above?
6 Q Yes, that's correct.
7 A Okay. Subject to check the document.
8 Q All right. So you had originally given the first
9 definition of switched access traffic on July the 11th, and you
10 do not add the interrelated in until July the 17th; correct?
11 A Right. And I believe there was also a corresponding
12 change. If you'll give me just a moment. Right. If you look
13 just prior to that, and I'm not sure if you can back the slide
14 up or not, but for those of us with paper copies, just prior
15 the last sentence had read, "The parties agree to abide by any
16 effective and applicable FCC rules and orders regarding the
17 nature of such traffic and the compensation payable by the
18 parties for such traffic, if any; provided however, that VOIP
19 transmissions which originate in one local calling area and
20 terminate in another local calling area shall not be
21 compensated as local."
22 When the interrelated sentence is added, the sentence
23 just prior to that was also changed from "local calling area"
24 to "LATA," so that it reads, "if any; provided however, that
25 any VOIP transmissions which originate in one LATA and

1 terminate in another LATA (i.e., the end points of the call),
2 shall not be compensated as local traffic." So at the time
3 that that changed from local calling area to LATA was made is
4 the same time that the interrelated section was added. And
5 again, that's what we were talking about earlier. That was to
6 avoid that "gap" that could occur if you had VOIP transmissions
7 provisions that were dealing in LATA context in a local traffic
8 definition that was not.
9 Q All right. Let's move on. Now, here you are sending
10 Mr. Peacock an e-mail pretty much one day before the agreement
11 is signed for North Carolina and agreed to for other states,
12 and you're trying to get switched access traffic defined to
13 include intraLATA intrastate traffic. Now, that's inconsistent
14 with what the parties had agreed to in the definition of local
15 traffic over in 5.3.1.1, is it not?
16 A No. Again, the two were side by side. The local
17 traffic definition dealt with it with the exclusion and the
18 switched access traffic definition here added -- and I don't
19 remember the specifics of this discussion. I'm having a hard
20 time following this a little bit. It was easier for me in the
21 redlines where it shows up exactly. But again, after
22 Mr. Peacock highlighted the telephone toll service, I'm
23 assuming that he wanted to change that to something else, and
24 that's when we put these in, but this was not the final
25 language that the parties agreed to.

1 MR. SHORE: Chairman, if I could interrupt just for a
2 second. The exhibit -- normally I get accused of talking too
3 loudly, so this is certainly a change for me. The exhibit that
4 I used with Mr. Peacock was actually the deposition that -- the
5 matrices that Ms. Cecil used in Ms. Shiroishi's deposition that
6 has actual redlining in it, and the witness just said she's
7 having trouble following this exhibit because it doesn't have
8 the redlines. Would it be okay to refer or give her a copy of
9 Exhibit 23 so it's easier for her and maybe it will speed up
10 the questions?
11 COMMISSIONER DEASON: Ms. Cecil.
12 MS. CECIL: We have it. That would be fine.
13 BY MS. CECIL:
14 Q All right. Let's see. Now, Ms. Shiroishi, if you
15 would look to the e-mail that Mr. Peacock sent you July the
16 19th. Again, that's the day that you signed the agreement. He
17 basically has highlighted for discussion intraLATA intrastate.
18 Do you see that?
19 A Yes.
20 Q And at that point in time thereafter later in the
21 day, you agree with Mr. Peacock, and you strike out intraLATA
22 intrastate traffic, do you not?
23 A That's what it appears from the matrix assuming that
24 tracks with the documents, yes. Again, because we had
25 addressed in the definition of local traffic the exclusion for

1 switched access, this switched access traffic definition was to
2 deal with voice over IP protocol. And what we had agreed on
3 voice over IP protocol, which is in the bottom part of that, is
4 that anything that originated and terminated in the LATA we
5 would basically agree to disagree on how that would be handled.
6 And so we made that consistent with the -- in the switched
7 access traffic definition.
8 Q So on the 19th, Mr. Peacock is saying, no, I'm not
9 going to agree that switched access traffic includes intraLATA
10 intrastate, didn't he?
11 A Well, I don't know if he said those words or not. I
12 mean, what the parties ended up agreeing to in the language is
13 what you see in the final and again in the context of voice
14 over IP transmissions.
15 Q All right. Let's look at another section of the
16 contract that the parties had negotiated. Compensation for
17 intraLATA toll traffic. Would you not agree, Ms. Shiroishi,
18 that in addition to trying to get a definition of switched
19 access traffic, in addition to having the definition of local
20 traffic, on July the 18th, you were also continuing to try to
21 get a specific provision in there that dealt with compensation
22 for intraLATA toll traffic?
23 A No. Actually, what this reflects is that those
24 provisions were in the contract and that I struck them, not
25 that I was trying to get anything in.

1 Q But prior to that, they had still been in the
2 contract. This is when you finally strike compensation for
3 intraLATA toll. It is not until July the 18th, 2001, would you
4 agree?
5 A Right. Again, the parties had been negotiating for
6 some time, and this language had been in there from the time
7 that BellSouth filed its arbitration petition and prior. In
8 finalizing the document and doing another reread through it to
9 make sure that all the provisions were final and we were ready
10 to sign, I am the one who actually looked at this and said, oh,
11 we don't need this anymore because we've got other provisions
12 that cover it.
13 The local traffic definition covers what's going to
14 be local and excludes switched access, and we don't need a
15 section to talk about intraLATA toll because there's no need
16 for that anymore. Under this contract, everything is going to
17 be local or switched access.
18 I personally think, obviously, it's hard when your
19 own e-mail and action is used against you in a hearing, but I
20 think it's pretty telling that I'm the one who said we don't
21 need this anymore. AT&T didn't raise it. And if AT&T, you
22 know, had an issue with it, I think they would have raised it.
23 I'm the one who said to AT&T, and that's in the e-mail that is
24 transmitting it, hey, I realized we don't need this anymore,
25 and I didn't say this, but the reason that we don't need it

1 anymore is because the local traffic definition covers what's
2 going to be local and excludes from local anything that
3 originates or terminates over switched access arrangements and
4 thus is switched access.
5 In a definition, again going back to a flavor one, of
6 local calling area where the local calling area, be it, the
7 ILEC or the ALEC determines what's local, you could have calls
8 that are not traversing switched access arrangements but are
9 traversing local toll arrangements but are still considered
10 toll or intraLATA toll because we have with a definition of
11 local that is specific to the basic local calling area. And
12 this intraLATA toll provision covers that situation.
13 When you expand that to the parties' definition, you
14 don't need that anymore. This definition characterizes things
15 as local or switched access. So I sent back to AT&T and said,
16 we don't need this provision anymore, and they agreed.
17 Q I understand you'd like to take credit for deleting
18 this language, but at the same time, when we looked at the
19 definition of switched access traffic, you were attempting to
20 get in intraLATA toll as switched access traffic. We went
21 through that in the other matrix, wouldn't you agree?
22 A Well, I think that there's a difference in that,
23 number one, that wasn't ultimately agreed to, but number two,
24 when you look at that, it goes on to have other clarifications
25 of switched access including -- it talks about A, B, C, D, 500,

800, their successors. I mean, there's other type clarifications about what that is, not just anything intraLATA. I mean, obviously, if that were the case, there would be no local traffic, it would be everything intraLATA. So I don't think that the analogies are similar.

Q Okay. Let's see what happens to this language. July the 19th it's still in there, coming out. And it comes out.

A Yeah, but it's really --

Q All language --

A I'm sorry. To back up. It's not -- on July 19th at 9:59, it's actually not -- it's stricken out; right? In your matrix here, it looks like it's still there, but it's really deleted.

Q And then when you finally, finally, finally have an agreement that you can sign on July the 19th at 9:59 a.m., that is when that language is finally all deleted; correct?

A Well, I'm not sure because the other matrix -- and I don't have all the documents in front of me which would be the easiest thing, but the subsequent matrix that you sent has it stricken out on the 2/21 e-mail from Peacock to Shiroishi.

Q But having now looked at this matrix, Ms. Shiroishi, it does indicate, does it not, that in the last few days of the negotiations, the parties were continuing to negotiate ISP traffic, they were continuing to negotiate voice over IP, they were continuing to negotiate a definition of switched access

1 traffic, and they were also continuing to negotiate whether or
2 not language would be in the agreement relative to compensation
3 for intraLATA toll traffic. That was all happening within the
4 last few days of the agreement, was it not?
5 A We were finalizing the language to embody what the
6 parties had agreed to and that did involve a review of all
7 those sections and again a final review to make sure everything
8 was consistent. We weren't having substantive issue
9 discussions about what should or shouldn't be local, whether
10 ISP should or shouldn't be compensated at these rates. What we
11 were doing is going through the language and lining it up with
12 what the parties had agree to, which was a form of
13 negotiations. It was language negotiations, but we were not
14 still at that point debating whether, for instance, AT&T wanted
15 to elect this definition or not, those type discussion issues
16 of that nature.
17 What we were doing is AT&T had said, we want this
18 definition of local traffic, and we were finalizing that issue
19 around it. Yes, we were also finalizing language around voice
20 over IP and putting in the placeholder language, and the
21 intraLATA toll language being stricken again was to line up
22 with what the parties had agreed on local traffic.
23 MS. CECIL: No other questions.
24 COMMISSIONER DEASON: Staff.
25 MS. CHRISTENSEN: Hopefully I have just a few

1 questions.

2 CROSS EXAMINATION

3 BY MS. CHRISTENSEN:

4 Q I just want to clarify, when you're using the
5 definition of local toll, do you mean traffic that has been
6 traditionally treated as intraLATA toll traffic?

7 A When I'm using the phrase "local toll," I'm using
8 that in the context of arrangements, trunk groups. In the
9 industry, there are switched access arrangements, and there are
10 also things that are commonly referred to as local toll trunk
11 groups. And in fact, in some of the documents that BellSouth
12 produced relative to the discovery that AT&T requested, we gave
13 our ordering guide. And in that ordering guide you will see
14 that actually designates traffic types.

15 When an ALEC orders an arrangement from BellSouth, be
16 it, switched access, be it, local toll, or local or
17 interconnection or whatever, they actually put a traffic type
18 on that ASR or that ordering form that they use. Local toll,
19 or LTLT, as sometimes we'll refer to it from just a technical
20 standpoint, is a designation that these are trunk groups that
21 are going to carry traffic that's within the LATA, local and
22 intraLATA toll. And that designator is put on the order form
23 to BellSouth and that's how they're provisioned, either as
24 local toll trunk group, and there are other type modifiers that
25 are in that ordering guide that go with that, or as switched

1 access arrangements. So when I'm referring to local toll, I
2 apologize if I didn't make that clear, I'm actually referring
3 to the trunk group type that is ordered by the CLEC or ALEC.
4 Q And I think you explained it a little bit, but maybe
5 you can explain it a little bit further, but how are, in your
6 definition, local toll trunks different from switched access
7 arrangements?
8 A Local toll trunks have slightly different signaling,
9 and again I'm not a trunking expert, so I don't want to go too
10 far into detail. I'll tell you what I know. The signaling on
11 local toll trunks are somewhat different on the originating end
12 than -- or are different on the originating end than switched
13 access trunk groups. Again, the term "trunks and facilities"
14 is the same thing as trunk groups is the same thing as
15 arrangements. So we could be saying local toll trunk groups or
16 local toll arrangements. Those phrases are the same, but there
17 are some signaling differences. And also the dialing and
18 technical capabilities and how those are accessed are slightly
19 different. In the switched access tariff, it actually lays out
20 those for the switched access arrangements, and then the
21 interconnection agreement lays out for the local toll, or LTLT,
22 arrangements or trunk groups.
23 Q Let me clarify, I think you brought it up earlier in
24 your testimony, but I'm not sure if we got a specific answer.
25 Where do you buy the intraLATA toll trunking from?

1 A The local -- and again, local toll I should probably
2 clarify one more time is typically in the industry local/toll,
3 so it's one kind of phrase that goes together -- are offered
4 for purchase under the interconnection agreements with the
5 ALECs, and again BellSouth purchases those from ALECs for our
6 traffic going to them, they purchase them from BellSouth for
7 their traffic coming to us. And those are ordered -- we have
8 lots of ordering guides that specify all the technical aspects
9 of it. But the overall descriptor is in Attachment --
10 typically Attachment 3 or whatever the local interconnection
11 attachment of the agreement is. And there's a section in there
12 that's called trunking or trunking arrangements.
13 Q Okay. And that brings me, I guess, to my next
14 question. Is Attachment 3.1 that provision, the trunking
15 provision, for that AT&T/BellSouth agreement? That's where
16 you're talking about they would buy or purchase that local/toll
17 trunking?
18 A I believe you're right. Let me check the reference
19 real quick. That's in the exhibit to my direct testimony?
20 Q Correct, Page 9 in Attachment 3.
21 A Yes. Section 3, interconnection trunking and
22 routing.
23 Q And let me ask you this. You had indicated earlier,
24 and I just want to clarify it in my mind, that when you change
25 the definition of local traffic, you also changed this

1 interconnection trunking provisions? Is that my understanding
2 of what your testimony was?
3 A The language, yes, did change. If you look at AT&T's
4 first interconnection agreement, it has different provisions
5 for trunking and terminating than the current second
6 interconnection agreement.
7 Q And is my understanding of the second interconnection
8 agreement, was it -- in looking at the language on the
9 interconnection trunking agreement, it appears that the parties
10 intended to change their trunking pursuant to the second
11 agreement within a 45-day period. Is that your understanding
12 of why that definition -- or how the trunking was in there?
13 Was that what that was, to accommodate the change in the
14 definition of local traffic?
15 A Right. Yes. The parties had different trunking
16 arrangements under the first interconnection agreement, or
17 provisions, I should say, and then when we put in this
18 language, it did clearly contemplate that, and it's upon 45
19 days of either party's request. I think it gives a little
20 longer to actually do it but that goes in. And I believe
21 actually that this language change is referenced in
22 Ms. Stevens' notes from the discovery. I just happened to see
23 that last night about the upon the 45 day. So, yeah, I mean,
24 that provision was put in there to contemplate that upon either
25 party's request, we could migrate or convert over to this

1 configuration versus what's under the first agreement.
2 Q So let me understand. Under the first agreement,
3 AT&T was provisioning quite a bit of their local traffic over
4 the same switched access arrangements as, you know, switched
5 access traffic. That was under the first one, and that was
6 permissible under the first one; correct?
7 A Correct. And again, how you determined what was
8 local for minutes of use was under a different scheme as well,
9 but yes.
10 Q Okay. And so then under the second agreement, is it
11 your position that when you changed the definition of local
12 traffic to have the exception that switched access arrangements
13 would not be treated as local, that that's why the trunking
14 provisions were changed in here?
15 A Yes. Again, the trunking provisions that are in here
16 line up fairly closely with what BellSouth has in many
17 agreements, but the conversion language is somewhat unique to
18 AT&T because we don't have that in every agreement. So, yes,
19 those two -- clearly if you have a definition that's derived
20 from trunking or a routing standpoint, then, yes, you would
21 need to convert that in order to align. Again, that would be
22 at either party's request.
23 Q Okay. Has either party made that -- such a request
24 in this case yet?
25 A No.

1 MS. CHRISTENSEN: Okay. No further questions.
2 COMMISSIONER DEASON: Commissioners?
3 COMMISSIONER DAVIDSON: Thank you. A couple of
4 questions. In the October 2001 interconnection agreement, is
5 there -- does the agreement contain any other provisions
6 relating to VOIP, or is the only VOIP provision 5.3.3?
7 THE WITNESS: I believe that the only provision is
8 5.3.3. Before I gave you an absolute yes, I'd want to do a
9 word search, but I'm 99 percent certain that that's the only
10 provision.
11 COMMISSIONER DAVIDSON: Counsel, do you all know if
12 that's the case?
13 MR. SHORE: To my knowledge and my review of it is
14 that 5.3.3 is the only provision that deals with VOIP. I'm
15 sure Ms. Cecil --
16 MS. CECIL: I would agree.
17 COMMISSIONER DAVIDSON: The document is what it is.
18 I was just curious for purpose of a follow-up.
19 MR. SHORE: I recall looking and that's the only
20 place I found it.
21 COMMISSIONER DAVIDSON: Was Paragraph 5.3.3 -- is it
22 BellSouth's position that Paragraph 5.3.3 on switched access
23 traffic was only included because of the dispute over VOIP?
24 THE WITNESS: Yes. In fact, in the e-mail that
25 transmits the first time that language shows up, the July 11th,

1 I believe it was, e-mail, it has in the body of the e-mail --
2 and this is in BellSouth's discovery to AT&T; I'm not sure if
3 that particular document is in the record, but we may need to
4 insert it -- it has something to the -- and I don't have it in
5 front of me, but something to the effect of attached is the
6 language to deal with the switched access/VOIP, or it might
7 even just say VOIP issue that we discussed, I think, yesterday
8 is what the e-mail says. So that is the context and the reason
9 that we proposed that to them.
10 COMMISSIONER DAVIDSON: So is it BellSouth's position
11 that but for that VOIP dispute, there would have been no reason
12 to include this switched access traffic language?
13 THE WITNESS: Correct.
14 COMMISSIONER DAVIDSON: You had mentioned that in
15 other cases that BellSouth and the other party to the
16 interconnection agreement didn't have the same type of dispute
17 regarding VOIP that is existing with AT&T.
18 THE WITNESS: Correct.
19 COMMISSIONER DAVIDSON: My question there, I'd like
20 to direct you to Exhibit 26 which is -- I think you were
21 provided that. That's the March 14th filing with the Public
22 Service Commission of the Auglink interconnection agreement.
23 And if you look at Section 5.3.10 appearing on Page 5 of 70 as
24 noted there, or obviously there aren't 70 pages, at least I
25 don't think there are, that agreement contains a provision on

1 switched access traffic. And I think I recall you testifying
2 earlier that the VOIP dispute that exists with AT&T didn't
3 exist with Auglink. Nonetheless, there is still a paragraph
4 included on switched access traffic. And if you could, help me
5 understand why there is a specific paragraph there on switched
6 access traffic.
7 THE WITNESS: Sure. And again, it's to actually
8 address the same issue, and perhaps I shouldn't have said if
9 there was no dispute. It was rather if there was no -- well,
10 to address that issue. In this definition of switched access
11 traffic, if you read midway through it says, "Additionally, any
12 public switched telephone network interexchange
13 telecommunications traffic regardless of transport protocol
14 method," and then it goes on to talk. Regardless of transport
15 protocol method means the same thing in the industry as -- or
16 the voice over IP is a subset of that. It is a transport
17 protocol method. So again, this switched access traffic
18 definition in this agreement just as in the AT&T agreement is
19 included to address the fact that voice over IP transmissions
20 are going to be handled a certain way.
21 In this particular agreement, the party agreed with
22 BellSouth that they would be handled as switched access. In
23 the AT&T agreement, AT&T did not agree with BellSouth, and so
24 we had the sentence about the parties are unable to agree and
25 then how we handled it. But again, the switched access traffic

1 definition was inserted to either, in the case of Auglink,
2 include as switched access voice over IP or, in the case of
3 AT&T, leave open for disagreement the issue of voice over IP.
4 But there is no reason other than that voice over IP or
5 transport protocol method issue that you would need a switched
6 access traffic definition in a local interconnection agreement.
7 COMMISSIONER DEASON: Redirect.
8 MR. SHORE: No, sir. The only request I'd make -- I
9 don't know if now is the appropriate time since I don't have
10 any questions, maybe it is, is to move Ms. Shiroishi's exhibit.
11 I think it was identified as Exhibit 25 into the record.
12 COMMISSIONER DEASON: Without objection, show that
13 Exhibit 25 is admitted.
14 (Exhibit 25 admitted into the record.)
15 MS. CECIL: Yes. We'd also like to move Exhibit 26
16 into the record.
17 COMMISSIONER DEASON: Without objection, show that
18 Exhibit 26 is admitted.
19 (Exhibit 26 admitted into the record.)
20 MS. CECIL: And also 27.
21 COMMISSIONER DEASON: Without objection, show that
22 Exhibit 27 is admitted.
23 (Exhibit 27 admitted into the record.)
24 COMMISSIONER DEASON: That concludes the last
25 witness.

(Witness excused.)

COMMISSIONER DEASON: Staff, is there anything else to come before the Commission before we adjourn?

MS. CHRISTENSEN: No. I believe we're --

COMMISSIONER DEASON: Can we review the schedule?

MS. CHRISTENSEN: Yes. My schedule is showing briefs are due, I believe, on June 23rd. I have a handwritten copy of this, so --

COMMISSIONER DEASON: June the 23rd. Do the parties agree that that's the brief due date?

MS. CHRISTENSEN: Let me double-check my order establishing procedure and I'll get that clarified. Yeah, it says June 23rd is the brief filing date.

COMMISSIONER DEASON: All right. Anything further from any of the parties?

MR. SHORE: Not from BellSouth.

MS. CECIL: Not from AT&T.

COMMISSIONER DEASON: Thank you for your very thorough presentation and participation. This hearing is adjourned.

(Hearing concluded at 5:13 p.m.)

- - - - -

STATE OF FLORIDA)

: CERTIFICATE OF REPORTER

COUNTY OF LEON)

I, TRICIA DeMARTE, RPR, Official Commission Reporter, do hereby certify that the foregoing proceeding was heard at the time and place herein stated.

IT IS FURTHER CERTIFIED that I stenographically reported the said proceedings; that the same has been transcribed under my direct supervision; and that this transcript constitutes a true transcription of my notes of said proceedings.

I FURTHER CERTIFY that I am not a relative, employee, attorney or counsel of any of the parties, nor am I a relative or employee of any of the parties' attorneys or counsel connected with the action, nor am I financially interested in the action.

DATED THIS 20th DAY OF MAY, 2003.

Tricia DeMarte

TRICIA DeMARTE, RPR
FPSC Official Commission Reporter
(850) 413-6736

EXHIBIT NO. 1

DOCKET NO.: 020919-TP

WITNESS: STIP-1

PARTY: BELLSOUTH

DESCRIPTION:

1. BellSouth Responses to Staff's 1st Interrogatories, p. 1

PROFFERING PARTY: STAFF

I.D. # Stip-1

FLORIDA PUBLIC SERVICE COMMISSION
DOCKET NO. 020919-TP EXHIBIT NO. 1
COMPANY/ WITNESS: BellSouth/Stip-1
DATE: 5-07-03

REQUEST: Please refer to the Direct Testimony of Beth Shiroishi, Page 3, Lines 20 through 22, where she states that "[t]he Parties entered into a Confidential Settlement that addresses the treatment of reciprocal compensation and switched access traffic through July 1, 2001." Under the terms of that settlement agreement, what types of intraLATA traffic are treated as switched access traffic for purposes of compensation?

RESPONSE: The Confidential Settlement addressed the treatment of reciprocal compensation and switched access traffic in terms of settling issues between AT&T and BellSouth related to dial-up ISP-bound Traffic. The Parties agreed to release each other from all claims associated with reciprocal compensation and switched access traffic through June 13, 2001. The statement referenced in the Interrogatory above simply indicates that the issues associated with the treatment of reciprocal compensation and switched access traffic were settled in a Confidential Settlement, which does not address the specific language issues brought forth in this Complaint.

RESPONSE PROVIDED BY: Elizabeth R. A. Shiroishi

REQUEST: Please refer to the Direct Testimony of Beth Shiroishi, Page 11, Lines 21 through 23, where she cites Section 5.3.1 of the Interconnection Agreement.

a) Please provide specific examples of traffic that has traditionally been treated as intraLATA toll traffic that is not included in BellSouth's Florida Intrastate access tariff.

b) Please list all types of traffic that is originated or terminated through switched access arrangements as established by the state commission or FCC that is not listed in BellSouth's Florida Intrastate Access Tariff.

RESPONSE: a.) None.

b.) Interstate switched access arrangements are established by the FCC. Intrastate switched access arrangements are established by the state commissions in the applicable tariffs. Switched access arrangements established by the FCC would not be listed in BellSouth's Florida Intrastate Access Tariff. Therefore, Traffic that is originated or terminated over such interstate switched access arrangements would not be listed in the BellSouth Florida Intrastate Tariff.

RESPONSE PROVIDED BY: Elizabeth R. A. Shiroishi

REQUEST: Please refer to the Rebuttal Testimony of Beth Shiroishi, Page 2, Lines 6 through 8, where she states that the term switched access arrangements is not the same as the specifically defined term "Switched Access Traffic."

a) Please define the term "switched access arrangement."

b) In what way is a switched access arrangement different from switched access traffic?

RESPONSE: a.) The term "switched access arrangement" refers to the facilities used to provide services that are differentiated by their technical characteristics and the manner in which an end user accesses them in originating calling. Such arrangements include, but are not limited to, Switched Access Feature Group A, B, C, and D. See Section E.6.1 of the BellSouth Florida Intrastate Tariff and the FCC Tariff No. 1.

b.) The Interconnection Agreement expressly excludes intraLATA calls carried over "switched access arrangements" from the definition of "Local Traffic." Such intraLATA calls that originate or terminate through switched access arrangements are governed by BellSouth switched access tariffs and are subject to the rates set forth in the intrastate access tariff. The term "Switched Access Traffic" is specifically defined in the Interconnection Agreement and the specific definition of the term was inserted to address Voice over Internet Protocol traffic.

RESPONSE PROVIDED BY: Elizabeth R. A. Shiroishi

REQUEST: Please refer to the Rebuttal Testimony of Beth Shiroishi, Page 2, Lines 21 through 23, where she states that "in the agreement that governs the parties' relationship in Mississippi, the Parties agreed that all calls in the LATA would be considered local." Was this portion of the Mississippi agreement the result of negotiation or an arbitration?

RESPONSE: The entire Mississippi interconnection agreement between BellSouth and AT&T, including the definition of local traffic, is the result of negotiation. The parties did not arbitrate in Mississippi.

RESPONSE PROVIDED BY: Elizabeth R. A. Shiroishi

REQUEST: Please refer to Section 5.3.1.1 of your Second Interconnection Agreement with AT&T. Is intraLATA toll traffic a "switched access arrangement established by the State Commission or FCC?" Explain your answer.

RESPONSE: Please see Interrogatory No. 3(a) for the definition of a "switched access arrangement." Pursuant to the Interconnection Agreement, intraLATA traffic that originates or terminates through switched access arrangements would be governed by the BellSouth switched access tariffs and would be subject to the appropriate switched access tariff rates. Switched access arrangements are physical facilities or trunk groups versus "traffic" that is actual usage, or "minutes of use." The Parties agreed that the jurisdiction of minutes and compensation thereof would be determined by what arrangement the "traffic" traverses.

RESPONSE PROVIDED BY: Elizabeth R. A. Shiroishi

REQUEST: a) Does "traffic that has traditionally been treated as intraLATA toll traffic" fall under the definition of "switched access arrangements as established by the State Commission or FCC?"

b) If your response to a) is negative, please explain what specifically differentiates the traffic.

c) If your response to a) is negative, cite specific examples that do not fall under the definition of switched access arrangements.

RESPONSE: a) As stated in Item No. 3(a), "switched access arrangements" are facilities, not types of traffic, (i.e. minutes of use). Therefore, pursuant to the definition of Local Traffic set forth in the Interconnection Agreement, traffic that was traditionally treated as intraLATA toll traffic, i.e. traffic that originates and terminates in different Local Calling Areas or exchanges as defined by the applicable intrastate tariff, will not be considered "Local Traffic" **except for those intraLATA calls that originate or terminate through switched access arrangements.**

Therefore, if an intraLATA call originates and terminates in different Local Calling Areas or exchanges and either originates or terminates through switched access arrangements, then such call would not be considered Local Traffic. If an intraLATA call originates and terminates through a local/toll arrangement, then the call would be considered Local.

RESPONSE PROVIDED BY: Elizabeth R. A. Shiroishi

REQUEST: Please answer each of the following as it pertains to your Second Interconnection Agreement with AT&T.

a) Are switched access arrangements a subset of switched access traffic? If your response is affirmative, please give an example of switched access traffic that is not also a switched access arrangement.

b) Is switched access traffic a subset of switched access arrangements? If your response is affirmative, please give an example of a switched access arrangement that is not also switched access traffic.

RESPONSE: a) and b) Switched Access Traffic and switched access arrangements are not "subsets" of each other. As stated in Item 3(a), "switched access arrangements" are facilities used to provide technical services, such as Feature Group A, B, C, and D. Such services can be used for the origination and/or termination of either intraLATA or interLATA traffic. In the Interconnection Agreement, intraLATA calls that utilize Feature Group A, B, C, D or any other "switched access arrangement" are excluded from the definition of Local Traffic and are therefore subject to switched access rates.

RESPONSE PROVIDED BY: Elizabeth R. A. Shiroishi

EXHIBIT NO. 2

DOCKET NO.: 020919-TP

WITNESS: STIP-2

PARTY: AT&T

DESCRIPTION:

1. AT&T Responses to Staff's 1st Interrogatories, p. 2.

2. AT&T Responses to Staff's 1st Request for Production of Documents, p. 7.

PROFFERING PARTY: STAFF

I.D. # Stip-2

FLORIDA PUBLIC SERVICE COMMISSION
DOCKET NO. 020919-TP EXHIBIT NO 2
COMPANY/ WITNESS. AT+T- Stip-2
DATE: 5-07-03

BEFORE THE FLORIDA PUBLIC SERVICE COMMISSION

In Re: Request for Arbitration Concerning Complaint of AT&T Communications of the Southern States, LLC, Teleport Communications Group, Inc., and TCG South Florida for Enforcement of Interconnection Agreements with BellSouth Telecommunications, Inc.	)	**DOCKET NO. 020919-TP**

AT&T COMMUNICATIONS OF THE SOUTHERN STATES, LLC RESPONSE TO STAFF'S FIRST SET OF INTERROGATORIES (1, 2) AND FIRST REQUEST FOR PRODUCTION OF DOCUMENTS (1, 2)

Pursuant to Rule 28-106.206, Florida Administrative Code, Rules 1.340 and 1.280, and the Florida Rules of Civil Procedure, AT&T Communications of the Southern States, LLC, Teleport Communications Group, Inc., and TCG South Florida (collectively "AT&T") hereby files the following Responses to Staff's First Set of Interrogatories and First Request for Production of Documents dated April 8, 2003.

Respectfully submitted this 28th day of April, 2003.

By: _____

Loretta A. Cecil, Esq.
FL Bar No. 358983
Womble Carlyle Sandridge & Rice, PLLC
Suite 3500
1201 West Peachtree Street
Atlanta, GA 30309
Attorney for AT&T Communications of the Southern States, LLC, Teleport Communications Group, Inc. and TCG South Florida

1. Please refer to the Direct Testimony of Jeffrey King, Page 3, Lines 13 through 16, where he states that "Instead of charging AT&T local reciprocal compensation rates for such traffic, BellSouth has charged AT&T intrastate switched access rates for the transport and termination of certain 'Local Traffic', including certain 'LATAwide Traffic'."

   a) What is the certain "Local Traffic" referred to in that portion of the testimony? Give specific examples.

   b) What is the certain "LATAwide Traffic" referred to in that portion of the testimony? Give specific examples.

RESPONSE: (A) The certain "Local Traffic" referred to are local calls (excluding ISP calls and Voice over Internet Protocol calling) terminating over trunk groups that have been provisioned to also support terminating switched access traffic. An example is AT&T's "Nodal Services," such as AT&T Digital Link, which use AT&T's "traditional" AT&T 4ESS™ long distance switches and network to support its customers' "Local Traffic". Other AT&T "Nodal Services" provide AT&T's customer with dedicated 1+ intraLATA services.

(B) As defined in Section 5.3.1.1 of Attachment 3 to the Interconnection Agreement, the Parties agreed "... to apply a "LATAwide" local concept, meaning that traffic that has been traditionally treated as intraLATA toll would now be treated as local for intercarrier compensation, except for those calls that are originated or terminated through switched access arrangements as established by the State Commission or FCC".

Specifically, a 1+ intraLATA call from an AT&T local customer would qualify under the Interconnection Agreement as "Local Traffic." After the Interconnection Agreement was executed and AT&T increased its "Percent Local Usage" reporting factor to BellSouth to account for such local 1+ intraLATA calls, BellSouth refused to accept the updated "Precent Local Usage" factor and instead continued to treat these intraLATA calls as switched access calls. Another example is AT&T local customers being served by AT&T using UNE-P (UNE Platform – a facilities-based local option leasing BellSouth's

unbundled network elements). Due to AT&T's current system capabilities, AT&T routes its 1+ calls (intraLATA and interLATA calls) over its traditional long distance network. However, because AT&T is using its traditional switched access network to terminate 1+ intraLATA local calls to a BellSouth end user, BellSouth erroneously claims that such calls are not "Local Traffic."

Regarding all of the foregoing, see Rebuttal Testimony of Jeffrey A. King (at Pages 12-16) filed on March 14, 2003.

PROVIDED BY: Jeffrey A. King
Director
Local Services Access Management Organization
1200 Peachtree Street
12th Floor
Atlanta, GA 30309

2. a) Do any states or the FCC define as switched access traffic any types of traffic that are not included under section 5.3.3?

   b) If your response is affirmative, please list the traffic and its treatment by state or the FCC.

RESPONSE: (A) Under Section 5.3.3 of the Interconnection Agreement, "Switched Access Traffic" includes and specifically is limited to intrastate interLATA and interstate interLATA traffic. Under Section 5.3.1.1 of the Interconnection Agreement, the Parties agreed to adopt a "LATAwide local concept" for purposes of determining "Local Traffic," except for calls that are exchanged over "switched access arrangements as established by the State Commission or FCC." Because Section 5.3.3 also states that it [Section 5.3.3] is "interrelated" to Section 5.3.1.1, the states and the FCC would be limited to declaring only intrastate interLATA and interstate interLATA traffic as switched access traffic under the Interconnection Agreement under the language "switched access arrangements as established by the State Commission or FCC."

(B) To date, complaints are pending before the North Carolina Utilities Commission and the Florida Public Service Commission interpreting Sections 5.3.3. and 5.3.1.1 of the Interconnection Agreement. No decision has been issued by either state.

PROVIDED BY: Jeffrey A. King
Director
Local Services Access Management Organization
1200 Peachtree Street
12th Floor
Atlanta, GA 30309

1. Please provide copies of any orders that pertain to the issue of LATAwide traffic from your most recent arbitration with BellSouth in North Carolina.

RESPONSE: In the most recent arbitration case in North Carolina, P-140, Sub 73 and P-645, Sub 7, the issue of whether traditional intraLATA or "LATAwide" traffic constituted "Local Traffic" was not an "arbitrated" issue. Therefore, the North Carolina Utilities Commission's most recent arbitration order between AT&T and BellSouth does not contain findings relative to traditional intraLATA or "LATAwide" traffic.

However, the same complaint as is pending in this Docket has been filed by AT&T against BellSouth in North Carolina (Docket No. P-55, Sub 1376). The North Carolina Utilities Commission has not issued its decision in this Docket. However, attached are AT&T's and BellSouth's Briefs filed in this docket on April 4, 2003.

PROVIDED BY: Jeffrey A. King
Director
Local Services Access Management Organization
1200 Peachtree Street
12th Floor
Atlanta, GA 30309

2. For any states listed in your response to Interrogatory 2(b), please provide the pertinent orders.

RESPONSE: There are no responsive documents.

PROVIDED BY: Jeffrey A. King
Director
Local Services Access Management Organization
1200 Peachtree Street
12th Floor
Atlanta, GA 30309

1. Please provide copies of any orders that pertain to the issue of LATAwide traffic from your most recent arbitration with BellSouth in North Carolina.

RESPONSE: In the most recent arbitration case in North Carolina, P-140, Sub 73 and P-645, Sub 7, the issue of whether traditional intraLATA or "LATAwide" traffic constituted "Local Traffic" was not an "arbitrated" issue. Therefore, the North Carolina Utilities Commission's most recent arbitration order between AT&T and BellSouth does not contain findings relative to traditional intraLATA or "LATAwide" traffic.

However, the same complaint as is pending in this Docket has been filed by AT&T against BellSouth in North Carolina (Docket No. P-55, Sub 1376). The North Carolina Utilities Commission has not issued its decision in this Docket. However, attached are AT&T's and BellSouth's Briefs filed in this docket on April 4, 2003.

PROVIDED BY: Jeffrey A. King
Director
Local Services Access Management Organization
1200 Peachtree Street
12th Floor
Atlanta, GA 30309

2. For any states listed in your response to Interrogatory 2(b), please provide the pertinent orders.

RESPONSE: There are no responsive documents.

PROVIDED BY: Jeffrey A. King
Director
Local Services Access Management Organization
1200 Peachtree Street
12th Floor
Atlanta, GA 30309

AT&T RESPONSE TO BELLSOUTH 1st REQUEST FOR PRODUCTION OF DOCUMENTS POD No. 1

WOMBLE
CARLYLE
SANDRIDGE
& RICE
A PROFESSIONAL LIMITED
LIABILITY COMPANY

150 Fayetteville Street Mall, Suite 2100
Raleigh, NC 27601
Mailing Address:
Post Office Box 831
Raleigh, NC 27602
Telephone: (919) 755-2100
Fax: (919) 755-2150
Web site: www.wcsr.com

Loretta A. Cecil
Direct Dial: (404) 888-7387
Direct Fax: (404) 870-4826
E-mail: lcecil@wcsr.com

April 4, 2003

FILED
APR 04 2003
Clerk's Office
N.C. Utilities Commission

VIA HAND DELIVERY

Ms. Geneva Thigpen, Chief Clerk
North Carolina Utilities Commission
430 North Salisbury Street
Raleigh, North Carolina 27601

Re: In the Matter of: AT&T Communications of the Southern States, LLC, Teleport Communications Group, Inc., and TCG of the Carolinas, Inc., Complainants v. BellSouth Telecommunications, Inc., Respondent
Docket No. P-55, Sub 1376

Dear Mrs. Thigpen:

Please find enclosed for filing in your office the original and thirty-one (31) copies of AT&T's Brief on behalf of AT&T Communications of the Southern States, LLC, Teleport Communications Group, Inc., and TCG of the Carolinas, Inc.

Please stamp two (2) copies of the Brief in the usual manner and return to us via our courier.

If you have any questions, please do not hesitate to contact me at 404-888-7437.

Sincerely yours,

Loretta A. Cecil/jpm

Loretta A. Cecil

Enclosure(s)

10

FILED
APR 04 2003
Clerk's Office
N.C. Utilities Commission

STATE OF NORTH CAROLINA UTILITIES COMMISSION
RALEIGH

Docket No. P-55, Sub 1376

BEFORE THE NORTH CAROLINA UTILITIES COMMISSION

In Re: AT&T Communications of the Southern States, LLC, Teleport Communications Group, Inc. and TCG of the Carolinas, Inc. For Enforcement of Interconnection Agreements with BellSouth Telecommunications, Inc.	))))))))	**BRIEF OF AT&T**

BRIEF OF AT&T OF THE SOUTHERN STATES, LLC, TELEPORT COMMUNICATIONS GROUP, INC., AND TCG OF THE CAROLINAS, INC.

TABLE OF CONTENTS

INTRODUCTION 1

ARGUMENT 9

1. The Definitions of "Local Traffic" and "Switched Access Traffic" Are Specifically "Interrelated" In Interconnection Agreement And Thus Clearly Include "Traditional" IntraLATA Toll Traffic As "Local Traffic." 9

   A. Georgia Law Requires The Commission To Consider All Of The Provisions Of The Interconnection Agreement And Not Just "Isolated" Provisions In Constructing The Contract. 11

   B. BellSouth's Argument That IntraLATA Traffic, By Definition, Can Never Be Considered InterLATA Traffic For Compensation Purposes Is Inconsistent With BellSouth's Prior Advocacy 13

   C. In Considering BellSouth's "Extrinsic" Or Parol Evidence, Such Evidence May Not "Add to," Take From, Or "Vary" The Provisions Of The Interconnection Agreement. 15

2. The "Extrinsic" or Parol Evidence Provided By AT&T Overwhelmingly Establishes That The Parties Intended That "Local Traffic" Would Include "Traditional" IntraLATA Toll Traffic For Purposes of Reciprocal Compensation; BellSouth's Testimony Regarding the Same Is Not Credible. 17

   A. BellSouth's Testimony. 18

      1. The Shiroishi Testimony. 19

   B. AT&T Testimony. 21

      1. The Peacock Testimony. 22
      2. The Stevens Testimony. 30
      3. The King Testimony. 39

12

3. The "Red-Lined" Versions of the Interconnection Agreement Supports The Peacock, Stevens and King Testimony And Not The Shiroishi Testimony. 45

4. BellSouth's "Extrinsic" or Parol Evidence Fails The Logic Test. 59

A. BellSouth Already Had Agreed To A LATAwide Definition of "Local Traffic" In Its Mississippi Interconnection Agreement with AT&T. 59

B. BellSouth Would Have The Commission Believe That AT&T Would Not Have Arbitrated The Definition of "Local Traffic." 64

C. BellSouth's Logic Also Assumes AT&T Would Have Agreed To An Exclusion For "Local Traffic" Which "Swallows the Whole." 65

D. BellSouth's Allegation That The "Interrelated" Language of Section 5.3.1.1 Relates Only To VOIP Calls Is Based On A Faulty And Illogical Interpretation Of the "Pick and Choose" Rule. 61

E. BellSouth's Argument That Other CLP's Have The Same Definition of "Local Traffic," But Yet Have Not Claimed "Local Traffic" Includes All LATAwide Traffic Also Is Based On Faulty Logic. 78

F. BellSouth's Logic That AT&T Agreed to "Convert" or "Migrate" Its Existing Network Architecture to "Local Interconnection Trunks" In Order to Have Its Traffic Transported And Terminated As "Local Traffic" Also Is Faulty. 79

G. The Reason BellSouth Proposes Its Interpretation of "Switched Access Arrangements" Is to Gain A Competitive Advantage Over AT&T In The Local Telephone Market. 84

CONCLUSION 88

13

STATE OF NORTH CAROLINA UTILITIES COMMISSION
RALEIGH

Docket No. P-55, Sub 1376

BEFORE THE NORTH CAROLINA UTILITIES COMMISSION

In Re: AT&T Communications of the Southern States, LLC, Teleport Communications Group, Inc. and TCG of the Carolinas, Inc. For Enforcement of Interconnection Agreements with BellSouth Telecommunications, Inc.	))))))))	**BRIEF OF AT&T**

BRIEF OF AT&T OF THE SOUTHERN STATES, LLC, TELEPORT COMMUNICATIONS GROUP, INC., AND TCG OF THE CAROLINAS, INC.

COMES NOW AT&T of the Southern States, LLC, Teleport Communications Group, Inc., and TCG of the Carolinas, Inc. (collectively "AT&T") and hereby file this Brief in the above referenced proceeding.

INTRODUCTION

AT&T's complaint alleges a "straightforward" breach of contract claim which can, and should, be resolved based on the literal and unambiguous provisions of the interconnection agreement executed between AT&T and BellSouth on July 19, 2001 ("Interconnection Agreement").[1] The subject of

[1] Technically, there are two interconnection agreements at issue in this proceeding. The first interconnection agreement was executed by AT&T and BellSouth and approved by the Commission on May 12, 1997 in Docket No. P-140, Sub 50. First Interconnection Agreement was effective April 28, 1997 and was set to expire three years from its effective date of April 28, 1997, or April 28, 2000. However, there was a "retroactivity" provision included in Section 2.3 of First Interconnection Agreement ("Retroactivity Provision") which provided that in the event First Interconnection Agreement expired before AT&T and BellSouth had executed another "follow-on" or "second" interconnection agreement, or

the complaint relates to compensation paid by AT&T to BellSouth for the exchange of certain traffic between the Parties.

As the Commission is aware, when an AT&T local customer calls a BellSouth local customer, BellSouth is entitled to receive compensation from AT&T because the call is transported and terminated using BellSouth's network. There generally are two compensation rates which apply to the termination of such calls. The first rate is known as a reciprocal compensation rate which applies to the termination of all "local" calls; the second rate is referred to as a switched access rate which applies to all "switched access" calls. Reciprocal compensation rates are established by State Commissions pursuant to Sections 251(c) and 252(d) of the Act. Switched access rates are filed in tariffs and approved by (1) State Commissions for intrastate switched access, and (2) the Federal Communications Commission ("FCC") for interstate switched access. Generally, switched access rates are higher than reciprocal compensation rates.

In the Parties' July 19, 2001 Interconnection Agreement, they agreed to adopt a "LATAwide local concept" for purposes of "Local Traffic," meaning

---

before the Commission had issued its arbitration order in a "follow-on" or "second" arbitration, that the terms subsequently agreed to by the Parties or so ordered by the Commission in any "follow-on" or "second" arbitration, would be "retroactive" to the day following expiration of First Interconnection Agreement. Subsequently, a "second" interconnection agreement was executed by AT&T and BellSouth and approved by the Commission on August 21, 2001 in Docket No. P-140, Sub 73 and P-646, Sub 7 pursuant to Section 252 of the Telecommunications Act of 1996. Pub. L. No. 104-104, 110 Stat. 56 (1996) ("Act").

that all calls within a "local access transport area" or "LATA" which traditionally had been compensated at a higher switched access rate would be compensated at lower reciprocal compensation rate, except for calls that originated or terminated through "switched access arrangements" as established by the State Commission or the FCC.

There are seven (7) LATAs in North Carolina. Therefore, when AT&T and BellSouth agreed that "Local Traffic" would include all traditional "LATAwide" calls, the Parties agreed that if an AT&T local customer in the Greensboro LATA called a BellSouth local customer in the same Greensboro LATA, BellSouth would charge AT&T at the applicable reciprocal compensation rate for transporting and terminating that local call. [Vol. 1, Tr. 69] Because such calls stay "within the LATA," they are referred to as "intraLATA" calls.

However, for calls that transported and terminated from one LATA to another, the Parties agreed that BellSouth would charge AT&T at the applicable switched access rate for transporting and terminating that interLATA call. For example, if that same AT&T local customer in the Greensboro LATA called a different BellSouth local customer in the Charlotte LATA, BellSouth would charge AT&T at the switched access rate. [Id.] Because such calls are transported and terminated from one LATA to another LATA, they are referred to as "interLATA" calls.

Notwithstanding the unambiguous provisions of the Interconnection Agreement, after the contract was executed BellSouth refused to charge AT&T the reciprocal compensation rate for transporting and terminating all such "LATAwide" calls. [Vol. 1 Tr. 45-46] Instead, for some traditional intraLATA calls, BellSouth has charged, and continues to charge, AT&T at the higher switched access rate to terminate these calls. This is a clear breach of the Interconnection Agreement. [Vol. 1 Tr. 36]

BellSouth's breach is based on its improper interpretation of the contract. First, in implementing the Interconnection Agreement, BellSouth has taken out of context language regarding "switched access arrangements" set forth in Section 5.3.3.1 of Attachment 3. [Vol. 1, Tr. 40] Second, BellSouth completely ignores the definition of "Switched Access Traffic" set forth in Section 5.3.3 of the same Attachment 3, which applies to, and thus governs, "switched access arrangements." [Vol. 1, Tr. 42-43]

The specific language which BellSouth takes out of context in Section 5.3.1.1 of Attachment 3 is highlighted below:

> 5.3.1.1 For the treatment of local and ISP-bound traffic in this Agreement, the Parties agree to implement the FCC's Order on Remand and Report and Order in CC Docket No. 96-98 and 99-68 released April 27, 2001 ("ISP Order on Remand"). The Parties further agree to amend this agreement, within sixty (60) days of execution, to incorporate language reflecting the FCC ISP Order on Remand. At such time as that amendment is finalized, the Parties agree to work cooperatively to "true-up"

compensation amounts consistent with the terms of the amended language from the effective date of the FCC ISP Order on Remand to the date the amendment is finalized. The Parties do not agree on the rates to apply to ISP-bound traffic between the end of the term of the preceding Interconnection Agreement and June 14, 2001, the effective date of the FCC's ISP Order on Remand. In this Section, the Parties express their intent to file negotiated language to incorporate the FCC's ISP Order on Remand. If the Parties are unable to agree on this language addressing this issue by the time the language is due to be filed, the Parties will file their respective proposed language with the appropriate Commission for resolution. Until final contract language is agreed upon or ordered, the Parties agree not to re-rate or bill each other for ISP-bound calls between the end of the term of the previous interconnection agreement and June 14, 2001. ***Additionally, the Parties agree to apply a "LATAwide" local concept to this Attachment 3, meaning that traffic that has been traditionally been treated as intraLATA toll traffic will now be treated as local for intercarrier compensation purposes, except for those calls that are originated or terminated through switched access arrangements as established by the State Commission or FCC.***

Similarly, the language which BellSouth ignores in Section 5.3.3 of Attachment 3 also is highlighted below:

5.3.3 ***<u>Switched Access Traffic</u>. Switched Access Traffic is defined as telephone calls requiring local transmission or switching services for the purpose of the origination or termination of Intrastate InterLATA and Interstate InterLATA traffic. Switched***

> ***Access Traffic includes, but is not limited to, the following types of traffic: Feature Group A, Feature Group B, Feature Group D, toll free access (e.g., 800/877/888), 900 access, and their successors.*** Additionally, if BellSouth or AT&T is the other Party's end user's presubscribed interexchange carrier or if any end-users uses BellSouth or AT&T as an interexchange carrier on a 101XXXX basis, BellSouth or AT&T will charge the other Party the appropriate tariff charges for originating switched access services. The Parties have been unable to agree as to whether Voice over Internet Protocol ("VOIP") transmissions which cross local calling area boundaries constitute Switched Access Traffic. Notwithstanding the foregoing, and without waiving any rights with respect to either Party's position as to the jurisdictional nature of VOIP, the Parties agree to abide by any effective and applicable FCC rules and orders regarding the nature of such traffic; if any; provided however, that any VOIP transmission which originates in one LATA and terminates in another LATA (i.e. the end-to-end points of the call), shall not be compensated as Local Traffic. ***This Section is interrelated to Section 5.3.1.1.***

In reviewing Section 5.3.1.1, there is no dispute that the Parties agreed to apply a "LATAwide" local concept, meaning that traffic which traditionally has been treated as intraLATA or "LATAwide" toll traffic would be treated as "Local Traffic," except for those calls that are originated or terminated through "switched access arrangements" as established by the State Commission or FCC. [Vol. 2, Tr. 34]

With respect to such "switched access arrangements," in Section 5.3.3 the Parties defined "Switched Access Traffic," to which, by definition, the

switched access rate would apply. The definition of "Switched Access Traffic," as defined in Section 5.3.3, clearly governs what constitute "switched access arrangements" in Section 5.3.1.1. [Vol. 1, Tr. 43-45] This is apparent from the language found at the end of Section 5.3.3. This language states "[t]his Section [Section 5.3.3] is interrelated to Section 5.3.1.1." Thus, when these two "interrelated" Sections of the Interconnection Agreement are read together, the language in 5.3.1.1 which states "except for those calls originated or terminated through switched access arrangements as established by the State Commission or FCC" tracks perfectly with the definition of "Switched Access Traffic" found in 5.3.3. This is because a State Commission has jurisdiction over "intrastate interLATA" calls and the FCC has jurisdiction over "interstate interLATA" calls. [Vol. 1, Tr. 40-45]

BellSouth does not rely upon any language in the Interconnection Agreement to conclude that "switched access arrangements" means that traffic that is subject to the Parties' switched access tariffs. [Vol. 1, Tr. 45; Vol. 3, Tr. 12-13] Instead, BellSouth's Ms. Shiroishi stated that the parties only "discussed" the fact that "switched access arrangements" are offered through each party's switched access tariff.[2] [Vol. 1, Tr. 37] However, two

[2] Regarding Ms. Shiroishi's "discussions" and other "extrinsic" or parol evidence offered by BellSouth, on December 30, 2002, AT&T filed its Motion To Strike BellSouth's "Extrinsic" Testimony, Or In The Alternative, Motion For Additional Time To Conduct Discovery. Although on January 7, 2003, the Commission denied AT&T's Motion To Strike, the Commission allowed AT&T to take expedited discovery in this proceeding. Thereafter, on January 21, 2003, AT&T filed its Renewed Motion To Strike BellSouth's "Extrinsic"

(2) AT&T witnesses who were present during the negotiations testified that at no time did Ms. Shiroishi make such statements, or similar statements, before the Interconnection Agreement was executed by the Parties on July 19, 2001. [Vol. 1, Tr. 121-124; 176-185] Had Ms. Shiroishi made such statements, AT&T's witnesses testified that AT&T would not have agreed to the "switched access arrangements" language" set forth in Section 5.3.1.1, but instead would have arbitrated the definition of "Local Traffic." [Vol. 1, Tr. 53; 182]

Moreover, contrary to Ms. Shiroishi's Testimony, AT&T's witnesses testified that Ms. Shiroishi advised AT&T that BellSouth required the "switched access arrangements" language in order to "protect" BellSouth in the event a State Commission or the FCC subsequently determined that calls to internet service providers ("ISP's") were jurisdictionally interLATA (even though such calls originated or terminated within the LATA), and to ensure that voice over internet protocol" ("VOIP") calls also were not included in the definition of "LATAwide" local traffic in the event the FCC determined such calls constituted interLATA traffic. [Vol. 1, Tr. 55; 177-178]

BellSouth's Ms. Shiroishi also implied that AT&T was obligated to "migrate" or "convert" its existing network to "local only" interconnection

---

Testimony and Supporting Brief. This Motion also was denied by the Commission on January 22, 2003. Although AT&T continues to object to BellSouth's "extrinsic" or parol evidence, it will not repeat its objections and arguments regarding the same in this Brief. Instead, AT&T incorporates by this reference its two prior Motions To Strike BellSouth's "Extrinsic" or Parol Testimony and Supporting Brief.

trunks in order to have its "Local Traffic" billed at the reciprocal compensation rate under the Interconnection Agreement. [Vol. 2, Tr. 41-42] Importantly, there is no such requirement in the contract. Moreover, had BellSouth proposed that AT&T do the same, it would have meant a major network reconfiguration for AT&T—something AT&T's witnesses testified AT&T never would have accepted. [Vol. 1 , Tr. 61-65; 188]

Accordingly, AT&T's complaint asks the Commission to declare BellSouth in breach of the Interconnection Agreement and to order BellSouth: (1) issue a credit to AT&T in the amount of $2,558,144M for the period July 1, 2001 through October 31, 2002; (2) issue a credit to AT&T representing interest at the rate of 1 and ½ percent (1½%) per month on the credit amount as allowed under the terms of the Interconnection Agreement from July 1, 2001 until such credit is paid; and (3) charge AT&T from November 1, 2002 going forward at the reciprocal compensation rate for the transport and termination of all traditional LATAwide traffic.

ARGUMENT

1. The Definitions Of "Local Traffic" And "Switched Access Traffic" Are Specifically "Interrelated" In Interconnection Agreement And Thus Clearly Include "Traditional" IntraLATA Toll Traffic As "Local Traffic."

With respect to BellSouth's obligation to charge AT&T the appropriate reciprocal compensation rate for the transport and termination of "Local Traffic," as discussed above, Section 5.3.1.1 of Attachment 3 of Second Interconnection Agreement provides:

> . . . the Parties agree to apply a "LATAwide" local concept to this Attachment 3, meaning that traffic that has traditionally been treated as intraLATA toll traffic will now be treated as local for intercarrier compensation purposes, except those calls that are originated or terminated through switched access arrangements as established by the State Commission or FCC.

Regarding the language "except those calls that are originated or terminated through switched access arrangements as established by the State Commission or FCC," the Parties qualified the same by agreeing to a definition of "Switched Access Traffic" in Section 5.3.3 of Attachment 3 that specifically "interrelated" this definition to what constituted "Local Traffic" as used in Section 5.3.1.1 of the same Attachment 3. [Vol. 1, Tr. 42-43] Again, Section 5.3.3 provides that "Switched Access Traffic" is defined as:

> . . . telephone calls requiring local transmission or switching services for the purpose of the origination or termination of Intrastate InterLATA and Interstate InterLATA traffic . . .

Thus, as this definition reflects, the Parties expressly limited "Switched Access Traffic" under the Interconnection Agreement to interLATA traffic and excluded all traditional intraLATA traffic. Accordingly, by virtue of the "interrelatedness" of Section 5.3.1.1 and 5.3.3, the definition of "Switched Access Traffic" clearly qualifies the language "calls that are originated or terminated through switched access arrangements as established by the State Commission or FCC" by virtue of the "interrelated" language found in Section 5.3.3. [Id.] Specifically, Section 5.3.3. also states:

"[T]his Section 5.3.3 [which contains the definition of "Switched Access Traffic"] is interrelated to Section 5.3.1.1 [which describes "Local Traffic"]."

A. Georgia Law Requires The Commission To Consider All Of The Provisions Of The Interconnection Agreement And Not Just "Isolated" Provisions In Construing The Contract.

Georgia law governs the Interconnection Agreement.[3] As a result, in construing the Interconnection Agreement, the Commission is required to look at the "four corners" of the contract, Stephens v. Parrino and Ware, 138 GA App 634, 226 S.E.2d 809 (1976); and to construe the contract ". . . by examining the agreement in its entirety and not merely by examining isolated clauses and provisions thereof and give regard to the clear intent of the entities rather than particular words..." First Capital Life Insurance Company v. AAA Communications, Inc. 906 F. Supp. 1546 (1995); *See*, also, Richard Haney Ford, Inc. v. Ford Dealer Computer Services, 218 GA App. at 316, 461 S.E.2d 282 (1995). Additionally, as the Eleventh Circuit has held, the Commission is required to interpret the contract so that the entirety of the contract is upheld. Maiz v. Virani, 253 F.3d 641 (11th Cir. (GA) 2001) at 659.

However, in direct conflict with Georgia law, BellSouth asks the Commission to ignore certain of the contract's provisions. In this respect,

[3] In Section 24.6.1 of the General Terms and Conditions of Interconnection Agreement, the Parties agreed that, "the validity of this Agreement, the construction and enforcement of its terms, and the interpretation of the rights and duties of the Parties shall be governed by the laws of the State of Georgia . . . except insofar as federal law may control any aspect of this Agreement, in which case federal law shall govern such aspect."

BellSouth argues that "switched access arrangements" as set forth in Section 5.3.1.1 should stand in isolation as to what the Parties intended regarding what constituted "Local Traffic" for purposes of reciprocal compensation. This is improper, based not only on Georgia law as found in the Stephens, First Capital, Richard Haney Ford, and Maiz decisions cited above, but also as a result of the literal words of the contract. This is because the Parties specifically agreed that the definition of "Switched Access Traffic" in Section 5.3.3 was "interrelated" to Section 5.3.1.1 (which governs what constitutes "Local Traffic").

BellSouth is forced to take this position because when Sections 5.3.1.1 and 5.3.3 are "read together," the only logical construction of the contract "as a whole" is that the Parties agreed that all LATAwide traffic which traditionally had been treated as intraLATA toll traffic would be compensated as "Local Traffic" at the local compensation rate, except for such LATAwide traffic which State Commission or FCC deemed to be interLATA traffic. In other words, the language "switched access arrangements" in Section 5.3.1.1 is limited to "Switched Access Traffic" established by the State Commission or FCC relative only to interLATA traffic.

Accordingly, the language "switched access arrangements" set forth in Section 5.3.1.1 cannot be interpreted as BellSouth advocates to mean both intraLATA traffic and interLATA traffic, for to do so expressly contradicts the

definition of "Switched Access Traffic" in Section 5.3.3 which is limited to interLATA traffic. As a result, the only contract interpretation which allows Sections 5.3.1.1 and 5.3.3 to survive contemporaneously is AT&T's interpretation that "switched access arrangements" as set forth in Section 5.3.1.1 is limited to interLATA traffic as found in the definition of "Switched Access Traffic" in Section 5.3.3. No other construction interprets the contract "as a whole," as is explicitly required by Georgia law.

B. BellSouth's Argument That IntraLATA Traffic, By Definition, Can Never Be Considered InterLATA Traffic For Compensation Purposes Is Inconsistent With BellSouth's Prior Advocacy

BellSouth's rejoinder to this required interpretation of the contract is to assert that "switched access arrangements" as set forth in Section 5.3.1.1 is a parenthetical phrase which necessarily applies only to intraLATA traffic. [Vol. 2, Tr. 39] In other words, BellSouth argues that, by definition, "switched access arrangements" as set forth in Section 5.3.1.1 can never apply to interLATA traffic.

This might have been a reasonable argument in the prior era of telecommunications regulation, but it has no place in the modern regulatory world. Rather, in this new telecommunications era, BellSouth itself, has argued that certain traffic, even if it "looks, smells, and acts like intraLATA traffic," is in fact interLATA traffic.

To confirm this BellSouth advocacy, one need look no further than the issues arbitrated between AT&T and BellSouth in their last arbitration

before this Commission. In fact, it was this arbitration which lead to the Parties executing the Interconnection Agreement and agreeing to Sections 5.3.1.1 and Section 5.3.3. In this arbitration, BellSouth argued that calls to ISP's—even if such calls were originated and terminated in the same LATA—constituted interstate traffic, obviously one type of interLATA traffic. [B. C. Peacock Rebuttal Exhibit 1, Issue Matrix, Issue 1] BellSouth made similar arguments regarding VOIP calls.[4] [Id., Issue 18] Accordingly, it is disingenuous at best for BellSouth now to assert antiquated regulatory concepts regarding what constitutes intraLATA traffic in order to define "switched access arrangements" as set forth in Section 5.3.1.1. Rather, AT&T's interpretation that "switched access arrangements" is set forth in Section 5.3.1.1 is qualified by the definition of "Switched Access Traffic" in Section 5.3.3, is based on BellSouth's own advocacy that certain intraLATA traffic indeed can be interLATA traffic for compensation purposes. In this respect, Georgia law requires the Commission to consider the "surrounding circumstances" which existed at the time the contract was executed. Maiz at 659, 253 F.3d. 641, St. Charles Foods, Inc. v. America's Favorite Chicken Co., 198 F.3d 815 at 820 (11th Cir. (GA) 1999). Clearly, BellSouth's advocacy before this Commission, other State Commissions, and the FCC regarding whether certain intraLATA traffic could be considered interLATA

[4] Moreover, relative to VOIP traffic, in Section 5.3.3 of Second Interconnection Agreement, the Parties specifically agreed to abide by any subsequent FCC rule regarding VOIP. The FCC has jurisdiction over interstate traffic, which for the most part, does not include intraLATA traffic.

traffic for compensation purposes should, and must, be considered by the Commission in interpreting the Interconnection Agreement. Moreover, BellSouth's interpretation of the contract collides with Georgia's well settled law that ". . . doubts in a contract are construely strongly against the drafting party." O.C.G.A. § 13-2-2(5); Empire Distrib., Inc., v. Georgia L. Smith, II, Georgia World Cong. Ctr. Auth. 225 GA App. 742, 509 S.E.2d 650, 653 (1998); Howkins v. Atlanta Baggage Co., 107 GA App. 38, 129 S.E.2d 158 (1962). Regarding construing the contract against the drafting party, there is no dispute in this proceeding that BellSouth both proposed and drafted (1) the "switched access arrangements" language set forth in Section 5.3.1.1; (2) the definition of "Switched Access Traffic" set forth in Section 5.3.3; and (3) the language set forth in Section 5.3.3 which "interrelates" Section 5.3.3 with Section 5.3.1.1. [Vol. 1, Tr. 178-181; Vol. 2, Tr. 36]

Thus, applying all of the various rules of contract construction under Georgia law, Sections 5.3.1.1 and 5.3.3 of the contract clearly establish BellSouth's obligation to charge AT&T at the local compensation rate for all "traditional" LATAwide traffic which is the subject of the dispute at hand.

C. In Considering BellSouth's "Extrinsic" Or Parol Evidence, Such Evidence May Not "Add To," Take From, Or "Vary" The Provisions Of The Interconnection Agreement.

Under Georgia law "parol evidence is inadmissible to add to, take from, or vary a written contract." O.C.G.A. § 13-2-2(1). Moreover, "words

generally bear their usual and common signification; but technical words, words of art, or words used in a particular trade or business will be construed, generally, to be used in reference to this particular meaning." O.C.G.A § 13-2-2(2). Additionally, "the construction which will uphold a contract in whole and in every part is to be preferred, and the whole contract should be looked to in arriving at the construction of any part." O.C.G.A. § 13-2-2(4). Furthermore, in ascertaining the intent of the parties as required by O.C.G.A. § 13-2-3, the intent must be given effect whenever possible, even if a document or instrument is poorly or unskillfully prepared. Skinner v. Bearden, 77 GA App. 325, 326, 48 S.E.2d. 574 (1948); Nelson v. Nelson, 176 GA App. 187, 335 S.E.2d. 411, 412 (1985)

In accordance with O.C.G.A. § 13-2-2, in considering BellSouth's "extrinsic" or parol evidence, the Commission must ignore all such evidence to the extent it is offered in order to vary the terms of the Interconnection Agreement, specifically what constitutes "Local Traffic" as set forth in Section 5.3.1.1 and the definition of "Switched Access Traffic" in Section 5.3.3. Instead, the Commission must give meaning to all of the existing provisions in the contract (including the "entire agreement" or merger clause contained therein). Even if the contract is subject to an exception to the general rule prohibiting the consideration of parol evidence, allowing BellSouth to rely upon "extrinsic" or parol evidence to minimize or eliminate consideration of the definition of "Switched Access Traffic" in Section 5.3.3

violates the rule of contract construction that prefers the construction of a contract which will "uphold the contract in whole." Ochs v. Hoerner, 235 Ga. App. 735, 510 S.E.2d 107 (1998); (holding that parol evidence is inadmissible to alter terms of the unambiguous sales contract in view of the merger clause, even if otherwise subject to some exception to the general rule).

2. The "Extrinsic" Or Parol Evidence Provided By AT&T Overwhelmingly Establishes That The Parties Intended That "Local Traffic" Would Include "Traditional" IntraLATA Toll Traffic For Purposes Of Reciprocal Compensation; BellSouth's Testimony Regarding the Same Is Not Credible.

AT&T's "extrinsic" or parol testimony provides overwhelming evidence that the language "except those calls that are originated or terminated through switched access arrangements as established by the State Commission or FCC" as set forth in Section 5.3.1.1 was agreed to by the Parties in order to "protect" BellSouth in the event a State Commission or the FCC subsequently determined that certain traffic which stayed within a LATA nevertheless constituted interLATA traffic.

This rationale tracks perfectly the definition of "Switched Access Traffic" as found in Section 5.3.3 which is limited to interLATA traffic. The specific examples of such traffic for which BellSouth sought "protection" were calls to ISP's and VOIP calls. [Vol. 1, Tr. 55; 177-178] Thus the "switched access arrangements" language in Section 5.3.1.1 was not agreed to by the Parties to govern traditional intraLATA toll traffic originated or

terminated over "switched access arrangements." Rather, Section 5.3.1.1 specifically states that for such traditional intraLATA toll traffic, the Parties agreed to ". . . apply a LATAwide local concept . . ." meaning that such LATAwide calls would be subject to reciprocal compensation.

In comparison, BellSouth's Testimony does not provide a logical interpretation or analysis of the various contract provisions in dispute. Rather, BellSouth takes out of context the "switched access arrangements" language set forth in Section 5.3.1.1 [Vol. 1, Tr. 40] and ignores the definition of "Switched Access Traffic" set forth in Section 5.3.3. by virtue of its strained interpretation of the "interrelated" language set forth in Section 5.3.3. [Vol. 1, Tr. 42-43] Hoping to confuse the dispute even more, BellSouth also offers Ms. Shiroishi's Testimony regarding various "discussions" which Ms. Shiroishi had with AT&T during the interconnection negotiations.

A. <u>BellSouth's Testimony</u>.

As the Commission will recall, there is a significant difference between the Parties as to what was said by Ms. Shiroishi when the Parties were negotiating Sections 5.3.1.1 and 5.3.3. Despite the fact that BellSouth had several representatives attend these negotiating sessions, BellSouth only offered the testimony of Ms. Shiroishi. Furthermore, although asked by AT&T to produce "any and all notes" which confirmed what was said during

these discussions, Ms. Shiroishi produced no notes of her own.[5] [Vol. 2, Tr. 11]

1. **The Shiroishi Testimony.**

The entirety of Ms. Shiroishi's Testimony regarding what she discussed with AT&T as to Sections 5.3.1.1 and 5.3.3 comes solely from her memory for the period May 16, 2001 through July 19, 2001.[6] With respect to these discussions, Ms. Shiroishi testified:

> BellSouth originally proposed that the exclusion language read "except for those calls that are originated or terminated through switched access arrangements as established by the ruling regulatory body." After discussion around what was means by "the ruling regulatory body," the Parties modified the words to read "except for calls that are originated or terminated through switched access arrangements as established by the State Commission or the FCC." In the course of these discussions, the Parties discussed the fact that this reference was to the switched access arrangements that are offered for purchase through each Party's switched access tariffs, which are approved by the State Commission (for intrastate switched access) or the FCC (for interstate switched access).

---

[5] Moreover, the only notes produced by BellSouth was a one page document created by another BellSouth employee which contains no information regarding the dispute in this proceeding. *See*, AT&T Shiroishi Cross Examination Exhibit 1. [Vol. 2, Tr. 70-72] When asked why more notes were not available, Ms. Shiroishi indicated that BellSouth's "Document Retention Guidelines" provided that once an interconnection agreement was executed, BellSouth's practice is to destroy all notes, emails and "red-lined" versions of the contract. The only document which is saved is the executed contract. [Vol. 2, Tr. 67-70] However, these Guidelines either were not followed regarding the Interconnection Agreement or they were followed inconsistently given that Ms. Shiroishi was able to produce "red-lined" versions of the contract, but not any of her notes. This is particularly surprising given that Ms. Shiroishi became the leader of BellSouth's interconnection team with AT&T, and she also supervises all other BellSouth interconnection negotiators.

[6] The Parties are in agreement that May 16, 2001 was the first date BellSouth provided AT&T with the "switched access arrangements" language set forth in Section 5.3.1.1.

[Vol. 2, Tr. 37]

Ms. Shiroishi also testified:

> The exclusion was specifically written in order to exclude from the definition of local traffic calls that are considered switched access under tariff. As stated above, we had extensive discussion about the exclusion of traffic that was originated or terminated through switched access arrangements. In the course of those discussions, we drew diagrams on the whiteboard and specifically discussed that calls which traversed switched access arrangements and the fact that they would be expressly excluded from the definition of Local Traffic.

[Vol. 2, Tr. 38]

Incredibly, Ms. Shiroishi's Testimony is the only evidence which BellSouth has provided in this proceeding regarding what the Parties discussed regarding the "switched access arrangements" language set forth in Section 5.3.1.1. Moreover, Ms. Shiroishi confirmed in both her deposition and at the hearing, that she never discussed with AT&T what constituted "switched access arrangements" under Section 5.3.1.1.

> Q. All right, wouldn't you agree that the terminology, switched access arrangements, is really the lynchpin in that exclusion language?
>
> A. Yes.
>
> Q. Any you indicated in your deposition that you did not recall specifically discussing that definition with AT&T, isn't that correct.
>
> A. Right, the definition.

[Vol. 3, Tr. 9]

Additionally, at both her deposition and in the hearing, Ms. Shiroishi confirmed that her testimony that calls originated or terminated over "switched access arrangements" would be governed by BellSouth's switched access tariffs was nothing more than her own personal conclusion. In other words, regarding this very critical provision, Ms. Shiroishi admitted that there was no provision in the Interconnection Agreement which provides that calls originated or terminated through "switched access arrangements" would be subject to BellSouth's switched access rate rather than reciprocal compensation:

> Q. All right. Let's go to page 81 of your deposition. I asked you about some of your testimony at line 3. And line 13 of your testimony state – you state: Such a call would be governed by BellSouth's switched access tariffs and would be subject to the appropriate switched access rates. And I said: That line in your testimony, that is your conclusion. That language is not found anywhere in the North Carolina Interconnection Agreement any where. What was your answer?
>
> A. Correct.

[Vol. 3, Tr. 13]

B. <u>AT&T Testimony</u>.

In stark contrast to BellSouth, AT&T filed the testimony of three (3) witnesses in this proceeding, Messrs. King and Peacock, and Ms. Stevens.

As Mr. King testified, he has responsibility for interpreting and implementing the provisions of the Interconnection Agreement. [Vol. 1, Tr. 51] Although Mr. King was not involved in the "face-to-face" negotiations with BellSouth, he was kept informed regarding the negotiations on a daily basis and his approval was required regarding all compensation provisions. [Id.] Mr. Peacock was AT&T's lead negotiator with BellSouth for all nine (9) BellSouth states and he attended every negotiating session. [Vol. 1, Tr. 165-166] Mr. Peacock also was the AT&T manager who routinely informed Mr. King (and other AT&T managers) regarding the status of negotiations. [Id.] Beginning in February 2001, Mr. Peacock was assisted by Ms. Stevens who handled administrative details, including attending negotiating sessions, making and keeping notes of negotiating sessions, and keeping track of "red-lined" versions of the contract exchanged between the Parties. [Vol. 1, Tr. 119-120]

1. The Peacock Testimony.

First, as Mr. Peacock testified, the discussions between BellSouth and AT&T are far off the mark of what Ms. Shiroishi represented:

> The discussions regarding BellSouth's proposed language were framed by the arbitration issues that remained unresolved. These discussions did not include any modification to include intraLATA traffic as "Local Traffic." AT&T's understanding of BellSouth's proposed language was that it was needed to prevent either AT&T (or any Competing Local Provider ("CLP") which "opted-into" or adopted this language under Section 252(i) of the Act) from representing that ISP traffic and VOIP calls constituted "Local Traffic" for purposes of applying local reciprocal compensation rates. My

> discussions with Ms. Shiroishi and subsequent "red-lined contract language changes" were focused on drafting language that met BellSouth's concerns and obligated AT&T to abide by any state commission or FCC Order regarding ISP traffic or VOIP calls.

[Vol. 1, Tr. 177]

Additionally, Mr. Peacock further testified regarding why AT&T agreed to the "switched access arrangements" language set forth in Section 5.3.1.1:

> I discussed Ms. Shiroishi's explanation with Mr. King and others at AT&T and we agreed to accept the language, except that we asked to change "ruling regulatory body" to "State Commission or FCC." Importantly, at this time the Parties also had agreed to a clear and unambiguous definition of "Switched Access Traffic" (proposed by BellSouth) which did not include any intraLATA or "LATAwide Traffic." Moreover, the justification for including language regarding "switched access arrangements" (in order to protect BellSouth from AT&T or other CLPs from representing that ISP traffic or VOIP calls were "Local Traffic"), tracked perfectly the definition of "Switched Access Traffic" in Section 5.3.3. Furthermore, BellSouth offered, and AT&T agreed, to include language in Section 5.3.3 (which includes the definition of "Switched Access Traffic") that this Section 5.3.3 was "interrelated" to Section 5.3.1.1. As discussed above, Section 5.3.1.1 is that Section of Interconnection Agreement where the parties agreed "...to apply a LATAwide local concept to this Attachment 3..." Thus, when these two Sections are "read together" by virtue of the "interrelated" language of Section 5.3.3, it is clear that the definition of "Switched Access Traffic" (which is limited to intrastate interLATA and interstate interLATA traffic) in Section 5.3.3 applies to the "exclusion" language regarding "switched access arrangements" found in Section 5.3.1.1.

[Vol. 1, Tr. 178]

In addition to Mr. Peacock's explanation regarding AT&T's acceptance of the exclusion language, he also testified about other draft contract language which BellSouth changed which confirmed his belief that BellSouth did not intend to exclude traditional intraLATA traffic from what constituted "Local Traffic." As he stated:

> The original "Switched Access Traffic" proposed by BellSouth to AT&T read as follows: "Switched Access Traffic is defined as telephone calls requiring local transmission or switching services for the purpose of the origination or termination of ***Telephone Toll Service***..." During the negotiations, and prior to reaching agreement on all Attachment 3 language, the Parties agreed to modify this sentence so that it read:
>
> "Switched Access Traffic is defined as telephone calls requiring local transmission or switching services for the purpose of the origination or termination of ***Intrastate InterLATA and Interstate InterLATA***..."
>
> BellSouth's acceptance of this modification is yet further support for AT&T's belief that intraLATA traffic was considered "Local Traffic" subject to local reciprocal compensation rates and was not subject to switched access rates. Additionally, BellSouth had proposed to include the following language in Section 5.4 of Attachment 3 regarding compensation for IntraLATA Toll Traffic: "IntraLATA Toll Traffic. IntraLATA Toll Traffic is defined as any telephone call that originates and terminates in the same LATA and is billed by the originating Party as a toll call."
>
> Compensation for IntraLATA Toll Traffic. "For terminating its IntraLATA Toll Traffic on the other

> Party's network, the originating Party will pay the terminating Party's intrastate or interstate terminating switched access tariff rates as set forth in the effective intrastate or interstate access services tariff, whichever is appropriate. The appropriate charges will be determined by the routing of the call. If BellSouth or AT&T is the other Party's end user's presubscribed interexchange carrier or if an end user uses BellSouth or AT&T as an interexchange carrier on a 101XXXX basis, BellSouth or AT&T will charge the other Party the appropriate tariff charges for originating switched access services."
>
> In an e-mail from Ms. Shiroishi to AT&T on July 18, 2001, Ms. Shiroishi states, "Attached is the redline as a result of last night's call. I realized we don't need the intraLATA stuff, so I've redlined. Everything else that you accepted last night is shown as accepted." In the redline version of the contract, the language found on Page 18, lines 10-25, and Page 19, lines 1-3, of my testimony in fact is shown as struck. AT&T and BellSouth signed Interconnection Agreement the next day, on July 19, 2001.

[Vol. 1, Tr. 181]

Thus, BellSouth's willingness to strike the very language that supports its position in this proceeding (that traditional intraLATA traffic was subject to switched access rates) supports AT&T's position that the Parties had agreed to compensate such intraLATA traffic as "Local Traffic."

Moreover, faced with Mr. Peacock's convincing Testimony, during deposition and at the hearing, BellSouth's counsel attempted to get Mr. Peacock to state that the exclusion language addressed "switched access services" in general. Despite BellSouth's repeated attempts to confuse the

issue, Mr. Peacock remained firm in his conviction that this was not the case:

> Q. Do you see the question that I [BellSouth Attorney] asked you at the bottom of page 27. Is it your testimony that the sentence we're looking at in 5 – I think I've been saying 5.1.1.1 – I mean to be saying 5.3.1.1 – but it's the sentence. Additionally, the parties agree that you quote on page 12. Is it your testimony that the sentence was put in as part of the parties resolution of the Voice Over issue. And what was your answer?
>
> A. The language was – let me go back and say no. The language was included through the negotiations to deal with not just Voice Over IP, but the issue of any other access services that AT&T or another CLP in North Carolina would suggested to BellSouth should be treated as local for reciprocal compensation purposes.
>
> Q. And you testified [at your deposition] that as Ms. Shiroishi told you that that exception clause was put in to deal with other access services, correct?
>
> A. Yes.
>
> Q. And when I asked you what other access services you were referring to, you testified at your deposition any Feature Group, A, B, C, any other access services that would be defined by the FCC or the State Commission, correct? It's on page 68.
>
> A. On page 68 of my deposition.
>
> Q. Yes, sir.

A. I didn't realize there were that many pages. The question was what other access services are you referring to? My response was: Any Feature Group, A, B, C, or any other access services that would be defined by the FCC or by the State Commission.

Q. You also testified that other than Ms. Shiroishi telling you that the exclusion language was to exempt other access services from recip comp payments, she didn't say anything else to you about the purpose of that exclusion, correct?

A. That's correct.

Q. And you told Mr. King that the exclusion for switched access arrangements in the agreement was to address BellSouth's concerns that AT&T would claim access services subject to recip comp rates, right?

A. Other access services, specifically ISP-bound traffic as well as Voice Over IP traffic or any other access service as is stated in the arbitration matrix issue 18.

Q. And you also defined – we just went over – you used the term other access services to describe any Feature Group A, B, C, or any other access services that would be defined by the FCC of the State Commission, is that right?

A. That's correct.

[Vol. 2, Tr. 3-5]

Regarding these "general" switched access services, during re-direct Mr. Peacock highlighted for the Commission that his references to Feature

Group A, B, and D traffic still were limited to interLATA traffic as set forth in the definition of "Switched Access Traffic" in Section 5.3.3:

> Q. So in your deposition when you talked about other access services, again you mentioned Feature Group A, B, C, and others, correct?
>
> A. Yes.
>
> Q. On the definition of switched access traffic, 5.3.3, is there a reference there, the Feature Group A, B, and D?
>
> A. Yes.
>
> Q. And how is it used in the context of this provision?
>
> A. It is used in the definition of switched access traffic saying what's included and the following types of traffic that would be included in the switched access traffic.
>
> Q. So it would be Feature Group A, B, and D related to either intraLATA or interLATA interstate?
>
> A. I'm sorry. Yes. As it says in the sentence above it would be interLATA traffic whether intrastate or interstate it would be interLATA traffic.

[Vol. 2, Tr. 22]

Accordingly, contrary to Ms. Shiroishi's revisionist Testimony, Mr. Peacock provides the more credible testimony that the "switched access exclusion" language set forth in Section 5.3.1.1 was agreed to by the Parties to accommodate BellSouth's need to be "protected" against AT&T and other

CLPs from arguing that calls to ISPs, VOIP calls, and other interLATA access services were "Local Traffic" subject to reciprocal compensation.

Finally, Mr. Peacock also addressed Ms. Shiroishi's assertion that the Parties "drew diagrams on the whiteboard" regarding calls that traversed "switched access arrangements." [Vol. 1, Tr. 181] He testified:

> Ms. Shiroishi is correct that the parties drew diagrams on a whiteboard, but those diagrams involved our negotiations regarding network architecture or "Point of Interconnection." As this Commission will remember, this was a complex network facilities issue that was hotly contested in the arbitration, with the parties engaging in multiple rounds of briefs on the issue.[7] It was complex not only from the standpoint of understanding prior orders from the FCC and other state commissions, but also from a network architecture perspective, thus making it almost impossible to discuss the issue without resorting to drawing diagrams. Furthermore, the meeting notes which I reviewed confirmed that such "whiteboard diagrams" were used by the parties in discussing the network architecture or "Point of Interconnection" issue and not to diagram what constituted "switched access arrangements." Again, had Ms. Shiroishi diagramed that "switched access arrangements" would have meant that AT&T would be paying switched access rates for intraLATA traffic, we would have never accepted her "exclusion" language.

[Vol. 1, Tr. 181-182]

[7] In fact, in the Commission's June 19, 2001 Order Ruling On Objections And Requiring The Filing Of The Composite Agreement in the AT&T and BellSouth Arbitration regarding this issue, the Commission stated: "This issue has been one of the most exhaustingly analyzed and briefed issues the Commission has ever dealt with in an arbitration proceeding." Docket No. P-140, Sub 73; and P-646, Sub 7; June 19, 2001; Order at Page 4.

2. The Stevens Testimony.

Ms. Stevens provides the Commission with important corroborating testimony that Mr. Peacock's recollections of the negotiations between the Parties are factual and that Ms. Shiroishi's are not. Like a convincing corroborating witness in a civil or criminal trial, Ms. Stevens had the opportunity to observe the negotiations as they transpired and she documented these negotiations on a real-time basis. In response to a BellSouth discovery request, AT&T produced Ms. Stevens' notes from the period of February 21, 2001 until December 31, 2001.[8] Thus, her notes cover the important time period from when Ms. Shiroishi first became involved in the negotiations until well after November 16, 2001, when first Ms. Shiroishi first advised AT&T that it had a different interpretation of the "switched access arrangements" language in Section 5.3.1.1.[9]

Moreover, with respect to Ms. Shiroishi's statements that she advised AT&T that "switched access arrangements" referred to BellSouth's switched access tariffs, Ms. Stevens testified:

> Q. Do you ever remember being in a meeting, or on a conference call, when Ms. Shiroishi, or anyone else from BellSouth, made such statements?
>
> A. No. Not during the timeframe in question. I do remember her making such a statement,

[8] *See*, AT&T's letter to Commission dated March 19, 2003, attaching a copy of Ms. Stevens' notes produced to BellSouth in response to BellSouth discovery requests in this proceeding.

[9] The Commission will recall that AT&T and BellSouth executed the Interconnection Agreement on July 19, 2001. Thus, Ms. Stevens' notes also cover the important time period both before and after the Interconnection Agreement was executed by the Parties.

but it was only ***after*** the parties had signed Section Interconnection Agreement on July 19, 2002, and it was only when BellSouth began providing its "interpretation" of what constituted "Local Traffic" under Second Interconnection Agreement. My notes reflect that she made such statements at a meeting between the parties on November 16, 2001.

Q. Rather than relying solely on your memory, did you check your meeting or conference call notes to determine whether you ever recorded that Ms. Shiroishi, or anyone else from BellSouth, made such statements?

A. Yes I did. But again, I found no entries in my notes where I had recorded that such statements were made by Ms. Shiroishi or anyone else from BellSouth before the parties signed Second Interconnection Agreement on July 19, 2001.

[Vol. 1, Tr. 122]

Furthermore, regarding the Parties "drawing diagrams on the whiteboard" regarding "switched access arrangements," Ms. Stevens corroborated Mr. Peacock's Testimony that such drawings related to the complex discussions the Parties were having regarding "point of interconnection" and not which types of calls traversed "switched access arrangements."

Q. Do you recall Ms. Shiroishi, or anyone else from BellSouth, making such statements or "drawing such diagrams on the whiteboard?"

A. No.

Q. Did you check your meeting notes to see if you recorded any of these statements or referenced the drawing of diagrams?

A. Yes. Although I found no recorded statements, my meeting notes regarding a meeting of June 6, 2001, state: "Local channel and dedicated Transport Definition—Bill to get with Dave Talbott to discuss BST explanation. Sam drew out BST diagrams."

Q. Please identify "Bill," "Dave Talbott," and "Sam" from your June 6, 2001 meeting notes.

A. "Bill" refers to Bill Peacock; "Dave Talbott" refers to AT&T's subject matter expert on network architecture and "Point of Interconnection;" "Sam" refers to Sam Benenati, my peer on the negotiations team.

Q. Regarding the terms "Local Channel and Dedicated Transport" from your June 6, 2001, meeting notes, to what Sections of Interconnection Agreement do those terms apply?

A. There is a section in Interconnection Agreement titled Network Interconnection. This section has two sub-sections 1.10 and 1.12. In my handwritten notes, and in the version of Interconnection Agreement which we were negotiating at the time, the sub-section references were 1.9 and 1.11. These sub-sections apply to discussions the parties were having regarding network architecture and "Point of Interconnection" and not the definition of "switched access arrangements."

[Vol. 1, Tr. 122-124]

Regarding such diagrams, a review of Ms. Stevens' notes confirms that the diagrams drawn did not relate to "switched access arrangements."

Moreover, perhaps most telling is that Ms. Stevens' notes of November 16, 2001—the same day Ms. Shiroishi advised AT&T that BellSouth had a different interpretation regarding "switched access arrangements"—do contain diagrams which relate to "switched access arrangements." Ms. Stevens' notes of November 16, 2001 are reproduced on the following two (2) pages:

258

11/9/01 MediaOne switch Transition

AT&T - Roberta, Ann Smith, Michael K., Bill
BST - Jan Flint, Michael W., Rhona Reynolds,
Billing group, Michael Moore

Bill → BST aware of our desire to transfer ownership of AOCN code (6040) changed to 7125 (TCG) assoc. OCN + ACNA's w/ now be assoc w/ 7125.

→ LATA Wide Local

11/16/01 BST: Ed H., Beth S., Rhona R., Shelly Decker
AT&T: Jeff K., Ray S., Bill, Sam, Michael

Beth - BST understanding that ATT3 is Facil Based → Both hr own network & interconnect
ATT2 - UNEP.
Bill, Ray, Jeff - agree this is OK
FB and defined by Beth as Not using BST facilities (switching). For us, that means LNS + ALD are FB.

- Beth + Ed agreed we had closure on F2C Cap + 50% lang by adding ref to mid yr settlement. BST w/ put lang. in + resend to us.

FB only

- Beth made clr that offering right now is for Fac Based.

BST interprets that lang says "anything" over switched access stays. Beth brought up as fr.

47

point that AT&T orders all as switched access lines and they can hold us to that via contract language.

BST agrd: Fac Based

- AT&T local EU → LPIC'd to BST mks It call → term to BST EU
  AT&T bills both orig

Fac Based It IntraLATA

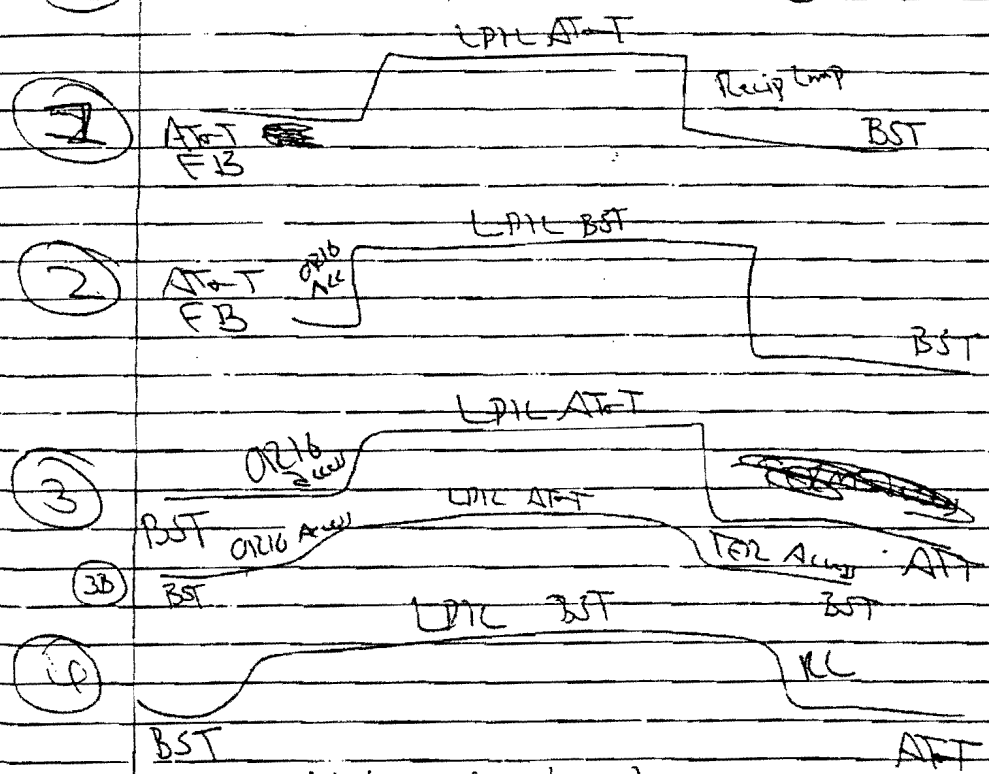

4 is recip of 1

Given this corroborating evidence, in order for the Commission to believe Ms. Shiroishi and not Ms. Stevens regarding such diagrams, the Commission must conclude that Ms. Stevens was "prescient" and thus anticipated that a dispute between the Parties would develop in the future such that, on a calculated basis, she intentionally omitted copying any diagrams regarding "switched access arrangements" in her notes before June 19, 2001, but then included them after the Interconnection Agreement was executed on July 19, 2001. This also would require the Commission to conclude that Ms. Stevens knew at the time of her note-taking that Ms. Shiroishi subsequently would allege that diagrams were drawn before July 19, 2001. None of these conclusions are reasonable.

Moreover, as the Commission will recall, BellSouth's attempts to discredit Ms. Stevens' testimony were quite limited. First, BellSouth complained that Ms. Stevens did not consider "Local Traffic" to be a "key issue" being negotiated by the Parties; and second, various "red-lined" versions of the contract failed to show that the Parties were in fact negotiating language regarding compensation for calls to ISPs and VOIP calls at the same time the Parties were negotiating language for Section 5.3.1.1. [Vol. 1, Tr. 135; 141-144]

As to BellSouth's "key issues" criticism, Ms. Stevens explained her position quite clearly both in her deposition and at the hearing:

> Q. Up on line 4, I asked you, "At any time after you joined the team, through the time the parties signed the agreement in July of 2001, was the definition of local traffic a key issue?" What was your answer?

A. My answer was "no," and it continues to be no.

Q. Okay. And then – okay. Good. And you said, "It wasn't an open issue that the parties were negotiating in 2001." That's your testimony as well, correct?

A. It was not an open issue that the parties were negotiating.

Q. And that you didn't have any recollection of BellSouth proposed a definition of local traffic after you joined the team in 2001, correct?

A. That is correct.

[Vol. 1, Tr. 135]

Although BellSouth attempted to discredit Ms. Stevens regarding her knowledge of "key issues," Ms. Stevens explained that she considered "key issues" to be those still being negotiated by the Parties. More specifically, she stated:

Q. And he asked you about the definition of local traffic being a key issue between AT&T and BellSouth.

A. Correct.

Q. Let's go to line 9, where he asked you the question: "It was never the key issue or did it become – was it a key issue at some point in time?" What was your answer?

A. "It wasn't a key issue during my tenure in February of '01."

Q. And then he asked you the question: "Did it ever become a key issue between February '01 and July 2001?" What was your answer?

A. "No."

Q. Question: "How do you define key issue, then, as you used it earlier?" What was your answer?

A. "A key would have been an outstanding contract issue that the parties had not resolved."

Q. And then his next question was: "Is it your testimony that the parties had resolved the definition of local traffic prior to February of 2001? Your answer was?

A. "Yes."

Q. Was that the reason that you indicated that it was not a key issue during that time frame that he asked you?

A. Yes, because it was not an issue.

[Vol. 1, Tr. 151]

As to various "red-lined" versions of the contract not reflecting that the Parties were negotiating compensation for calls to ISP's and VOIP calls, the Commission is encouraged to review the "red-lined" version of contracts produced by BellSouth in this proceeding.[10] Each such version shows the language in dispute between the Parties regarding these issues up until the

[10] BellSouth's Answers to AT&T's First Set of Interrogatories and First Request for Production of Documents Filed with the Commission by BellSouth on January 15, 2003.

last "red-lined" version of the contract executed exchanged between the Parties on July 19, 2001.

Moreover, relative to ISP traffic in particular, as Ms. Stevens testified, the Parties also were separately negotiating a region-wide settlement of various ISP issues (this included compensation for ISP traffic already transported and terminated under the Parties' prior Interconnection Agreement). Thus, this explains why some of the "red-lined" versions might not have included up-to-date language regarding calls to ISPs. [Vol. 1, Tr. 149-151]

Additionally, the Commission should consider the incredulity of BellSouth's argument that because a July 11, 2001 "red-lined" version of the contract did not have up-to-date language being exchanged regarding calls to ISPs, the Parties must not have been negotiating the issue as of July 11, 2001. [Vol. 1 Tr. 142] To accept this argument, the Commission must conclude that during the intervening eight (8) days between July 11, 2001 and July 19, 2001 (the date the Interconnection Agreement was executed) the Parties miraculously both started and completed negotiations regarding this very controversial issue in this eight (8) day period. As the Commission well knows, the probability that such occurred is nil.

3. **<u>The King Testimony</u>.**

Mr. King confirmed Mr. Peacock's Testimony that BellSouth had requested the "switched access arrangements" language set forth in Section

5.3.1.1 in the context of resolving two (2) issues which the Parties were continuing to negotiate. [Vol. 1, Tr. 53-54]. These were calls to ISPs and VOIP calls [Id.] As Mr. King stated:

> Mr. Peacock explained that BellSouth wanted to include the language to protect BellSouth in the event a state commission or the FCC determined that ISP traffic was deemed jurisdictionally to be interLATA traffic even though the traffic technically stayed within a LATA. Mr. Peacock further explained that BellSouth would not allow such traffic to be compensated as "Local Traffic" when AT&T's long distance network transported this traffic. He said Ms. Shiroishi also was concerned about a state commission or the FCC determining VOIP calls to be interLATA traffic. Further, we discussed the words "regulatory ruling body" and requested that the words be changed to "State Commission or the FCC" given BellSouth's statements that "regulatory ruling body" meant "state commission or the FCC."

[Vol. 1, Tr. 55]

Mr. King also testified regarding what Mr. Peacock advised him regarding other provisions that were being proposed by BellSouth:

> As discussions between Mr. Peacock and BellSouth continued, BellSouth also proposed a definition of "Switched Access Traffic" in Section 5.3.3 (which included only intrastate interLATA and interstate interLATA traffic as "Switched Access Traffic"). BellSouth also proposed language to make it clear that Section 5.3.3 with its definition of "Switched Access Traffic" was "interrelated" to Section 5.3.1.1. (which included the "LATAwide" local concept language regarding "Local Traffic" as well as the "switched access arrangements" language regarding not misrepresenting interLATA traffic as being subject to local compensation rates).

[Vol. 1, Tr. 56]

Finally, Mr. King testified about why he gave Mr. Peacock approval to execute the Interconnection Agreement with the "switched access arrangements" language as set forth in Section 5.3.1.1:

> I gave Mr. Peacock my approval after he advised me of BellSouth's rationale for the language as had been explained to him and others at AT&T. That rationale was that BellSouth wanted to include language regarding "switched access arrangements" in order to protect BellSouth in the event a state commission or the FCC determined that ISP bound traffic was interLATA traffic even though the traffic technically stayed within a LATA; and in the event that the FCC determined that VOIP calls constituted interLATA traffic. Mr. Peacock also indicated that AT&T and BellSouth had reached agreement on a clear and unambiguous definition of "Switched Access Traffic" in Section 5.3.3 that was limited to intrastate interLATA and interstate interLATA traffic and did not include any intraLATA or "LATAwide Traffic." Finally, we discussed that BellSouth also had proposed language that Section 5.3.3 (which defined "Switched Access Traffic") was "interrelated" to Section 5.3.1.1 (which set forth the "LATAwide" local concept for "Local Traffic"). Based on these provisions and Mr. Peacock's discussions with Ms. Shiroishi, I believed that the language which BellSouth had asked be included in Second Interconnection Agreement provided that intraLATA traffic would be compensated at local reciprocal compensation rates and not at switched access rates. It clearly was AT&T's intent for that to be the case, and we never would have agreed to any language that would have required us to pay switched access rates for local intraLATA traffic.

[Vol. 1, Tr. 57]

BellSouth's cross-examination of Mr. King primarily involved whether

Mr. King understood that the term "switched access arrangements" was included in BellSouth's North Carolina Access Tariff. Mr. King agreed that it did. [Vol. 1, Tr. 80-82] However, this is not a compelling fact in this dispute because BellSouth's North Carolina Access Tariff includes BellSouth's switched access rate *for both intrastate intraLATA traffic and intrastate interLATA traffic.*[11]

In this respect, as Mr. King testified, Mr. Peacock had advised him that BellSouth had wanted the "switched access arrangements" language set forth in Section 5.3.1.1 in order to "protect" BellSouth if a State Commission or FCC subsequently determined that calls to ISPs and VOIP calls (even if they stayed within a LATA) were determined to be interLATA calls. [Vol. 1, Tr. 55] Thus, the fact that BellSouth's North Carolina Access Tariff also contains references to "switched access arrangements" for intrastate interLATA calls tracks perfectly with Mr. King's understanding that BellSouth was looking for interLATA "protection" relative to the "switched access arrangements" language set forth in Section 5.3.1.1. BellSouth also asked Mr. King why BellSouth needed to be "protected" relative to calls to ISPs when the FCC already had issued an Order which was consistent with BellSouth's position regarding the treatment of this traffic. This colloquy between BellSouth's counsel and Mr. King was as follows:

---

[11] In this respect, BellSouth's interstate switched access tariff also uses the term "SWA," alleged by BellSouth to mean "switched access arrangement." The website to access BellSouth's interstate switched access tariff is http://cpr.bellsouth.com, *See*, Section 6, Application of Switched Access Service.

Q. Back up for a second. I think we've agreed today already that in your testimony you states that Mr. Peacock told you that BellSouth wanted that exception language to protect BellSouth in the event that the FCC determined that voice over internet calls were interLATA in nature, correct?

A. Correct.

Q. Okay. And my question to you now is: Did Mr. Peacock ever explain to you – and if you can answer yes or no and then if there's some explanation – why it was that BellSouth needed protection from an FCC order that would be consistent with BellSouth's position?

A. Did he ever explain to me BellSouth's reason for the protection?

Q. Why – did he ever explain to you why it was that BellSouth would need protection from an FCC decision that was consistent with BellSouth's policy?

A. Well, obviously, the use of the – you know, the – and there were discussions about the ruling regulatory body and changing at the FCC and to the State Commission and so that allowed for those particular ruling bodies, so to speak, to ultimately make a decision. And what was agreed to is that we would not misrepresent it over switched access trunks so that that type of traffic would not be utilized over those switched access arrangements. And that's what was explained to me, is that AT&T could not expect to send VOIP and ISP, or internet service provider, traffic over switched access and expect to classify it as intraLATA even though it was, by definition, within the LATA.

Part of what I am responsible for is a big bucket of intrastate minutes that I have to determine

> which are local, which are intraLATA – or switched access, rather. And if a call did stay within the LATA, then obviously my reporting process is going to pick that up and so we wanted to insure that those types of calls would not be captured within that reporting process that I deal with. So that's how it related to my involvement, you know, within my discussion with Mr. Peacock.

[Vol. 1, Tr. 87-89]

There are several flaws with BellSouth's argument that it did not need to be "protected" relative to any subsequent FCC determination regarding calls to ISP's. First, as BellSouth's counsel specifically stated at the hearing "... BellSouth's position is and always has been that such calls are interLATA in nature." [Vol. 1, Tr. 87] Additionally, the "FCC decision" to which BellSouth's counsel referred was the FCC's ISP Order. Contrary to BellSouth's counsel's representations, in this Order the FCC did not determine that calls to ISPs constituted interLATA traffic. Rather the FCC held that such traffic was "predominately interstate in nature."[12] This distinction is significant in that interstate traffic obviously does not include intrastate interLATA traffic. Thus, indeed BellSouth needed further "protection" in the event the FCC subsequently determined that calls to ISPs constituted interLATA traffic. Moreover, as Mr. King also testified, the rates which AT&T and BellSouth agreed to in the Interconnection Agreement

[12] Order on Remand and Report and Order, Implementation of the Local Competition Provisions in the Telecommunications Act of 1996, Intercarrier Compensation for ISP-Bound Traffic, CC Docket No. 96-98, 99-68, ¶1, April 27, 2001.

relative to compensation for calls to ISPs were not interstate rates. [Vol. 1 Tr. 105]

Finally, relative to VOIP calls, BellSouth certainly needed "protection" in the event a State Commission or FCC determined such traffic to the interLATA. Specifically, this Commission already had declined to rule that VOIP calls constituted compensable traffic,[13] and the FCC currently is considering whether VOIP is switched access traffic.[14]

3. The "Red-Lined" Versions Of The Interconnection Agreement Supports The Peacock, Stevens, And King Testimony And Not The Shiroishi Testimony.

Relative to evaluating the credibility of Messrs. Peacock and King, and Ms. Stevens as opposed to that of Ms. Shiroishi, the Commission can determine for itself whether the proposed drafts of contract language exchanged between the Parties during July, 2001 supports the same. To aid in this effort, AT&T has prepared three (3) matrices[15] which discuss the three (3) most relevant contract provisions to this dispute: (1) "Local Traffic," (2) "Switched Access Traffic," and (3) "IntraLATA Toll Traffic."

---

[13] NCUC Recommended Arbitration Order in AT&T and BellSouth Arbitration, Docket Nos: P-140, Sub 73, P-646, Sub 7, dated March 9, 2001; Findings of Fact No. 5, Pages 6, 20-24.

[14] October 18, 2002, AT&T filed its "Petition For Declaratory Ruling That AT&T's Phone-To-Phone IP Telephony Services Are Exempt From Access Charges", FCC Docket No. 02-361. The Petition is pending.

[15] The contract provisions contained in these matrices are taken from e-mails and "red-lined" versions of Interconnection Agreement produced by BellSouth in response to AT&T's 1st Request for Production of Documents in this proceeding.

LOCAL TRAFFIC MATRIX

Shiroishi to Peacock July 11, 2001 6:12 p.m.	**5.3** 5.3.1 **5.3.1.1**	**Interconnection Compensation** <u>Compensation for Local Traffic</u> For reciprocal compensation between the Parties pursuant to this Attachment, Local Traffic is defined as any telephone call that originates and terminates in the same LATA except for those calls that are originated or terminated through switched access arrangements as established by the ruling regulatory body when the original Party has its own switch. **[OPEN-AT&T]** Therefore when an AT&T end user originates traffic and AT&T sends it to BellSouth for termination, AT&T will determine whether the traffic is local or intraLATA toll. When a BellSouth end user originates traffic and BellSouth send it to AT&T for termination, BellSouth will determine whether the traffic is local or intraLATA toll. Each Party will provide the other with information that will allow it to distinguish local from intraLATA toll traffic. At a minimum, each Party shall utilize NXX's in such a way that the other Party shall be able to distinguish local from intraLATA toll traffic. **DISAGREE** **AT&T PROPOSAL: As clarification of this definition and for reciprocal compensation, Local Traffic does include traffic that originates and terminates to or through enhanced service provider or information service provider.** **BST PROPOSAL: As clarification of this definition and for reciprocal compensation, Local Traffic does not include traffic that originates from or is directed to or through an enhanced service provider or information service provider.**
Shiroishi to Peacock July 18, 2001 7:27 a.m.	5.3.1 5.3.1.1	<u>Compensation for Local Traffic</u> ***** Shiroishi adds language that Parties have agreed to compensation for calls to ISPs by agreeing to implement FCC's ISP Order ***** For the treatment of local and ISP-bound traffic in this Agreement, the Parties agree to implement the FCC's Order on Remand and Report and Order in CC Docket 96-98 and 99-68 released April 27, 2001 ("ISP Order on Remand"). The Parties further agree to amend this agreement, within sixty (60) days of execution, to incorporate language reflecting the FCC ISP Order on Remand. At such time as that amendment is finalized, the Parties agree to work cooperatively to "true-up" compensation amounts consistent with the terms of the amended language from the effective date of the FCC ISP Order on Remand to the date the amendment is finalized. Additionally, the Parties agree to apply a "LATAwide" local concept to this Attachment 3,

		meaning that traffic that has traditionally been treated as intraLATA toll traffic will now be treated as local for intercarrier compensation purposes, except for those calls that are originated or terminated through switched access arrangements as established by the ***** Shiroishi changes "ruling regulatory body" to "State Commission or FCC"** *** State Commission or FCC.
Peacock to Shiroishi July 19, 2001 2:21 a.m.	**5.3** 5.3.1 5.3.1.1	**Interconnection Compensation** <u>Compensation for Local Traffic</u> For the treatment of local and ISP-bound traffic in this Agreement, the Parties agree to implement the FCC's Order on Remand and Report and Order in CC Docket No. 96-98 and 99-68 released April 27, 2001 ("ISP Order on Remand"). The Parties further agree to amend this agreement, within sixty (60) days of execution, to incorporate language reflecting the FCC ISP Order on Remand. At such time as that amendment finalized, the Parties agree to work cooperatively to "true-up" compensation amounts consistent with the terms of the amended language from the effective date of the FCC ISP Order on Remand to the date the amendment is finalized. ***** Following Underlined Sentences added by Peacock ***** <u>In no event shall this Agreement have any effect on the rates applicable to interconnection traffic and ISP traffic prior to the effective date of the FCC ISP Order or any claims by AT&T against BellSouth for non-payment of such charges. The rates applicable to ISP traffic under this Agreement pursuant to the FCC ISP Order shall in no event be deemed to apply retroactively prior to the effective date of the FCC ISP Order</u>. Additionally, the Parties agree to apply a "LATAwide" local concept to this Attachment 3, meaning that traffic that has traditionally been treated as intraLATA toll traffic will now be treated as local for intercarrier compensation purposes, except for those calls that are originated or terminated through switched access arrangements as established by the State Commission or FCC.
Shiroishi to Peacock July 19, 2001 9:59 a.m.	**5.3** 5.3.1 5.3.1.1	**Interconnection Compensation** <u>Compensation for Local Traffic</u> For the treatment of local and ISP-bound traffic in this Agreement, the Parties agree to implement the FCC's Order on Remand and Report and Order in CC Docket No. 96-98 and 99-68 released April 27, 2001 ("ISP Order on Remand"). The Parties further agree to amend this agreement, within sixty (60) days of execution, to incorporate language reflecting the FCC ISP Order on Remand. At such time as that amendment finalized, the Parties agree to work cooperatively to "true-up" compensation amounts consistent with the terms of the amended language from the effective date of the FCC ISP Order on Remand to the date the amendment is finalized. ***** Shiroishi Deletes two Sentences Added by Peacock on July 19, 2001, 2:21 a.m.**

		*** Additionally, the Parties agree to apply a "LATAwide" local concept to this Attachment 3, meaning that traffic that has traditionally been treated as intraLATA toll traffic will now be treated as local for intercarrier compensation purposes, except for those calls that are originated or terminated through switched access arrangements as established by the State Commission or FCC.

As this matrix clearly reflects and contrary to BellSouth's allegations, in July 2001, the Parties in fact were negotiating compensation for ISP traffic while also negotiating the "switched access arrangements" language set forth in Section 5.3.1.1. Specifically, on July 17, 2001, Ms. Shiroishi sent AT&T BellSouth's proposed language regarding implementation of the FCC's ISP Order. Note also that on July 17, 2001, the language "ruling regulatory body" still is included in the "switched access arrangement" exclusion language. It is changed to "State Commission or FCC" only after Ms. Shiroishi sent BellSouth's next draft to AT&T on July 18, 2001. Furthermore, the fact that the Parties continued to negotiate relative to compensation for calls to ISP's is reflected in the two (2) sentences regarding ISP traffic proposed by Mr. Peacock on July 19, 2001. Moreover, compensation for ISP traffic was not resolved until later in the day on July 19, 2001 when the Parties agreed to delete the two (2) sentences added by Mr. Peacock earlier on July 19, 2001. The Interconnection Agreement was executed later that day on July 19, 2001.

Accordingly, all of Ms. Shiroishi's Testimony and BellSouth's cross-examination questions which were offered to convince the Commission that

the "switched access arrangements" language set forth in Section 5.3.1.1 was negotiated separately from compensation for calls to ISP's and VOIP calls (discussed further below relative to "Switched Access Traffic") are for naught. Rather, these "Local Traffic" red-lined contract provisions fully corroborate Messrs. Peacock's and King's, and Ms. Stevens' Testimony and contradict Ms. Shiroishi Testimony.

SWITCHED ACCESS TRAFFIC MATRIX

Shiroishi to Peacock July 11, 2001 6:21 p.m.	**Switched Access Traffic**. Switched Access Traffic is defined as telephone calls requiring local transmission or switching services for the purpose of the origination or termination of Telephone Toll Service. Switched Access Traffic includes, but is not limited to, the following types of traffic: Feature Group A, Feature Group B, Feature Group C, Feature Group D, toll free access (e.g., 800/877/888), 900 access, and their successors. The Parties have been unable to agree as to whether Voice over Internet Protocol (VOIP) transmissions which cross local calling area boundaries constitute Switched Access Traffic. Notwithstanding the foregoing, and without waiving any rights with respect to either Party's position as to the jurisdictional nature of VOIP, the Parties agree to abide by any effective and applicable FCC rules and orders regarding the nature of such traffic and the compensation payable by the Parties for such traffic, if any; provided however, that any VOIP transmission which originates in one local calling area and terminates in another local calling area (i.e., the end-to-end points of the call), shall not be compensated as Local Traffic.
Peacock to Shiroishi July 16, 2001 4:20 p.m.	**Switched Access Traffic**. Switched Access Traffic is defined as telephone calls requiring local transmission or switching services for the purpose of the origination or termination of ***** Peacock "Strike-Out" of Telephone Toll Service ***** ~~Telephone Toll Service~~. Switched Access Traffic includes, but is not limited to, the following types of traffic: Feature Group A, Feature Group B, Feature Group C, Feature Group D, toll free access (e.g., 800/877/888), 900 access, and their successors. The Parties have been unable to agree as to whether Voice over Internet Protocol (VOIP) transmissions which cross local calling area boundaries constitute Switched Access Traffic. Notwithstanding the foregoing, and without waiving any rights with respect to either Party's position as to the jurisdictional nature of VOIP, the Parties agree to abide by any effective and applicable FCC rules and orders regarding the nature of such traffic and the compensation payable by the Parties for such traffic, if any; ~~provided however, that any VOIP transmission which originates in one local calling area and terminates in another local~~

	~~calling area (i.e., the end-to-end points of the call), shall not be compensated as Local Traffic.~~
Shiroishi to Peacock July 17, 2001 12:54 p.m.	**Switched Access Traffic**. Switched Access Traffic is defined as telephone calls requiring local transmission or switching services for the purpose of the origination or termination of ~~Telephone Toll Service~~. Switched Access Traffic includes, but is not limited to, the following types of traffic: Feature Group A, Feature Group B, Feature Group C, Feature Group D, toll free access (e.g., 800/877/888), 900 access, and their successors. The Parties have been unable to agree as to whether Voice over Internet Protocol (VOIP) transmissions which cross local calling area boundaries constitute Switched Access Traffic. Notwithstanding the foregoing, and without waiving any rights with respect to either Party's position as to the jurisdictional nature of VOIP, the Parties agree to abide by any effective and applicable FCC rules and orders regarding the nature of such traffic and the compensation payable by the Parties for such traffic, if any; provided however, that any VOIP transmission which originates in one LATA and terminates in another LATA (i.e., the end-to-end points of the call), shall not be compensated as Local Traffic.*** **Shiroishi Adds Last Sentence** This Section 5.3.2 is interrelated to Section 5.3.1.2.***
Shiroishi to Peacock July 18, 2001 7:27 p.m.	**Switched Access Traffic**. Switched Access Traffic is defined as telephone calls requiring local transmission or switching services for the purpose of the origination or termination of *** **Shiroishi adds "IntraLATA Intrastate, Intrastate InterLATA and Interstate InterLATA"** *** IntraLATA Intrastate, Intrastate InterLATA and Interstate InterLATA traffic. *** **Note: Telephone Toll Service deleted from July 16, 2001, 4:20 p.m. "red-line."** *** Switched Access Traffic includes, but is not limited to, the following types of traffic: Feature Group A, Feature Group B, Feature Group D, toll free access (e.g., 800/877/888), 900 access, and their successors. The Parties have been unable to agree as to whether Voice over Internet Protocol (VOIP) transmissions which cross local calling area boundaries constitute Switched Access Traffic. Notwithstanding the foregoing, and without waiving any rights with respect to either Party's position as to the jurisdictional nature of VOIP, the Parties agree to abide by any effective and applicable FCC rules and orders regarding the nature of such traffic and the compensation payable by the Parties for such traffic, if any; provided however, that any VOIP transmission which originates in one LATA and terminates in another LATA (i.e., the end-to-end points of the call), shall not be compensated as Local Traffic. This Section is interrelated to Section 5.3.1.1.
Peacock to Shiroishi July 19, 2001 2:21 a.m.	**Switched Access Traffic**. Switched Access Traffic is defined as telephone calls requiring local transmission or switching services for the purpose of the origination or termination of *** **Peacock Highlights IntraLATA Intrastate For Discussion** *** IntraLATA Intrastate, *** **Peacock moves following language up in the Section.** *** (If BellSouth or AT&T is the other Party's end user's presubscribed interexchange carrier or if an end user uses BellSouth or AT&T as an interexchange carrier on a 101XXX basis, BellSouth or AT&T will charge the other Party the appropriate tariff charges for originating swiched access services.) ~~calls that are routed over switched access trunk groups,~~ Intrastate InterLATA and Interstate InterLATA traffic. Switched Access Traffic includes, but is

	not limited to, the following types of traffic: Feature Group A, Feature Group B, Feature Group D, toll free access (e.g., 800/877/888), 900 access, and their successors. ~~(If BellSouth or AT&T is the other Party's end user's presubscribed interexchange carrier or if an end user uses BellSouth or AT&T as an interexchange carrier on a 101XXX basis, BellSouth or AT&T will charge the other Party the appropriate tariff charges for originating switched access services.)~~ However, ~~T~~the Parties have been unable to agree as to whether Voice over Internet Protocol (VOIP) transmissions which cross local calling area boundaries constitute Switched Access Traffic. Notwithstanding the foregoing, and without waiving any rights with respect to either Party's position as to the jurisdictional nature of VOIP, the Parties agree to abide by any effective and applicable FCC rules and orders regarding the nature of such traffic and the compensation payable by the Parties for such traffic, if any; provided however, that any VOIP transmission which originates in one LATA and terminates in another LATA (i.e., the end-to-end points of the call), shall not be compensated as Local Traffic. This Section 5.3.2 is interrelated to Section 5.3.1.1.
Shiroishi to Peacock July 19, 2001 9:59 a.m.	**Switched Access Traffic**. Switched Access Traffic is defined as telephone calls requiring local transmission or switching services for the purpose of the origination or termination of *** **Shiroishi "Strikes Out" IntraLATA Intrastate** *** ~~IntraLATA Intrastate~~, Intrastate InterLATA and Interstate InterLATA traffic. Switched Access Traffic includes, but is not limited to, the following types of traffic: Feature Group A, Feature Group B, Feature Group D, toll free access (e.g., 800/877/888), 900 access, and their successors. Additionally, if BellSouth or AT&T is the other Party's end user's presubscribed interexchange carrier or if an end user uses BellSouth or AT&T as an interexchange carrier on a 101XXX basis, BellSouth or AT&T will charge the other Party the appropriate tariff charges for originating switched access services. The Parties have been unable to agree as to whether Voice over Internet Protocol (VOIP) transmissions which cross local calling area boundaries constitute Switched Access Traffic. Notwithstanding the foregoing, and without waiving any rights with respect to either Party's position as to the jurisdictional nature of VOIP, the Parties agree to abide by any effective and applicable FCC rules and orders regarding the nature of such traffic and the compensation payable by the Parties for such traffic, if ~~any;~~any; provided however, that any VOIP transmission which originates in one LATA and terminates in another LATA (i.e., the end-to-end points of the call), shall not be compensated as Local Traffic. This Section is interrelated to Section 5.3.1.1.

These "red-lined" versions confirm that BellSouth first proposed a definition of "Switched Access Traffic" as set forth in Section 5.3.3 to AT&T on July 1, 2001. They also confirm (contrary to Ms. Shiroishi's Testimony)

that the definition of "Switched Access Traffic" was not being negotiated by the Parties solely to confirm their agreement that VOIP calls would not be compensated at a switched access rate until the FCC subsequently determined the classification of this traffic. In this respect, the Commission should note that on July 19, 2001 at 2:21 a.m., Mr. Peacock sent Ms. Shiroishi a proposed revised Section 5.3.3 in which he added the following language:

> If BellSouth or AT&T is the other Party's end user's presubscribed interexchange carrier or if an end-user uses BellSouth or AT&T as an interexchange carrier or on an 101XXXX basis, BellSouth or AT&T will charge the other Party the appropriate tariff charges for originating switched access services.

As is abundantly clear, this language has nothing to do with VOIP calls, but rather was added by Mr. Peacock to cover the situation where one of the Parties is a customer's local service provider, yet the customer "PICs" the other Party to be their intraLATA toll carrier. This language was accepted by BellSouth and is contained in the final version of the contract.

Moreover, the Commission also should review the various language changes which the Parties made in defining "Switched Access Traffic" from July 11, 2001 through July 19, 2001. First, when Ms. Shiroishi initially proposed the definition of "Switched Access Traffic" on July 11, 2001, she defined it as "Telephone Toll Traffic." Then between July 11, 2001 and July 16, 2001, Ms. Shiroishi added "IntraLATA Intrastate, Intrastate

InterLATA and Interstate InterLATA" traffic to the definition of "Switched Access Traffic."[16] Mr. Peacock then objected to this language, first "marking through" the language "Telephone Toll Service" on July 16, 2001 at 4:20 p.m. and then "highlighting" "IntraLATA Intrastate" on July 19, 2001 at 2:21 a.m. Mr. Peacock highlighted this language so that the Parties could discuss the same during their next negotiating session which occurred later that same day. This was consistent with the prior practice of the Parties relative to highlighting language and exchanging "red-lined" versions of the contract. After the next negotiating session, on July 19, 2001 at 9:59 a.m., Ms. Shiroishi sent Mr. Peacock the final language for Section 5.3.3. Importantly, in this last red-lined version of the contract, Ms. Shiroishi deleted the words "IntraLATA Intrastate" from the definition of "Switched Access Traffic." This clearly confirms Mr. Peacock's Testimony that the Parties had negotiated a definition of "Switched Access Traffic" which did not include traditional intraLATA traffic.

In this respect, if as Ms. Shiroishi alleges (1) there was no connection between the Parties' agreement regarding what constituted "Local Traffic" in Section 5.3.1.1 and the definition of "Switched Access Traffic" in Section 5.3.3; and (2) the definition of "Switched Access Traffic" in Section 5.3.3 was negotiated by the Parties solely to govern VOIP calls, it is difficult to

[16] From carefully reviewing the "red-lined" versions of the contract, AT&T believes there was an intervening "red-lined" version of the contract proposed by BellSouth between July 11, 2001 and July 16, 2001. However, it appears not to have been produced by BellSouth.

understand why Ms. Shiroishi ever would have attempted to define "Switched Access Traffic" to include traditional intraLATA traffic.[17] However, from reviewing the "red-lined" versions of the contract, there is no doubt she did.

Accordingly, Ms. Shiroishi's argument that the definition of "Switched Access Traffic" only was agreed to by the Parties regarding VOIP calls is inconsistent with the actual "give and take" negotiations between the Parties. Rather, these negotiations support Mr. Peacock's Testimony that he advised Mr. King that the Parties had reached agreement on a definition of "Switched Access Traffic" which clearly did not include traditional intraLATA traffic. As the Commission will recall, Mr. King testified that this assurance confirmed his understanding that BellSouth was not attempting to exclude traditional intraLATA traffic from what constituted "Local Traffic." [Vol. 1, Tr. 57-58]

There are two (2) other issues the Commission should consider in evaluating the credibility of Ms. Shiroishi's Testimony regarding why the Parties agreed to include the definition of "Switched Access Traffic" in Section 5.3.3 of the Interconnection Agreement.

---

[17] This is particularly the case relative to VOIP calls which BellSouth alleged was interLATA traffic. *See*, specifically BellSouth's counsel's cross examination of Mr. King: Q. Now, let's first talk about VOIP calls. You know that BellSouth's position, in its arbitration with AT&T and generally, was that voice over internet calls should be treated as interLATA, correct? A. That has been BellSouth's position. Q. To your knowledge, BellSouth has never changed that position, correct? A. Correct. [Vol. 1, Tr. 86]

First, if the "interrelated" language of Section 5.3.3 was included only to protect BellSouth against other CLP's adopting the VOIP language included in Section 5.3.3, but not also adopting Section 5.3.1.1 relative to what constitutes "Local Traffic," why did Ms. Shiroishi not include the "interrelated" language on July 11, 2001 when she first proposed the definition of "Switched Access Traffic" to AT&T? As it turns out, the "interrelated" language was not added by BellSouth until July 17, 2001—at the very same time that Ms. Shiroishi also was attempting to get "IntraLATA Intrastate" traffic added to the definition of "Switched Access Traffic." If Ms. Shiroishi been able to convince AT&T to include intraLATA Intrastate calls in the definition of "Switched Access Traffic" set forth in Section 5.3.3, then it would have been a significant advantage for BellSouth to have had Section 5.3.3 "interrelated" to Section 5.3.1.1. This is because such "interrelatedness" would have confirmed the Parties agreement that "Local Traffic" did not include intraLATA traffic. It well may be that this was why the "interrelated" language of Section 5.3.3 first was proposed by BellSouth, and thereafter, BellSouth found it difficult to remove the language once intrastate intraLATA traffic was removed from the definition of "Switched Access Traffic."

Second, if all traditional "LATAwide" traffic was not to be included in "Local Traffic," why does the VOIP language in Section 5.3.3 specifically state VOIP calls "which originates in one LATA" and "terminates in another

LATA" shall not be compensated as "Local Traffic"? Obviously, with this language, the Parties have distinguished "Local Traffic" from "non-Local Traffic" based on whether the call remains in the LATA.

INTRALATA TOLL TRAFFIC MATRIX

Shiroishi to Peacock July 11, 2001 6:21 a.m.	5.4 5.4.1 5.4.2	Compensation for IntraLATA Toll Traffic IntraLATA Toll Traffic. IntraLATA Toll Traffic is defined as any telephone call that originates and terminates in the same LATA and is billed by the originating Party as a toll call. Compensation for IntraLATA Toll Traffic. For terminating its IntraLATA Toll Traffic on the other Party's network, the originating Party will pay the terminating Party's intrastate or interstate terminating switched access tariff rates as set forth in the effective intrastate or interstate access services tariff, whichever is appropriate. The appropriate charges will be determined by the routing of the call. If BellSouth or AT&T is the other Party's end user's presubscribed interexchange carrier or if an end user uses BellSouth or AT&T as an interexchange carrier on a 101XXXX basis, BellSouth or AT&T will charge the other Party the appropriate tariff charges for originating switched access services.
Shiroishi to Peacock July 18, 2001 7:27 a.m.	~~5.4~~ ~~5.4.1~~ ~~5.4.2~~ 5.3.9	***** Shiroishi "Strikes-Out" Following Language ***** ~~Compensation for IntraLATA Toll Traffic~~ ~~IntraLATA Toll Traffic. IntraLATA Toll Traffic is defined as any telephone call that originates and terminates in the same LATA and is billed by the originating Party as a toll call.~~ ~~Compensation for IntraLATA Toll Traffic.~~ ***** Shiroishi "Strikes-Out" Following Language ***** ~~For terminating its IntraLATA Toll Traffic on the other Party's network, the originating Party will pay the terminating Party's intrastate or interstate terminating switched access tariff rates as set forth in the effective intrastate or interstate access services tariff, whichever is appropriate. The appropriate charges will be determined by the routing of the call.~~ If BellSouth or AT&T is the other Party's end user's presubscribed interexchange carrier or if an end user uses BellSouth or AT&T as an interexchange carrier on a 101XXXX basis, BellSouth or AT&T will charge the other Party the appropriate tariff charges for originating switched access services.
Peacock to Shiroishi July 19, 2001 2:21 a.m.	~~5.4~~ ~~5.4.1~~	~~Compensation for IntraLATA Toll Traffic~~ ~~IntraLATA Toll Traffic. IntraLATA Toll Traffic is defined as any telephone call that originates and terminates in the same LATA and is billed by the originating Party as a toll call.~~ ~~Compensation for IntraLATA Toll Traffic. For terminating its~~

	~~5.4.2~~ 5.3.9	~~IntraLATA Toll Traffic on the other Party's network, the originating Party will pay the terminating Party's intrastate or interstate terminating switched access tariff rates as set forth in the effective intrastate or interstate access services tariff, whichever is appropriate. The appropriate charges will be determined by the routing of the call.~~*** **Peacock "Strike-Out" Remaining Language** ***~~If BellSouth or AT&T is the other Party's end user's presubscribed interexchange carrier or if an end user uses BellSouth or AT&T as an interexchange carrier on a 101XXXX basis, BellSouth or AT&T will charge the other Party the appropriate tariff charges for originating switched access services.~~
Shiroishi to Peacock July 19, 2001 9:59 a.m.	~~5.4~~ ~~5.4.1~~ ~~5.4.2~~	~~Compensation for IntraLATA Toll Traffic~~ ~~IntraLATA Toll Traffic. IntraLATA Toll Traffic is defined as any telephone call that originates and terminates in the same LATA and is billed by the originating Party as a toll call.~~ ~~Compensation for IntraLATA Toll Traffic. For terminating its IntraLATA Toll Traffic on the other Party's network, the originating Party will pay the terminating Party's intrastate or interstate terminating switched access tariff rates as set forth in the effective intrastate or interstate access services tariff, whichever is appropriate. The appropriate charges will be determined by the routing of the call. If BellSouth or AT&T is the other Party's end user's presubscribed interexchange carrier or if an end user uses BellSouth or AT&T as an interexchange carrier on a 101XXXX basis, BellSouth or AT&T will charge the other Party the appropriate tariff charges for originating switched access services.~~

Finally, this matrix also supports Mr. Peacock's position that BellSouth agreed that traditional intraLATA toll traffic was included in what constituted "Local Traffic" in Section 5.3.1.1. In this respect, the foregoing language shows that on July 11, 2001, Ms. Shiroishi still was attempting to convince AT&T to agree that intraLATA toll traffic was subject to the Party's switched access tariff rates. However, she deleted the foregoing language on July 18, 2001 as the Parties were continuing to negotiate Sections 5.3.1.1 and 5.3.3. Irrespective of Ms. Shiroishi's Testimony that this "IntraLATA Toll Traffic" language was no longer needed after the Parties completed their

negotiations of Sections 5.3.1.1 and 5.3.3, the deletion of the very language which would have allowed BellSouth to charge AT&T switched access rates for calls originated or terminated over "switched access arrangements" (as BellSouth has defined "switched access arrangements" in this proceeding) certainly begs the question of what Ms. Shiroishi was discussing with AT&T during this time frame regarding BellSouth's interpretation of the "switched access arrangements" language set forth in Section 5.3.1.1. In this respect, her e-mail to Mr. Peacock of July 18, 2001 at 7:27 a.m. simply states "I realized that we don't need the intraLATA stuff, so I've red-lined it." [Vol. 1, Tr. 181] Interestingly, she provided no further explanation regarding this very significant change in the contract. This is highly suspect given that BellSouth just had anointed Ms. Shiroishi as an interconnection negotiations expert who also supervised all of the other BellSouth interconnection negotiators. Moreover, Ms. Shiroishi also served as BellSouth's subject matter expert for interconnection. [Vol. 2, Tr. 64-64;; 76-77]

Furthermore as the drafter (or in this case the "deleter") of such contract language, Ms. Shiroishi's lack of clarity and explanation regarding the same must be construed against BellSouth under Georgia law. *See*, Empire Distrib. And Howkins v. Atlanta Baggage Co. Accordingly, Mr. Peacock certainly was entitled to put Ms. Shiroishi's deletion of this language "into the equation" as he explained to Mr. King the various

provisions of the Interconnection Agreement which led both Messrs. King and Peacock to conclude that BellSouth had agreed to treat traditional intraLATA traffic as "Local Traffic" for reciprocal compensation purposes.

4. BellSouth's "Extrinsic" Or Parol Evidence Fails The Logic Test.

A. BellSouth Already Had Agreed To A LATAwide Definition Of "Local Traffic" In Its Mississippi Interconnection Agreement With AT&T.

As Mr. Peacock testified, BellSouth and AT&T did not go into the North Carolina negotiations "cold." Rather, on March 23, 2001, the Parties executed an Interconnection Agreement for Mississippi which included a LATAwide definition of "Local Traffic." [Vol. 1, Tr. 186-187, B. C. Peacock Rebuttal Exhibit 5] The definition of "Local Traffic" in this contract provides "Local Traffic means any telephone call that originates and terminates in the same LATA." [B. C. Peacock, Rebuttal Exhibit 5 at Page 20]

Notwithstanding the fact that the Parties already had agreed to a LATAwide definition of "Local Traffic" for Mississippi, BellSouth would like the Commission to conclude that AT&T was perfectly willing to accept a less favorable definition for North Carolina. This defies all common sense and logic. Moreover, in this proceeding AT&T repeatedly has attempted to determine from BellSouth why BellSouth agreed to a LATAwide definition of Local Traffic in Mississippi, but not in North Carolina. BellSouth would never answer the question. Specifically, AT&T asked BellSouth the following interrogatory:

> ... why did BellSouth agree with AT&T in its Mississippi interconnection agreement that "... all calls in the LATA would be considered local" and did not agree to the same language with AT&T in interconnection agreements in other states; identify who at AT&T and BellSouth was involved in the negotiations of the Mississippi Interconnection Agreement and when these negotiations started and concluded.

[AT&T 1st Set of Interrogatories, Interrogatory No. 6, served on BellSouth, January 9, 2003.]

BellSouth's answer was not responsive:

> The Mississippi agreement was negotiated and executed before the North Carolina agreement. It was BellSouth's intent at the time that the North Carolina agreement was negotiated not to include as local calls those calls that originated or terminated over switched access arrangements. Thus, language addressing this issue was included in the North Carolina agreement.

[BellSouth Response to AT&T Interrogatory No. 6, dated January 15, 2003.]

Although BellSouth would not answer the question, upon closer examination of the provisions of the Mississippi Interconnection Agreement AT&T concluded that the treatment of calls to ISP's justified the difference in the definitions of "Local Traffic" from Mississippi to North Carolina. Moreover, this confirmed Mr. Peacock's Testimony that one reason BellSouth wanted the "switched access arrangements" language in North Carolina was to provide BellSouth "protection" regarding future regulatory decisions related to calls to ISPs. Consider the following cross examination of Ms. Shiroishi:

Q. Now, the date of the Mississippi agreement was March 28, 2001. That was before the FCC's Order on Remand regarding ISP traffic, correct?

A. It was before it was effective but I believe it was released maybe in February.

Q. What did the Mississippi agreement say relative to how the parties were going to compensate each other for ISP traffic?

A. The parties agreed to compensate each other at the rates listed in 6.1.2 for ISP-bound traffic.

Q. And that was very different than what was agreed to in North Carolina, correct?

A. At what point agreed to in North Carolina?

Q. The July 19th agreement.

A. What was ultimately signed?

Q. Yes.

A. I'm not sure how you define different. I mean, in the North Carolina agreement signed in July, the parties also agreed to compensate each other at a single rate for ISP and local traffic, and in the Mississippi agreement.

Q. Well, in Mississippi, the parties basically agreed before the FCC's Order on Remand became effective to compensate ISP traffic as if it were local traffic at local rates as you've said in your deposition.

A. It's the same rates as local traffic, yes.

Q. Same rates. And relevant to North Carolina, what did the parties agree to?

A. In the July agreement?

Q. Yes.

A. To compensate each other at the same rate for ISP and local traffic. Well, actually they put in place holder language which said we would implement FCC's ISP Order on Remand which is – that's one of the alternatives set forth in that.

Q. And during the North Carolina negotiations, did not the parties also agree that if the FCC subsequently changes their mind about ISP traffic, the parties will agree and comply with whatever the FCC subsequently says. Isn't that correct?

A. I would have to look at that language. I believe that's correct.

Q. And in Mississippi there wasn't any sort of exclusion. The parties agreed that they were going to compensate ISP traffic during the term of that agreement at local rates regardless of what the FCC said, isn't that correct?

A. At the same set of rates, yes.

Q. Okay. All right. So in other words, the issue about ISP traffic in the Mississippi agreement was pretty much over? Wouldn't you agree with that?

A. For Mississippi, yes.

Q. And in North Carolina it wasn't over. You were still negotiating it at the time you were talking about a new definition of local traffic. And you'd also agree that if the FCC changed its mind subsequently that that agreement will be changed as well, correct?

A. Again, yeah, I would need to look at that language. But, yes, that was an issue that the parties were still negotiating.

[Vol. 2, Tr. 82-85]

The foregoing exchange with Ms. Shiroishi demonstrates that while compensation for calls to ISP's was a dead issue in Mississippi, it remained very much alive in North Carolina. More specifically, in Mississippi the Parties signed their Interconnection Agreement on March 23, 2001, before the FCC's ISP Order April 27, 2001 Order was issued. As such, in Mississippi BellSouth agreed to compensate calls to ISP's at the same rate as for "Local Traffic" during the term of the Interconnection Agreement. *Importantly, BellSouth also waived its right to change the ISP compensation terms in the event the FCC subsequently determined that calls to ISP's were subject to "non-local" compensation rates.* [B.C. Peacock Rebuttal Exhibit No. 5 at P. 21, Section 6.1.3.1][18]

However, in North Carolina the Parties continued to negotiate compensation for calls for ISP's. Thus, Mr. Peacock's Testimony that BellSouth made statements that it needed the "switched access arrangements" language of Section 5.3.1.1 in order to "protect" against subsequent regulatory action made sense, and thus justified the Parties

[18] Section 6.1.3.1 of Attachment 3 to the Mississippi Interconnection Agreement provides: "The Parties recognize and agree that the FCC, courts of competent jurisdiction, or state commissions with jurisdiction over the Parties will issue subsequent decisions on ISP-bound traffic ("Subsequent Decisions"). Notwithstanding any provision in this Agreement to the contrary, the inter-carrier compensation mechanism established in Section 6.1.3 shall continue at the rates set forth in section 6.1.2 for the full term of this Agreement without regard to such Subsequent Decisions, except as provided for in Section 6.1.3.2."

agreeing to a different definition of "Local Traffic" in North Carolina than in Mississippi. Accordingly, Mr. Peacock's Testimony regarding how "regulatory" circumstances in each state impacted interconnection negotiations passes the logic test. Ms. Shiroishi's Testimony does not.

B. BellSouth Would Have The Commission Believe That AT&T Would Not Have Arbitrated the Definition of "Local Traffic."

This is another illogical argument on BellSouth's part. Both Messrs. Peacock and King were adamant that AT&T would have arbitrated the definition of "Local Traffic" had BellSouth not agreed to a LATAwide definition for the same. [Vol. 1, Tr. 53, 98, 182] In this respect, this Commission can judge for itself whether a company of the caliber of AT&T—which was already involved in an arbitration before this Commission—would have waived its right to arbitrate this issue and instead have opted to litigate the issue in complaint proceedings in North Carolina and other states. In fact, AT&T's North Carolina arbitration petition already included thirty-one (31) complex and detailed issues. [B.C. Peacock Rebuttal Exhibit 1] Adding another issue to the list would not have been difficult. Moreover, the fact that AT&T immediately began sending LATAwide "Local Traffic" to BellSouth for termination at the applicable reciprocal compensation rate after the Parties executed the Interconnection Agreement corroborates that AT&T thought BellSouth has agreed to a LATAwide definition of "Local Traffic." Once again, BellSouth's theory of events simply do not pass the logic test.

C. BellSouth's Logic Also Assumes AT&T Would Have Agreed To An Exclusion For "Local Traffic" Which "Swallows the Whole."

Questions posed by Commissioner Kerr to the Parties cannot be improved upon regarding the obvious illogical proposition that AT&T—on the one hand would have achieved its objective of obtaining a LATAwide definition of "Local Traffic," but then on the other hand—would have agreed to an exclusion which would have "swallowed" such definition in its entirety. Consider the following exchange between Commissioner Kerr and Mr. King:

> Q. Let me ask you, first, using Mr. Shore's exhibit, the first sentence, not the underlined part: The parties agree to apply a LATAwide local concept to this attachment three, meaning the traffic that has traditionally been treated as intraLATA toll traffic will now be treated as local for intercarrier compensation purposes.
>
> What did you believe AT&T – what was the benefit to your company of that language? What were you getting that you had not previously gotten from that language?
>
> A. Well, I technically, previously, already had that language in Mississippi.
>
> Q. Right. But let's confine it to North Carolina.
>
> A. So, but you know, what I have there is the ability to have a reduced expense stream on my intraLATA minutes in which I can share to my clients, my business unit clients in order to put better products in place, local products, et cetera, to offer the North Carolina consumers.
>
> Q. If you and I were negotiating that and I understood that to not include – in other words, we were going to treat – this new LATAwide

concept was not going to include any call that went over switched access facilities?

A. Okay.

Q. What would be left that – that you previously didn't have that you were getting if you threw out anything that was switched or went over switched access facilities?

A. What would I have – well, according to BellSouth's interpretation –

Q. What would you be getting? If we adopted Mr. Shore's –

A. I would not have any local compensation at all if I was using a switched access services.

Q. If Mr. Shore's correct, if his interpretation is correct, were you getting anything from that first sentence?

A. I – yes. I was already getting something from that first sentence. I was already using switched access arrangements in my existing network in which I was terminating local calls.

Q. Right. Right.

A. I was applying a PLU. What the LATAwide expansion offered me was obviously to put more calls. It was not just the traditional 7- and 10-digit dialed calls going across the street and calling your neighbor. Now you could call outside the so-called BellSouth traditional calling area but still within the LATA. It was the traditional toll call, just as we stated. What was once traditionally toll is now local for intercarrier compensation.

Q. And that's what you believed you were getting from that LATAwide?

A. Yes, sir.

Q. Okay. Now, if Mr. Shore's correct, was – would you have – would you be getting anything that you didn't already have? You know, if you excluded –

A. I would actually be going backwards. Because according to BellSouth, I would have to reconfigure my network to where if I indeed want to have this type of compensation, I'd have to redirect calls that I am today sending them and redirect them to different trunk groups that they are claiming are not switched access and are willing to give me this LATAwide concept.

[Vol. 1, Tr. 108-111]

Even more telling was Commissioner Kerr's exchange with Ms. Shiroishi regarding the same illogical BellSouth proposition:

Q. Let me ask you, if you would, to look – I don't know what number it is, but anyway, the blow-up that's up there. And we spent a lot of time talking about what – the underlying section there, the clause that follows the comma in the first sentence, and the parties don't seem to agree about what that means. But it appears to me that the parties did agree about what the first clause meant.

We – as I read that, it appears that the agreement to this language is going to result in a transition. In other words it's something that we've been doing things one way before, and now we're going to do them differently, would you agree with that?

A. Yes.

Q. And it says that had traditionally been treated as intraLATA toll will now be treated as local for intercarrier compensation. So we've been doing it one way, and now we're going to do it another way, correct?

A. Correct.

Q. Specifically, what traffic of AT&T's were you referring to as having been traditionally treated as intraLATA toll that would now be treated in this LATAwide local concept?

A. Good question. And I hate it that I have to talk in technical terms, so I'll do that and then back up and –

A. Okay. Well, it might sound like it.

But again, there are different trunking arrangements which are – delve into or are king of a specific term for how the parties route their traffic. And there are things called local toll trunk groups, and there are things that are switched access trunk groups. And they all have modifiers that I won't go into, although I tend to call them LTLT because that's quicker. When you have a local toll trunk group, and traffic – let's say under the first AT&T interconnection agreement, traversed that local toll trunk group, if that call had been billed by AT&T as local, then under the first agreement, that would have been compensated as access --. I'm sorry, I said that wrong. If it had not been billed by AT&T as local, then it would be terminated and the termination paid to BellSouth would be switched access.

Under this definition, those type calls now are no longer subject to access charges on the termination end.

Q. So there would be those type calls plus what you would call a switched access arrangement?

A. Right.

Q. Okay. At the time you were negotiating this language for BellSouth, what did you understand to be the mix of AT&T traffic as between those two types of calls?

A. I don't –

Q. Let's call them type A and type B, because I'll lose track of them. So as between Type A being the local trunk, and type B being the switched access, what was the mix of that traffic?

A. I'm not sure we ever talked about that. I'm almost positive we did not talk about that. And I don't know that I would have had any knowledge about that. Again, AT&T would have, hopefully, been aware of that.

Q. Right. But on behalf of BellSouth, you were negotiating a transition in the billing arrangements that applied to type A, but not the type B –

A. Right.

Q. -- because of the exception language, without having any understanding of the magnitude of what that would mean in terms of revenues or --

A. Not specifics. And, again, this was a definition that we had with other carriers. So AT&T could avail themselves of it through adoption of that issue, even if BellSouth hadn't mutually agreed to it. So that's one of the things in

negotiating that is a bit different in this environment with the 252-I rule.

Q. If AT&T had none of the type A and all or mostly the type B traffic, why would it make sense for them to adopt this language with your interpretation of the exception?

A. Well, I don't know that it would under that. But, again, there is another arm that has the same agreement which is Teleport or TCG, and they do actually have a significant amount of traffic that is traversed under these LTLT or type A trunk groups.

Q. But this wasn't adopted language, this was negotiated language. This was a unique party, AT&T, negotiating this with BellSouth?

A. Right. And we were negotiating AT&T and TCG.

Q. Right. And if you had most – if you had predominately switched access traffic, if I had predominately switched access traffic and you were representing BellSouth and we negotiated this, the exception would really swallow the rule. In other words, we were making a transition, we had been paying access charges for most of our traffic. The first sentence seems to say, well, we're adopting a LATAwide concept, meaning we are going to transition traffic from having paid access to treating it as local. Except all of it or most of it, actually, we're not making any change. I mean, isn't that how your interpretation would work out as a practical matter?

In other words, if the majority of your traffic were switched access?

A. Right.

83

Q. You, basically, in the first half of that sentence would be saying we're going to make this transition and how we're going to treat most of your traffic. Except we're really not, because the exception's going to reach back and swallow this transition we've made. Do you disagree with that as kind of the practical result of your interpretation?

A. Not if that were the case. Unless, like I talked about earlier, the networks, they were looking into, again, separating, you know, TCG would be quite the local type arm with all their LTLT, and ATX would be – I'm sorry, those are ACNAs that I'm talking about – the access arm.

Q. Okay. Thank you.

[Vol. 3, Tr. 53-58]

As these two exchanges demonstrate, it is not logical that AT&T would have obtained a LATAwide definition of "Local Traffic" and then voluntarily would have relinquished such definition.

D. BellSouth's Allegation That The "Interrelated" Language Of Section 5.3.1.1 Relates Only To VOIP Calls Is Based On A Faulty And Illogical Interpretation Of The "Pick and Choose" Rule.

As the Commission will recall, Ms. Shiroishi also argued that the "interrelated" language of Section 5.3.3 related only as to VOIP calls and thus did not "interrelate" to the definition of "Switched Access Traffic" to Section 5.3.1.1. [Vol. 3, Tr. 22] This also is illogical for several reasons.

First, the "interrelated" language of Section 5.3.3 unequivocally states "[t]his Section is interrelated to Section 5.3.1.1." with "Section" being capitalized with a capital "S." Under the rules of contract construction, this

means that all of the Section, and not just the sentence which deal with VOIP calls, is "interrelated" to what constitutes "Local Traffic" as set forth in Section 5.3.1.1.

Second, Ms. Shiroishi herself admitted that VOIP calls do not originate or terminate over "switched access arrangements." [Vol. 2, Tr. 45-47; Vol. 3, Tr. 24] Thus, the "switched access language" of Section 5.3.1.1 provides no bases for "interrelating" the two Sections.

Third, the Parties already had agreed in Section 5.3.3 itself that VOIP calls did not constituted "Switched Access Traffic" as defined in this same Section 5.3.3. Thus, not having VOIP calls defined as "Switched Access Traffic" provides no basis for interrelating the two Sections because Section 5.3.3 stands by itself for the proposition that VOIP calls are not "Switched Access Traffic."

Fourth, the Parties also already had agreed in Section 5.3.3 that VOIP calls which originated in one LATA and terminated in another LATA would not be compensated as "Local Traffic." Thus, not having VOIP calls defined as "Local Traffic" provides no basis for interrelating the two Sections because Section 5.3.3 also stands by itself for the proposition that VOIP calls which are originated in one LATA and terminated in another LATA would not be compensated as "Local Traffic."

Regarding this last point, Ms. Shiroishi attempted to draw a nexus between the need to interrelate the language of Section 5.3.3 regarding VOIP

calls not constituting "Local Traffic" to an "opt-in" situation whereby another competing local provider ("CLP") attempted to adopt this VOIP language under the "pick and choose" rule of Section 252(i) of the Act. Her theory was that in addition to "picking" the VOIP language from Section 5.3.3, the CLP also would have to adopt the language of Section 5.3.1.1 regarding what constituted "Local Traffic."

However, this makes no sense given the odds that BellSouth's interconnection agreement with another CLP already would include its own definition of "Local Traffic." If the CLP only adopted the VOIP language of 5.3.3 without also adopting Section 5.3.1.1, BellSouth still would be fully protected. This is because Section 5.3.3 itself, without reference to Section 5.3.1.1, provides: (1) a definition of "Switched Access Traffic;" (2) that VOIP calls are not "Switched Access Traffic," and (3) VOIP calls which originate in one LATA and terminate in another LATA shall not be compensated as "Local Traffic." Moreover, because as a matter of policy, BellSouth has not agreed to a definition of "Local Traffic" which is greater than the LATA, there would be no logical reason to have a CLP adopt the LATAwide "maximum" definition of "Local Traffic" in Section 5.3.1.1 of the Interconnection Agreement when odds are that the CLP's existing definition of "Local Traffic" is smaller than LATAwide. Thus, the CLP's existing definition of "Local Traffic" would provide an even better definition for BellSouth than the definition of "Local Traffic" in the Interconnection Agreement. As a result,

Ms. Shiroishi's "opt-in" argument is irrelevant because Section 5.3.3 itself provides that VOIP calls from one LATA to another never would be treated as "Local Traffic."

Commissioner Ervin appeared to be as perplexed as AT&T regarding Ms. Shiroishi's logic on this point. His discussion with Ms. Shiroishi was as follows:

> Q. Let's go back to 5.3.1 which is the definition of switched access traffic. I think you agreed, under cross examination from Ms. Cecil, that the interrelationship language that's the last sentence in that provision applies to the entire definition. I think you ultimately agreed to that.
>
> What is your --. It was not clear to me, however, what you understand that interrelationship sentence to mean. When that sentence says that this definition is interrelated to 5.3.1.1, how is it interrelated?
>
> A. That definition, it will –
>
> Q. In other words, how do you content that it's interrelated. I understand there's a dispute.
>
> A. The interrelationship, again would come into play if a carrier, for instance, would ask to adopt the VOIP provisions of AT&T's agreement, but maybe not like their local traffic definition. They wanted a traditional local calling area or BellSouth's local calling area as defined in our tariffs. Then you would have a problem in reconciling what the parties had agreed to on VOIP, which was within the LATA, how we were going to handle it, versus the smaller local calling area.

So that sentence was actually proposed by BellSouth to help us in the case that a carrier said, I want to adopt the VOIP provisions of AT&T's agreement, we would then have a provision that says this is interrelated back to the local traffic definition. So they would also have to adopt that.

Q. There's language in 5.3.3 that deals with subjects other than Voice over Internet Protocol, isn't there?

A. There are. But, again, the language was put in – not until the parties negotiated VOIP.

Q. And I understand that that may be the fact. I'm just trying to understand how we can have language that says that the entire section is interrelated to 5.3.1.1, but only one sentence in a broader paragraph can somehow have any interrelated effect.

You understand my problem?

A. Yes, sir. And again –

Q. Help me.

A. Okay. Again, obviously, hindsight is 2020. And, obviously, after all the things come out, you look at it, and AT&T's position, they've obviously stated here. But the definition of switched access traffic was put into the agreement to deal with whether or not Voice over IP was switched access.

And so, in the context of negotiating that language, the parties did that via a mechanism, or the mechanism we used was to put in that definition of switched access traffic. And, again, it does have the interrelated section back, and that was because BellSouth wanted to insure that if a CLP wanted to adopt

that provision, it would also adopt the local traffic provision.

Q. All right. I mean, I don't purport to be an expert on pick and choose law. And you disclaim being a lawyer, I'm afraid I don't have that ability, I'm afraid I am one, maybe not much of one.

My understanding of the way the pick and choose rules operate is that you just can't take everything in isolation, but you do have to take interrelated provisions; however, they have to be actually interrelated. And just because you say they're interrelated, that doesn't necessarily make them interrelated.

If, in fact, 5.3.1.1 really doesn't have anything to do with Voice over Internet Protocol, because it's not provided over switched access arrangement, or if it doesn't have anything to do with ISP traffic, because ISP traffic isn't provided over switched access arrangement, what is the actual interrelationship between 5.3.3 and 5.3.1.1?

A. Yeah. And, again, you make a good point. You'll notice the interrelated section is not included in 5.3.1.1, because if a carrier came to me and said I want to adopt AT&T's definition of local traffic, I don't have a need for them to take any other section along with that.

In the Voice over IP, again, let's take – let's say, for example, someone said I want to adopt AT&T's Voice over IP provisions. So those provisions state that the parties agree to disagree. However, anything that originates or terminates – or it won't be compensated as local. But that deals with the entire LATA.

If they had --. Let's say, they said, well, that's all I want is just ---

Q. I guess my problem --. I mean I understand your argument, but I guess my problem is, I'm a CLP and I come to you and say, well, I want to adopt this definition or switched access traffic for whatever reason. And you then, say, well, look at the last sentence. It says you've also got to go on 5.3.1.1. And I say no, I don't, because it doesn't have any real actual interrelationship. You may say it does, but it doesn't, as a matter of fact. And I'm prepared to litigate that question.

And we go to litigate it, you come in before my colleagues, what is your argument that there is, in fact, any actual interrelationship so that you're --. I mean, why does that get you anywhere?

A. Well, I think, the scope would be where we would go. Again, we've agreed in this definition that it's anything within the LATA, obviously, with the exclusion of switched access. The VOIP, again, is anything in the LATA. So those two match up, and that's where the interrelationship comes in. We do have language with other carriers that talks about Voice over IP transmissions within the local calling area, or within the traditional local carrier area. Those two provisions of what that scope is going to be, whether it's LATA or whether it's a smaller local calling area, would be the interrelationship.

[Vol. 3, Tr. 64-69]

As Commissioner Ervin's exchange with Ms. Shiroishi establishes, BellSouth cannot have "its cake and eat it too." Either Sections 5.3.1.1 and 5.3.3 are fully "interrelated" or they are not. BellSouth cannot argue that only one or two sentences in Section 5.3.3 are "interrelated" to Section 5.3.1.

and at the same time, argue that none of the provisions of Section 5.3.1.1 are "interrelated" to Section 5.3.3. This also is faulty logic.

E. BellSouth's Argument That Other CLP's Have The Same Definition Of "Local Traffic," But Yet Have Not Claimed "Local Traffic" Includes All LATAwide Traffic Also Is Based On Faulty Logic.

Obviously, it is relevant whether other CLP's have the same definition of "Local Traffic" in their interconnection agreements unless these interconnection agreements also contain the same definition of "Switched Access Traffic." However, Ms. Shiroishi advised the Commission that it should not be concerned regarding such determination. She stated:

> Q. Okay. I think what I heard at the beginning of your answer, and I don't want to cut it short, is that you said the Commission should just look at the definition [of "Local Traffic"] in this agreement and this agreement, and you don't have to look at all of the terms of the agreement. Is that correct?
>
> A. Yes. My answer was that the value of evaluating those other definitions.

[Vol. 3 , Tr. 20-21]

As BellSouth never proved that any of the interconnection agreements which it has with other CLP's have the identical provisions as to both Sections 5.3.1.1 and 5.3.3 of the Interconnection Agreement, BellSouth's argument is irrelevant as to how other CLP's have interpreted what constitutes "Local Traffic."

F. BellSouth's Logic That AT&T Agreed To "Convert" Or "Migrate" Its Existing Network Architecture To "Local Interconnection Trunks" In Order To Have Its Traffic Transported And Terminated As "Local Traffic" Also Is Faulty.

Because the literal and unambiguous provisions of Section 5.3.1.1 and 5.3.3 do not support BellSouth's arguments regarding what constitutes "Local Traffic," BellSouth attempts to find other contract provisions to support its case. As Ms. Shiroishi testified:

> Further, the definition in the [Interconnection] Agreement related to the type of arrangement, or trunk group, that the traffic originated over or terminated through. As such, the parties included a provision in the Interconnection Trunking and Routing section (Section 3) of Attachment 3 that addressed this conversion.
>
> Section 3.1. states: The Parties will convert all existing interconnection arrangements and trunks to the interconnection arrangements described in this Attachment in accordance with this following...
>
> The Section goes on to give technical specifications as well as process information about starting the conversion. Further, and of important note, are the trunking arrangements described in the interconnection agreement. Sections 3.3.1, 3.17.1, 3.1.1, 3.19.1, and 3.20.1 describe the trunking arrangements that are available via this interconnection agreement. The descriptions of the trunking arrangements make clear that they are for local and intraLATA toll traffic, and the trunking arrangements set forth in BellSouth's tariffs. Further, there is no provision in the interconnection agreement allowing for the combination of switched access arrangements with the interconnection arrangements set for in the interconnection agreement.

[Vol. 2, Tr. 41-42]

As both Messrs. Peacock and King testified, there is absolutely no language in the Interconnection Agreement which support Ms. Shiroishi's conclusions – absolutely none. Moreover, Mr. King specifically testified:

> In fact, Mr. Peacock and I never discussed any "migration" or "conversion" requirements in Attachment 3 that would affect AT&T. I feel confident he would have done so had Ms. Shiroishi explained her "interpretation" of these provisions to him as she has testified in this proceeding.
>
> Ms. Shiroishi is suggesting that AT&T replace many of its existing facilities, which AT&T implemented over many years to operate a combined local and long distance network, to local facilities. This would be an inefficient and expensive endeavor and Ms. Shiroishi knows that. In this respect, her interpretation of AT&T's trunking "requirements" under the Interconnection Agreement (in order to have AT&T's "local traffic" considered "Local Traffic") are akin to the proverbial "poison pill." It certainly was never AT&T's understanding or intent that it would need to engage in a wholesale rebuilding of its combined local and long distance network in order to have its "local traffic" to be considered "Local Traffic" under Interconnection Agreement for local reciprocal compensation purposes. Moreover, BellSouth also would experience increase costs to implement such a "migrated" or "converted" network. Those sections from the Interconnection Agreement referred by Ms. Shiroishi in her Direct Testimony allow BellSouth to request AT&T to implement any such "migration" or "conversion." To date, BellSouth has never made any such request of AT&T.

[Vol. 1 , Tr. 64-65]

The faulty logic in BellSouth's arguments can be seen from the following exchange with Ms. Shiroishi:

> Q. I want to talk to you about your testimony where

you talked about other language in the agreement which supports your understanding as to what switched access arrangements would be. And you referred the Commission to various provisions from Attachment 3 that talk about interconnection trunking, correct?

A. Yes.

Q. And I think as we discussed in your deposition, as you interpret that language, AT&T would have to take all of its local traffic and route it only over local trunks, is that correct?

A. Again, "have to," that's a hard phrase for me to answer to. What the definition says is that how – how AT&T and BellSouth route that traffic is going to be determinant of the compensation that's paid for it.

Q. Well, and I don't want to be argumentative, but in order for AT&T to have its local traffic compensated at local compensation rates, it would have to, according to you, route, that traffic over a local-only trunk, is that correct?

A. Yeah. And, actually, the trunks in an industry are called local toll trunks. There are local only, but there're are local toll trunks that are referred to as LTLT trunk groups. And so that, as well as a trunk type that would be utilized, and would, under this definition, qualify for reciprocal compensation rates.

Q. But you could not run it over whatever a switched access arrangement is, it would have to be this local trunk, correct?

A. Correct.

Q. And are you aware that AT&T currently, and has in the past, sent traffic to BellSouth, which would be intraLATA, interLATA and local, over

the same trunk group?

A. I'm aware of that because in the deposition we talked about that, yes.

Q. Now, you agreed with me in your deposition that it is technically feasible for AT&T to send all of its kinds of traffic over one trunk group?

A. For termination, yes.

Q. Termination, right.

And did you read Mr. King's testimony where he said to take advantage or to put everything over a local trunk group would be a massive undertaking or a significant undertaking for AT&T?

A. I saw that part of his testimony, yes.

Q. And did that surprise you that he took that position?

A. Not since the parties have had discussions. Obviously, prior to this coming to a complaint proceeding, the parties have discussed the issue after we realized the disagreement. So I had heard Mr. King say that before.

Q. And that's consistent because at the time you were negotiating this language, including these provisions about interconnection, you admitted that you didn't know much about AT&T's network, did you?

A. Right. When I negotiate, again, the parties who come to the table are there to represent and bring to the table their network architecture, their issues, and I'm there to represent BellSouth.

Q. And those positions in that Attachment 3 that

you refer to, they refer to a conversion taking place, that the parties are to convert existing facilities to facilities that are described in this Attachment 3. Remember that?

A. Yeah. I believe it says upon either party's request.

Q. Right. Now, has BellSouth asked AT&T to do any conversion of any trunks since second interconnection agreement was signed?

A. No. Again, a conversion wouldn't be necessary. The language sets out how compensation is going to work. To the extent AT&T wanted some type of conversion to effectuate how compensation works or change that, then they could request that as well.

[Vol. 3, Tr. 36-39]

BellSouth's position particularly is illogical given that Mr. King testified that previously AT&T has sent "Local Traffic" to BellSouth over "switched access arrangements" which BellSouth transported and terminated at reciprocal compensation rates:

> Several years ago, in an effort to offer local services to various business customers, AT&T began offering local service using 4ESS (TM) switched and related facilities which traditionally had been used to provide long distance services. BellSouth has in the past, and it continues today under the Interconnection Agreement, to charge AT&T local reciprocal compensation rates for calls which are transported over these facilities. For compensation billing purposes, AT&T provides BellSouth a Percent Local Usage ("PLU") factor in order to determine what portion of AT&T's traffic is "Local Traffic" versus "Switched Access Traffic." This factor changes from time to time as traffic levels and types

vary.

[Vol. 1, Tr. 62]

Thus there is no conclusion to reach regarding BellSouth's "interconnection trunk" argument other than it makes no sense considering the circumstances under which the Parties executed the Agreement as required under Georgia law, (*see*, Maiz and St. Charles Food). In this respect, there is no way the Commission logically can conclude that AT&T would have agreed to a complete reconfiguration of its network in order to have its traffic transported and terminated by BellSouth as "Local Traffic." Moreover, the provisions of the Interconnection Agreement do not provide that AT&T is obligated to "migrate" or "convert" its existing facilities to "local interconnection trunks" under Attachment 3.

G. The Reason BellSouth Proposes Its Interpretation of "Switched Access Arrangements" Is To Gain A Competitive Advantage Over AT&T In The Local Telephone Market.

The most interesting exchange with Ms. Shiroishi regarding interconnection trunking finally explained why BellSouth allegedly agreed to a LATAwide definition of "Local Traffic" in Section 5.3.1.1, except for calls that are originated or terminated over "switched access arrangements." In this respect, BellSouth argues "switched access arrangements" involve transporting traffic over "switched access trunks." [Vol. 2, Tr. 41-42] BellSouth knows that AT&T uses a mixture of "switched access trunks" and "local interconnection trunks," as AT&T has been attempting to use its

historical long distance network to offer local service. Specifically, at the end of the hearing, Ms. Shiroishi testified:

> Q. Now, Ms. Shiroishi, you understand from reading Mr. King's testimony, hearing him testify, that AT&T has a combined local and long distance network, correct?
>
> A. Yes.
>
> Q. BellSouth doesn't. You only have a local network, right?
>
> A. Right. Our long distance network is handled, obviously, through BSLD, a separate affiliate.
>
> Q. Right. You resell somebody else's long distance service, you don't have long distance switches anywhere in the country, do you?
>
> A. Not to my knowledge.
>
> Q. So, it's not going to be any problem for you to run all of your traffic on a local interconnection trunk, because that's all you have right?
>
> A. Correct.
>
> Q. And so when AT&T terminates those calls that come from your customers over those local trunks, you're getting that at local reciprocal comp rates, aren't you?
>
> A. Right. Pursuant to the definition, it does qualify, yes.
>
> Q. Because you don't have – you're not running through switched access arrangements because you don't have to, right?
>
> A. Well, we don't have any, no.

Q. That's right.

So AT&T, which is trying to get in the local market, and trying to use an efficient long distance local network, they can't; they're not on equal footing with respect to how local – you're interpreting this agreement, are they?

A. Well, I don't think that it's fair to say they're not on equal footing. I mean we talked about earlier about the fact BellSouth has different local traffic definitions. I gave you an example of three. There are actually more than that out there. It's kind of like cellular plans today. I could walk into AT&T wireless and ask for a plan that has, you know, a thousand daytime minutes, and no night and weekends, because I know that's when I'm going to use it. Or I might need no daytime and lots of nights and weekends. That's kind of how our local traffic definitions are. We have multiple flavors available, and they're out there as an option.

To the extent that we can negotiate something mutually, that's always an option. Or through the 252-I provisions, AT&T could adopt anyone else's definition of local traffic. So whether or not --. You know, we do have different definitions to help fit different CLPs' models of what they want and how they want that to work.

Q. Right now AT&T and BellSouth are going head to head competing in the local market here in North Carolina, right?

A. Correct.

Q. But you're always going to have an advantage in your pricing by virtue of how your network is established, and how you interpret this provision in the contract, isn't that correct?

A. Well, I don't know that I'd say that's an advantage or not. Again, that depends on how AT&T is configured, how its network is, and what definition of local traffic that is chooses to have in its interconnection agreement with BellSouth.

Q. Right. And the point would be, AT&T would have to take all of its existing network and convert it into a local network to be on the same level playing field that you now have by virtue of how you're interpreting that provision?

A. Again, there are local toll trunks available that AT&T – or TCG or Teleport have. So that's another option of how they route that for termination.

Q. But AT&T has told you that they're routing, as much as they possibly can, local traffic using a much of their existing long distance network as possible. You know that, don't you?

A. I know that subsequent to the agreement being signed because it's been raised as an issue. But, again, the parties agree to a definition that says what it says. There are other definitions available. Even at this date, if AT&T were to say, don't like this definition any more, I want a new one, they could adopt a provision from any other agreement. Now, obviously, that doesn't take care of our problem up to date, but going forward.

[Vol. 3, Tr. 40-43]

As the foregoing exchange established, the truth finally came out regarding BellSouth's affinity for the "switched access arrangements" language as set forth in Section 5.3.1.1. In reality, this affinity is nothing more than BellSouth's well camouflaged attempt to gain a competitive

advantage over AT&T based on BellSouth's "local network" architecture. The Commission should not condone such subterfuge and competitive gamesmanship. Instead, it should consider this affinity as just one of the many circumstances to be considered by the Commission under Georgia law when interpreting the dispute between the Parties regarding what constitutes "Local Traffic" under the Interconnection Agreement.

CONCLUSION

Resolving interconnection disputes is always a daunting task, particularly in proceedings like the one at hand where "extrinsic" or parol evidence is being considered, multiple contract provisions are involved, and the testimony of various witnesses is widely divergent. Given these challenges, the Commission first should attempt to resolve this dispute using the literal words of the contract "as a whole" in accordance with the various rules of contract construction which previously have been discussed. In considering "extrinsic" or parol evidence in order to resolve an ambiguity, the Commission should test the credibility of the witnesses by looking for confirmation of statements and events through documents which are available to the Commission. Additionally, and perhaps most importantly, it should use common sense and logic in determining the likelihood as to whether events occurred as represented.

AT&T appreciates the Commission's efforts in this proceeding and awaits the Commission's Order resolving this dispute.

Respectfully submitted, this 4th day of April, 2003.

By: Loretta A. Cecil, /DPR

Loretta A. Cecil, Esq.
Womble Carlyle Sandridge & Rice LLP
1201 W. Peachtree Street
Suite 3500
Atlanta, GA 30309

Attorney for:
AT&T Communications of the Southern States, LLC, Teleport Communications Group, Inc. and TCG of the Carolinas, Inc.

CERTIFICATE OF SERVICE

I HEREBY CERTIFY that I have served a copy of AT&T'S BRIEF on behalf of AT&T Communications of the Southern States, LLC, Teleport Communications Group, Inc., and TCG of the Carolinas, Inc. on all parties of record by placing a copy of the same in the U.S. Mail, postage prepaid.

This the 4th day of April, 2003

Loretta A. Cecil
/spm

Ed Rankin, III, Esq.
BellSouth Telecommunications, Inc.
1521 BellSouth Plaza
P. O. Box 30188
Charlotte, NC 28230

Andrew Shore, Esq.
BellSouth Telecommunications, Inc.
675 W. Peachtree Street
Suite 4300
Atlanta, GA 30375

PUBLIC STAFF
Robert P. Gruber
Executive Director
Antoinette R. Wike, Chief Counsel
Robert B. Cauthen, Jr., Staff Attorney
4326 Mail Service Center
Raleigh, NC 27699-4326

BellSouth Telecommunications, Inc.
Legal Department
1521 BellSouth Plaza
P. O. Box 30188
Charlotte, NC 28230

edward.rankin@bellsouth.com

Edward L. Rankin, III
General Counsel-North Carolina

704 417 8833
Fax 704 417 9389

FILED
APR 04 2003
Clerk's Office
N.C. Utilities Commission

April 4, 2003

Ms. Geneva S. Thigpen
Chief Clerk
North Carolina Utilities Commission
4325 Mail Service Center
Raleigh, NC 27699-4325

OFFICIAL COPY

Clerk-PS
AG
Comm
Jennink
Long
Kite
Sessoms
Paschal
Wisfall
Kelly
ExDir
3PS Legal
3PS Acctg
2PS Eclkes
3PS Comm
ConsServ.

Re: Docket No. P-55, Sub 1376

Dear Ms. Thigpen:

I enclose for filing in the above-referenced docket the original and 31 copies of BellSouth Telecommunications, Inc.'s Post-Hearing Brief. Please stamp the extra copy of this letter "Filed" and return it to me in the usual manner.

Thank you for your assistance in this matter.

Sincerely,

Edward L. Rankin, III

Edward L. Rankin, III

ELR/db
Enclosures

cc Parties of record

104

BEFORE THE

NORTH CAROLINA UTILITIES COMMISSION

OFFICIAL COP

FILED

APR 04 2003

Clerk's Office
N.C. Utilities Commission

In the Matter of:

AT&T Communications of the Southern States, LLC, Teleport Communications Group, Inc., and TCG of the Carolinas, Inc.,	)	
Complainants,	)	Docket No. P-55, Sub 1376
v.	)	
BellSouth Telecommunications, Inc.,	)	
Respondent.	)	

BELLSOUTH'S POST-HEARING BRIEF

BellSouth Telecommunications, Inc. ("BellSouth"), by and through its undersigned counsel, hereby files this post-hearing brief.

INTRODUCTION

AT&T asks this Commission to order BellSouth to (1) refund AT&T more than $2.5 million AT&T paid BellSouth during the first fifteen months of the parties' current interconnection agreement for terminating intraLATA traffic AT&T originated and terminated over switched access arrangements purchased out of BellSouth's North Carolina Switched Access Tariff, and (2) begin charging AT&T reciprocal compensation rather than switched access rates for such traffic for the remainder of the three year contract term. The Commission must determine whether the parties agreed to treat the traffic at issue as "local traffic" for purposes of inter-carrier compensation, because local traffic is compensated at reciprocal compensation rates, and non-local traffic is compensated at higher switched access rates. The fact is, however, that this should not even be a disputed issue. The Interconnection Agreement

between BellSouth and AT&T *expressly and specifically* states that intraLATA calls originated or terminated over switched access arrangements are *not* "local traffic."

The inventive arguments and linguistic machinations put forth by AT&T as to why the Commission should ascribe a contrary meaning to the contract do not support the interpretation of the agreement that AT&T seeks. First and foremost, AT&T's arguments contravene the express terms of the contract. Second, AT&T's interpretation of the agreement impermissibly violates a bedrock rule of contract construction, because it renders meaningless the contract's express exclusion from the local traffic definition for calls carried over switched access arrangements. Third, if the Commission determines that the exclusion for calls carried over switched access arrangements is ambiguous and that it is, therefore, appropriate to consider extrinsic evidence regarding the meaning of the agreement, the evidence demonstrates conclusively that the parties intended at the time of contracting to exclude intraLATA calls carried over switched access arrangements from the definition of local traffic. AT&T's post-hoc explanation of the supposed purpose of the exclusion for switched access arrangements, as well as its version of the facts surrounding the parties' negotiation of the pertinent contract language, are not credible. AT&T's witnesses contradicted themselves and each other and offered an implausible theory for the purported reason for the contractual exclusion. AT&T, to be certain, has not carried its burden of proving that BellSouth agreed to treat intraLATA calls transmitted via switched access arrangements as local traffic for purposes of inter-carrier compensation. Consequently, the Commission should deny AT&T's requests for a multi-million dollar refund from BellSouth and for lower rates than the parties' contract requires AT&T to pay BellSouth for terminating AT&T's switched access traffic.

SUMMARY OF ARGUMENT

The Commission should deny the substantial rebate and other relief AT&T seeks for the following reasons:

1. The Interconnection Agreement specifically and unambiguously excludes intraLATA calls originated or terminated through switched access arrangements from the definition of local traffic.

    a. The term "switched access arrangements" is commonly understood to mean facilities used to provide switched access services offered via tariffs; it is used in that manner in Bellsouth's North Carolina Access Service Tariff; and AT&T had a consistent understanding of the term at the time it executed the Interconnection Agreement.

    b. The phrase "switched access arrangements" is not synonymous with or limited by the term "Switched Access Traffic" as the latter term is defined elsewhere in the Agreement.

2. AT&T's claim that that the exclusion for calls carried over switched access arrangements excludes only *inter*LATA calls from the definition of "local traffic" violates the fundamental principle of contract construction that mandates that all terms of a contract are to be given meaning, because, as AT&T acknowledges, *inter*LATA calls are *never* considered local.

3. AT&T's claim that the exception for calls carried over switched access arrangements excludes only interLATA calls from the definition of local traffic also is inconsistent with the testimony of AT&T's lead contract negotiator that the exclusion applies to *all* access calls.

4. If the Commission determines that the definition of local traffic in the Interconnection Agreement is ambiguous, the extrinsic evidence demonstrates conclusively that the parties intended at the time of contracting to exclude intraLATA calls carried over switched access arrangements from the definition of local traffic.

    a. The Commission should not determine that the Agreement is ambiguous simply because AT&T conjured up an argument as to why the exclusion does not actually mean what it says.

    b. BellSouth specifically told AT&T before AT&T agreed to the language that it excluded intraLATA calls carried over switched access arrangements from the definition of local traffic, and AT&T did not object.

c. AT&T's explanation for the "switched access arrangements" exception is implausible, and the testimony of its witnesses is inconsistent and not credible.

d. AT&T's claim that the documentary evidence favors AT&T is false -- AT&T did not produce a single document that supports its story.

e. AT&T agreed to include other language in the Interconnection Agreement that wholly undermines its contention that it believed that intraLATA calls carried over switched access arrangements would be treated as local traffic.

f. AT&T's claim that the definition of "local traffic" in the parties' Mississippi Interconnection Agreement means the same thing as the definition in the North Carolina Interconnection Agreement is misplaced – The Mississippi Agreement does not contain an exclusion for calls carried over switched access arrangements, and the North Carolina Agreement indisputably does.

g. No other CLP with the same definition of "local traffic" in its interconnection agreement with BellSouth has taken the position that intraLATA calls carried over switched access arrangements are local calls subject to reciprocal compensation rates.

STATEMENT OF PERTINENT FACTS

In the first interconnection agreement between BellSouth and AT&T, which became effective April 28, 1997, ("First Agreement" or "1997 Agreement"), the parties agreed that "local traffic" "means any telephone call that originates and terminates in the same LATA and is billed by the originating Party as a local call." 1997 Agreement, Att. 11, at 6.[1] So, for example, if an AT&T customer made an intraLATA toll call to a BellSouth customer and AT&T billed its customer toll rates, then AT&T would pay BellSouth switched access rates for terminating that call, and not reciprocal compensation rates. Tr. Vol. 1 at 202-03. The 1997 Agreement contained a three-year term. It also provided that if the parties had not executed a

[1] The Commission took judicial notice of both the 1997 Agreement and the subsequent 2001 interconnection agreement between BellSouth and AT&T, both of which are on file with the Commission, as well as the parties' March 2001 Mississippi agreement, a copy of which was provided to the Commission. *See* Tr. Vol. 1 at 7-8.

second interconnection agreement before the first agreement expired on April 28, 2000, that the first agreement would remain in effect until execution of a subsequent agreement, but that the terms of the second agreement would be retroactive to the day following expiration of the first agreement. *Id.* at 34.

In 1999, BellSouth and AT&T began negotiating on a region-wide basis the terms of second interconnection agreements in all BellSouth states. Tr. Vol. 1 at 165. The parties were not able to agree on all terms of the second agreements, however, and AT&T filed arbitration petitions pursuant to the Telecommunications Act of 1996 in eight of the nine states where BellSouth operates as an incumbent local exchange carrier. The parties agreed that they did not want to arbitrate in Mississippi, and they reached a negotiated agreement on all terms for the interconnection agreement governing their relationship in that State. Tr. Vol. 2 at 87. The parties thus ended up with one set of negotiated language in Mississippi and another set of language for the other eight states. Peacock Depo. at 23-24.

One of the issues upon which the parties initially did not agree (except in Mississippi, where BellSouth was willing to compromise in order to avoid arbitration) was the definition of local traffic. With its petition for arbitration filed in North Carolina on April 27, 2000, AT&T submitted proposed contract language that stated that the parties would bill each other reciprocal compensation for "all local and intraLATA toll traffic originated by one party and terminated to the other party." Tr. Vol. 1 at 164. BellSouth attached proposed language to its May 22, 2000 response to AT&T's arbitration petition that stated that "Local Traffic means any telephone call that originates and terminates in the same LATA and is billed by the originating Party as a local call." *See* BellSouth Cross Ex. 5; Tr. Vol. 1 at 204-05. Notwithstanding the parties' differing positions on this issue, AT&T did not ask the Commission to arbitrate the

definition of local traffic. Tr. Vol. 1 at 206. This Commission conducted an arbitration of the disputed issues in July/August 2000, and issued its arbitration decision in March 2001.

In March 2001, BellSouth and AT&T executed the fully negotiated Mississippi interconnection agreement. It defines "local traffic" broadly as "any telephone call that originates and terminates in the same LATA." Att. 3, § 6.1.1. There is no exclusion for calls carried over switched access arrangements (or any other types of intraLATA calls).

The parties thereafter set out finalizing their other agreements, for which the various state commissions, including this one, had issued arbitration decisions with respect to the disputed issues raised by the parties. On May 22, 2001, BellSouth proposed a LATAwide definition of local traffic, but with an express exclusion for calls carried over switched access arrangements, for inclusion in the AT&T North Carolina agreement, like it had in interconnection agreements with other CLPs. Tr. Vol. 1 at 210-11; *see* BellSouth Cross Exs. 2, 7. Specifically, BellSouth proposed that the parties define local traffic as "any telephone call that originates and terminates in the same LATA except for those calls that are originated or terminated through switched access arrangements as established by the ruling regulatory body." The parties discussed this proposal in meetings in June and July 2001 and specifically discussed the fact that the language excluded from the definition of "local traffic" intraLATA calls that originated or terminated through switched access arrangements. Tr. Vol. 1 at 211; Vol. 3 at 36. AT&T never asked BellSouth what the term "switched access arrangement" meant and AT&T did not discuss the issue internally. Tr. Vol. 1 at 212-13. AT&T knew that "switched access arrangements" referred to the facilities used to provide switched access services purchased out of tariffs. Tr. Vol. 1 at 83-84, 213-14. AT&T requested that the phrase "as established by the ruling regulatory body" be revised to read "as established by the State Commission or FCC" given the

fact that those are the specific regulatory bodies that establish or approve pursuant to tariff switched access arrangements, and BellSouth agreed to that minor modification. Tr. Vol. 1 at 212; Vol. 3. at 37.

BellSouth and AT&T thereafter executed the North Carolina agreement and it became effective July 19, 2001 ("Interconnection Agreement" or "Second Agreement").[2] More than a year later, on August 26, 2002, AT&T filed its complaint initiating this proceeding seeking a refund of monies paid BellSouth for transporting and terminating calls placed over switched access arrangements, and to reduce its payment obligations on a prospective basis.

LEGAL ARGUMENT

I. THE INTERCONNECTION AGREEMENT SPECIFICALLY AND UNAMBIGUOUSLY EXCLUDES INTRALATA CALLS CARRIED OVER SWITCHED ACCESS ARRANGEMENTS FROM THE DEFINITION OF "LOCAL TRAFFIC."

"Where the language of the contract is plain, unambiguous, and capable of only one reasonable interpretation, construction of the contract is not permitted, and the language of the contract is given effect." *Strozzo v. Sea Island Bank*, 521 S.E.2d 392, 396 (Ga. App. 1999) (citation omitted).[3] "To be ambiguous, a word or phrase must be of uncertain meaning and fairly understood in multiple ways." *Resolution Trust Corp. v. Artley*, 24 F.3d 1363, 1366 (11th Cir. 1994)(citations omitted). The test is what a reasonable person would understand the contract term to mean. *See Artley*, 24 F.3d at 1366. "Words generally bear their usual and

[2] They later amended the agreement in order to incorporate the FCC's ISP Order on Remand, which ruled that traffic terminated to internet service providers ("ISP's") was predominately interstate in nature, but the provisions at issue here were not altered.

[3] The parties agreed that the contract would be construed and enforced in accordance with Georgia law. Interconnection Agreement § 24.6.1.

common signification; . . . words used in a particular trade or business will be construed, generally, to be used in reference to this particular meaning." Ga. Code Ann. § 13-2-2(2).

The Interconnection Agreement unambiguously says that all intraLATA calls will be treated as local and, therefore, subject to reciprocal compensation rates rather than switched access rates, *except* those intraLATA calls that are carried over switched access arrangements. It states:

> The Parties **agree** to apply a **"LATAwide" local** concept to this Attachment 3, meaning traffic that has traditionally been treated as **intraLATA** toll traffic will now be **treated as local** for intercarrier compensation purposes, **except those calls that are originated or terminated through switched access arrangements** as established by the State Commission or FCC.

Att. 3 § 5.3.1 (emphasis added). AT&T has manufactured this dispute by contending that the subject of the except clause -- "calls that are originated or terminated through switched access arrangements as established by the State Commission or FCC" -- means something different than the commonly understood meaning of the phrase, which is consistent with how *both* parties understood the phrase at the time of contracting.

A. The term "switched access arrangements" is commonly understood to mean facilities used to provide switched access services offered via tariffs; it is used in that manner in Bellsouth North Carolina Access Service Tariff; and AT&T had a consistent understanding of the term at the time it executed the Interconnection Agreement.

The term "switched access arrangements" is not defined in nor found at any place in the Interconnection Agreement other than in section 5.3.1.1 of Attachment 3. Tr. Vol. 1 at 78. It is, however, commonly understood in the telecommunications industry that "switched access arrangements" are the facilities used to provide switched access service, the terms and rates for which are set forth in tariffs subject to the jurisdiction and approval of state commissions and the FCC. Tr. Vol. 1 at 79, 84. The phrase "switched access arrangements" appears throughout

BellSouth's North Carolina Switched Access Tariff. The introductory portion of the tariff states that BellSouth's switched access service is provided in various switched access feature group *arrangements* that are differentiated by the type of connection and access calling pattern. Tr. Vol. 1 at 80-82; BellSouth North Carolina Access Service Tariff, § E6.1 (BellSouth Cross Ex. 1). Section E6.1.1 of the tariff is titled "BellSouth Switched Access Feature Group Arrangements," and it describes the configuration of facilities that make up each type of switched access arrangement. Tr. Vol. 1 at 82.

AT&T purchases switched access arrangements from BellSouth pursuant to this tariff. Tr. Vol. 1 at 83. It is the intraLATA calls carried over those switched access arrangements that are the subject of this dispute. The only *reasonable* interpretation of the term "switched access arrangements as established by this Commission" is that it refers to those facilities that AT&T purchases pursuant to BellSouth's commission-approved Switched Access Tariff.

Significantly, that is what AT&T understood the term to mean at the time it executed the Interconnection Agreement. Both AT&T's contract negotiator, Mr. Peacock, and the person at AT&T with responsibility for inter-carrier compensation, Mr. King, testified that they knew at the time BellSouth proposed the above language and before the parties executed the Interconnection Agreement that a "switched access arrangement" is a facility "purchased out of the switched access tariff." Tr. Vol. 1 at 84, 213-14. It is, therefore, not surprising that AT&T never asked BellSouth what was meant by the term "switched access arrangements" nor had any internal discussions regarding the meaning of the term. Tr. Vol. 1 at 212-13. The fact that both parties ascribed the one commonly understood meaning to the term is convincing proof that the term "switched access arrangements" is *not* ambiguous. It undoubtedly refers to facilities purchased out of Commission approved Switched Access Tariffs.

B. **The phrase "switched access arrangements" is not synonymous with or limited by the term "Switched Access Traffic" as the latter term is defined elsewhere in the Interconnection Agreement.**

AT&T contends that the Interconnection Agreement "clearly and unambiguously" states that *all* intraLATA calls, including those that traverse switched access arrangements, are "local traffic" because "calls that are originated or terminated through switched access arrangements" in section 5.3.1 of Attachment 3 of the Interconnection Agreement "clearly means" "Switched Access Traffic" as that term is defined in section 5.3.3 of Attachment 3. AT&T's claim that the Interconnection Agreement is unambiguous in that regard fails for several reasons. First, the contract clause that contains the definition of "local traffic," section 5.3.1.1 of Attachment 3, does not use the defined term "Switched Access Traffic." Tr. Vol. 1 at 15. Second, the Interconnection Agreement states that "certain terms have been defined in the body of the Agreement to encompass meanings that may differ from, or be in addition to, the normal connotation of the defined word. . . . A defined word intended to convey its special meaning is capitalized when used." Interconnection Agreement, p. 4. The term "switched access arrangements" is *not* capitalized. Tr. Vol. 1 at 15. Consequently, it must be interpreted as it is normally understood, and not to be synonymous with a different, specially defined term. Third, the definition of "local traffic" in section 5.3.1.1 speaks solely in terms of *intra*LATA traffic, whereas the definition of "Switched Access Traffic" in section 5.3.3 speaks solely in terms of *inter*LATA traffic. AT&T's claim that the contract says that all intraLATA traffic is local except for a certain category of traffic, but that certain category does not include *any* intraLATA traffic, is not reasonable.

AT&T claims incorrectly that the definition of "Switched Access Traffic" in section 5.3.3 governs what constitutes a "switched access arrangement" pursuant to section 5.3.1.1 because

the last sentence of section 5.3.3 states that section "is interrelated to section 5.3.1.1." The two contract provisions deal with two different issues. Section 5.3.3 addresses the treatment of voice-over-internet protocol ("VOIP") calls. VOIP calls, including those that cross LATA boundaries, generally are not routed over switched access arrangements like other interLATA calls. Tr. Vol. 2 at 46. The issue BellSouth and AT&T faced when negotiating how to deal with VOIP calls was whether they should, nevertheless, be subject to switched access rates. Tr. Vol. 2 at 46. AT&T argued that they should be subject to lower local reciprocal compensation rates. The parties agreed that VOIP calls that originate and terminate in different LATAs would not be compensated as local calls, and that they would abide by any subsequent FCC decisions regarding the jurisdictional nature and appropriate compensation for VOIP calls. Tr. Vol. 2 at 40-41.

It is undisputed that *BellSouth* added the "interrelated" language to section 5.3.3 so that a CLP seeking to adopt that provision from the AT&T-BellSouth Interconnection Agreement addressing VOIP calls would also have to adopt the definition of "local traffic" set forth in section 5.3.1.1. Tr. Vol. 3 at 65. Section 252(i) of the 1996 Act allows CLPs to adopt terms from another CLP's interconnection agreement, but permits the ILEC to insist that it also adopt all terms "legitimately related" to that term. 47 U.S.C. § 252(i). Ms. Shiroishi explained that the reference to local traffic in the VOIP clause needed to match the definition of local traffic in the agreement. For example, if the parties had agreed that that "local traffic" would be traffic that originated and terminated in the traditional calling area, then the VOIP provision would also need to state that VOIP transmissions that originate and terminate in different local calling areas would not be treated as local, rather than stating that VOIP transmissions that originate and terminate in different LATAs would not be treated as "local traffic." Tr. Vol. 2 at 47. BellSouth

therefore added the interrelated language so that a CLP adopting the section addressing VOIP calls would have the same definition of "local traffic" as in the AT&T agreement and avoid a potential inconsistency between the adopting carrier's definition of local traffic and its application in the context of VOIP transmissions, which would occur if the adopting carrier's agreement defined local traffic as BellSouth and AT&T had defined that term in their first interconnection agreement or was otherwise inconsistent with the definition of the term in the second interconnection agreement. Tr. Vol. 2 at 47; Tr. Vol. 3 at 64-65, 68-69.

Notably, section 5.3.1.1 does not state that it is interrelated to section 5.3.3. Thus, another CLP could adopt the definition of "local traffic" and corresponding exclusion for calls carried over switched access arrangements in the BellSouth-AT&T Interconnection Agreement without also having to adopt the provision addressing the treatment of VOIP calls.[4] In that case, according to AT&T's theory, the exact definition of local traffic would mean one thing in the AT&T agreement and another thing in the adopting CLP's agreement, because the second CLP would have not have the language in its contract addressing VOIP transmissions that AT&T contends limits the commonly understood meaning of "switched access arrangements." That absurd result is the byproduct of AT&T's linguistic machinations. It has nothing to do with the parties' agreement on how to treat calls traversing switched access arrangements, and everything to do with AT&T attempting to wiggle out of a contract it determined after-the-fact that it does not like. The Commission should not adopt a theory that leads to such an absurd result.

Finally, the fact that one provision in an interconnection agreement is related to another provision in the agreement does not mean that a term specifically defined in one section has the

[4] This is not an unlikely scenario, because some CLPs do not originate VOIP transmissions.

same meaning as a different term used in another section. Yet that is the precise leap AT&T is asking this Commission to make. Indeed, AT&T claims that a term defined in one place in the contract *unambiguously* means the same thing as a different term appearing elsewhere in the contract. The Interconnection Agreement, to be certain, does not unambiguously state that "Switched Access Traffic" limits the commonly understood meaning of "switched access arrangements." Quite to the contrary, the Interconnection Agreement is clear that defined terms have their specially defined meaning only when the *same term* is used and capitalized, and that intraLATA calls that traverse switched access arrangements are non-local and are subject to switched access rates, not local reciprocal compensation rates.

II. AT&T'S INTERPREATION OF THE INTERCONNECTION AGREEMENT VIOLATES THE FUNDAMENTAL PRINCIPLE OF CONTRACT CONSTRUCTION THAT ALL TERMS OF A CONTRACT ARE TO BE GIVEN MEANING.

"'Under the rules governing the construction of contracts all provisions contained therein are presumed to be inserted with a purpose, and are to be given some meaning. A contract, unless its terms necessarily require it, will not be so construed as to render useless and meaningless a particular provision in the contract.'" *Harper v. Phoenix Ins. Co. of Hartford*, 126 S.E.2d 916, 918 (Ga. App. 1962) (citation omitted). "[T]hat construction will be favored which gives meaning and effect to all the terms of the contract over that which nullifies and renders meaningless a part of the language therein contained." *Sugarman v. Shaginaw*, 260 S.E.2d 731, 733 (Ga. App. 1979) (citations omitted); *see also Gray v. Cousins*, 245 S.E.2d 58, 60 (Ga. App. 1978) (holding that construction that renders contract language meaningless is not to be adopted).

AT&T's interpretation of the Interconnection Agreement as requiring the parties to treat *all* intraLATA calls, including those carried over switched access arrangements, as "local traffic"

violates this fundamental principle of contract construction, because it renders the entire "except" clause within the local traffic definition meaningless. Mr. King, the only witness whose testimony AT&T filed in support of its direct case, testified that the express exclusion from the definition of local traffic for calls carried over switched access arrangements applies to exclude only *inter*LATA calls from the definition of local traffic. Tr. Vol. 1 at 78. InterLATA calls, as Mr. King acknowledged, are *never* treated as local, however. Tr. Vol. 1 at 78. Thus, under AT&T's interpretation, the exclusion language is useless and meaningless because it is not needed to exclude interLATA calls from the definition of local traffic. Consequently, the Commission should reject AT&T's interpretation of the Interconnection Agreement.

III. AT&T'S CLAIM THAT THE EXCEPTION FOR CALLS CARRIED OVER SWITCHED ACCESS ARRANGEMENTS EXCLUDES ONLY *INTER*LATA CALLS FROM THE DEFINITION OF LOCAL TRAFFIC IS INCONSISTENT WITH THE TESTIMONY OF AT&T'S CONTRACT NEGOTIATOR THAT THE EXCLUSION APPLIES TO *ALL* ACCESS CALLS.

In addition to the fact that AT&T's interpretation of the Interconnection Agreement violates a primary rule of contract construction, Mr. King's claim that the contract language stating that calls carried over switched access arrangements are exempted from the definition of local traffic excludes only *inter*LATA calls is inconsistent with the testimony of AT&T's contract negotiator, Mr. Peacock. Mr. Peacock testified that the purpose of the "except" clause in section 5.3.1.1 was to exclude "access services" from the definition of "local traffic." Tr. Vol. 2 at 4-5; Peacock Depo. at 37-38. He explained that by "access services," he meant "any Feature Group A, B, C, and *any* other *access services* that would be *defined by* the FCC or the *State Commission*." Tr. Vol. 2 at 5 (emphasis added); *see also* Peacock Depo. at 68. Mr. Peacock further testified that switched access services, as well as the rates for those services, are set forth in tariffs filed with both the FCC and with state commissions. Peacock Depo. at 59-60. The

FCC has jurisdiction over interstate access services, and this Commission establishes rates pursuant to tariffs it approves for intrastate and intraLATA access services. Thus, according to Mr. Peacock, when he negotiated the Interconnection Agreement on behalf of AT&T, he understood that the language in section 5.3.1.1 to exempt intraLATA switched access calls from the definition of local traffic. Mr. King's claim that the contract language excludes only interLATA calls from the definition of local traffic is, even according to the testimony of AT&T's lead contract negotiator, bogus.

AT&T's counsel's suggestion that Mr. Peacock's specific description of calls excluded from the contract's definition of local traffic as including *any* access service defined by the FCC or by the state commission, tr. Vol. 2 at 21, refers only to interstate access traffic, is without merit. In addition to contradicting the plain words of the Agreement "as established by the State Commission or FCC," it is inconsistent with Mr. Peacock's sworn testimony. He testified repeatedly that access services defined by the state commission, as well as those defined by the FCC, were the subjects of the exclusion. State Commissions do not have jurisdiction over, nor do they define, interstate access services. State Commissions, through the tariffs they approve, establish only intrastate access services and rates. Counsel's claim also is inconsistent with Mr. King's testimony. Although Mr. King's interpretation of the exclusion is that it applies to exclude only interLATA calls, that category includes intrastate calls.

If AT&T's hearing strategy was to say something to support any theory it might choose to endorse later, then it succeeded. If its goal was to present credible, consistent evidence to this Commission in support of its Complaint, then it failed miserably. The Commission should not allow counsel to explain away a fatal admission with a claim that simply is not credible.

IV. IF THE COMMISSION DETERMINES THAT THE DEFINITION OF LOCAL TRAFFIC IN THE INTERCONNECTION AGREEMENT IS AMBIGUOUS, THE EXTRINSIC EVIDENCE DEMONSTRATES CONCLUSIVELY THAT THE PARTIES INTENDED AT THE TIME OF CONTRACTING TO EXCLUDE INTRALATA CALLS CARRIED OVER SWITCHED ACCESS ARRANGEMENTS FROM THE DEFINITION OF "LOCAL TRAFFIC."

A. The Commission cannot determine that the Agreement is ambiguous simply because AT&T conjured up an argument as to why the exclusion does not actually mean what it says.

"A contract is ambiguous when it is *reasonably* susceptible to more than one interpretation." *Stewart v. KHD Deutz of America*, 698 F.2d 698, 702 (11th Cir. 1993) (citing Georgia case law) (emphasis added). Extrinsic evidence is not admissible to establish ambiguity; "any ambiguities must be created by the language of the contract itself." *Id.* (citations omitted). Accordingly, AT&T's assertion that the exclusion from the definition of local traffic of calls originated or terminated over switched access arrangements means something different than what the Agreement says is not sufficient for the Commission to conclude that the Agreement is ambiguous. In order to find that the Interconnection Agreement is ambiguous, the Commission must first conclude that AT&T's interpretation of the agreement -- which requires that the Commission determine that a term specifically defined in one section of the contract means the same thing as a different, commonly understood term used in a separate provision -- is *reasonable*. BellSouth explained in section I. above why construing the Interconnection Agreement in that manner is not reasonable and that the Agreement unambiguously excludes from the definition of local traffic "calls that are originated or terminated through switched access arrangements." If the Commission determines, nevertheless, that the exclusion is *reasonably* susceptible to the interpretation AT&T advocates, the Commission must look to the

extrinsic evidence to explain the ambiguity. *Id.*[5] The extrinsic evidence demonstrates conclusively that the parties intended at the time of contracting to exclude intraLATA calls carried over switched access arrangements from their definition of "local traffic."

B. BellSouth told AT&T and AT&T understood before AT&T agreed to the language that intraLATA calls carried over switched access arrangements were excluded from the definition of "local traffic."

Ms. Shiroishi testified that BellSouth drafted the LATA wide local traffic definition with its exception for calls carried over switched access arrangements specifically to exclude from the definition of local traffic calls carried over switched access arrangements purchased out of a party's switched access tariff. Tr. Vol. 2 at 37. AT&T's contract negotiator, Mr. Peacock, and Mr. King, the person at AT&T with responsibility for inter-carrier compensation, acknowledged that they knew at the time BellSouth proposed the above language that a "switched access arrangement" is a facility "purchased out of the switched access tariff." Tr. Vol. 1 at 84, 213-14. Moreover, after BellSouth sent the proposed contract language to AT&T, the parties specifically discussed that the language meant that intraLATA calls carried over switched access arrangements would not be treated as local traffic. Tr. Vol. 2 at 36-38. Mr. Peacock does not dispute this important fact. He testified that Ms. Shiroishi told him that the "except" clause in section 5.3.1.1 was intended to exclude from the definition of local traffic calls placed using any "access services" purchased out of state or federal tariffs. Tr. Vol. 2 at 4-5; Peacock Depo. at 36-38, 59-60, 68. The intraLATA calls that are the subject of this case are terminated over switched

[5] AT&T alleged in its motion to strike BellSouth's extrinsic evidence that the parol evidence rule bars testimony regarding the parties' discussion about the contract term at issue because the Interconnection Agreement contains a merger clause. As the Commission recognized when it denied AT&T's motion, AT&T is wrong. The parol evidence rule "prohibits the consideration of evidence of a prior or contemporaneous oral agreement to *alter, vary or change* the *unambiguous* terms of a written contract." *First Data POS v. Willis*, 546 S.E.2d 781, 795 (Ga. 2001). *See also* Tr. Vol. 1 at 14 (Commissioner Ervin stating his "understanding that extrinsic evidence is admissible even in cases involving contracts with merger or integration clauses such as the present ones in the event that the language of the contract in question, examined solely on the basis of the relevant contractual language and without reference to any extrinsic evidence, is ambiguous.")

111

access arrangements that AT&T purchases out of BellSouth's North Carolina Switched Access Service Tariff. Tr. Vol. 1 at 82-83. They are, therefore, within the class of calls that Mr. Peacock acknowledged Ms. Shiroishi told him would be excluded from the definition of local traffic.

"The intention of the parties may differ among themselves. In such case, the meaning placed on the contract by one party and known to be thus understood by the other party at the time shall be held as the true meaning." Ga. Code Ann. § 13-2-4. Thus, even if AT&T's claim that it would not have purposefully intended to exclude calls carried over switched access arrangements from the definition of local traffic is believable, which, for the reasons set forth below it is not, that the language excludes intraLATA calls carried over switched access arrangements is still the true meaning of the contract, because BellSouth told AT&T the meaning BellSouth placed on the contract and AT&T did not object.

C. AT&T's explanation for the "switched access arrangements" exception is implausible, and the testimony of its witnesses is inconsistent and not credible.

AT&T's Mr. King did not participate in any of the Interconnection Agreement negotiations with BellSouth, nor did he discuss the exclusion language for "switched access arrangements" with BellSouth before the parties executed the Interconnection Agreement. Tr. Vol. 1 at 76. He nevertheless testified in his rebuttal testimony about BellSouth's alleged intent regarding the language. Mr. King claimed that that Mr. Peacock told him that BellSouth wanted the exclusion language in order to protect BellSouth in the event that a State Commission or the

FCC determined that (1) ISP traffic[6] was interstate in nature, and/or (2) the FCC determined VOIP transmissions constituted interLATA traffic. Tr. Vol. 1 at 55, 85.

Mr. King's explanation of BellSouth's supposed intent is implausible. He admitted that he knew that BellSouth's position was and always has been that VOIP calls should be treated as interLATA. Tr. Vol. 1 at 86. He also acknowledged on cross-examination that the FCC issued its ISP Order on Remand reaffirming its prior conclusion that ISP traffic is predominately interstate access traffic in April 2001, before BellSouth even proposed the language at issue, and three months before the parties executed the Interconnection Agreement. Tr. Vol. 1 at 91-93. Mr. King did not and could not explain why BellSouth would need protection from an FCC ruling on VOIP calls that was consistent with BellSouth's long-held position that such calls should be treated as interLATA, or from a ruling on ISP traffic given that the FCC had finally decided that issue before BellSouth even proposed the definition of local traffic with its exclusion for calls carried over switched access arrangements. Tr. Vol. 1 at 86-93. Mr. King also acknowledged, albeit reluctantly and after cross-examination by counsel for BellSouth and questioning from Commissioner Ervin, that Mr. Peacock never gave him a reason why BellSouth would need protection from such rulings when he supposedly told Mr. King about BellSouth's purported intent. Tr. Vol. 1 at 88-90.

Mr. King's explanation of BellSouth's supposed intent is even more implausible given that the parties specifically addressed in the Interconnection Agreement how they would handle both ISP traffic and VOIP transmissions. The parties "agree[d] to implement the FCC's Order on Remand and Report and Order in CC Docket No. 96-98 and 99-68 released April 27, 2001

[6] ISP traffic comprises calls to an information service provider or Internet service provider ("ISP") that are dialed by using a local dialing pattern (7 or 10 digits) by a calling party in one LATA to an ISP server or modem in the same LATA.

("ISP Order on Remand")" and "to amend [their] agreement . . . to incorporate language reflecting the FCC's ISP Order on Remand." In the second amendment to the Interconnection Agreement, the parties, in accordance with the ISP Order on Remand, agreed that "ISP-bound Traffic is not Local Traffic . . . subject to reciprocal compensation, but instead is information access traffic subject to the FCC's jurisdiction," and set forth a mechanism to compensate each other for such traffic that is dependent of the ratio of terminating to originating such traffic. Complaint, Ex. 3. With respect to VOIP traffic, the parties expressly acknowledged that they were unable to agree on how to treat VOIP transmissions that cross local calling area boundaries and that they would agree to abide by any FCC decisions regarding the nature of such traffic and the compensation payable. Complaint, Ex. 2.

In addition, at his deposition, Mr. Peacock, who Mr. King says gave him the implausible explanation for the purpose of the exclusion from the local traffic definition for calls transmitted over switched access arrangements, contradicted Mr. King. Mr. Peacock testified unequivocally that the local traffic definition and its express exclusion were *not* tied to the issues of how the parties would compensate each other for transporting and terminating ISP traffic and VOIP transmissions:

> Q. Now, is it your testimony that that sentence we talked about [the one setting forth the local traffic definition and exclusion for calls transmitted over switched access arrangements] was part of the parties' resolution of the ISP traffic issue?
>
> A. No, not the resolution of the ISP issue. But the language was negotiated at about the same time that we were finalizing the language that we would use as a place holder language for ISP, to implement the ISP order.
>
> ***
>
> Q. Is it your testimony that the sentence we're looking at in 5 – I think I've been saying 5.1.1.1. I mean to be saying 5.3.1.1. . . . Is it your testimony

that that sentence was put in as part of the parties' resolution of the voice over internet issue?

A. The language was – let me go back and say no. . . .

Peacock Depo. at 26-28.

The fact that the local traffic definition was not tied to the parties' agreement on how to handle either ISP traffic or VOIP transmissions is confirmed by the May 22, 2001, redlined version of the Interconnection Agreement in which BellSouth first proposed a LATAwide definition of local traffic with an exception for intraLATA calls carried over switched access arrangements for North Carolina. Tr. Vol. 1 at 135-36; BellSouth Cross Ex. 2. There is no mention in that document that the parties would agree to treat ISP traffic in accordance with the FCC's ISP Order on Remand, and there is no reference to VOIP calls. Tr. Vol. 1 at 137-38. There is likewise nothing in the parties' July 11, 2001, redlined version of the contract that says the parties would handle ISP traffic in accordance with the FCC's ISP Order on Remand. Tr. Vol. 1 at 141-42; BellSouth Cross Ex. 4.

Notwithstanding the documentary evidence that is consistent with Mr. Peacock's sworn deposition testimony, Mr. Peacock changed his story completely at the hearing, which occurred only two days after his deposition:

Q. Was the contract language at issue in this case, specifically, that the parties agreed to treat all LATAwide traffic as local except for those calls that originated or terminated through switched access arrangements as established by the State Commission or FCC, part of the parties' resolution of the ISP traffic issue?

A. Yes, that was one of the parts of the resolution.

Q. The language that sets forth the definition of local traffic and contains the exception for switched access arrangements, that was not put in the contract as part of the parties' resolution of the voice over internet protocol calls issue, was it?

A. Yes, the exclusion was placed there such that, again, there were -- there were specifically two issues that our understanding was that BellSouth had offered this language; and that dealt with ISP, whether or not dial-up ISP traffic would be considered interstate versus local and voice over IP, whether that would be compensated at – via reciprocal compensation rates and other access services that were not specifically addressed in the negotiations.

Tr. Vol. 1 at 216, 218-19.

The fact that Mr. Peacock had a hard time keeping his story straight is not surprising, given his admission that AT&T's counsel drafted both his prefiled testimony and the testimony of Mr. King. Tr. Vol. 1 at 195; Peacock Depo. at 4-5. The conflicting testimony quoted above is not the only case where Mr. Peacock's testimony at the hearing contradicted his deposition testimony. Mr. Peacock also changed his testimony regarding the import of the parties' interconnection agreement in Mississippi to their negotiation of the North Carolina agreement. Mr. Peacock testified at his deposition that:

> Mississippi was a negotiated arrangement that was kind of a stand alone arrangement done prior to, because we didn't want to arbitrate in Mississippi. So, we have one set of language in Mississippi, then we have other sets of language similar in the other states – identical in the other states.

At the hearing, however, Mr. Peacock disagreed with the deposition testimony he gave just two days before the hearing:

Q. And AT&T and BellSouth negotiated one agreement for Mississippi because they determined they didn't want to arbitrate there. . . . And essentially negotiated the other eight states collectively. So you have a Mississippi agreement and then you've got a separate set of language that governs the other eight states, correct?

A. No. . . .

Tr. Vol. 1 at 197-98.

Mr. Peacock's deposition testimony undermining Mr. King's testimony regarding whether the local traffic definition was tied to the parties' resolution of the ISP traffic and VOIP issues is not the only situation where AT&T's witnesses contradicted each other. As noted in section III. above, Mr. King and Mr. Peacock gave conflicting testimony on what traffic they say is excluded from the definition of local traffic by virtue of the "except" clause in the definition. Moreover, AT&T's witnesses did not even agree on whether the definition of local traffic was a significant issue for AT&T. Mr. Peacock told the Commission that the definition of local traffic was an important issue to AT&T and that AT&T had been attempting to get a definition of local traffic that included all calls within a LATA since the 1996 Act was passed. Tr. Vol. 1 at 201. He claimed that if BellSouth did not agree to the definition AT&T wanted, then AT&T would have arbitrated the issue with BellSouth. Tr. Vol. I at 167. Mr. Peacock conceded, however, that AT&T agreed in its 1997 Interconnection Agreement with BellSouth to a definition of local traffic that did *not* include all traffic in a LATA, and that AT&T did *not* seek to arbitrate that issue with BellSouth then, or in 2000, when BellSouth originally proposed keeping the same definition in the new agreement as in the first one. Tr. Vol. 1 at 201-02, 204-06.

Moreover, AT&T's Ms. Stevens testified that, contrary to Mr. Peacock's testimony, the definition of local traffic was *never* a key issue in the parties' negotiations. Tr. Vol. 1 at 134. Indeed, Ms. Stevens testified that "[d]uring the negotiations of the North Carolina agreement local traffic was never discussed. It was not an issue that the parties were negotiating." Tr. Vol. 1 at 133-34. Ms. Stevens did not even have *any* recollection of BellSouth proposing new language addressing this issue in May 2001, that the parties agreed to with slight modification, even though one of her primary responsibilities was to keep up with the redlined contracts the parties exchanged throughout their negotiations. Tr. Vol. 1 at 130, 134-35.

During her opening statement, counsel for AT&T stated that in deciding this case the Commission should "think about the credibility of the witnesses" and "whether the events, as they have been described in the testimony, make common sense." Tr. Vol. 1 at 19. Credibility of the witnesses is, of course, of paramount importance in every case. As demonstrated above, AT&T's witnesses, on multiple occasions, contradicted themselves and each other, and their theory that the contract exclusion in a section dealing with intraLATA traffic was meant to exclude only interLATA traffic does not "make common sense." Consequently, the Commission should not rely on the testimony that AT&T's counsel wrote for them.

D. AT&T's claim that the documentary evidence favors AT&T is false – AT&T did not produce a single document that supports its story.

AT&T claims that "the weight of the documentary evidence" favors AT&T. Tr. Vol. 1 at 23 (Opening Statement by AT&T's counsel). That is not true. The fact is that AT&T has not come forward with a single "document" to support its story.

It is true that AT&T saved its notes from the negotiation sessions with BellSouth and introduced those notes into the record in this case. It is also true that BellSouth, consistent with its standard practice, discarded its notes after the parties executed the Interconnection Agreement. Tr. Vol. 2 at 68. The relevant inquiry for the Commission is the *quality* of the evidence, not the quantity of paper produced irrespective of its relevance. Mr. Peacock told Ms. Stevens that AT&T needed her testimony in this case because Ms. Stevens was AT&T's "official note taker" during the negotiation of the Interconnection Agreement. Tr. Vol. 1 at 131. Ms. Stevens admitted, however, that she did not take *any* notes of the parties' discussions in June and July 2001 regarding the definition of local traffic, because she did not consider it a "key issue." Tr. Vol. 1 at 131, 133-34. AT&T has not come forward with a single note or other piece of documentary evidence that either confirms its story or contradicts Ms. Shiroishi's testimony that

she specifically told AT&T that the language at issue excluded from the definition of local traffic calls that originated or terminated through switched access arrangements. The *only* evidence that AT&T introduced that refutes that testimony is the testimony that AT&T's lawyers drafted for AT&T's witnesses. As set forth above, the testimony of AT&T's witnesses is so rife with contradictions and inconsistencies that it cannot and should not be relied upon by the Commission.

The Commission should not place any value in the pronouncement by AT&T's counsel in her opening statement to the Commissioners that "You're not going to see documents from BellSouth that come back to AT&T saying, here's what we believe the definition of local traffic is." The truth, which AT&T's counsel left unsaid, is that AT&T did not offer a single document (and none exists) telling BellSouth -- before the parties executed the Interconnection Agreement -- what AT&T now says it believed the definition of local traffic to mean. If AT&T had any document to support its interpretation, the Commission can rest assured that it would have been AT&T Exhibit No. 1.

E. AT&T agreed to include other language in the Interconnection Agreement that wholly undermines its contention that it believed that intraLATA calls carried over switched access arrangements would be treated as "local traffic."

AT&T agreed to include the following language in the Interconnection Agreement after BellSouth proposed the definition of local traffic with its exclusion for calls carried over switched access arrangements: "For terminating its intraLATA toll traffic on the other party's network, the originating party will pay the terminating party's intrastate or interstate terminating switched access rates as set forth in the effective intrastate or interstate access services tariff, whichever is appropriate." Tr. Vol. 1 at 138-40; BellSouth Cross Ex. 3. That provision effectively says the same thing as the "except" clause in the parties' definition of local traffic –

that switched access rates will apply to certain intraLATA traffic. AT&T never objected to that provision, however. Tr. Vol. 2 at 7-8. On the day before the parties executed the Interconnection Agreement, and *after* the parties agreed to the local traffic definition and exclusion set forth in section 5.3.1.1 of Attachment 3, Ms. Shiroishi realized that the provision quoted above was no longer necessary and, accordingly, she proposed deleting that language. Tr. Vol. III at 33-35.[7] AT&T agreed. Tr. Vol. 2 at 8. Had BellSouth not proposed deleting the language at the eleventh hour because *it* believed that it was redundant with the exception in the local traffic definition, AT&T would have no room to argue that the exception does not mean that switched access rather than reciprocal compensation rates apply to intraLATA calls carried over switched access arrangements. The fact that AT&T, which was represented by counsel during the negotiations, Tr. Vol. 1 at 157-58, never objected to a contract term that wholly undermines its interpretation of another term is strong evidence that AT&T intended at the time of contracting to pay switched access rates for intraLATA calls terminated over switched access arrangements purchased out of BellSouth's Switched Access Tariff, and that the Commission should reject AT&T's twisted, after-the-fact interpretation of the contract.

F. AT&T's reliance on the parties' Mississippi Interconnection Agreement is misplaced.

AT&T seemingly relies upon the parties' Mississippi Interconnection Agreement to convince the Commission that the North Carolina Agreement does not exclude any intraLATA calls from definition of local traffic in the North Carolina Agreement. In the Mississippi

[7] Mr. Peacock testified that AT&T agreed to delete the provision, specifically stating that it would pay switched access rates for certain intraLATA traffic on the same day that it agreed to the local traffic definition with the exclusion for switched access arrangements. Once again, the documentary evidence proves that Mr. Peacock's sworn testimony is not accurate. Ms. Shiroishi proposed deleting the language in an e-mail to Mr. Peacock and others dated July 18, 2001. It reads: "Attached is a redline as a result of last night's call. I realized that we don't need the intraLATA stuff, so I've redlined that. Everything else that you accepted is shown as accepted." The local traffic definition and its exclusion are "shown as accepted," and AT&T never communicated otherwise.

contract, the parties defined local traffic simply as "any telephone call that originates and terminates in the same LATA." In her closing argument, AT&T's attorney said that after the parties subsequently negotiated the local traffic definition in the North Carolina Interconnection Agreement and began operating under it, they were surprised that BellSouth believed the definition of local traffic in the North Carolina agreement was different than the definition in the Mississippi agreement. Tr. Vol. 3 at 74-75. How AT&T could find that surprising is incredible. The North Carolina agreement contains an express exclusion for intraLATA calls carried over switched access arrangements, and the Mississippi agreement does not exclude any traffic from its LATAwide definition of local traffic. If Bellsouth intended to have a LATAwide definition of local traffic in North Carolina like the parties have in Mississippi, it would have proposed the same contract language. Instead, it proposed different language that included an express exception for calls carried over switched access arrangements, and AT&T agreed to that exclusion. For AT&T to believe that the two clauses mean the same thing is unreasonable, to say the least.

G. No other CLP with the same definition of "local traffic" in its interconnection agreement with BellSouth has taken the position that intraLATA calls carried over switched access arrangements are local calls subject to reciprocal compensation rates.

Several CLPs other than AT&T have interconnection agreements with BellSouth that contain the same definition of local traffic as is at issue in this case. Tr. Vol. 2 at 38. Notably, no other CLP has taken the position that the exclusion means that they may pay reciprocal compensation rather than switched access rates for terminating intraLATA calls to BellSouth over switched access arrangements. If other CLPs believed AT&T's "interpretation" was a tenable one, they would have, at a minimum, intervened in this proceeding and supported a

contract interpretation in which they also would benefit. AT&T's lone voice on this issue further demonstrates the unreasonableness of its position.

Additionally, AT&T has the identical local traffic definition in its interconnection agreements with BellSouth in all eight of the states other than Mississippi where BellSouth operates as an incumbent local exchange carrier, but it has brought this complaint in only one other state than North Carolina, and that case will not be heard until mid-May. AT&T is blatantly forum shopping in the belief that it has a better chance of convincing this Commission of the merits of the theory it concocted to minimize its inter-carrier compensation liabilities than it does with at least six other states. The law and the facts do not support AT&T's creative arguments, however. Consequently, this Commission should not reward AT&T's forum shopping.

CONCLUSION

In her closing argument, AT&T's counsel claimed that Mr. Peacock's story "fits together very nicely." Notwithstanding the substantial effort counsel expended in crafting the testimony filed by Mr. Peacock and AT&T's other witnesses, and will no doubt spend in attempting to convince the Commission to lend credence to that testimony, the fact is that Mr. Peacock's story does not "fit together nicely" with his own prior sworn testimony in this case, nor with the testimony of AT&T's other witnesses. Mr. Peacock changed his story on certain issues, and with respect to other critical points, his testimony contradicted the testimony of Mr. King and Ms. Stevens. The applicable law, when applied to the facts of this case, mandates that the Commission order that:

1. The Interconnection Agreement unambiguously excludes intraLATA calls originated or terminated through switched access arrangements from the definition of local traffic; or

2. In the alternative, that the Interconnection Agreement is ambiguous, but the extrinsic evidence demonstrates conclusively that at the time of contracting the parties intended to exclude intraLATA calls originated or terminated over switched access arrangements from the definition of local traffic.

Respectfully submitted this 4th day of April, 2003.

Edward L. Rankin, III

EDWARD L. RANKIN, III
1521 BellSouth Plaza
P. O. Box 30188
Charlotte, NC 28230
(704) 417-8833

ANDREW D. SHORE
Suite 4300, BellSouth Center
675 West Peachtree Street, N.E.
Atlanta, GA 30375
(404) 335-0765

CERTIFICATE OF SERVICE

I hereby certify that a true and correct copy of the foregoing was served on all parties of record by placing a copy of same in the U.S. mail, first class postage prepaid, this 4th day of April, 2003.

Dorothy Blache

477669

WOMBLE
CARLYLE
SANDRIDGE
& RICE
A PROFESSIONAL LIMITED
LIABILITY COMPANY

One Atlantic Center
1201 West Peachtree Street
Suite 3500
Atlanta, GA 30309
Telephone: (404) 872-7000
Fax: (404) 888-7490
Web site: www wcsr com

Loretta A. Cecil
Direct Dial: (404) 888-7437
Direct Fax: (404) 870-4826
E-mail: lcecil@wcsr.com

April 24, 2003

RECEIVED
APR 28 2003
PUBLIC SERVICE COMMISSION
THE GENERAL COUNSEL

VIA FEDERAL EXPRESS

Mr. Robin Cauthen, Esq.
North Carolina Public Staff
4326 Mail Service Center
Raleigh, North Carolina 27699-4326

Re: *In the Matter of AT&T Communications of the Southern States, LLC Teleport Communications Group, Inc. and TCG of the Carolinas, Inc. vs. BellSouth Telecommunications, Inc. Docket No. P-55; Sub 1376*

Dear Robin:

Regarding the above referenced proceeding ("Proceeding"), please find enclosed the interconnection agreement recently executed between BellSouth Telecommunications, Inc. ("BellSouth") and Auglink Communications, Inc. ("Auglink") which BellSouth filed with the Florida Public Service Commission on March 14, 2003. In this agreement, Auglink adopted in its entirety the interconnection agreement currently in effect between BellSouth and AT&T of the Southern States, LLC ("AT&T") for Florida ("Florida Interconnection Agreement"), except for the modifications discussed below and a few others which are not at issue in this Proceeding.

BellSouth's modifications are relevant because the Florida Interconnection Agreement is identical to the interconnection agreement currently in effect between BellSouth and AT&T for North Carolina ("North Carolina Interconnection Agreement") as to those provisions which are at issue in this Proceeding. Thus, changes made by BellSouth in the Florida

Interconnection Agreement directly relate to interpretation of the North Carolina Interconnection Agreement.[1]

We are sending this agreement because it contradicts BellSouth's interpretation of what constitutes "Local Traffic" and "Switched Access Traffic" in North Carolina. In this respect, notwithstanding the fact that in Section 5.3.1.1 of the North Carolina Interconnection Agreement the Parties expressly agreed to adopt a "LATAwide local concept" for determining what constitutes "Local Traffic," BellSouth alleges that the Parties also agreed that ***traditional intraLATA traffic*** transported and terminated over "switched access arrangements as established by the State Commission or FCC" (meaning, according to BellSouth, traffic which is transported and terminated over "switched access trunks" established pursuant to BellSouth's traditional "switched access tariffs") would not be compensated as "Local Traffic." The Parties have referred to this "switched access arrangements as established by the State Commission or FCC" language as the "exclusion" language relative to what constitutes "Local Traffic." Thus, the dispute in this Proceeding involves intrepretating the exclusion language in the context of the relevant contractual provisions and all other evidence before the Commission.

To this end, if the terms of the North Carolina Interconnection Agreement supported BellSouth's interpretation of the relevant contractual provisions, there would be no reason for BellSouth to modify the Florida Interconnection Agreement with Auglink (and possibly with many other competing local providers).[2] Specifically, the changes proposed by BellSouth and agreed to by Auglink support AT&T's position that in North Carolina, BellSouth agreed that all intraLATA traffic would be compensated at reciprocal compensation rates (and not switched access rates), except where a "State Commission or the FCC" decided that certain ***nontraditional traffic*** was not "Local Traffic." Examples of such nontraditional traffic discussed by the Parties included dial up calls to internet service providers ("ISP's) and voice over internet protocol ("VOIP") calls.

---

[1] We have attempted to determine whether BellSouth has filed a similar modified "adopted" interconnection agreement with another competing local provider ("CLP") with the North Carolina Utilities Commission ("NCUC"). However, the NCUC's website does not allow us to determine which interconnection agreements are "adopted" and which are "full blown" negotiated agreements; also many of the agreements are too lengthy for posting on the NCUC's website. We would be happy to do additional research regarding the same if you can provide us with guidance on how to refine our research efforts.

[2] Moreover, as discussed below, the changes made in the Auglink agreement reflect language which BellSouth proposed to AT&T for the North Carolina Interconnection Agreement. Thus, it is logical to conclude that BellSouth proposed the changes made in the Auglink agreement, not Auglink.

Specifically, from the pre-filed testimony, depositions, hearing transcript, and briefs, you will recall that BellSouth first proposed that "switched access arrangements" would be established by the "ruling regulatory body." Moreover, BellSouth's witness testified that the language "switched access arrangements as established by the ruling regulatory body" was meant to exclude from the definition of "Local Traffic" that traffic which was exchanged over the Parties' switched access trunks as described in their switched access tariffs. However, AT&T's witnesses testified that BellSouth did not make such statements during the negotiations. Rather, AT&T's witnesses testified that BellSouth explained that the exclusion was to protect BellSouth in the event a "State Commission or the FCC" subsequently determined that nontraditional traffic (such as dial up calls to ISP's or VOIP calls) was not "Local Traffic." Accordingly, AT&T proposed that "ruling regulatory body" be changed to "State Commission or FCC," and BellSouth agreed to this change.

We provide this information as background because in the Auglink agreement BellSouth also used the language "ruling regulatory body," but not in order to exclude from the definition of "Local Traffic" traffic which was exchanged over switched access trunks as described in switched access tariffs (as BellSouth alleges "ruling regulatory body" was first proposed in North Carolina). ***Instead, in the Auglink agreement BellSouth uses "ruling regulatory body" in the exact same context in which AT&T's witnesses testified that BellSouth had used the language in negotiations with AT&T in North Carolina—to govern determinations regarding whether certain nontraditional traffic constituted "Local Traffic."*** In particular, BellSouth changed 5.3.1.1 of the Florida Interconnection Agreement to read as follows:

> 5.3.1.1 For reciprocal compensation between the Parties pursuant to this Agreement, Local Traffic is defined as any circuit switched call that is originated by an end user of one Party and terminated to an end user of the other Party within a given LATA on that other Party's network, except for those calls that are originated or terminated ***through switched access arrangements (i.e., traffic that is exchanged over switched access trunk groups.) Additionally, Local Traffic includes any cross boundary, voice-to-voice intrastate, interLATA or interstate, interLATA calls established as a local call by the ruling regulatory body.*** ISP-bound Traffic is defined as calls to an information service provider or internet service provider ("ISP") that are dialed by using a local dialing

> pattern (7 or 10 digits) by a calling party in one LATA to an ISP server or modem in the same LATA. ISP-bound Traffic is not Local Traffic subject to reciprocal compensation, but instead is information access traffic subject to the FCC's jurisdiction. [Emphasis Added]

Importantly, BellSouth's use of "ruling regulatory body" in the Auglink agreement (again, in the exact same context as AT&T's witnesses indicate that such language was proposed by BellSouth in the North Carolina negotiations) is further evidence that AT&T's witnesses have provided credible testimony regarding what was said between the Parties regarding the meaning of the exclusion language in dispute. Along these same lines, it also is significant that BellSouth changed the language in the Auglink agreement regarding "switched access arrangements as established by the State Commission or FCC" to "switched access arrangements (i.e. traffic that is exchanged over switched access trunk groups)." This provides even further support regarding the credibility of AT&T's witnesses as to what the Parties discussed relative to the meaning of "switched access arrangements." Moreover, if the "switched access arrangements" language in the North Carolina Interconnection Agreement means what BellSouth says it means, there would have been no reason for BellSouth to have changed this language in the Auglink agreement.

Furthermore, BellSouth's use of the language in the Auglink agreement that ". . . Local Traffic includes any cross boundary, voice-to-voice intrastate, interLATA or interstate, interLATA calls established as a local call by the ruling regulatory body. . ." puts to rest any concerns regarding whether it is logical for any interLATA traffic ever to be classified as "Local Traffic" under the language found in Section 5.3.1.1 of the North Carolina Interconnection Agreement. Importantly, in the Auglink agreement BellSouth (consistent with its prior advocacy regarding both dial up calls to ISP's and VOIP calls as discussed further in AT&T's brief) specifically has acknowledged the possibility that interLATA calls can be considered "Local Traffic."

This acknowledgement also supports AT&T's testimony that "switched access arrangements as established by the State Commission or FCC" was limited to such determinations regarding only intrastate interLATA and interstate interLATA traffic. This is borne out by the Parties' discussions, as well as the fact that the "interrelated" definition of "Switched Access Traffic" found in Section 5.3.3 of the North Carolina Interconnection Agreement is defined to mean intrastate interLATA and interstate interLATA traffic. In this respect, intrastate intraLATA traffic is specifically excluded from the definition of "Switched Access Traffic" in North Carolina.

Additionally, please note that BellSouth also changed the definition of "Switched Access Traffic" in the Auglink agreement. The new definition is as follows:

> 5.3.1.0 Switched Access Traffic. Switched Access Traffic is described as telephone calls requiring local transmission or switching services for the purpose of the origination or termination of ***Telephone Toll Services.*** Switched Access Traffic includes, but is not limited to, the following types of traffic: Feature Group A, Feature Group B, Feature Group C, Feature Group D, toll free access (e.g. 8XX), 900 access and their successors. Additionally, any Public Switched Telephone Network interexchange telecommunications traffic, regardless of transport protocol method, where the originating and terminating points, end-to-end points, are in different LATAs, or are in the same LATA and the Parties' Switched Access Services are used for the origination or termination of the call, shall be considered Switched Access Traffic. ***Irrespective of transport protocol method used, a call which originates in one LATA and terminates in another LATA (i.e., the end-to-end points of the call) or in which the Parties' Switched Access Services are used for the origination or termination of the call, shall not be considered Local Traffic or ISP-bound Traffic.*** If the BellSouth end user chooses Auglink as their presubscribed interexchange carrier, or if the BellSouth end user uses Auglink as an interexchange carrier on a 101XXXX basis, BellSouth will charge Auglink the appropriate BellSouth tariff charges for originating switched access services. Neither Party shall represent Switched Access Traffic as Local Traffic or ISP-bound Traffic for the purposes of determining compensation for the call. [Emphasis Added]

Unlike the North Carolina Interconnection Agreement where "Switched Access Traffic" is defined to mean intrastate interLATA and interstate interLATA traffic (and thus excludes intrastate intraLATA traffic), in the Auglink agreement BellSouth defined such traffic as "Telephone Toll Services." Although "Telephone Toll Traffic" does not appear as a defined term in the Auglink agreement, you will recall from the "Switched Access Traffic" matrix included in AT&T's brief that BellSouth first defined "Switched Access Traffic"

in North Carolina as "Telephone Toll Services." When AT&T refused to accept this definition, BellSouth next attempted to get AT&T to agree to a definition which included "intrastate intraLATA, intrastate interLATA and interstate interLATA traffic." AT&T also refused to accept this definition. As a result, the next day when the Parties finally reached agreement regarding a definition of "Switched Access Traffic," it was limited to intrastate interLATA and interstate interLATA traffic.

Obviously, contrary to BellSouth's allegation in this Proceeding that it did not need to include intrastate intraLATA traffic in the definition of "Switched Access Traffic" (because BellSouth "already was "covered" relative to this traffic by virtue of the language regarding "switched access arrangements as established by the State Commission or FCC"), including intrastate intraLATA traffic in the definition of "Switched Access Traffic" was important in the Auglink agreement. This is the case even though the Auglink agreement includes a definition of "Local Traffic" which states that "switched access arrangements" means "traffic that is exchanged over switched access toll trunk groups."

Additionally, please note that the final sentence of the definition of "Switched Access Traffic," states "[n]either Party shall represent Switched Access Traffic as Local Traffic or ISP-bound Traffic for the purposes of determining compensation for the call." However, there is no corollary sentence regarding the Parties not representing "Local Traffic" to be "Switched Access Traffic." This is because (as AT&T established at the hearing) BellSouth's historical "local only" network means BellSouth never transports traffic over "switched access trunk groups." Thus, BellSouth never has to concerned about "misrepresenting" any "Switched Access Traffic" as "Local Traffic."

Finally, please note that the language "interrelating" Sections 5.3.1.1 and 5.3.3 in the North Carolina Interconnection Agreement is not found in the Auglink agreement. You will recall that BellSouth attempted to "explain" that this "interrelated" language was included in North Carolina only because Section 5.3.3 dealt primarily with whether VOIP calls constituted "Switched Access Traffic;" thus BellSouth argued that the VOIP provisions found in the definition of "Switched Access Traffic" needed to match the definition of "Local Traffic" in Section 5.3.1.1; thus BellSouth argued the need to "interrelate" Section 5.3.3 to Section 5.3.1.1—but only as to VOIP calls and not other traffic covered by Section 5.3.1.1.

However, the definition of "Switched Access Traffic" in the Auglink agreement also deals with VOIP calls, but there is no language in the Auglink

agreement which "interrelates" the definitions of "Switched Access Traffic" and "Local Traffic" in that agreement. This proves that BellSouth's "explanation" regarding the "interrelatedness" language of Section 5.3.3 makes no sense. Rather, the correct "explanation" is that the language in Section 5.3.3 which "interrelates" Section 5.3.3 to Section 5.3.1.1 means that "Local Traffic" as described in Section 5.3.1.1 includes all traditional intraLATA traffic, because such traffic is expressly excluded from the definition of "Switched Access Traffic" in Section 5.3.3. The only traffic which would not be considered "Local Traffic" (by virtue of the "switched access arrangements as established by the State Commission or FCC" exclusion language found in Section 5.3.1.1) would be nontraditional interLATA traffic such as calls to ISP's and VOIP calls.

We hope you find this information helpful as you complete your analysis of this interconnection dispute. Again, on behalf of AT&T, we appreciate your efforts to provide the Commission with a reasoned and comprehensive recommendation.

Sincerely yours,

WOMBLE CARLYLE SANDRIDGE & RICE
A Professional Limited Liability Company

Loretta A. Cecil/aaw

Loretta A. Cecil

Enc.

Copy to:
Ms. Antoinette Wike, Esq.

bcc: Roxanne Douglas, Esq., AT&T
David Eppsteiner, Esq., AT&T
Jeff King, AT&T
Bill Peacock, AT&T
John Policastro, AT&T
Roberta Stevens, AT&T

BELLSOUTH

BellSouth Telecommunications, Inc.
Suite 400
150 South Monroe Street
Tallahassee, FL 32301-1556

marshall.criser@bellsouth.com

Marshall M. Criser III
Vice President
Regulatory & External Affairs

850 224 7798
Fax 850 224 5073

March 14, 2003

030264 -TP

Mrs. Blanca S. Bayo
Director, Division of The Commission Clerk and Administrative Services
Florida Public Service Commission
2540 Shumard Oak Boulevard
Tallahassee, Florida 32399

Re: Notice of the Adoption of Interconnection, Unbundling, Resale, and Collocation agreement between BellSouth Telecommunications, Inc. ("BellSouth") and AT&T Communications of the Southern States, LLC d/b/a AT&T by Auglink Communications, Inc..

Dear Mrs. Bayó:

BellSouth Telecommunications, Inc. hereby provides notice to the Florida Public Service Commission of the adoption by Auglink Communications, Inc. of the Interconnection, Unbundling, Resale, and Collocation Agreement for the State of Florida entered into between BellSouth Telecommunications Inc. and AT&T Communications of the Southern States, LLC d/b/a AT&T, which was filed with this Commission on October 29, 2001 in Docket No. 000731-TP.

Auglink Communications, Inc. is adopting the agreement and all amendments (if applicable) as provided by Section 252(i) of the Telecommunications Act of 1996.

Enclosed is the original and two (2) copies of the contract between BellSouth Telecommunications, Inc. and Auglink Communications, Inc., for your records.

If you have any questions please do not hesitate to contact Kathleen Arant at (850) 222-9380.

Very truly yours,

Marshall M. Criser III
(KA)

Regulatory Vice President

DOCUMENT NUMBER-DATE
02521 MAR 14 8
FPSC-COMMISSION CLERK

133

BELLSOUTH® / CLEC Agreement

Customer Name: AugLink Communications, Inc.

Auglink	2
Adoption Papers	3
Att 8 - Rights of Way	12
Exhibit3	15
Att 1 - Resale Discounts and Rates	16
Att 2 - UNE Rates	17
Att 3 - Local Interconnection Rates	69
Att 7 - ODUF ADUF EODUF CMDS Rates	70

Note: This page is not part of the actual signed contract/amendment, but is present for record keeping purposes only.

By and Between

BellSouth Telecommunications, Inc.

And

AugLink Communications, Inc.

AGREEMENT

This Agreement, which shall become effective thirty (30) days following the date of the last signature of both Parties ("Effective Date"), is entered into by and between AugLink Communications, Inc., ("AugLink"), a Florida corporation on behalf of itself, and BellSouth Telecommunications, Inc., ("BellSouth"), a Georgia corporation, having an office at 675 W. Peachtree Street, Atlanta, Georgia, 30375, on behalf of itself and its successors and assigns.

WHEREAS, the Telecommunications Act of 1996 (the "Act") was signed into law on February 8, 1996; and

WHEREAS, section 252(i) of the Act requires BellSouth to make available any interconnection, service, or network element provided under an agreement approved by the appropriate state regulatory body to any other requesting telecommunications carrier upon the same terms and conditions as those provided in the agreement in its entirety; and

WHEREAS, AugLink has requested that BellSouth make available the interconnection agreement in its entirety executed between BellSouth and AT&T Communications of the Southern States, Inc. ("AT&T") dated October 26, 2001for the state of Florida.

NOW, THEREFORE, in consideration of the promises and mutual covenants of this Agreement, AugLink and BellSouth hereby agree as follows:

1. AugLink and BellSouth shall adopt in its entirety, except for those items identified in Paragraph 2-11 following, the AT&T Interconnection Agreement dated October 26, 2001 and any and all amendments to said agreement executed and approved by the appropriate state regulatory commission as of the date of the execution of this Agreement. The AT&T Interconnection Agreement and all amendments are attached hereto as Exhibit 1 and incorporated herein by this reference. The adoption of this agreement with amendment(s) consists of the following:

ITEM	NO. PAGES
Adoption Papers	9
Exhibit 1 - Title Page	1
Exhibit 1 - AT&T Agreement	469
Exhibit 1 - Amendment dated 04/18/02	56
Exhibit 1 - Amendment dated 09/06/02	5
Exhibit 1 - Amendment dated 10/15/02	70
Exhibit 1 – Amendment dated 11/26/02	3
Exhibit 2 - ATT 8 - Rights of Way	3
Exhibit 3 – Rates	54
TOTAL	670

2. The Parties agree to delete Section 3.23 of Attachment 1 and replace with a new Section 3.23 as follows:

3.23 Notwithstanding the foregoing, BellSouth may provide AugLink notice via Internet posting of price changes and changes to the terms and conditions of services available for resale per Commission Orders. BellSouth will also post changes to business processes and policies, notices of new service offerings, and changes to service offerings not requiring an amendment to this Agreement, notices required to be posted to BellSouth's website, and any other information of general applicability to CLECs.

3. The Parties hereby agree to delete Section 5.3.1.1 of Attachment 3, as amended on April 18, 2002, and replace with new Sections 5.3.1.1 and 5.3.1.1.1 as follows:

5.3.1.1 For reciprocal compensation between the Parties pursuant to this Attachment, Local Traffic is defined as any circuit switched call that is originated by an end user of one Party and terminated to an end user of the other Party within a given LATA on that other Party's network, except for those calls that are originated or terminated through switched access arrangements (i.e., traffic that is exchanged over switched access trunk groups). Additionally, Local Traffic includes any cross boundary, voice-to-voice intrastate, interLATA or interstate, interLATA calls established as a local call by the ruling regulatory body. ISP-bound Traffic is defined as calls to an information service provider or Internet service provider ("ISP") that are dialed by using a local dialing pattern (7 or 10 digits) by a calling party in one LATA to an ISP server or modem in the same LATA. ISP-bound Traffic is not Local Traffic subject to reciprocal compensation, but instead is information access traffic subject to the FCC's jurisdiction.

5.3.1.1.1 Notwithstanding the definitions of Local Traffic and ISP-bound traffic above, and pursuant to the FCC's Order on Remand and Report and Order in CC Docket 99-68 released April 27, 2001 ("ISP Order on Remand"), BellSouth and AugLink agree to the rebuttable presumption that all combined circuit switched Local and ISP-bound Traffic delivered to BellSouth or AugLink that exceeds a 3:1 ratio of terminating to originating traffic on a statewide basis shall be considered ISP-bound traffic for compensation purposes. BellSouth and AugLink further agree to the rebuttable presumption that all combined circuit switched Local and ISP-bound Traffic delivered to BellSouth or AugLink that does not exceed a 3:1 ratio of terminating to originating traffic on a statewide basis shall be considered Local Traffic for compensation purposes.

4. The Parties hereby agree to delete Sections 5.3.2, 5.3.3, 5.3.3.1, 5.3.3.2, 5.3.3.3, 5.3.4 and 5.3.5 of Attachment 3, as amended on April 18, 2002 and replaced with new Sections 5.3.2, 5.3.3, 5.3.3.1, 5.3.3.2, 5.3.3.3, 5.3.3.4, 5.3.4 as follows:

5.3.2 The Parties shall provide for the mutual and reciprocal recovery of the cost for the network facilities utilized in transporting and terminating Local Traffic on each other's network.

5.3.3 The Parties agree that charges for transport and termination of Local Traffic on their respective networks are as set-forth in Exhibit A to this Attachment.

5.3.4 Neither Party shall pay compensation to the other Party for per minute of use rate elements associated with Call Transport and Termination of ISP-bound Traffic.

5.3.5 The appropriate elemental rates set-forth in Exhibit A of this Attachment shall apply for Transit Traffic as described in Section 5.3.20 below.

5. The Parties hereby agree to delete Sections 5.3.10 and 5.3.11, as amended on April 18, 2002, of Attachment 3 and replaces with new Sections 5.3.10 and 5.3.11 as follows:

5.3.10 Switched Access Traffic. Switched Access Traffic is described as telephone calls requiring local transmission or switching services for the purpose of the origination or termination of Telephone Toll Services. Switched Access Traffic includes, but is not limited to, the following types of traffic: Feature Group A, Feature Group B, Feature Group C, Feature Group D, toll free access (e.g., 8XX), 900 access and their successors. Additionally, any Public Switched Telephone Network interexchange telecommunications traffic, regardless of transport protocol method, where the originating and terminating points, end-to-end points, are in different LATAs, or are in the same LATA and the Parties' Switched Access services are used for the origination or termination of the call, shall be considered Switched Access Traffic. Irrespective of transport protocol method used, a call which originates in one LATA and terminates in another LATA (i.e., the end-to-end points of the call) or in which the Parties' Switched Access Services are used for the origination or termination of the call, shall not be considered Local Traffic or ISP-bound Traffic. If the BellSouth end user chooses AugLink as their presubscribed interexchange carrier, or if the BellSouth end user uses AugLink as an interexchange carrier on a 101XXXX basis, BellSouth will charge AugLink the appropriate BellSouth tariff charges for originating switched access services. Neither Party shall represent Switched Access Traffic as Local Traffic or ISP-bound Traffic for the purposes of determining compensation for the call.

5.3.11 If AugLink assigns NPA/NXXs to specific BellSouth rate centers within the LATA and assigns numbers from those NPA/NXXs to AugLink end users physically located outside of that LATA, BellSouth traffic originating from within the LATA where the NPA/NXXs are assigned and delivered to an AugLink customer physically located outside of such LATA, shall not be deemed Local Traffic. Further, AugLink agrees to identify such interLATA traffic to BellSouth and to compensate BellSouth for originating and transporting such interLATA traffic to AugLink at BellSouth's switched access tariff rates.

5.3.11.1 If AugLink does not identify such interLATA traffic to BellSouth, to the best of BellSouth's ability BellSouth will determine which whole AugLink NPA/NXXs on which to charge the applicable rates for originating network access service as reflected in BellSouth's Access Service Tariff. BellSouth shall make appropriate billing adjustments if AugLink can provide sufficient information for BellSouth to determine whether or not said traffic is Local Traffic.

6. The Parties hereby agree to delete Sections 4.2, 6.4.3 and 7.1 in Attachment 4 as amended on 4/18/2002 and replace them with new Sections below:

4.2 Occupancy. BellSouth will notify AugLink in writing that the Collocation Space is ready for occupancy ("Space Ready Date"). AugLink will schedule and complete an acceptance walkthrough of each Collocation Space with BellSouth within fifteen (15) calendar days of BellSouth's notifying AugLink that the Collocation Space is ready for occupancy. BellSouth will correct any deviations to AugLink's original or jointly amended requirements within seven (7) calendar days after the walkthrough, unless the Parties jointly agree upon a different time frame, and BellSouth shall establish a new Space Ready Date. Another acceptance walkthrough will then be scheduled and conducted within fifteen (15) calendar days of the new Space Ready Date. This follow-up acceptance walkthrough will be limited to those items identified in the initial walkthrough. If AugLink has met the fifteen (15) calendar day interval(s), billing will begin upon the date of AugLink's acceptance of the Collocation Space ("Space Acceptance Date"). In the event that AugLink fails to complete an acceptance walkthrough within this fifteen (15) calendar day interval, the Collocation Space shall be deemed accepted by AugLink on the Space Ready Date and billing will commence from that date. If AugLink decides to occupy the space prior to the Space Ready Date, the date AugLink occupies the space becomes the new Space Acceptance Date and billing begins from that date. AugLink must notify BellSouth in writing that collocation equipment installation is complete and is operational with BellSouth's network. BellSouth may, at its option, not accept orders for cross connects until receipt of such notice. For purposes of this paragraph, AugLink's telecommunications equipment will be deemed operational when cross-connected to BellSouth's network for the purpose of service provisioning.

6.4.3 Acceptance Walkthrough. AugLink will schedule and complete an acceptance walkthrough of each Collocation Space with BellSouth within fifteen (15) calendar days of BellSouth's notifying AugLink that the Collocation Space is ready for occupancy. In the event that AugLink fails to complete an acceptance walkthrough within this fifteen (15) day interval, the Collocation Space shall be deemed accepted by AugLink on the Space Ready Date. BellSouth will correct any deviations to AugLink's original or jointly amended requirements within seven (7) calendar days after the walkthrough, unless the Parties jointly agree upon a different time frame.

7.1 Recurring Charges. If AugLink has met the applicable fifteen (15) calendar day walkthrough interval(s) specified in Section 4, billing for recurring charges will begin upon the Space Acceptance Date. In the event that AugLink fails to complete an

acceptance walkthrough within the applicable fifteen (15) calendar day interval(s), billing for recurring charges will commence on the Space Ready Date. If AugLink occupies the space prior to the Space Ready Date, the date AugLink occupies the space becomes the new Space Acceptance Date and billing for recurring charges begin on that date.

7. The Parties hereby agree to delete Section 21, and 21.1 of General Terms and Conditions and add new Sections 17 and 17.1 in Attachment 4 as follows:

17. Insurance Requirements

17.1 At all times during the term of this Agreement, each Party shall maintain, at its own expense, (i) all insurance required by applicable Law including insurance and approved self insurance for statutory workers compensation coverage and (ii) commercial general liability coverage in the amount of not less than ten million dollars ($10,000,000) or a combination of commercial general liability and excess/umbrella coverage totaling ten million dollars ($10,000,000). Upon request from the other Party, each Party shall furnish the other Party with certificates of insurance which evidence the minimum levels of insurance set forth herein. Each Party may satisfy all or part of the coverage specified herein through self-insurance. Each Party shall give the other Party at least thirty (30) days advance written notice of any cancellation or non-renewal of insurance required by this Section.

8. Attachment 6, Section 1.1.7 hereby deleted in its entirety and replaced with a new Section 1.1.7 as follows:

1.1.7 Deposit Policy. When purchasing services from BellSouth, AugLink will be required to complete the BellSouth Credit Profile and provide information regarding credit worthiness. Based on the results of the credit analysis, BellSouth reserves the right to secure the account with a suitable form of security deposit. Such security deposit shall take the form of cash, an Irrevocable Letter of Credit (BellSouth form), Surety Bond (BellSouth form) or, in its sole discretion, some other form of security. Such security deposit shall be required prior to inauguration of service. Security deposits collected under this Section shall not exceed two months' estimated billing. The fact that a security deposit has been made in no way relieves AugLink from complying with BellSouth's regulations as to advanced payments. Any such security deposit shall in no way release AugLink from its obligation to make compete and timely payments of its bills. If in the sole opinion of BellSouth, circumstances so warrant and/or gross monthly billing has increased beyond the level initially used to determine the level of security, BellSouth reserves the right to request additional security and/or file a Uniform Commercial Code (UCC-1) security interest in AugLink's "accounts receivables and proceeds". In the event AugLink fails to remit to BellSouth any deposit requested pursuant to this Section, service to AugLink may be terminated in accordance with the terms of Section 1.8 of this Attachment, and any security deposit will be applied to AugLink's account(s). In the event service to AugLink is terminated due to AugLink's default on its account, any security deposits

held will be applied to AugLink's account. Interest on a security deposit, if provided in cash, shall accrue and be paid in accordance with the terms in the appropriate BellSouth tariff.

9. Attachment 8 will be deleted in its entirety and replaced with a new Attachment 8 attached hereto as Exhibit 2.

10. The Parties hereby agree to delete in entirety Attachment 13.

11. The Parties hereby agree to delete in entirety and replace the Florida rates contained in Exhibit D of Attachment 1, Exhibit A of Attachment 2, Exhibit A of Attachment 3, and Exhibit A of Attachment 7 with the rates in Exhibit 3 of this Agreement, as ordered in Florida Docket 990649-TP, issued October 18, 2001 and the September 27, 2002 120 Day UNE Order.

12. In the event that AugLink consists of two (2) or more separate entities as set forth in the preamble to this Agreement, all such entities shall be jointly and severally liable for the obligations of AugLink under this Agreement.

13. The term of this Agreement shall be from the effective date as set forth above and shall expire as set forth in Section 2.1 of the AT&T Interconnection Agreement. For the purposes of determining the expiration date of this Agreement pursuant to Section 2.1 of the AT&T Interconnection Agreement, the effective date shall be October 26, 2001.

14. AugLink shall accept and incorporate any amendments to the AT&T Interconnection Agreement executed as a result of any final judicial, regulatory, or legislative action.

15. Every notice, consent, approval, or other communications required or contemplated by this Agreement shall be in writing and shall be delivered in person or given by postage prepaid mail, address to:

BellSouth Telecommunications, Inc.

BellSouth Local Contract Manager
600 North 19th Street, 8th floor
Birmingham, Alabama 35203

and

ICS Attorney
Suite 4300
675 W. Peachtree St.
Atlanta, GA 30375

141

AugLink Communications, Inc.
Jay Jennision
5 Cordova St
Saint Augustine FL 32084
904-494-2322
jennison@aug.com

or at such other address as the intended recipient previously shall have designated by written notice to the other Party. Where specifically required, notices shall be by certified or registered mail. Unless otherwise provided in this Agreement, notice by mail shall be effective on the date it is officially recorded as delivered by return receipt or equivalent, and in the absence of such record of delivery, it shall be presumed to have been delivered the fifth day, or next business day after the fifth day, after it was deposited in the mails.

IN WITNESS WHEREOF, the Parties have executed this Agreement through their authorized representatives

BellSouth Telecommunications, Inc.	AugLink Communications, Inc.
Signature	Signature
Elizabeth R. A. Shiroishi	JOHN C. JENNISON JR
Name	Name
Director, Interconnection Services	President
Title	Title
24 Feb 2003	2-14-03
Date	Date

EXHIBIT 1

Exhibit 2

Attachment 8

Rights-of-Way, Conduits and Pole Attachments

Alexander Gallo Associates, Inc.
COURT REPORTING VIDEO SERVICES
• ATLANTA'S TECHNOLOGICAL LEADERS IN LITIGATION SUPPORT •

February 11, 2003

Loretta A. Cecil, Esquire
Womble Carlyle Sandridge & Rice
One Atlantic Center
1201 West Peachtree Street
Suite 3500
Atlanta, Georgia 30309

Case: In Re: AT&T Communications, et al., vs. BellSouth Telecommunications, et al.
Deposition of: Elizabeth R.A. Shiroishi
Deposition Date: January 13, 2003

Dear Ms. Cecil:

Enclosed please find the original Certificate and Errata Sheet to be attached to the outside of the Original transcript envelope in the enclosed see-through pouch. Also enclosed is a copy of the same for your file.

Should you have any questions, please do not hesitate to call.

Yours truly,

Keith P. Lander

Enclosures

cc: ANDREW D. SHORE, Esquire

ATLANTA, GEORGIA WASHINGTON, DC CHICAGO, ILLINOIS NEW YOR

Telephone (404) 495-0777
Facsimile (404) 495-0766
Toll Free (877) 495-0777

Complimentary Conference Rooms
Throughout Georgia And
Major Cities Nationwide

www.GalloReporting.com

500 The
127 P
Atlanta,

147

DEPOSITION ERRATA SHEET

RE: Alexander Gallo & Associates
File No. 3587
Case Caption: AT&T Communications of the Southern States, LLC, et al., vs. BellSouth Telecommunications, Inc.
Deponent: **Elizabeth R.A. Shiroishi**
Deposition Date: January 13, 2003

To the Reporter:
I have read the entire transcript of my Deposition taken in the captioned matter or the same has been read to me. I request that the following changes be entered upon the record for the reasons indicated. I have signed my name to the Errata Sheet and the appropriate Certificate and authorize you to attach both to the original transcript.

Page No. 4 Line No. 12 Change to: Global Naps, Florida

Reason for change: _____

Page No. 6 Line No. 15 Change to: Global Naps

Reason for change: _____

Page No. 7 Line No. 2 Change to: "followed" to "filed"

Reason for change: _____

Page No. 33 Line No. 15 Change to: "task" to "trunk"

Reason for change: _____

Page No. 41 Line No. 8 Change to: "defined in" to "combined on"

Reason for change: _____

Deposition of Elizabeth R.A. Shiroishi

Page No. 56 Line No. 7 Change to: "also" to "always"

Reason for change:

Page No. 75 Line No. 14 Change to: "participating" to "purchasing"

Reason for change:

Page No. 102 Line No. 2 Change to: "VoIP transmission is not going to be eligible for"

Reason for change:

Page No. 102 Line No. 3 Change to: "recip comp when it is interLATA. So that had to"

Reason for change:

Page No. 117 Line No. 5 Change to: "ATIS" to "ACNA"

Reason for change:

Page No. 124 Line No. 14 Change to: "payments" to "papers"

Reason for change:

SIGNATURE: [signature] DATE: 1/30/03

Elizabeth R.A. Shiroishi

13 Page No. 145 Line No. 7 Change to: "NOTAL" to "NODAL"
14
15 Reason for change:
16 Page No. 145 Line No. 10 Change to: "NOTAL" to "NODAL"
17
18 Reason for change:
19 Page No. 145 Line No. 11 Change to: "NOTAL" to "NODAL"
20
21 Reason for change:
22 Page No. 143 Line No. 22 Change to: "NOTAL" to "NODAL"
23
24 Reason for change:
25 Page No. Line No. Change to:
00159
1
2 Reason for change:
3 Page No. Line No. Change to:
4
5 Reason for change:
6 .
7 .
8 SIGNATURE: _____ DATE: 1/30/03
9 Elizabeth R.A. Shiroishi
10 .

CERTIFICATE

STATE OF Georgia:

COUNTY/CITY OF Fulton:

Before me, this day, personally appeared, **Elizabeth R.A. Shiroishi**, who, being duly sworn, states that the foregoing transcript of his/her Deposition, taken in the matter, on the date, and at the time and place set out on the title page hereof, constitutes a true and accurate transcript of said deposition.

Elizabeth R.A. Shiroishi

SUBSCRIBED and SWORN to before me this 30th day of JANUARY, 2003 in the jurisdiction aforesaid.

MICHEALE F. BIXLER
Notary Public, Douglas County, Georgia
My Commission Expires November 3, 2005

My Commission Expires Notary Public

COPY OF TRANSCRIPT

BEFORE THE NORTH CAROLINA UTILITIES COMMISSION

DOCKET NO. P-55, SUB 1376

IN THE MATTER OF:

AT&T COMMUNICATIONS OF THE
SOUTHERN STATES, LLC, TELEPORT
COMMUNICATIONS GROUP, INC.,
AND TCG OF THE CAROLINAS, INC.,

Complainants,

vs.

BELLSOUTH TELECOMMUNICATIONS, INC.,

Respondents.

DEPOSITION OF

ELIZABETH R.A. SHIROISHI

January 13, 2003
1:25 p.m.

Suite 4300
675 West Peachtree Street
Atlanta, Georgia

Alexander J. Gallo, CCR-B-1332, CRR

1 APPEARANCES OF COUNSEL

2

3 **On behalf of AT&T:**

4 LORETTA A. CECIL, Esq.

5 Womble, Carlyle, Sandridge & Rice

6 3500 One Atlantic Center

7 1201 West Peachtree Street

8 Atlanta, Georgia 30309

9 (404) 888-7437

10 lcecil@wcsr.com

11

12 **On behalf of BellSouth Telecommunications, Inc.:**

13 ANDREW D. SHORE, Esq.

14 BellSouth Legal Department

15 Suite 4300

16 675 West Peachtree Street

17 Atlanta, Georgia 30375

18 (404) 335-0743

19 andrew.shore@bellsouth.com

20

21 **Also Present:**

22 Jeffrey A. King

23 Bill Peacock

24 Nicole Bracy

25

1 Deposition of Elizabeth R.A. Shiroishi

2 January 13, 2003

3 ELIZABETH R.A. SHIROISHI, having been
4 first duly sworn, was examined and testified as
5 follows:

6 EXAMINATION

7 BY-MS.CECIL:

8 Q. Ms. Shiroishi, I am Loretta Cecil
9 with the law firm of Womble, Carlyle, Sandridge
10 & Rice. I am going to be taking your deposition
11 today in a proceeding that is pending before the
12 North Carolina Utilities Commission. It is
13 Docket No. P-55 Sub 1376. Let's begin by
14 getting information about you.

15 Would you state your name for the
16 record, please?

17 A. My name is Elizabeth R.A. Shiroishi.
18 That is S-h-i-r-o-i-s-h-i.

19 Q. And are you employed?

20 A. Yes. I am employed by BellSouth
21 Telecommunications.

22 Q. What is your business address?

23 A. 675 West Peachtree Street.

24 Q. What is your current title with
25 BellSouth?

A. Assistant Director, Interconnections Services.

Q. What is your age?

A. Twenty-seven.

Q. Have you ever been deposed before?

A. Yes.

Q. When?

A. I believe it was February of 1999.

Q. What proceeding would that have been in?

A. That was a complaint against BellSouth regarding global maps, Florida.

Q. Is that the only time you have been deposed?

A. Yes.

Q. Was that complaint pending before the Florida Public Service Commission?

A. Yes.

Q. What did you do to prepare for your deposition today?

A. Nothing outside of the ordinary. In the context of this case, I have reviewed documents and prepared testimony, and we received interrogatories that we had begun working on.

Q. Which documents did you review?

A. The agreements between BellSouth and AT&T. The meeting notes and minutes that we had from the negotiations. I think that is about it. And, obviously, the things that AT&T filed in this case.

Q. Are you the same Elizabeth R.A. Shiroishi who filed testimony in this proceeding on behalf of BellSouth on December 18, 2002?

A. Yes.

Q. Why were you selected to file that testimony in that proceeding for BellSouth?

MR. SHORE: Object to the extent that calls for an attorney/client privilege or work product.

You can answer it, Ms. Shiroishi, to the extent you have an answer.

THE WITNESS: This function is part of my job as it currently is. Additionally, I was involved in the negotiations of the agreement and am aware of the subject matter involved therein.

Q. (By Ms. Cecil) When you say this function, what do you mean?

A. My role is over the CLEC negotiations group, and any dispute coming from

1 an interconnection agreement could possibly fall
2 under my responsibilities.
3 Q. In the matter pending in Florida
4 where you had your deposition taken in that
5 proceeding, was that an interconnection complaint
6 dispute?
7 A. Yes.
8 Q. In what other proceedings have you
9 filed testimony on behalf of BellSouth?
10 A. I have filed testimony in the
11 generic docket in Florida concerning the
12 intercarrier compensation. There are two phases
13 to that -- actually, three phases to that
14 docket, and I filed in phase one and three.
15 The global maps complaint, in Florida
16 there was a case, Atlantic Telecommunications, an
17 arbitration actually, with BellSouth that I filed
18 testimony in that did not go to hearing. Or,
19 actually, it was stipulated into the record.
20 Q. I am sorry to interrupt you, but
21 which state was the Atlantic Telecom arbitration?
22 A. Florida.
23 Q. Was that before the Florida Public
24 Service Commission?
25 A. Yes.

Q. I am sorry.

A. I followed testimony in Georgia, a complaint that TCG brought against BellSouth, which did not go to hearing. I believe that is all. I am trying to remember.

Q. Let's talk about your educational background for a few minutes. In your December 18, 2002 testimony, you stated you graduated from Agnes Scott with a B.A. in Classical Languages and Literature; is that correct?

A. Yes.

Q. Do you have any other colleges degree?

A. No.

Q. Before going to college, did you have any experience in the telecommunications industry?

A. No. Can I back up for a second? I do have a minor in music with that same degree, my Bachelor's.

Q. Who was your first employer after graduating from college?

A. Newton County Schools.

Q. What was your position there?

A. I was a high school teacher.

1 Q. For how long?
2 A. For one year.
3 Q. In your testimony on December 18,
4 2002, you also state that you joined BellSouth
5 in 1998 as a pricing analyst; is that correct?
6 A. Yes.
7 Q. What educational work experience did
8 you have to qualify you for that position of
9 pricing analyst?
10 A. Most specifically just spreadsheet
11 type analysis skills, working with Excel and
12 data. No specific training in communications.
13 Q. Or pricing, economics?
14 A. Some courses in economics.
15 Q. How long did you remain a pricing
16 analyst after you first joined BellSouth?
17 A. One year.
18 Q. What was your next job?
19 A. I moved into a position as
20 collocation product manager.
21 Q. When you moved into that position,
22 was it a promotion from the pricing analyst
23 position?
24 A. It was.
25 Q. Who did you report to in the

1 collocation product manager position?
2 A. In the beginning, I reported to
3 David Thierry, and then he left to take a new
4 position and I reported to Bernard Shell.
5 Q. What were your responsibilities in
6 that collocation product management position?
7 A. I was responsible for the product of
8 collocation, including funding type requests,
9 needs. Collocation is a very regulated product,
10 so ensuring regulatory compliance, making
11 decisions about contract language regarding
12 collocation, profit and loss of the product,
13 although that is, again, a different type
14 environment, and regulated offering. Those are
15 the main categories.
16 Q. What experience did you have in the
17 pricing analyst job that qualified you for the
18 collocation product management position?
19 A. I am not sure that the pricing
20 analyst directly related to the collocation
21 product management. I did have some experience
22 as a pricing analyst in working with some of
23 the collocation product and some of the projects
24 that were going on and the regulatory
25 environment around that.

1 Q. What experience did you have
2 regarding local interconnection whenever you
3 moved into the collocation production manager
4 position?
5 A. What experience did I have with
6 local interconnection?
7 Q. Yes.
8 A. As an overall subject or the product
9 itself?
10 Q. Overall subject.
11 A. Having worked at BellSouth for a
12 year at that point, obviously I had been
13 familiar with the regulation, the Act, the
14 orders that we are subject to, and those types
15 of documents and proceedings.
16 Q. Were you familiar with how networks
17 are designed at the time you assumed the
18 collocation product manager position?
19 A. To a certain extent, although not in
20 detail. Overall architecture as far as the
21 products that we offer, but not in any way a
22 network design.
23 Q. Did you have any knowledge at the
24 time you assumed the collocation product manager
25 position about network architecture as designed

1 by competing local exchange carriers?
2 A. Yes. I was familiar with -- the
3 environment I was working in dealt directly with
4 CLECs and alternative local providers, and I was
5 familiar with that and how we interconnect.
6 Q. How did working as a pricing analyst
7 give you exposure to the network architecture of
8 CLECs?
9 A. Some of the projects I work on
10 revolve around pricing and how we price products
11 related to the network, so I had to be familiar
12 with how the actual network laid out and, when
13 you were purchasing those products, what piece
14 parts went with it, things like that.
15 Q. What exactly did you do in the
16 pricing analyst job?
17 A. Different areas. A lot of it was
18 price points around services that other ILECs
19 offer as well as the CLECs offer competing,
20 looking at the different product sets and how
21 our products compare, doing price points on
22 that.
23 Again, understanding typical
24 configurations and what would go into a typical
25 configuration and what that price point would

be. Looking at the crossovers between different products that BellSouth offers and the elasticities.

Q. From what you described, it sounds more like a pricing analyst position relative to BellSouth's retail offerings as opposed to wholesale offerings.

MR. SHORE: Object to form.

You can answer.

THE WITNESS: No. All of my work was around the wholesale offerings, around the tariffs and like products.

Q. (By Ms. Cecil) You didn't do any analysis relative to retail offerings by BellSouth?

A. I do not recall doing any. I don't off the top of my head. Most of them were around the E-access tariffs, which is wholesale type offerings.

Q. I think, as you indicated earlier, when you went into that pricing analyst position you didn't have much experience, if any, in the telecommunications industry; is that correct?

A. That is correct.

Q. And just to make sure I understand

1 the timing, you had one year of pricing analyst
2 before you went into the collocation product
3 manager position?
4 A. Correct.
5 Q. How long did you stay in the
6 collocation product manager position?
7 A. For six months.
8 Q. Where did you move to after that?
9 A. I became an interconnection agreement
10 negotiator.
11 Q. Was that a promotion for you?
12 A. No, that was not.
13 Q. Why did you stay in the collocation
14 production manager position only six months?
15 A. At that point, decided for career
16 purposes to move into a different position to
17 gain more exposure to different areas of the
18 business.
19 Q. Were you asked to leave that
20 position?
21 A. No.
22 Q. Did you apply through a company
23 website for the interconnection position that you
24 described?
25 A. I do not recall.

1 Q. How did you get that job?
2 A. That job is housed within the same
3 group as the collocation product management job,
4 and it was an interdepartmental move.
5 Q. So when you went into interconnection
6 negotiation, you had been with BellSouth
7 approximately one year and six months; is that
8 correct?
9 A. Yes.
10 Q. And the job that you just described
11 as interconnection, working on interconnection
12 matters, is the job title for that assistant
13 director interconnection services marketing?
14 A. The job that we are talking about
15 that I moved into next?
16 Q. Yes.
17 A. No. My title was just negotiator or
18 manager.
19 Q. Negotiator. Who did you report to
20 when you were negotiator?
21 A. At that point, I reported to Ida
22 Bourne.
23 Q. What level of management was your
24 position when you were negotiating? When I
25 refer to that, I mean the first tier level,

1 second tier level, fifth tier level?
2 A. It is kind of an intermediate second
3 level. Not first level, but a tier between
4 first level and where you actually become a
5 supervisor.
6 Q. How long did you stay in this
7 negotiations position?
8 A. I do not recall off the top of my
9 head how many months that was. I believe it
10 was until around October of 2000, but I would
11 have to go back and look.
12 So that was approximately maybe a
13 year, approximately.
14 Q. So you were in the negotiations
15 position for about a year?
16 A. Yes. I was promoted while in that
17 position.
18 Q. What were you promoted to?
19 A. It was the same position, but with
20 more responsibilities. I took on larger CLECs
21 and had a greater number of contracts that I
22 managed.
23 Q. And are you in that same position
24 today or have you moved to another position
25 since then?

1 A. No. I have moved since then.
2 Q. Okay. And let's kind of take it in
3 order, then. How long did you stay in the
4 position where you were promoted and working on
5 larger CLECs?
6 A. I stayed in that until -- again, I
7 am going have to go back and look for exact
8 dates, but until around mid 2000, at which time
9 I took on responsibilities of managing
10 negotiators, managing the group that does our
11 quality control for processing of contracts, and
12 also working with local interconnection as a
13 product.
14 Q. So you were managing negotiators --
15 A. Yes.
16 Q. -- when you got promoted?
17 A. Yes.
18 Q. And you think that promotion was
19 around mid 2000?
20 A. Yes.
21 Q. Is that the current job you now
22 have?
23 A. No.
24 Q. How long were you in the position of
25 quality control managing negotiators?

A. I was in that position until, I guess that might have actually been more like third quarter of 2000 that that happened. And moved into a position -- well, actually, I guess the best way to phrase it is our group transitioned to a different group. So the position stayed the same, few responsibility changes, until -- I guess that was December, sometime in the mid -- end of 2000, early 2001 time frame, maybe March 2001 time frame.

At that point I picked up additional responsibilities of some inter BellSouth workings of processes and governance process and continued with the local interconnection product and acting as a subject matter expert for that product in negotiations.

And then in August of 2002 moved into a position which is now entitled assistant director of negotiations, having responsibility for all interconnection negotiations with CLECs and negotiators who handle that.

Q. So you moved into your current position August of 2002; is that correct?

A. Yes.

Q. And that is the one you referred to

in your testimony, assistant director interconnection communications management?

A. Yes.

Q. What level of management with BellSouth?

A. It is hard to quantify. I don't know what scale you are thinking in terms of. That is a position right under director level at BellSouth.

Q. What is the director level of BellSouth? What level? You said that --

A. Pay grade --

Q. Well, you indicated earlier when we talked about one of your earlier positions, you said somewhere between first and second level. Your current position on that scale, where does it fall?

A. I would say third, fourth level.

Q. So you have been with BellSouth since 1998, and it looks like you moved to at least five to six positions in that time frame?

A. Yes.

Q. And you have been promoted three times or twice?

A. Four times.

1 Q. You have been promoted four times in
2 that time frame?
3 A. Yes.
4 Q. All right. Let's try to figure out
5 where you were in the context of some of the
6 agreements that you refer to in your testimony.
7 What position did you have when AT&T and
8 BellSouth were negotiating the Mississippi
9 Interconnection Agreement?
10 A. I am not sure when those
11 negotiations started. I was not involved at the
12 start of those negotiations.
13 Q. Were you involved ever in the
14 Mississippi negotiations?
15 A. Yes. I believe towards the end of
16 those negotiations is when I first took over
17 local interconnection as a product. And there
18 were other people involved, most specifically Ed
19 Honeycutt was also involved, but I believe that
20 was at the end of the Mississippi negotiations.
21 Q. How close to the end?
22 A. Again, I am not sure of the scope
23 of it, but it was when a lot of issues had
24 already been resolved. They were just
25 finalizing the end of that agreement.

1 Q. So you were not involved in any
2 substantive negotiations for the Mississippi
3 Interconnection Agreement?
4 A. I was involved in some. Yes, I
5 would consider some substantive issues in the
6 Mississippi Agreement, but again, at the end.
7 Q. Which ones?
8 A. I don't recall off the top of my
9 head. I know that at the end we did work
10 through some language changes and were involved
11 in some calls.
12 Q. Let's kind of go through some of the
13 issues in the Mississippi Agreement. Definition
14 of local traffic, were you involved in that
15 negotiation?
16 A. No. That issue had already been
17 agreed to and closed before I was involved.
18 Q. Compensation for dial-up and traffic
19 to ISPs?
20 A. I believe that that may have been
21 still an open issue when I took it over.
22 Q. What involvement, if any, did you
23 have regarding that issue, if you were involved
24 in those negotiations?
25 A. That agreement was we were trying to

1 come up with solutions to not have to arbitrate
2 in the state of Mississippi. So we were
3 looking for issues or ways that both parties
4 could resolve that issue without arbitrating.
5 And I believe we had kind of agreed
6 on a concept when I came in, but we still had
7 to work on the language.
8 Q. Well, when I asked the question,
9 what was your involvement, what was your
10 personal involvement, not the corporate
11 BellSouth, but what was your personal involvement
12 in trying to resolve how dial-up traffic to ISPs
13 would be compensated in that Mississippi
14 agreement?
15 A. I am not sure I understand what you
16 are asking.
17 Q. Did you personally do anything
18 relative to the issue of how dial-up traffic to
19 ISPs would be compensated under the Mississippi
20 Interconnection Agreement?
21 A. I don't recall. That issue was
22 worked by several people at BellSouth, and I do
23 not recall if I was involved in that particular
24 agreement on that issue. I did become involved
25 in dial-up ISP compensation for the other states

later, and I don't recall if Mississippi was already closed out at that time or not.

Q. What about the language in the Mississippi Agreement that deals with percent local usage, percent interstate usage, did you have any involvement in those two provisions?

A. I don't recall the negotiations of those after I took it over. Again, the evolution of negotiations, the parties go back and forth on the language. Things get agreed to at different times. And then, obviously, the document as a whole gets agreed to at the final and signed. I do not recall any discussions about Mississippi with those two issues.

Q. Did you attend any face-to-face meetings with AT&T negotiators for the State of Mississippi in that Interconnection Agreement?

A. Yes. I believe so. I know I was involved with conference calls in meetings, and I believe some of them were face-to-face.

Q. And again, you don't know when that occurred, when you sort of exactly moved into those negotiations?

A. It was, again, the late 2000 time frame, but I am not exactly sure. Mid 2000,

1 October 2000, sometime around there.
2 Q. Was your participation at that point
3 in time as a supervisor seeing what the
4 negotiations were, or were you actually working
5 on language and proposing concepts for resolving
6 issues?
7 A. No. We were actually transitioning
8 that product as a product offering from one
9 product manager to myself and Ed Honeycutt, so I
10 was actually involved as more the subject matter
11 on that. Again, in a transition, Tim Watts was
12 leaving that position and transitioning that
13 over, so we were all involved for a while, and
14 then it transitioned to Ed and myself.
15 Q. When you say we were transitioning
16 the product, what do you mean by product?
17 A. The product of local interconnection
18 is a product within BellSouth we offer, and it
19 is managed by one manager or two. So we were
20 transitioning the person who was responsible for
21 that.
22 Q. Can you name any issues that you
23 specifically remember that you were involved in
24 in the Mississippi interconnection negotiations?
25 A. I specifically remember being involved

1 with the compensation on trunks and facilities
2 issue.
3 Q. And how would you describe that
4 issue?
5 A. The issue is how the parties are
6 going to compensate each other for the use of
7 dedicated trunks and facilities for the exchange
8 of traffic.
9 Q. So it was limited to dedicated
10 trunks only?
11 A. Yes.
12 MS. CECIL: Can we go off the
13 record just a second, please?
14 (Discussion ensued off the record.)
15 MR. SHORE: I don't want to go off
16 the record. To the extent she is providing you
17 information in a deposition, I think we need to
18 have it --
19 MS. CECIL: Let's go back on the
20 record, then.
21 Q. (By Ms. Cecil) Ms. Shiroishi, I
22 just handed you a copy of the Mississippi
23 Interconnection Agreement between AT&T and
24 BellSouth. Can you turn to that agreement and
25 show me which provisions you say you negotiated

1 relative to dedicated trunks and facilities?
2 A. One of the sections is 1.8 dealing
3 with billing interface --
4 MR. SHORE: Let me interrupt. When
5 you say 1.8, are you dealing with the main
6 agreement or some attachment, so the record is
7 clear?
8 THE WITNESS: Attachment 3 of the
9 Mississippi Agreement.
10 And section 1.9. Those are the two
11 main sections.
12 There are other associated sections.
13 Do you want me to point those out?
14 Q. (By Ms. Cecil) Yes.
15 A. Section 3.5.7.
16 MR. SHORE: Section 6.1.7 of
17 Attachment 3. Section 6.1.8. And then the
18 rate sheets are associated, Exhibit A of
19 Attachment 3.
20 Q. (By Ms. Cecil) Okay. Are there
21 any other provisions of that Mississippi
22 Interconnection Agreement, now that you have it
23 before you, that you personally were involved in
24 the negotiations with AT&T?
25 A. Again, there may be. To the best

1 of my recollection, I remember those
2 specifically. Section 6.1.5 may also have been a
3 section we covered.
4 Others we may have been closing out,
5 not language, but the concepts we were agreeing
6 to. But those are the ones I specifically
7 remember.
8 Q. Ms. Shiroishi, as I look at those
9 paragraph provisions, section provisions you just
10 mentioned, it seems to me those relate to how
11 the trunks would be ordered and how they would
12 be paid for; is that correct?
13 A. Yes, in certain circumstances.
14 Q. And did not have to do with what
15 kind of traffic would be placed over those
16 trunks; is that correct?
17 A. I would have to look back at the
18 language. I didn't review it to see. But
19 typically the language in 1.8, it talks about
20 local traffic and ISP-bound traffic. It says
21 that -- basically, it is defining a BPOI as the
22 point of interface specified by BellSouth for
23 BellSouth originated traffic to AT&T for which
24 AT&T agrees to pay BellSouth for interoffice
25 dedicated transport and associated multiplexing

1 for BellSouth to transport local traffic and
2 ISP-bound traffic.
3 Q. Could I stop you there?
4 But again, that doesn't relate to
5 the price that would be paid for terminating
6 that particular type of traffic over those
7 facilities; is that correct.
8 MR. SHORE: Object to the form.
9 You can answer.
10 THE WITNESS: This section is
11 talking specifically about the price or the rate
12 element for the trunk and facility itself, if
13 that is your question.
14 Q. (By Ms. Cecil) Not the traffic that
15 goes over it?
16 A. Right. Correct.
17 Q. Would you look at the other section
18 to see if they relate to pricing for the type
19 of traffic that goes over those trunks for
20 interconnection facilities?
21 A. When you say traffic, you are
22 speaking in minutes of use, termination traffic?
23 Q. Yes.
24 A. The 1.9, again, is talking about the
25 rates for the flat rated type trunks and

1 facilities charges and associated multiplexing.
2 Q. You also mentioned 6.1.7 and 6.1.8?
3 A. Yes. All those sections are dealing
4 with the flat rated type trunks and facilities
5 charges.
6 6.1.5, which is not necessarily
7 related to this issue but I did reference
8 earlier, does talk about dedicated and/or common
9 or shared transport, so that would include
10 minutes of use. But that is a separate
11 provision.
12 Q. And again, just so I am clear, are
13 you sure you personally worked on or associate
14 negotiated 6.1.5 or you are not clear?
15 A. I don't recall without going back
16 through the notes from those negotiations.
17 Q. Okay. Now, relative to the various
18 positions you had at BellSouth, I also want to
19 see if I can understand where you were, in what
20 position, whenever the negotiations started for
21 the North Carolina Interconnection Agreement.
22 Do you remember when the North
23 Carolina interconnection negotiations started?
24 A. I do not know the date when they
25 started.

1 Q. Were you involved in those
2 negotiations from the start?
3 A. No, no. The AT&T negotiations were
4 begun before my involvement, and both parties
5 filed for arbitration in the state of North
6 Carolina with their own proposed language. I
7 became involved with the negotiations after that
8 arbitration was filed and when the parties were
9 trying to resolve some of the issues outside of
10 -- at that point we were waiting on a
11 Commission order -- but to see if we could
12 resolve some issues further or agree to
13 additional things outside of the arbitration.
14 Q. Okay.
15 A. Can I take a quick break?
16 Q. Sure.
17 (A recess was taken.)
18 Q. (By Ms. Cecil) Ms. Shiroishi,
19 before we went off the record at the break, I
20 believe you indicated that you were involved in
21 the North Carolina negotiations towards the end
22 of those negotiations after AT&T and BellSouth
23 had already been through the arbitration at the
24 Commission, the North Carolina Commission?
25 MR. SHORE: Object to the form.

1 You can answer.
2 THE WITNESS: Yes. There were
3 actually still fairly substantial negotiations
4 that went on, but it was towards the end. The
5 parties had negotiated, filed for arbitration,
6 and this was after that. And I believe,
7 actually, the hearing had taken place. I am
8 not positive about that. And we were trying to
9 resolve issues from a regional standpoint on
10 some other issues.
11 Q. (By Ms. Cecil) Now, when you got
12 engaged in the North Carolina negotiations, were
13 you also involved in negotiations relative to
14 the ordering and compensation for dedicated
15 trunks, as you described you were in
16 Mississippi?
17 A. That was an issue that we discussed
18 in the context of the other eight states. I
19 am not sure I understood the form of your
20 question.
21 Q. When you began work on the North
22 Carolina negotiations, were you also negotiating
23 issues related to trunking?
24 A. Yes.
25 Q. What is your definition of a trunk

1 as you understand telecommunications network
2 architecture?
3 A. From a layman's term, a trunk is a
4 channel or an activation on a facility.
5 Q. Where is it within the network?
6 A. The trunk resides on the switch.
7 Q. Where does it go?
8 A. Typically there are -- you can have
9 trunk-to-trunk connections, which would mean each
10 switch has a trunk type plug-in, very
11 untechnical term, that makes those two switches
12 talk to each other.
13 Q. Are there other situations where
14 trunks would be used other than trunk-to-trunk?
15 A. You can also have line side
16 connections, but trunking is typically done
17 switch to switch.
18 Q. Why are certain facilities referred
19 to as trunks within the industry?
20 A. This gets into some non-technical
21 term and perhaps mixing of it. But I think
22 typically facilities are thought of as the pipe
23 or the transport. Trunks are actually thought
24 of as the mechanics on that to, again, activate
25 it and make it talk.

1 Q. So when you use the terminology
2 trunks, you are not referring to the actual
3 facilities?
4 A. Typically we say trunks and
5 facilities. Trunk groups is another way of
6 talking about trunks and facilities. The trunk
7 group itself would actually include the facility.
8 Q. And trunks can carry different types
9 of traffic; is that not correct?
10 A. Yes.
11 Q. What kind of traffic can trunks
12 carry?
13 A. Any type -- trunking is basically a
14 mechanism to make the trunks talk to each other.
15 So in this architecture we are typically talking
16 circuit switch. There is also a packet.
17 Q. What about the jurisdictional nature
18 of the traffic that flows over trunks and
19 facilities, to use your terminology, what type
20 of jurisdictional traffic flows over trunks and
21 facilities?
22 A. All types. I mean, local,
23 interstate and intrastate.
24 Q. So you named three types there,
25 local, interstate, and intrastate?

1 A. Yes.
2 Q. Is it not true that the type of
3 trunk or facilities that are used does not vary
4 depending on whether it is local, interstate, or
5 intraLATA traffic?
6 A. There are some differences in
7 different types of trunk groups and the
8 signalling that goes along with them with
9 switched access type traffic versus local
10 interconnection type traffic.
11 Q. What are those differences?
12 A. I am not the expert on those issues.
13 But there are -- it is my understanding there
14 are signal differences as well as record type
15 differences on the task.
16 Q. So you would disagree with the
17 terminology that a trunk is a trunk is a trunk?
18 A. No, I don't think that is the
19 question, a trunk is a trunk. The issue is
20 how are those trunk groups configured and do
21 they work the same for switched access type
22 traffic which has to carry with it different
23 records and signalling than with local type
24 traffic which may not have the same records and
25 signalling.

1 Q. Well, the question is do those
2 trunks work the same for local, interstate, or
3 intraLATA traffic?
4 A. It is my understanding there are
5 differences, most specifically on the originating
6 end.
7 Q. Who do you understand that from?
8 A. From talking within our company to
9 the groups that deal with trunking and how that
10 is done.
11 Q. So that is not your personal
12 opinion, that is what someone at BellSouth has
13 told you?
14 A. Correct.
15 Q. So I take from that you are not a
16 trunking or facilities expert, that you rely on
17 others from BellSouth for that expertise?
18 A. Correct.
19 Q. Can you tell me the different
20 information that the trunk would have to
21 accommodate for a local call versus an intraLATA
22 call?
23 A. I cannot give you specifics on that.
24 Again, that is not my subject matter expert
25 area.

1 Q. How about the differences between
2 intraLATA traffic and interLATA traffic?
3 A. IntraLATA traffic and the signalling
4 associated therein, again, I don't think there
5 are the differences. We have trunk groups
6 called local toll trunk groups that carry that
7 type of traffic together. But there are
8 differences between that and interLATA switched
9 type access.
10 Q. So it is true that trunks can carry
11 all types of the traffic, local, intraLATA, and
12 interLATA; is that correct?
13 A. Again, on the originating end, I do
14 not believe local traffic can be combined over
15 the same originating trunk group as switched
16 access.
17 Q. And your belief is based on what,
18 your own personal knowledge or expertise or what
19 someone at BellSouth told you?
20 A. That is based on my experience in
21 working that issue for a separate carrier who
22 wished to combine originating local traffic over
23 switched access trunk groups and the discussions
24 that went into that and in working with other
25 people at BellSouth to understand the

1 difficulties there.
2 Q. Which carrier was that?
3 A. Sprint.
4 Q. And what was the specific experience
5 that led you to believe from your own personal
6 opinion that you cannot combine those three
7 types of traffic for purposes of originating
8 your traffic?
9 A. The fact we do not have the
10 capability within our system as it exists today
11 to provide them with that request.
12 Q. So that was a BellSouth capability,
13 not a capability on the side of Sprint; is that
14 correct?
15 A. I don't know if Sprint had the
16 capability at the time or not, but I know that
17 was a BellSouth issue we were running.
18 Q. So is it your position that
19 currently BellSouth doesn't terminate traffic for
20 a CLEC that runs over the same trunk and has a
21 mixture of local, intraLATA and interLATA traffic
22 on it?
23 A. No. Terminating is a different
24 issue. I am talking about originating. On the
25 terminating end, I do believe it is technically

able to be combined.

Q. Terminating, okay. And, in fact, that is the case with respect to termination of traffic for AT&T, is it not?

A. What? I am sorry.

Q. That all three types of traffic are combined on the same trunk group for purposes of BellSouth terminating AT&T traffic?

A. I guess that gets back to how you define the jurisdiction. Obviously, that is an issue in this case.

Q. Well, the issue is does AT&T currently send traffic to BellSouth which BellSouth terminates which includes local, intraLATA, and interLATA on the same trunk?

MR. SHORE: Is that the question now to her?

MS. CECIL: Yes.

THE WITNESS: Again, I guess it gets back to how are we defining local? In terms of end points of the call, yes. But in terms of what the parties agree to for compensation purposes, that might be a different answer.

Q. (By Ms. Cecil) My question is does BellSouth have the ability to receive traffic

1 from AT&T and terminate traffic from AT&T that
2 has local, intraLATA, and interLATA traffic on
3 the same trunk?
4 A. How are you defining local?
5 Q. Local as defined in the
6 interconnection agreements.
7 A. Well, I think I am having difficulty
8 with the question because that is what the
9 parties' disagreement is about, what that
10 definition of local is.
11 Q. Well, Ms. Shiroishi, what I am
12 trying to get at in these questions is, is it
13 technically feasible for AT&T to send over
14 traffic which AT&T believes to be either local,
15 intraLATA or interLATA on the same trunk group?
16 A. And for termination purposes?
17 Q. For termination purposes.
18 A. Yes, it is technically feasible.
19 Q. So the testimony you filed in North
20 Carolina on December 18, you were not trying to
21 tell the Commission there that AT&T needs to
22 have a separate set of trunk groups for only
23 local traffic, a separate set of trunk groups
24 for only interLATA and a separate set of trunk
25 groups for intraLATA; is that correct?

1 A. I think that gets to what you mean
2 by AT&T has to. The parties agreed to a
3 compensation scheme based on SWA trunk groups.
4 So, therefore, from a technically feasible
5 standpoint, I haven't addressed anything in my
6 testimony to talk about what is and isn't
7 technically feasible.
8 What the issue at hand in this case
9 is is how are those calls going to be
10 compensated. And for purposes of what the
11 parties agreed to, the definition of local
12 traffic does exclude anything that terminates
13 over switched access trunk groups.
14 Q. I understand your testimony. But my
15 point gets to the technical feasibility and
16 clarifying what impression you were trying to
17 leave with the North Carolina Commission, and I
18 want to make sure I understand.
19 You were not telling the North
20 Carolina Commission that technically AT&T has to
21 have a separate trunk group for local traffic?
22 MR. SHORE: Object to the form to
23 the extent she has answered the question
24 already.
25 If you have a different answer, go

1 ahead and provide it.
2 THE WITNESS: My answer is the same.
3 I haven't addressed anything technical
4 feasibility-wise in my testimony. What I have
5 addressed is what the parties agreed to would be
6 governed by -- or what would govern the
7 compensation arrangements around traffic.
8 Q. (By Ms. Cecil) I am going to ask
9 you the question again. Is it technically
10 feasible for AT&T to send traffic to BellSouth
11 for termination which includes local, intraLATA
12 and interLATA on the same trunk group?
13 MR. SHORE: Same objection.
14 Ms. Shiroishi, if you don't have
15 anything else to say, I think it is appropriate
16 to say that. If you have got some further
17 testimony that you can give, if she should ask
18 the question a ninth or tenth time, you
19 certainly are obligated to do that.
20 THE WITNESS: The difficulty in the
21 question comes around the phrasing of local and
22 how we are considering local. It is technically
23 feasible to combine those, any jurisdictional
24 type traffic, for termination. When we
25 pigeonhole and define what is local, if we are

1 talking in terms of how we compensate each
2 other, then it does have a bearing on what the
3 parties agreed to. That is why I am hesitant
4 to answer the question a certain way because the
5 issue revolves back to compensation.
6 From a technical feasibility
7 standpoint, traffic from a next door neighbor to
8 a next door neighbor could be defined in the
9 same trunk group for terminating as traffic from
10 a next door neighbor to someone in a neighboring
11 state. For compensation purposes, the parties
12 agreed that those calls would be handled in
13 accordance with the way that they are routed.
14 So, therefore, I don't want to state
15 that, yes, that would then be local, because for
16 purposes of the compensation in the agreement
17 the parties agreed that how they would be routed
18 would have a bearing on whether it was local or
19 not.
20 Q. (By Ms. Cecil) You say the parties
21 agreed. Where did the parties agree that
22 certain traffic would not be considered local?
23 A. In the definition of -- well, in the
24 provision dealing with local traffic. I believe
25 that it was originally 5.3.1; although, I would

1 want to check that reference to be sure I am
2 correct.
3 Q. Is that the section of the agreement
4 that refers to switched access arrangements?
5 A. Yes, that phrase is in there.
6 Q. What defines a trunk group as being
7 a switched access arrangement under the
8 agreement?
9 A. Well, switched access arrangements are
10 set forth in our tariff and are defined very
11 specifically in the tariff.
12 Q. So is it your testimony that your
13 tariff includes the terminology switched access
14 arrangements?
15 A. I do not know if that term is used
16 in the tariff or not. The tariff describes
17 multiple switched access arrangements through
18 Feature Group A, Feature Group B, Feature Group
19 C and D, all of which are called switched
20 access in there. I don't know if it uses the
21 term switched access arrangements or not.
22 Q. How do we know what is in the
23 tariff is a switched access arrangement?
24 A. Because the tariff is clear those
25 are switched access offerings for sale.

1 Q. So where did this terminology
2 "switched access arrangements" come from?
3 A. Switched access arrangements is, I
4 guess, an aggregate term used for all of the
5 switched access offerings.
6 Q. By whom?
7 A. Used in the tariff.
8 Q. So you are saying the terminology
9 "switched access arrangements" is a BellSouth
10 term of art?
11 A. No. I think that is a general term
12 used in the industry to describe all switched
13 access offerings.
14 Q. When you say offerings, you are
15 talking about tariffed offerings?
16 A. Yes.
17 Q. That is commonly known in the
18 industry, is that what you are saying?
19 A. I have never run across anyone who
20 was not aware of what switched access
21 arrangements were.
22 Q. How long have you been doing this
23 work?
24 A. Four and a half years.
25 Q. And are you saying it is common in

1 the industry that everyone knows what the
2 terminology "switched access arrangements" mean?
3 MR. SHORE: I object. That is
4 argumentative. That is duplicative. You
5 cross-examined her on the 27th, but she doesn't
6 have to give the same testimony twice.
7 MS. CECIL: My question is because
8 this is --
9 MR. SHORE: That is the same
10 question. Ask a new question.
11 MS. CECIL: I will.
12 Q. (By Ms. Cecil) Is there anywhere in
13 the North Carolina Interconnection Agreement that
14 is in dispute here that there is a definition
15 of switched access arrangements?
16 A. I don't believe so.
17 Q. Have you checked it?
18 A. I have not done a search on that
19 agreement for switched access arrangements
20 outside of that area, no.
21 Q. So you filed this testimony talking
22 about what switched access arrangements meant and
23 you did not search the agreement to see if it
24 had a definition of switched access arrangements?
25 A. I do not believe that it does.

1 Q. Now, isn't it true, Ms. Shiroishi,
2 that all trunk groups are ordered under an
3 access server request?
4 A. Yes, that is true.
5 Q. Do you know what an access server
6 request is?
7 A. It is the ordering form used to
8 order switched access trunks and facilities and
9 local interconnection trunks and facilities.
10 Q. Okay. Now, I want to go back to
11 where you were in the negotiations of the North
12 Carolina Agreement.
13 The position that you held at the
14 time when you came in towards the end of the
15 negotiations, is that the current position that
16 you have now at BellSouth?
17 A. It is not the current job
18 responsibilities that I have, but it is the same
19 level of management.
20 Q. What were you doing in the North
21 Carolina negotiations that you are not doing
22 today?
23 A. At that time I had responsibility
24 for the local interconnection product management
25 negotiations. I guess that is the only thing I

had then that I am not doing now.

Q. So you are not doing negotiations now?

A. Excuse me. I have the group that negotiates agreements, but I don't have that specific product -- well, actually I should qualify that. I am interim covering that product while the normal person is out on maternity leave, but that is a temporary.

Q. And just one more clarification. With respect to what you were doing when you first began the North Carolina negotiations, was that in a supervisory position or was that in sort of a front line's negotiation perspective?

A. For that job responsibility, I was the person responsible for doing it. Ed Honeycutt worked also on that but did not work for me. We were peers. I did have supervisory responsibilities at the time.

Q. Who were your supervisors at the time?

A. My supervisors?

Q. Yes.

A. Jerry Hendrix.

Q. So when you were involved in the

1 North Carolina negotiations at the end of the
2 process, your supervisor was Jerry Hendrix?
3 MR. SHORE: Object to the form.
4 THE WITNESS: Yes.
5 Q. (By Ms. Cecil) Describe for me the
6 issues that you worked on in the context of the
7 North Carolina negotiations, ones where you were
8 personally involved?
9 A. We worked on the issue of
10 compensation for ISP-bound traffic. We worked
11 on the issue of definition of local traffic.
12 We worked on the issue of the point of
13 interface and how that point of interface would
14 be designated and under what circumstances and
15 by which party. We worked on the issue of
16 compensation for trunks and facilities.
17 That is all I can recall off the
18 top of my head.
19 Q. Now, make sure I understand. You
20 were working after the arbitration hearing had
21 already been held; is that correct?
22 A. I believe the hearing had been held.
23 I know that the filing had been made, but I
24 believe the hearing had also been held.
25 Q. Do you know whether AT&T arbitrated

1 the definition of local traffic in North
2 Carolina?
3 A. I know that the issue of whether
4 ISP-bound traffic is subject to reciprocal
5 compensation was arbitrated. That may have been
6 teed up in the manner of what is the
7 appropriate definition of local traffic. I do
8 not know off the top of my head if that is the
9 case or not.
10 Q. Just so I understand, are you saying
11 you do or you do not know whether AT&T
12 arbitrated the definition of local traffic in
13 North Carolina?
14 A. I know that issues tangential to
15 that issue were arbitrated, and it may have been
16 phrased in that way. I do not believe that
17 the actual issue of how is local traffic going
18 to be defined outside of ISP-bound traffic was
19 arbitrated.
20 Q. So when you say you worked on the
21 definition of local traffic, it was related to
22 whether dial-up traffic to an ISP would be
23 considered local traffic; is that correct?
24 A. Well, we worked on two issues. That
25 was one issue, but further was just the scope

of what was going to be considered local traffic outside of the ISP-bound traffic issue.

Q. And again my question is, was that issue, which you said was about the scope of dial-up ISP traffic, was that arbitrated by AT&T in North Carolina?

A. I do not know.

Q. Did you also have peers at BellSouth who worked on interconnection issues with AT&T and North Carolina?

A. Michael Willis was the interconnection negotiator at the time. Again, Ed Honeycutt was involved. I was involved. I do not believe Tim Watts was involved at this stage. We may have brought in other SMEs to address specific issues. And myself. At one point Jo Cranford may have been involved assisting me, but I don't believe that there were any others. She was a subordinate of mine, not a peer.

Q. With respect to the negotiations that you were involved in in North Carolina, did you have authority to settle or resolve any undisputed or unresolved issues yourself without checking with supervision?

A. That depends on the scope of the

1 issue. Most generally I would check with upper
2 management, regardless of the scope. But
3 certain issues, yes, I did have authority to
4 resolve. Other issues I did not.
5 Q. What about the definition of local
6 traffic?
7 A. As it relates to ISP-bound traffic
8 was a larger issue and involved Jerry Hendrix.
9 As far as the scope of local traffic outside of
10 the issue of whether ISP-bound traffic was
11 subject to being local or not, I did have the
12 authority; although, I probably would have
13 conferred with others.
14 Q. With respect to the definition of
15 local traffic outside of the scope of dial-up
16 traffic to ISPs, did you resolve that issue with
17 AT&T?
18 A. I did negotiate that language and
19 agreed to that language on behalf of BellSouth.
20 Q. And who did you negotiate with from
21 AT&T on the other side?
22 A. Bill Peacock was the lead negotiator.
23 At times other players were involved. Roberta
24 Stephens, Sam Benenati. Counsel, obviously. Do
25 you want those names? And then also at times

1 Dave, was it Talbot, I think is his name.
2 Although that was earlier on, and he was not
3 involved later.
4 Q. I want to hand you a copy of your
5 December 18 testimony. We are going to talk
6 about some of the specific provisions from that.
7 I would like to have this marked as
8 AT&T deposition Exhibit 1.
9 (AT&T Exhibit-1 was marked for
10 identification.)
11 Q. (By Ms. Cecil) Let's turn to page
12 7 of that agreement, lines 20 through 24. You
13 make the statement: "Yes. In the agreement that
14 governs the parties' relationship in Mississippi,
15 BellSouth and AT&T agreed that all calls in the
16 LATA would be considered local." Do you see
17 that?
18 A. Yes.
19 Q. Now, based on your discussion earlier
20 this afternoon, you personally were not involved
21 in arriving at that definition of local traffic
22 for purposes of the Mississippi agreement, were
23 you?
24 A. Again, some language may have been
25 finalized at the end; but the concept and the

1 substantive parts of that definition of local
2 traffic were agreed to before I became involved.
3 Q. And you really don't have any
4 information as to why the parties agreed to that
5 particular definition of local traffic in the
6 Mississippi Agreement, do you?
7 A. Again, I was not personally involved,
8 so I don't have any firsthand knowledge on that
9 and really haven't discussed that with anybody
10 as to why we would have done that.
11 Q. And at line 23 there, you state,
12 again referring to the definition of local
13 traffic in the Mississippi Agreement: "It does
14 not have an exclusion for switched access
15 calls." Do you see that?
16 A. Yes.
17 Q. In line 24, you use the terminology
18 "switched access calls"; correct?
19 A. (Witness nodded head affirmatively).
20 Q. And the exclusion that you referred
21 to in your testimony in the North Carolina
22 Agreement doesn't refer to switched access calls,
23 does it?
24 A. It refers to switched access
25 arrangements -- excuse me, calls that are

1 originated or terminated through switched access
2 arrangements.
3 Q. So are you taking the position that,
4 under the terms of the Interconnection Agreement
5 in North Carolina, that the term switched access
6 calls and switched access arrangements are the
7 same?
8 A. No. I think the way I would phrase
9 that would be that calls that are originated or
10 terminated through switched access arrangements
11 are the same thing as switched access calls.
12 Q. Now, since you have indicated you
13 don't know why the parties agreed to that
14 particular definition of local traffic in
15 Mississippi, you also do not know why the
16 parties did not have, as you put it, an
17 exclusion for switched access calls, do you?
18 A. Again, I was not involved in that.
19 Q. Let's look at some sections of the
20 Mississippi Agreement in particular since you
21 refer to it in your testimony.
22 I am going to mark this as AT&T 2.
23 (AT&T Exhibit-2 was marked for
24 identification.)
25 Q. (By Ms. Cecil) Ms. Shiroishi, what

1 I have handed you are some excerpts from the
2 Mississippi Interconnection Agreement between AT&T
3 and BellSouth. I would like for you to turn
4 to page 20 of the exhibit. It is Attachment
5 3.
6 MR. SHORE: Is it the page
7 Attachment 3, or is it the twentieth page?
8 THE WITNESS: It is Attachment 3.
9 MS. CECIL: It is Attachment 3, page
10 20.
11 Q. (By Ms. Cecil) Do you see that?
12 A. Yes.
13 Q. The section starts out: "Section 6
14 Interconnection Compensation." And 6.1.1 states:
15 "Local Traffic means any telephone call that
16 originates and terminates in the same LATA." Do
17 you see that?
18 A. Yes.
19 Q. And that's the same definition for
20 local traffic in the Mississippi Agreement you
21 referred to in your testimony; is that not
22 correct?
23 A. Yes.
24 Q. Do you see in 6.1.2 it goes on to
25 indicate how the parties will compensate each

other for the transport and termination of local traffic? Do you see that?

A. Yes.

Q. And there are rates for that, are there not?

A. There are.

Q. Let's go down to Section 6.1.3. First sentence states: "The Parties have been unable to agree upon whether, pursuant to the FCC's February 26, 1999 Declaratory Ruling in Docket CC 96-98, dial up calls to Internet Service Providers or Information Service Providers should be considered Local Traffic for purposes of this Agreement." Do you see that?

A. Yes.

Q. And you are very familiar with that particular FCC order from 1999 regarding dial-up traffic to ISPs, are you not?

A. Yes.

Q. In fact, you filed testimony, as you indicated earlier, in the Florida generic proceeding regarding that particular FCC Declaratory Ruling; is that not correct?

A. Yes.

Q. And at the time you filed your

1 testimony in Florida in that generic proceeding,
2 what was BellSouth's position regarding the FCC's
3 February 26, 1996 Declaratory Ruling?
4 A. I am trying to remember the time
5 frame of that. I believe at that time the
6 Declaratory Ruling had been vacated. Is that
7 correct? BellSouth's position has also been
8 that dial-up calls to ISP are not local traffic.
9 I am not sure exactly what position aspect you
10 are looking for.
11 Q. And these dial-up calls, these are
12 calls from the controversy -- involved calls
13 from a BellSouth end user to an ISP customer
14 serviced by CLEC within the LATA; is that
15 correct?
16 A. Well, not necessarily -- the LATA
17 did not come into it as much as serviced by a
18 CLEC, yes.
19 Q. But from the CLEC's perspective, it
20 was considered to be a local call; is that not
21 correct?
22 A. Well, that was -- the issue is
23 whether it was a local call or not.
24 Q. And in your Florida testimony that
25 you filed in that proceeding, did you not

1 indicate that BellSouth took the position
2 jurisdictionally that that type of traffic was
3 more interstate than local?
4 A. Yes.
5 Q. I want to draw your attention to
6 that section of 6.1.3 where we were just looking
7 that states: "However, without prejudice to
8 either Party's position concerning the nature of
9 ISP-bound traffic, the Parties agree for purposes
10 of this Agreement only to compensate each other
11 at the same per minute use rate set forth in
12 Paragraph 6.1.2 for ISP-bound traffic." Do you
13 see that?
14 A. Yes.
15 Q. What did the parties agree to in
16 Mississippi relative to compensation for
17 ISP-bound dial-up traffic?
18 A. The parties agreed that local traffic
19 would be compensated at the rate set forth in
20 6.1.2 and, likewise, ISP-bound traffic would be
21 compensated at those same rates, again without
22 either party waiving their right on position as
23 to what the jurisdiction of that traffic was.
24 Q. At that point in time when you
25 entered into that agreement in Mississippi to

1 compensate ISP-bound traffic as local traffic,
2 that was inconsistent with BellSouth's
3 traditional company policy; is that not correct?
4 A. Well, let me go back a second. We
5 actually did not agree to compensate it as
6 local. We agreed to compensate it at the same
7 rates. That is a minor distinction, but an
8 important one for us.
9 At that point in time, BellSouth
10 took the position that -- or the position was
11 that ISP-bound traffic was not local and was
12 interstate in nature. However, as this states,
13 we agreed, without waiving that position, to
14 handle the agreement of ISP-bound traffic at the
15 intercarrier compensation rates set forth in
16 6.1.2.
17 Q. So in the Mississippi Agreement, you
18 agreed that local traffic would include all the
19 calls that originate and terminate in the same
20 LATA; is that correct?
21 A. Yes.
22 Q. And you also agreed that dial-up
23 calls to ISPs would be compensated at a local
24 compensation rate; is that not correct?
25 A. Or at the rate set forth in 6.1.2,

yes.

Q. This agreement did not go to arbitration, did it?

A. No, it did not.

Q. Why did BellSouth agree to compensate dial-up ISP traffic at the local compensation rates in Mississippi?

A. BellSouth agreed as part of a confidential settlement resolving both some back issues, or past issues, and to resolve the going forward issue of how ISP-bound traffic should be resolved to enter into this agreement with AT&T.

Q. What past issues were being resolved by that agreement?

THE WITNESS: I have a question. I don't know if --

MR. SHORE: We can go off the record and talk about it.

(Discussion ensued off the record.)

Q. (By Ms. Cecil) Ms. Shiroishi, before we went off the record, you were talking about settling past issues in Mississippi. What issues are you referring to?

A. It could have been -- again, I cannot recall exactly. But it could have been

1 that this was resolved going forward in this
2 manner in exchange for a resolution on a past
3 issue related to this same issue, or past
4 amounts and dates related to this same issue.
5 Or perhaps it was just agreed to resolve the
6 issue without going to arbitration.
7 Q. You don't know for sure, do you?
8 A. I don't recall, no.
9 Q. Now, the language that is in 6.1.3
10 regarding settlement of how ISP-bound traffic
11 would be compensated, it does not appear in the
12 North Carolina Agreement, does it?
13 A. I am sorry, ask me that again.
14 Q. The language in 6.1.3 about resolving
15 how dial-up traffic to ISPs would be
16 compensated, that is not in the North Carolina
17 Agreement, is it?
18 A. No, I do not believe it is.
19 Q. So that is clearly one difference
20 between the North Carolina Agreement and the
21 Mississippi Agreement; is that not correct?
22 A. Yes.
23 Q. So with respect to the Mississippi
24 Agreement, by virtue of this settlement of how
25 dial-up traffic to ISPs would be handled, there

1 was no issue about whether or not that traffic
2 would be considered local or not local within
3 the definition of local traffic in that
4 agreement, would you not agree?
5 MR. SHORE: I am going to object to
6 the form.
7 Q. (By Ms. Cecil) Do you want me to
8 repeat it?
9 A. Yes. I am sorry.
10 Q. Or do you want me to simplify it?
11 MR. SHORE: That would help me, but
12 the witness is being deposed.
13 Q. (By Ms. Cecil) With respect to the
14 settlement in the Mississippi Agreement, which
15 was dial-up traffic would be compensated at
16 local rates, dial-up ISP traffic would be
17 compensated at local rates, that issue no longer
18 impacted what was the definition of local
19 traffic in the Mississippi Agreement; isn't that
20 correct?
21 A. You mean in the North Carolina
22 Agreement?
23 Q. No. In the Mississippi Agreement.
24 A. Well, the issue was addressed in the
25 Mississippi Agreement as we see here. I am

not --

Q. So once you agreed that dial-up traffic to ISPs would be compensated at the local rate, there was no controversy as to whether or not it would be local traffic or not local traffic for purposes of the definition; isn't that correct?

A. Right. Again, the rates, the ISP-bound traffic would be compensated as intercarrier compensation at the rate set forth in 6.1.2.

Q. I want to ask you, following up on some comments you made in your testimony in Florida, is it not true in the Florida generic proceeding in which you testified about dial-up calls to ISP that BellSouth took the position that such traffic was interstate access service and was predominantly interstate in nature?

A. That is correct.

Q. You did not want the Florida Commission to rule that dial-up ISP traffic was subject to local reciprocal compensation rates; is that correct?

A. Correct.

Q. And the nature of the calls that

1 were at issue in Florida, these dial-up calls to
2 ISPs, the calls were from a BellSouth end user
3 customer to an ISP where the ISP had obtained
4 local service from a competing provider; is that
5 not correct?
6 A. Correct.
7 Q. And even though --
8 MR. SHORE: Now, I am sorry. I
9 need to object to your characterization of the
10 calls. I want to make an ongoing objection if
11 you keep doing it, but to the extent there is
12 a legal conclusion from it, it might be a moot
13 point.
14 You can answer that -- you already
15 did.
16 Q. (By Ms. Cecil) So even though these
17 calls from the BellSouth end user to the ISP
18 might have looked like local calls, were within
19 the LATA, you were arguing that, no, they may
20 look like local calls but they are not local
21 calls and, therefore, they shouldn't be treated
22 as local calls for compensation purposes; is
23 that fair?
24 A. I guess that is a, yes, simplistic
25 version of it. Yes.

1 Q. And unlike the position that you
2 took in the Florida generic proceeding, AT&T and
3 BellSouth agreed in Mississippi that dial-up
4 calls to ISPs within a LATA were to be
5 terminated at local compensation rates; is that
6 not correct?
7 A. The parties agreed that the
8 intercarrier compensation rates for ISP-bound
9 traffic would be those set forth in 6.1.2, yes.
10 Q. And those would include calls to
11 dial-up ISPs within the LATA; right?
12 A. I believe it defines those calls
13 would be calls to an ISP by dialing a local
14 dialing pattern.
15 Q. Well, what about calls within the
16 LATA to an ISP that were not dialed in such
17 fashion?
18 A. I would have to go back through the
19 agreement. I am just reading from Section 6.1.3
20 on that.
21 Q. Well, let's look at Section 6.1.3,
22 page 21. Look at the fourth line down. That
23 is where I was reading from. "Dial-up calls are
24 defined as calls to an ISP that are dialed by
25 using a local dialing pattern, (7 or 10 digits)

1 by the calling party, (hereinafter referred to
2 as"ISP-bound traffic")."
3 What is ten-digit dialing; what kind
4 of call does that denote?
5 A. Typically ten-digit dialing is a
6 local call that is dialed in an area where you
7 pretty much use an area code.
8 Q. Within the LATA?
9 A. Yes.
10 Q. Let's move again to the North
11 Carolina negotiations. Did you state earlier
12 that you did not know when those negotiations
13 began?
14 A. Correct.
15 Q. And you stated, I believe, that you
16 got involved after the parties had their
17 arbitration hearing; is that correct?
18 A. Again, I am not sure if the hearing
19 had been held, but it was after the arbitration
20 was filed.
21 Q. You didn't file any testimony in
22 that arbitration, then, did you?
23 A. No.
24 Q. Are you familiar with the FCC's
25 April 27, 2001 order on dial-up calls to ISPs?

A. Yes.

Q. What did the FCC decide in that proceeding?

A. The FCC decided that calls to ISPs were information access; however, they set forth a compensation scheme under Section 2.0.1. to handle those in the interim -- or in an interim basis until further ruling.

Q. And what was the interim basis?

A. You want the rates or --

Q. No, just the concept.

A. The concept was if you had been compensated for ISP-bound traffic in the past you would continue to be compensated at rates set forth in the order and under a growth cap type scheme proscribed by the order. If you had not been compensated for ISP-bound traffic in the past or if you were a new carrier, then you would not be able to avail yourself of the rates.

Q. When you say compensated, you mean compensated at the local interconnection rates?

A. I don't know if it set that forth or not. I don't recall if it specified what the compensation had to be at. It also --

1 Q. And again -- I am sorry?
2 A. I was going to say it also offered,
3 I guess, a trigger type plan where carriers,
4 ILECs, could avail themselves or not avail
5 themselves under certain circumstances.
6 Q. And again, that FCC decision was
7 April 27, 2001; is that not correct?
8 A. I believe that is.
9 Q. Was that a follow-on or subsequent
10 decision to the February 28, 1999 FCC
11 Declaratory Ruling that is referred to in the
12 Mississippi Interconnection Agreement in Section
13 6.1.3?
14 A. February 26, yes. I am not sure
15 procedurally how they were linked, but --
16 MR. SHORE: We will stipulate it was
17 subsequent.
18 THE WITNESS: It was subsequent.
19 And it was, I guess, in response to the vocator
20 of that order.
21 Q. (By Ms. Cecil) You would agree with
22 me that the North Carolina Second Interconnection
23 Agreement, which is not an issue in this
24 agreement, was executed after the April 27, 2001
25 decision, was it not?

1 A. Yes.
2 Q. So that is another difference between
3 the Mississippi Agreement and the North Carolina
4 Agreement. The Mississippi Agreement, at the
5 time it was agreed to the FCC's April 27, 2001
6 order, was not yet out; is that not correct?
7 A. Correct. Well, yes, that is
8 correct.
9 Q. Let's look at some of the North
10 Carolina --
11 A. Well, I am saying that. I don't
12 actually know the date the Mississippi Agreement
13 was signed. I am almost positive, but.
14 MR. PEACOCK: May 28, 2001.
15 THE WITNESS: Yes.
16 Q. (By Ms. Cecil) We are going to
17 look at the North Carolina Agreement as well as
18 continue with some of your testimony.
19 (AT&T Exhibit-3 was marked for
20 identification.)
21 Q. (By Ms. Cecil) Before we go to the
22 current Interconnection Agreement which is in
23 dispute in this proceeding, I want to ask you a
24 question about the prior Interconnection
25 Agreement, what AT&T has referred to as First

1 Interconnection Agreement in its complaint.
2 I have handed you what has been
3 marked as Exhibit 3 to this deposition, which is
4 excerpts from the prior or First Interconnection
5 Agreement between AT&T and BellSouth and North
6 Carolina dated April 28, 1997. I would ask you
7 to turn to the last page of that Exhibit 3.
8 Do you see in the middle of the
9 page there the term local traffic?
10 A. Yes.
11 Q. Could you read that into the record,
12 please?
13 A. "Local traffic - means any telephone
14 call that originates and terminates in the same
15 LATA and is billed by the originating Party as
16 a local call, including any call terminating in
17 an exchange outside of BellSouth's service area
18 with respect to which BellSouth has a local
19 interconnection agreement with an independent
20 LEC, with which AT&T is not directly
21 interconnected."
22 Q. Let's go to your testimony. I would
23 like to go to page 2, line 8. You state
24 there, actually up on line 7: "In addition, I
25 explain that it was BellSouth's intent at the

1 time it entered into the agreement that calls
2 that originated or terminated via switched access
3 arrangements would not be included within the
4 definition of "Local Traffic"." Do you see that?
5 A. Yes.
6 Q. Now, if you were involved in the
7 negotiations after the arbitration had been held
8 and after testimony had been held, how did you
9 communicate to AT&T that it was BellSouth's
10 intent that calls originated or terminated via
11 switched access arrangements would not be
12 included in the definition of local traffic?
13 A. After the arbitration was filed, the
14 parties continued negotiating provisions of the
15 Interconnection Agreement.
16 At that point is when the
17 substantive negotiations around the definition of
18 local traffic, again outside the scope of
19 dial-up ISP -- can we kind of stipulate that is
20 what we are talking about here, outside the
21 scope of ISP? -- that the parties entered into
22 fairly extensive negotiations about how local
23 traffic would be defined, again outside the
24 scope of ISP.
25 During those discussions, we went

1 back and forth with different language. And
2 that is when the parties had discussions around
3 the switched access arrangements and how it
4 would be handled. The definitions that either
5 party filed in arbitration are not what was put
6 into the final signed agreement.
7 Q. So is it your testimony that AT&T
8 entered into negotiations with you about the
9 definition of local traffic, outside of dial-up
10 traffic to ISPs, after the arbitration hearing
11 was held?
12 A. Again, I am not sure when the
13 hearing was held. If we have that date, I can
14 tell you what the scope of this was. And I
15 wouldn't say entered. I would say we continued
16 negotiating, fairly substantially.
17 The parties exchanged multiple red
18 lines in the late May, June, July 2001 time
19 frame.
20 Q. If this was an issue, why would AT&T
21 have not have included it in its arbitration
22 petition?
23 MR. SHORE: Object to the extent it
24 asks her to characterize what AT&T did or why
25 they did it.

1 THE WITNESS: I can't speak for what
2 AT&T did. I can tell you that the parties
3 continued negotiating on multiple issues, which I
4 gave a list of earlier, after the parties had
5 filed for arbitration.
6 Q. (By Ms. Cecil) Well, to the best
7 of your knowledge, did BellSouth file anything
8 when it responded to AT&T's arbitration petition
9 that the definition of local traffic, other than
10 ISP traffic, was in dispute?
11 A. I don't know that either party -- I
12 was not involved at that time. I don't know.
13 I am sure the filing would state if we did,
14 but I don't know.
15 Q. Well, wouldn't it be unusual for
16 AT&T, in an arbitration, if it had an issue of
17 the magnitude of the definition of local traffic
18 not to include it in its arbitration petition?
19 MR. SHORE: Objection.
20 THE WITNESS: Again, I can't speak
21 to AT&T's intent. The definition that was filed
22 in AT&T's arbitration filing is not what was
23 agreed to by the parties. Likewise, the
24 definition that was filed in BellSouth's North
25 Carolina arbitration as the base document is not

1 what the parties ended up entering into.
2 We continued negotiating after the
3 filing of that arbitration and negotiated fairly
4 substantive changes around several issues.
5 Q. (By Ms. Cecil) Regarding this
6 language in your testimony, lines 7 through 10,
7 where you talk about expressing where it was
8 BellSouth's intent, how did BellSouth express
9 this intent to AT&T that calls originated or
10 terminated via switched access arrangements would
11 not be included in the definition of local
12 traffic?
13 A. Well, first and foremost, by the
14 language itself. The language says that, just
15 reading from it: "The Parties agree to apply a
16 "LATAwide" local concept to this Attachment 3,
17 meaning that traffic that has traditionally been
18 treated as intraLATA toll traffic will now be
19 treated as local for intercarrier compensation
20 purposes, except for those calls that are
21 originated or terminated through switched access
22 arrangements as established by the State
23 Commission or FCC."
24 So the exclusion is included in the
25 language, and there were discussions around that

1 exclusion.

2 Q. Who was present during these

3 discussions about that exclusion from AT&T?

4 A. From AT&T, Bill Peacock, Michael

5 Karno. I do not recall if Roxanne Douglas was

6 present or not. Again, most of the SMEs we

7 included, Roberta, Sam; and I am not sure if

8 they were involved specifically or not. And I

9 do not think Dave Talbot was involved; but

10 again, he was involved in some discussions.

11 Q. Who was doing the talking for

12 BellSouth during these discussions?

13 A. Mostly myself.

14 Q. What did you tell Mr. Peacock and

15 Michael Karno and others from AT&T?

16 A. We discussed what the exclusion meant

17 and the fact that anything that originated or

18 terminated through a switched access arrangement

19 would not be counted as local.

20 Q. Okay. Was there discussion about

21 what the definition of switched access

22 arrangements was?

23 A. I do not recall specifically around

24 that issue. There was discussion around what

25 "as established by the earlier language to read

1 the ruling regulatory body meant," that language
2 was modified to read "as established by the
3 State Commission or FCC." So that was -- so
4 the discussion around that was the fact that the
5 FCC or State Commission has jurisdiction over
6 our tariffs, which is how we offer the switched
7 access arrangements. So that discussion was
8 held.
9 Q. Why do you say in that paragraph,
10 then, switched access arrangements means
11 BellSouth tariffs?
12 A. Well, it actually could be either
13 party's tariffs. Because if BellSouth were
14 participating from AT&T, it could be their
15 tariffs. That is one alternative of language
16 that will achieve the same purpose. The parties
17 agreed upon this language.
18 Q. Are you saying you actually discussed
19 with AT&T that the language as established by
20 State Commission or FCC related to BellSouth
21 switched access tariffs?
22 A. Either party's switched access
23 tariffs. We made a change to that language, and
24 in those discussions we discussed that.
25 Q. My point is did you tell Bill

1 Peacock or Michael Karno or anyone else from
2 AT&T that we, BellSouth, believe this language
3 as established by the State Commission or FCC
4 means BellSouth switched access tariffs?
5 A. You would have to combine it with
6 switched access arrangements as established by
7 the State Commission or FCC. We discussed that
8 would be an arrangement offered through the sale
9 of the tariffs or over which the State
10 Commission or FCC have authority.
11 Q. When did those discussions take
12 place?
13 A. There were discussions on June 6 of
14 2001 at BellSouth Center. I believe that the
15 meeting was face-to-face. We actually,
16 BellSouth, offered our original definition to
17 AT&T sometime in the May 22nd time frame. And
18 the next meeting we had, there was discussion.
19 The more substantive, probably,
20 discussion was held later on a conference call
21 in July. And I don't recall the exact date
22 off the top of my head. But we were
23 finalizing the North Carolina Agreement. And
24 that is when that language change was actually
25 made from "ruling regulatory body" to "State

1 Commission or FCC."
2 Q. Was it during those conversations you
3 just mentioned that you also discussed what
4 switched access arrangements meant or were you
5 focusing more on the language "the State
6 Commission or FCC"?
7 A. No. They were discussed together.
8 Q. How do you know those discussions
9 took place on June 6, 2001 and then sometime in
10 July of 2001?
11 A. June 6, 2001, we had a meeting.
12 And again, that was right after BellSouth
13 offered the definition. And I recall discussing
14 it, in fact, because we had just offered up the
15 definition. At that point AT&T had not decided
16 to accept it or not. It was just basically
17 more of a discussion around what the definition
18 would do.
19 On the July conference call, we
20 exchanged red lines after that conference call
21 that said attached is a red line as a result
22 of last night's conference call, and those
23 changes are reflected therein.
24 Q. Other than the red lined version of
25 the agreements you just referred to, do you have

1 any other meeting notes or any other writings
2 which would confirm what you discussed and when
3 you discussed it?
4 A. I have not gone through every
5 document yet. I am still looking through those
6 documents to see.
7 Q. The ones you have been through, did
8 you find anything other than the red lined
9 versions of the agreement you just referred to?
10 A. There are some handwritten notes, but
11 I don't recall off the top of my head if those
12 have anything to do with this or not. I do
13 recall the red lines in the e-mails, but I do
14 not recall any meeting minutes specific to that
15 issue at this point.
16 Q. So you have red lines plus you have
17 e-mails; is that correct?
18 A. Yes.
19 Q. And who are the e-mails to?
20 A. The e-mail after the July conference
21 call is to Bill Peacock.
22 Q. What does that e-mail say?
23 A. It says attached are the red lines
24 reflecting -- I am paraphrasing, I can't
25 remember exactly -- reflecting the conference

1 call last night and the accepted language
2 changes made therein, or something to that
3 effect.
4 Q. My question is do you have an e-mail
5 or any other kind of writing that says: Here
6 is what I told Mr. Bill Peacock, or anybody
7 else at AT&T, about what this language means
8 except for those calls originated or terminated
9 through switched access arrangements as
10 established by the State Commission or FCC?
11 A. As of the date of the real time
12 communications, not that I have found, but I
13 haven't finished looking through.
14 Q. What about other dates?
15 A. There are subsequent e-mails that
16 went back and forth between our companies
17 putting forth each party's position.
18 Q. What e-mails are those?
19 A. There is an e-mail from Lea Cooper
20 to Michael Karno and I believe one from Michael
21 Karno to Lea Cooper.
22 Q. What do those say?
23 A. I can't recall off the top of my
24 head, but basically after the parties realized
25 we had a disagreement on this issue -- there

are two time frames here. To date we were talking about the negotiations and what transpired. After the parties realized there were disputes over the issue, those are the e-mails I am referring to where it says BellSouth's understanding or position is and lays it out. And, likewise, Michael transferred back AT&T --

Q. Were those e-mails between you and Karno after the agreement had been signed or before?

A. Yes, after.

Q. Let's go to page 3, line 1. You are talking, you make the statement here: "The exclusion is specifically targeted at intraLATA traffic." Do you see that?

A. Uh-huh (affirmative).

Q. What led you to that conclusion?

A. The definition itself is addressing intraLATA type traffic. If you read above, it says "meaning that traffic that has traditionally been treated as intraLATA toll traffic will now be treated as local," I am skipping over, "except for those calls."

So the definition itself is bounding

1 and discussing only intraLATA traffic.
2 Q. Let's go down to line 13 on that
3 same page where you say: "Such a call would be
4 governed by BellSouth's switched access tariffs
5 and would be subject to the appropriate switched
6 access rates."
7 That line in your testimony, that is
8 your conclusion; that language is not found in
9 the North Carolina Interconnection Agreement
10 anywhere, is it?
11 A. Correct.
12 Q. We talked about earlier that there
13 is no definition or we believe, AT&T believes
14 there is no definition of switched access
15 arrangements in the North Carolina
16 Interconnection Agreement. Do you remember that
17 discussion?
18 A. Yes.
19 Q. Do you know if there is any
20 definition in the North Carolina Interconnection
21 Agreement that defines switched access
22 arrangements as established by State Commission
23 or the FCC?
24 A. A definition?
25 Q. Yes.

1 A. No, there is not, to my knowledge.
2 Q. Let's go over to page 4, lines 3
3 and 5. You're asked the question at line 1:
4 "Was Mr. King a part of the negotiations?"
5 And your answer was: "No. He was
6 not involved in any of the negotiations
7 regarding this contract language. His
8 involvement began after the contract was signed
9 and the dispute arose regarding this language."
10 Are you saying Mr. King did not
11 attend any negotiation sessions with BellSouth
12 for the North Carolina Agreement?
13 A. No. I did not attend any -- or I
14 was not involved in negotiating any provisions
15 with Mr. King before the North Carolina contract
16 was signed.
17 Q. So that testimony should be modified,
18 should it not, to state he was not involved in
19 any of the negotiations regarding this
20 interconnection language to which I was involved?
21 MR. SHORE: Object to the form.
22 THE WITNESS: Well, I was involved
23 in all of the substantive negotiations around
24 this language -- around this issue.
25 Q. (By Ms. Cecil) Let me make sure I

1 understand. I thought you said earlier that you
2 were involved after the arbitration had been
3 held?
4 A. Right. The language at dispute in
5 this case was not negotiated until after the
6 arbitration was held.
7 Q. Okay. Let's go to page 4 and let's
8 go to lines 10 through 11. You state there:
9 "AT&T and BellSouth started the negotiations of
10 Second Interconnection Agreement using a
11 definition of local traffic that was similar to
12 the definition in the First Interconnection
13 Agreement."
14 What definition was that?
15 A. I don't have it with me, obviously;
16 and I probably am not going to paraphrase
17 exactly correct. But in the petition -- it is
18 contained in the petition or the version that
19 BellSouth filed for arbitration in North Carolina
20 and basically states that local traffic means
21 any telephone call that originates and terminates
22 in the same LATA and billed as a local call.
23 I don't remember if it is the same words, but
24 it is the same concept.
25 Q. And you don't know that from any

1 personal knowledge because you were not involved
2 in the negotiations when they first started;
3 right?
4 A. Again, that is -- no, not from
5 personal knowledge, but that is what BellSouth
6 filed in the arbitration.
7 Q. Well, how do you know, then, that
8 when the negotiations started that BellSouth
9 offered AT&T a definition that it did use with
10 other carriers?
11 A. That is not at the start. That is
12 during the course of the negotiations.
13 Q. Okay. When during the course of
14 negotiations did BellSouth offer AT&T a
15 definition that they had used with any other
16 carriers?
17 A. Around the May 22, 2001 time frame.
18 Q. That was after you had become
19 involved in the negotiation also?
20 A. Yes.
21 Q. What definition was that?
22 A. That was the definition discussed on
23 page 5, which is local traffic is any telephone
24 call that originates or terminates in the LATA
25 "except for those calls that are originated or

1 terminated through switched access arrangements
2 as established by the ruling regulatory body."
3 Q. And you say that "This new
4 definition expanded what was considered local
5 within the LATA, but still excluded minutes that
6 traversed switched access arrangements that the
7 carrier had purchased from BellSouth."
8 Do you see that, where you make that
9 statement on page 4 at lines 13?
10 A. Yes.
11 Q. How did that new definition expand?
12 What was considered local within the LATA?
13 A. Well, under the First Interconnection
14 Agreement, in order to be considered local the
15 call had to be billed by the originating party
16 as a local call. Before under this definition
17 offered in the May time frame, the billing was
18 not an issue. It was around more of the
19 routing of the traffic. So things that, for
20 instance, AT&T may not have billed as local
21 could still potentially be considered local under
22 this definition.
23 Q. Under the First Interconnection
24 Agreement, do you know whether BellSouth charged
25 AT&T for -- or terminated traffic for AT&T at

1 local rates which AT&T had not billed as local?
2 A. I don't know any historical data on
3 the billing. The local traffic definition would
4 state that any telephone call that originates or
5 terminates in the same LATA and is billed by
6 the originating party should be compensated for
7 reciprocal purposes as local.
8 Q. But you indicated you don't know
9 what actually happened between the parties?
10 A. No. I would hope that that is the
11 definition that was used to calculate the
12 billing.
13 Q. Now, would you be surprised if, in
14 fact, AT&T had sent traffic which BellSouth
15 terminated at local rates which AT&T had not
16 billed at local rates under the First
17 Interconnection Agreement?
18 A. Again, I don't know that. I am not
19 sure how to answer that. That would be, I
20 guess, a violation of the Interconnection
21 Agreement.
22 Q. So is it your testimony, then, that
23 AT&T benefited from this new definition because
24 it no longer had to bill certain traffic as
25 local and it would qualify as local traffic?

1 A. I am not going to make an opinion
2 about whether it benefited or not. It was a
3 definition that we offered to AT&T.
4 Q. Well, you say right here in line 13:
5 "This new definition expanded what was considered
6 local within the LATA." What did you mean by
7 expanded?
8 A. Whether that is a benefit or not is
9 more of an opinion question. On the other
10 side, there would be less access that they would
11 receive from BellSouth. So, again, whether it
12 is a benefit or not would be up to that CLEC
13 to decide.
14 Q. Let's go down to lines 19 to 22 on
15 that same page. You say: "AT&T responded that
16 it wanted to avail itself of this new LATA wide
17 local traffic definition with the exclusion for
18 traffic that originated or terminated through
19 switched access arrangements, but proposed a
20 slight language change."
21 What language change was proposed by
22 AT&T?
23 A. The change from ruling regulatory
24 body to State Commission or FCC.
25 Q. When did this occur?

A. It occurred in the discussions in the July conference call.

Q. Why did AT&T indicate that it wanted to make this change in the language?

A. The only reason that I remember being discussed is just that they felt it was -- if we were referring to the Commission or FCC, why not state that.

Q. That is all they said?

A. That is all I recall about that.

Q. Do you have any meeting notes that reflect this conversation that you had with AT&T as to why they wanted to make this change?

A. Again, I haven't finished going through everything for the discovery, but I have not found any yet, no.

Q. Let's go over to page 5, lines 5 through 7. The terminology, "ruling regulatory body," that you refer to, do you have that in interconnection agreements with other competing providers?

A. Yes.

Q. Where you have that language with other providers in other interconnection agreements, how is traffic, dial-up traffic to

1 ISPs treated for compensation purposes?
2 A. I couldn't tell you that off the top
3 of my head. Each agreement has a provision
4 that deals with that and could be individual and
5 specific. I don't know that there is any
6 pattern with that or related to that phrase.
7 Q. So when you were talking here about
8 ruling regulatory body and other parts of your
9 testimony where you provided this to other
10 CLECs, that was just relative to the definition
11 of local traffic; it didn't necessarily have
12 anything to do with compensation for dial-up ISP
13 traffic?
14 A. No.
15 Q. All right. Let's go to lines 10
16 through 14 where you say: "In the course of
17 these discussions, the Parties discussed the fact
18 that this reference was to the switched access
19 arrangements that are offered for purchase
20 through each Party's switched access tariffs,
21 which are approved by the State Commission (for
22 intrastate switched access) or the FCC (for
23 interstate switched access)."
24 What discussions are you referring to
25 there?

1 A. Again, most specifically the June
2 6th, 2001, I believe it was, face-to-face
3 meeting and the July conference call.
4 Q. Let's go down to lines 23 through
5 25. You make the reference there: "In the
6 course of those discussions, we drew diagrams on
7 the whiteboard and specifically discussed the
8 calls that traversed switched access arrangements
9 and the fact that they would be expressly
10 excluded from the definition of Local Traffic."
11 Now, when did these discussions take
12 place?
13 A. That was in the June 6th meeting
14 when we were discussing that. Again, at that
15 time AT&T had not availed itself of the
16 definition. BellSouth had just offered it, and
17 we were just having discussions about what it
18 meant.
19 Q. What were the diagrams that were put
20 on the whiteboard?
21 A. Basically, we were just showing how
22 the traffic routing would affect it and the fact
23 that whenever a local, it would be considered
24 local, whenever it switched access, it would not
25 be local.

1 Q. What if it went over a trunk where
2 there was combined access?
3 A. It would depend on the trunk group
4 type. But I don't know that we talked about
5 that, but that would be the answer.
6 Q. You don't know whether you talked
7 about a trunk where you might have combined
8 local, intraLATA and interstate calls over that
9 same trunk?
10 A. No, I don't recall any, that
11 specific question being asked.
12 Q. So was the discussion on the
13 whiteboard where you would have a dedicated
14 trunk that would only cover local traffic and
15 other dedicated trunks that would cover non-local
16 traffic?
17 A. Again, going back to the trunk type,
18 was it a switched access trunk group or a local
19 toll trunk group?
20 Q. Well, I want to ask you a follow-up
21 question about trunk groups, now that you
22 mentioned that.
23 We talked earlier about the access
24 server request and that all trunk groups are
25 ordered through the access server request. What

is there on the access server's request which differentiates whether it is going to be a switched access arrangement versus a local arrangement or local interconnection arrangement?

A. There are trunk type indicators that are actually populated by the ordering party, I believe, as to what type of trunk group that it is.

Q. When you had the discussion and you were drawing diagrams on the whiteboard, at that point in time were the parties also discussing network architecture at the point of interconnection?

A. I don't recall if point of interconnection was being discussed or not. I do believe we were discussing trunks and facilities compensation, and it is very possible we were discussing other network architecture type things.

Q. Do you have any of these diagrams or copies of these diagrams that you referred to in your testimony on page 5?

A. No.

Q. Do you know if anyone at BellSouth ever kept copies of these diagrams?

A. We are still looking into everyone's files about that.

Q. So I want to make sure. Do you know if the parties ever did any diagramming relative to point of interconnection or network architecture?

A. Yes. Yes, we did.

Q. So you are saying you did diagrams on both?

A. Yes. We had diagrams on many issues.

Q. And the day that you were doing diagrams relative to what would traverse a switched access arrangement, are those the only diagrams that were discussed and put on the whiteboard by the parties?

A. I don't know.

Q. Let's go over to page 6 where you talk about you have agreements with other CLPs that contain the LATA wide definition down at the bottom of page 9.

Now, when you filed this testimony, were you saying that they have got the same definition of LATA wide, the same LATA wide definition of local traffic?

A. I am not sure I understand your question.

Q. Let me strike that and rephrase it.

When you filed this testimony that said you have "interconnection agreements with CLPs that contain the LATA wide definition of local traffic," were you referring only to the definition of local traffic as being the same?

A. I still am not sure I understand. As opposed to what?

Q. As opposed to a definition of local traffic and provisions which cover how ISP-bound traffic should be compensated?

A. Right. No, I was -- BellSouth does not define, within our definition of local traffic, ISP-bound traffic. There may be a subsection that says it either isn't local or here is how we handle ISP-bound traffic. But for the definition of local traffic, I was referring to the definition outside the scope of dial-up ISP.

Q. Just so the North Carolina Commission understands what you are referring to here, you are saying we have an AT&T/BellSouth agreement with a LATA wide definition of local traffic,

1 and we have some CLEC, other CLP or CLEC
2 agreements that have the same definition?
3 A. Right.
4 Q. But you are not saying to the North
5 Carolina Commission that all of the terms that
6 are in the North Carolina Interconnection
7 Agreement between AT&T and BellSouth are of the
8 same terms, all of the same terms on an
9 interconnection agreement with BellSouth and
10 other CLPs; is that correct?
11 A. No. The only time that would be is
12 when someone adopted a BellSouth agreement.
13 Q. Is it the case that the North
14 Carolina Commission should look to the
15 AT&T/BellSouth Agreement in its entirety and
16 compare to it a CLEC agreement in its entirety
17 to come to the conclusion of whether or not the
18 agreements are similar or the same?
19 MR. SHORE: I object to the extent
20 she asked you for some legal conclusion on what
21 the Commission ought to do to decide the
22 ultimate issue in this case. If you have some
23 lay opinion about that, I suppose you can
24 answer.
25 THE WITNESS: That is if I have an

1 opinion.
2 No. I think the point or the
3 disagreement revolving around this issue is there
4 is value in evaluating whether that same
5 definition is found in other agreements and how
6 the parties have handled that.
7 Q. (By Ms. Cecil) Well, with respect
8 to the interrelated language that is referred to
9 in a subsequent section, do the CLP agreements
10 that you have that you mention in your
11 testimony, do they also have that interrelated
12 language in it?
13 A. I don't know off the top of my head
14 whether any of those have it or not. I don't
15 know.
16 Q. And you have just indicated that not
17 necessarily any of those would also have the
18 language that deals with how dial-up ISP traffic
19 is to be accomplished; is that not correct?
20 A. Right. It may or may not differ.
21 Q. All you are saying here is we have
22 some other agreements out there that have the
23 same definition of LATA wide traffic for local
24 traffic; isn't that correct?
25 A. Correct.

Q. You are not trying to tell the Commission that there is anything else magical about these CLECs/CLP agreements related to the agreement, are you?

A. No. Just the fact that the definition is the same as the subsequent question follows, and that no other CLP has taken this position.

Q. Let's move over to pages 8 and 9, specifically page 9. You make the statement at line 8 that "The reference to the interrelationship was added as the Parties were negotiating mutually agreeable language to deal with Voice over Internet Protocol." Do you see that?

A. Yes.

Q. And that statement relates to Section 5.3.3 and in particular the last line in 5.3.5; is that not correct?

A. 5.3.3?

Q. Yes.

A. Yes.

Q. When you say the interrelationship in line 8, you are referring to the last sentence of 5.3.3 that states: "This Section is

1 interrelated to Section 5.3.1." Do you see
2 that?
3 A. Yes.
4 Q. Now, as I read your testimony, what
5 you are saying to the Commission is, this last
6 sentence, and again, it is in quotes, "This
7 section is interrelated to Section 5.1.1," does
8 not relate to the entirety of Section 5.3.3, but
9 it only relates to the last two lines of the
10 section that deals with Voice over Internet
11 Protocol traffic; is that correct?
12 A. Well, no. What I have stated there
13 is that the reference was added as the parties
14 were negotiating mutually related language for
15 Voice over Internet Protocol.
16 Q. What is the conclusion you want the
17 Commission to draw from that testimony at lines
18 8 and 9?
19 A. As the parties were trying to reach
20 resolution on this issue, which I believe was an
21 arbitrated issue --
22 Q. This issue meaning Voice over
23 Internet?
24 A. Voice over Internet Protocol.
25 -- there actually was not a switched

1 access definition in the Interconnection
2 Agreement until the parties started negotiating
3 about Voice over Internet Protocol. At that
4 point is when the switched access definition was
5 inserted, not as it reads today, but at that
6 point in time, and was negotiated in connection
7 with the Voice over Internet Protocol and how
8 the parties would handle that. And the language
9 did change over time with red lines and
10 counterproposals from each party.
11 Q. When did the Voice over Internet
12 Protocol take place?
13 A. Well, there were, I guess, different
14 phases of the negotiations. We negotiated this
15 issue fully. And, I believe, we filed
16 arbitration on this.
17 Does anybody know to confirm that?
18 MR. SHORE: Don't use that to
19 testify.
20 THE WITNESS: I believe the parties
21 did file arbitration on this issue. Again, the
22 parties continued negotiations on several issues,
23 this being one of them. And this language was
24 inserted in the June-July time frame.
25 Q. (By Ms. Cecil) And from BellSouth's

position, why was it inserted?

A. What language, Voice over Internet Protocol?

Q. No. "This section is interrelated to Section 5.3.1."

A. Because if you read there it talks about any Voice over Internet Protocol that originates and terminates in a different LATA shall not be compensated as local. This is related to 5.3.1.

If the parties had agreed to a local traditional calling area type definition of local traffic, then that sentence would need to read that any VOIP transaction that originates in one VOIP area and terminates in another and references back to the definition of local traffic.

MS. CECIL: Mark this as Exhibit 4.

(AT&T Exhibit-4 was marked for identification.)

Q. (By Ms. Cecil) Ms. Shiroishi, if you would point me to the reference you just made regarding VOIP in 5.3.1?

A. 5.3.3?

Q. I thought you said this section is

1 interrelated to Section 5.3.1, related to VOIP
2 language in 5.3.1. That is what I thought you
3 said.
4 A. Right. In Section 5.3.3, the last
5 sentence -- I am sorry, second to the last
6 sentence: "Notwithstanding the foregoing, and
7 without waiving any rights with respect to
8 either Party's position as to the jurisdictional
9 nature of VOIP..."
10 That sentence continues on: "...
11 provided, however, that any VOIP transmission
12 which originates in one LATA and terminates in
13 another LATA shall not be compensated as Local
14 Traffic. This Section is interrelated to Section
15 5.3.1."
16 If the parties had not gone to a
17 LATA type definition, that would need to read,
18 provided, however, that any VOIP transmission
19 which originates in one local calling area, or
20 corresponding to whatever the parties agreed to.
21 Q. But my point is, it says: "This
22 section is interrelated to Section 5.3.1." Is
23 there anything in Section 5.3.1 that addresses
24 Voice over Internet Protocol traffic only?
25 A. No. What that last sentence is

1 talking about is that, to paraphrase, VOIP
2 transmission is going to be eligible for a
3 CIP-COM where it is interLATA. So that had to
4 be related back or interrelated back to the
5 definition of local traffic. Because if the
6 definition of local traffic had been your
7 traditional local calling area, then that would
8 have needed to be local calling area.
9 Q. Well, why does it say this section
10 is "interrelated" as opposed to, the last two
11 sentences of this paragraph, are "related" to
12 5.3.1?
13 A. I don't know. Perhaps it could have
14 been more specific in the last section. But
15 again, the entire switched access definition was
16 put in to deal with -- or at the time the
17 parties were negotiating VOIP provisions.
18 Q. Who wanted that to be added in?
19 A. I don't have calls that -- I don't
20 have notes on that. But that is potentially
21 something that BellSouth may have wanted.
22 Again, for adoption purposes, if someone wanted
23 to adopt that section to make sure they had to
24 take the interrelated terms and conditions.
25 Q. Let move over to page 9 of your

1 testimony. I want to talk about your testimony
2 in answer to: "Does other language in Attachment
3 3 address the migration to this new definition
4 of local traffic?"
5 When you say at line 16, "Further,
6 the definition," did you mean the definition of
7 local traffic?
8 A. Yes.
9 Q. Where is it, anywhere in the North
10 Carolina Interconnection Agreement, that it
11 states that the definition of local traffic is
12 related to the type of arrangement or trunk
13 group that the traffic originated or terminated
14 through?
15 A. In the Section 5.3.1, which talks
16 about -- I am sorry. 5.3.1 where it talks
17 about: "The Parties agree to apply a "LATAwide"
18 local concept to this Attachment 3, meaning that
19 traffic which has traditionally been treated as
20 intraLATA toll traffic will now be treated as
21 local for intercarrier compensation purposes,
22 except for those calls that are originated or
23 terminated through switched access
24 arrangements..."
25 Q. So that is the exclusion language,

1 you are saying that is where the Agreement says
2 it relates to the type of arrangement, the
3 definition of local traffic?
4 A. Yes. How you determine whether a
5 call is local or not for purposes of
6 intercarrier compensation as set forth here would
7 have a bearing on how it was.
8 Q. I think you told me earlier that
9 switched access arrangement related to BellSouth
10 switched access tariffs?
11 A. Either party's tariffs.
12 Q. Is that what you testified to
13 earlier?
14 A. The arrangements are offered for
15 purchase via either party's tariffs.
16 Q. That is your definition of switched
17 access arrangements, basically either party's
18 tariffs?
19 A. I wouldn't say the definition is
20 either party's tariffs -- I shouldn't speak for
21 AT&T. I'm not familiar with their tariffs.
22 BellSouth's tariffs set out the
23 switched access arrangements we offer, and those
24 tariffs are offered via the tariff, and they are
25 described in the tariff.

1 Q. How does arrangement also then get
2 translated to mean trunk group?
3 A. Again, the switched access
4 arrangements that are offered for purchase are
5 all because they are switched around facilities
6 and the corresponding trunks, also known as
7 trunk groups in the industry.
8 Q. But there is nothing in the
9 agreement, then, the Interconnection Agreement
10 for North Carolina that says that; right?
11 A. The language is covered in 5.3.1
12 that talks about originate or terminate of
13 switched access arrangements.
14 Q. And you go on to say there at line
15 18: "As such, the parties included a provision
16 in the Interconnection Trunking and Routing
17 section of Attachment 3 that addressed this
18 conversion." Do you see that?
19 A. Yes.
20 Q. What conversion?
21 A. Basically Section 3.1 talks about
22 to the extent the parties need to convert
23 existing arrangements to the things agreed upon
24 in this new attachment, and you can read it
25 there, it talks about how that will happen.

1 Q. I am still not clear. What was
2 AT&T supposed to convert?
3 A. Well, the way that the language --
4 do you want me to find the language in here?
5 The language states: "The Parties
6 will convert all existing interconnection
7 arrangements and trunks to the interconnection
8 arrangements described in this Attachment in
9 accordance with the following:
10 "Within forty-five days of either
11 Party's written request, the Parties will
12 mutually develop an operations plan..."
13 And then it goes on to talk about
14 how we will do it. Basically that, to the
15 extent needed, the parties will convert to
16 comply with this agreement and it will be done
17 within 45 days of either party's written
18 request. It won't be done, but the parties
19 will develop a plan to accomplish it.
20 Q. Well, the language doesn't say to
21 the extent needed, does it?
22 A. No.
23 Q. It says the parties will convert?
24 A. Right. And then later it does have
25 a trigger that either party has to request it.

1 Q. Has BellSouth requested this of AT&T?
2 A. No.
3 Q. Has AT&T made any request of
4 BellSouth?
5 A. Not to my knowledge.
6 Q. So to the best of your knowledge,
7 there has not been any conversion that has taken
8 place with AT&T's facilities as a result of this
9 Interconnection Agreement; is that correct?
10 A. Right. But I am not sure that,
11 from a technical standpoint, there needs to be
12 any conversion.
13 Q. Why would that be the case?
14 A. Again, I am not sure. I am not a
15 technical SME. But to the extent that their
16 traffic is routed the way AT&T is comfortable
17 under this arrangement, there would be no need
18 to convert, and the same for BellSouth.
19 Q. So it is up to AT&T's comfort level?
20 A. Or BellSouth.
21 Q. Excuse me?
22 A. To the extent either party, you
23 would have to look at how the trunk groups are
24 operating today and the way the interconnection
25 arrangements are and see if there is a need to

1 convert.
2 Q. And today BellSouth has not made any
3 request to AT&T to do any kind of conversion;
4 is that correct?
5 A. Correct.
6 Q. What is the significance of doing
7 this conversion; what does that do relative to
8 the definition of local traffic?
9 A. I don't know that there is a
10 significance around what it does. Again, the
11 definition of local traffic drives back to
12 switched access arrangements. So to the extent
13 that the arrangements aren't situated in a way
14 that AT&T or BellSouth felt was in compliance,
15 then they would have the right to convert under
16 this language.
17 Q. I don't understand that. What are
18 you saying AT&T needed to do in its
19 interconnection trunking arrangements in order to
20 take advantage of the definition of local
21 traffic that is in the Interconnection Agreement?
22 A. I haven't said they needed to do
23 anything to take advantage of that. The way
24 the definition reads now, any call that
25 originates and terminates in the LATA, of

course, this is BellSouth's position, that does not traverse switched access trunk groups is subject to local compensation.

Q. Well, what would AT&T have to do under this Interconnection Agreement as interpreted by BellSouth relative to the local traffic in order to have all traffic within the LATA considered to be local traffic for reciprocal compensation purposes?

A. Again, it would base back to the definition of local traffic. There would have to be no minutes that traverse switched access trunk groups.

Q. So we would have to take all local traffic and convert it over to a switched -- all local traffic and make sure that it is on a local trunk only; is that correct?

A. Yes.

Q. And it cannot traverse a trunk that is combined with intraLATA or interLATA traffic; is that correct?

A. Well, again, it drops back to the trunk type. So what the trunk group type is would determine that.

Q. That is what I am trying to get.

1 Are you saying AT&T would have to take all of
2 its local traffic and put it only on a local
3 trunk group in order to qualify as local traffic
4 for purposes of reciprocal compensation under
5 this Interconnection Agreement?
6 A. Yes, for intraLATA, yes.
7 Q. What about for interLATA?
8 A. InterLATA traffic is not included in
9 the definition of what can be considered local
10 traffic.
11 Q. Okay. So to the best of your
12 knowledge, AT&T hasn't requested any conversion
13 to BellSouth and BellSouth hasn't requested any
14 conversion to AT&T; right?
15 A. Yes.
16 Q. So they are still operating, AT&T is
17 still operating its network from a network
18 configuration aspect the way it first did under
19 the Interconnection Agreement; is that correct?
20 A. Again, I am not familiar with -- I
21 don't know if there have been changes or
22 grooming that has taken place since then.
23 Q. So your position is that AT&T would
24 have to do all of those conversions to its
25 network if, in fact, it has traffic today which

is multi-jurisdictional, running on the same trunk group, that it would have to change all of those configurations, put them on separate trunk groups, one for local, another for intraLATA and interstate in order to comply with this agreement and get traffic appropriately compensated; is that your testimony?

A. The definition of local traffic states it must -- well, it excludes anything over switched access trunk groups. IntraLATA traffic group, there are local trunk groups that are considered local connections. You made a distinction between intraLATA.

Q. Do you know today whether AT&T is sending traffic to BellSouth to be terminated that is local which is on a trunk that also has intraLATA traffic?

A. I would assume so or, thus, we wouldn't have a dispute about this case.

Q. Now, with respect to the interconnection trunking provisions that you are referring to in your testimony, you refer to 3.3.1, 3.17.1, 3.18.1, 3.19.1, 3.20.1. Were these provisions negotiated from a red lining perspective?

1 A. I don't know. I would have to go
2 back and look.
3 Q. If there wasn't any red lining that
4 occurred relative to these particular sections,
5 would that mean that AT&T believed that it was
6 already complying with these provisions?
7 MR. SHORE: Object to the extent --
8 THE WITNESS: I can't speak to what
9 AT&T believed.
10 Q. (By Ms. Cecil) If it was something
11 that AT&T objected to, you would have probably
12 red line versions going back and forth; is that
13 not correct?
14 A. Again, I can't speak to what AT&T
15 thought. If they want to do -- counterpropose
16 language or strike language, yes, they would
17 have proposed that to us.
18 Q. That was the way that the parties
19 operated; if there was an objection, you would
20 normally send back red line, struck through
21 language, et cetera?
22 A. Yes.
23 Q. And you are not sure whether any of
24 these provisions you referred to were subject to
25 red lining and commentary back from AT&T?

A. Again, not without reviewing.

Q. Did you or anybody else from BellSouth ever explain to anybody from AT&T that, to the extent AT&T had combined traffic of local and intraLATA running on the same trunk group, that it would have to change that arrangement and have separate trunk groups in order to take advantage of the definition of local traffic in this Interconnection Agreement?

A. I don't recall if that was specifically discussed or not.

Q. Is there any way you can check your notes to see if it was ever discussed?

A. Yes. But in the normal course of negotiations, after a negotiation is completed we don't retain all of the documents that go along with it. We retain certain red lines and final documents. So it is possible that there is no documentation.

Q. But you didn't have that discussion with Mr. Peacock or Mr. Karno, did you?

MR. SHORE: Object to the form. She testified a minute ago she didn't recall.

THE WITNESS: My answer is the same.

Q. (By Ms. Cecil) To the extent you

1 don't recall, does that indicate that there is a
2 probability that it was not subject to
3 significant negotiation also between the parties?
4 A. I guess that goes to how well my
5 memory is. Again, I specifically recall us
6 discussing the fact that the trunk groups would
7 be separate and that would have an impact on
8 the definition of local traffic. I do not
9 recall discussing to the -- any hypothetical of
10 to the extent this is the way we are doing it
11 now, would we have to change it or anything
12 around that.
13 Q. So I guess I am trying to
14 understand. BellSouth would tell AT&T that, and
15 AT&T would somehow not arbitrate that issue?
16 A. Again, these negotiations were handled
17 after the arbitration was filed. I want to
18 make sure we are clear on the time frame. The
19 arbitration was filed; we continued negotiating
20 things that the parties could negotiate,
21 understanding that if either party -- I am
22 sorry, if at any point we couldn't reach
23 agreement, you go back to the original language.
24 But these negotiations were being held after
25 that arbitration was filed.

1 Q. Well, do you know the language you
2 refer to in your testimony that talks about
3 local interconnection 3.1.1, 3.17.1, 3.18.1,
4 3.19.1, 3.20.1, those given to AT&T for the
5 first time after the arbitration negotiations?
6 A. I don't believe so. I can check
7 the notes, but I don't believe those were new
8 provisions proposed.
9 Q. So before the arbitration, you think
10 these provisions were already in AT&T's
11 possession as proposed by BellSouth?
12 A. Again, I can go back and check; but
13 I did not provide them as new language, so they
14 were provided sometime prior to my involvement.
15 Q. Okay. But when you got involved and
16 when you had discussions with AT&T, you are
17 saying or you think or you don't recall whether
18 or not you advised Mr. Peacock or anybody else
19 from AT&T that AT&T would have to do changes to
20 its network, make these conversions in order to
21 take advantage of the definition of local
22 traffic?
23 MR. SHORE: Objection. Asked and
24 she answered it.
25 THE WITNESS: I don't typically --

1 each carrier has individual network
2 architectures. I don't always go into
3 negotiations knowing what the other party has.
4 That is their responsibility to bring to the
5 table.
6 Q. (By Ms. Cecil) Wouldn't you
7 consider that, just based on your many
8 promotions and extent of interconnection
9 negotiations, wouldn't you consider that to be a
10 significant issue for AT&T; if they were told
11 you are going to have to go out and change
12 your network trunking configuration in order to
13 take advantage of the definition of local
14 traffic, wouldn't that be a big issue to them?
15 MR. SHORE: Same objection as the
16 prior question about what was important to AT&T.
17 THE WITNESS: I can answer from
18 other negotiation experience that not
19 necessarily. There are many carriers that are
20 multiple jurisdiction type carriers that actually
21 prefer that type architecture. They put their
22 local traffic and their local business on one
23 architecture and their access on another.
24 Again, I don't recall specific
25 discussions with AT&T before this dispute about

1 that issue or before the Agreement was signed
2 about that issue.
3 But from a negotiation standpoint,
4 that is not that uncommon. We actually even
5 have carriers who operate using independent ATIS,
6 one for local, one for access, to keep that
7 separate themselves for their own purposes.
8 Q. (By Ms. Cecil) And relative to
9 AT&T, you are not familiar with how its network
10 is designed, are you?
11 A. I am more familiar now than I was
12 at the time we negotiated this.
13 Q. At the time you negotiated, are you
14 saying you didn't realize that AT&T had traffic
15 that was local, intraLATA and interstate
16 potentially on the same trunk group?
17 A. I don't recall that being an issue.
18 I may have known it, but I don't recall that
19 that is -- I don't recall discussing that.
20 Q. Wouldn't that have been an issue
21 that would have come up in the whiteboard
22 diagramming discussions that you mentioned that
23 took place when Mr. Peacock and Mr. Karno were
24 in the room?
25 A. Again, I think that would have been

1 something AT&T would have raised, perhaps. But
2 BellSouth presented here is what the definition
3 is, here is what we are offering you, here are
4 the diagrams as to how it works. I can't
5 speak to what AT&T did or didn't raise.
6 Q. And you don't recall discussing with
7 AT&T that it would have to make conversions of
8 its network in order to take advantage of the
9 definition?
10 A. No. Again, there is conversion
11 language in here. But, no, I don't discuss --
12 recall discussing it.
13 Q. I think you testified earlier that
14 this language, the conversion language was
15 provided to AT&T, you certainly believe, sometime
16 well before you got involved in the
17 negotiations?
18 A. I believe that it was, yes; but I
19 could go back again and check.
20 Q. And to make sure I understand, you
21 have not found any meeting notes where there is
22 any summary of meetings where AT&T was advised
23 that it would need to do this conversion in
24 order to take advantage of the definition of
25 local traffic?

A. Again, that wouldn't be advice that we would give. The parties are negotiating interconnection agreement provisions, and that is the realm of the discussions. It is around that.

Q. So your position is AT&T would have had to figure it out?

A. No. My position is that if that was an issue of concern to AT&T that needed to be raised, that is where it would be raised.

Q. But you don't remember it being raised?

A. No, I don't.

Q. And that doesn't strike you as being unusual in the negotiation as between AT&T and BellSouth?

A. Again, given my experience with other carriers, it is not uncommon for them to want to separate their networks in those manners.

Q. And I guess it is not unusual because you didn't know what AT&T's network was at the time?

A. Again, I don't recall, if --

Q. Now --

MR. SHORE: Let her finish.

1 THE WITNESS: Again, I don't recall
2 discussing that. It may have been discussed and
3 I don't recall it, but I don't recall that.
4 Q. (By Ms. Cecil) Now that we are
5 sitting here with a complaint pending over this
6 issue, does it strike you as unusual that AT&T
7 hadn't been advised that it would need to
8 convert its network in order to take advantage
9 of the definition of local traffic, did not talk
10 to you or to anybody else about why that would
11 be the case?
12 MR. SHORE: I am going to object to
13 the "advised" characteristic. I know what her
14 testimony is concerning her negotiations with
15 AT&T. But to the extent AT&T had the agreement
16 and could have read it for itself, I think it
17 was advised.
18 So with that objection to Ms.
19 Cecil's characterization, you can answer the
20 question.
21 THE WITNESS: Again, I have
22 forgotten how it was phrased now, but it did
23 not or would not today seem odd because we do
24 have carriers who, again, are separating their
25 networks and keep separate or even go down the

1 route of having combined and go to separate
2 networks for local access for purposes which
3 may, obviously, be unique to them but, from what
4 I gathered from discussions, it makes it easier
5 for them for jurisdictional purposes, for tax
6 reporting, other types of implications outside of
7 our relationship.
8 So, no, it does not seem odd that
9 that would be something that a company like AT&T
10 which has multiple arms or multiple facets of
11 its business would want.
12 Q. (By Ms. Cecil) Yet, you said in
13 your testimony you were surprised when you
14 learned that this was a dispute with AT&T?
15 A. Yes.
16 Q. Curious, were you ever briefed before
17 you went into any AT&T negotiations for the
18 first time about what issues were important to
19 AT&T?
20 A. Briefed by BellSouth?
21 Q. Anybody at BellSouth, right.
22 A. About what issues outside of just
23 knowing the issues that were filed for
24 arbitration?
25 Q. Just generally, did anybody ever tell

1 you from BellSouth, hey, got this new job, Beth,
2 you are going in there to discuss and negotiate
3 with AT&T, here are their hot buttons?
4 A. No, I don't recall having any
5 discussions on that.
6 Q. After this complaint was filed, did
7 anybody from BellSouth tell you: I am not
8 surprised, we have known the definition of local
9 traffic has been a big issue for AT&T in every
10 arbitration since the 1996 Act was passed?
11 A. No, not to that extent, no.
12 Q. Well, what do you mean? To any
13 extent?
14 A. We had discussions around this
15 complaint and where we are at; but not in the
16 characterization of since'96, since '97, no.
17 Q. So no one has told you from
18 BellSouth that AT&T is always concerned about
19 the definition of local traffic in its
20 interconnection negotiations?
21 A. Not specifically put that way. I
22 mean, obviously, every carrier has an interest
23 in what that definition is. But not anything
24 outside the norm of any carriers.
25 Q. Do you know a fellow named Greg

1 Follensbee?
2 A. Yes.
3 Q. Do you know he used to work for
4 AT&T?
5 A. Yes.
6 Q. Do you know he was AT&T's lead
7 negotiator with BellSouth for the Mississippi
8 Interconnection Agreement?
9 A. I don't know lead or not. I know
10 he handled local interconnection.
11 Q. Do you know Mr. Follensbee negotiated
12 on behalf of AT&T to get a LATA wide definition
13 of local traffic?
14 A. No -- I mean, he was a negotiator.
15 I know that is a definition. I guess that is
16 a conclusion that can be drawn.
17 Q. Have you had any discussions with
18 Mr. Follensbee about this complaint?
19 A. Very little.
20 Q. What were those discussions?
21 A. I asked him in the context of the
22 discovery that was served on us whether he had
23 any work papers in response to one of the
24 interrogatories. We have discussed, I am trying
25 to think, at a high level each party's

1 discussions and where we are at.
2 Q. What did you talk about when you say
3 you discussed? What did he say and what did
4 you say?
5 A. Nothing -- I am trying to think.
6 Nothing substantive. I really didn't want to
7 talk much to him about it because I didn't know
8 if he would be comfortable talking about it.
9 And I don't know the provisions of his leaving
10 AT&T and how that carries over into these types
11 of things.
12 We talked about the fact that -- I
13 am trying to think. Again, did he have any
14 work payments; did he bring anything with him
15 from AT&T.
16 Q. What did he say?
17 A. No. So I don't have to answer
18 that. No, he didn't have any work papers or
19 anything since he had begun work at BellSouth
20 related to this.
21 We talked about the fact that it was
22 a big case and that both parties obviously had
23 an interest in the case. But that is about
24 it.
25 Q. He didn't say AT&T will go to the

1 wall on this one because I negotiated the
2 definition of local traffic in the Mississippi
3 Agreement?
4 A. No, he didn't say that.
5 Q. Did he say AT&T would take it very
6 seriously?
7 A. Yes, he did say that.
8 Q. Did he say AT&T for years has been
9 trying to get a LATA wide definition of local
10 traffic?
11 A. No, he did not say that.
12 Q. So what exactly did he say if he
13 didn't say that and you had all these
14 discussions?
15 MR. SHORE: She said they didn't
16 have all these discussions. You said she had
17 all these discussions. You are mischaracterizing
18 the testimony.
19 MS. CECIL: Strike that. I am
20 sorry.
21 THE WITNESS: It was very
22 unmemorable. In the context of me asking if he
23 had any documents, he asked me when the
24 deposition was. He asked me when the hearing
25 was.

1 Q. (By Ms. Cecil) Did he ask you who
2 was taking this deposition, who was taking your
3 deposition?
4 A. I don't think he did ask me, but I
5 think he did know it was you. But I don't
6 know if that was because you are AT&T's outside
7 counsel.
8 Q. Do you know how he would know that?
9 A. I assume because you are acting and
10 filing these documents on behalf of BellSouth.
11 MR. SHORE: On behalf of AT&T, not
12 on behalf of BellSouth.
13 THE WITNESS: I am sorry, on behalf
14 of AT&T.
15 He asked -- I am trying to think of
16 anything else. That is basically it. Nothing
17 detail oriented.
18 MS. CECIL: Okay. We have to 5:00?
19 MR. SHORE: That's fine.
20 MS. CECIL: Or more. At least to
21 5:00.
22 MR. SHORE: I won't start
23 complaining until at least 5:00, or 5:30 since
24 we started late.
25 MS. CECIL: I appreciate that.

1 Let's take a break for 15 minutes or so.
2 (A recess was taken.)
3 (Mr. King is no longer present.)
4 Q. (By Ms. Cecil) Ms. Shiroishi, I
5 would like to now, in our time left, go through
6 the Second Interconnection Agreement and some
7 provisions in the Second Interconnection
8 Agreement. If you can look at what's been
9 marked as AT&T deposition Exhibit 3 and turn to
10 Attachment 3.
11 If you will turn to, it is
12 Attachment 3, page 24, Section 5.3.
13 I would like to compare this
14 provision to the interconnection provisions from
15 the Mississippi Agreement that we talked about
16 relative to the treatment for ISP-bound traffic.
17 I think you will agree in the Mississippi
18 Agreement, AT&T and BellSouth agreed to treat
19 the ISP-bound traffic or to terminate it at the
20 local rates; is that correct?
21 A. At the same rates as those for local
22 traffic, yes.
23 Q. Now, in this North Carolina
24 Agreement, the parties agreed to something
25 different; is that not correct?

A. Well, concept wise it is similar. The rates are different. But the parties did agree to treat or use the same rates for local traffic and ISP-bound traffic.

Q. But at the time the parties entered into the Mississippi Agreement, the FCC had not yet released its April 27, 2001 order; is that not correct?

A. That is correct.

Q. And until that order was released, BellSouth was still taking the position that, other than in Mississippi, that bound-ISP traffic should be recognized as jurisdictionally interstate and that it should not be subject to reciprocal compensation; is that correct?

A. Yes. I mean, at that point, that was our position, and the industry was still dealing with how to handle it. We can have interconnection agreements, obviously, such as the Mississippi AT&T one, which called or had provisions for intercarrier compensation for ISP-bound traffic.

Q. And so when the North Carolina Agreement was first executed, the parties basically said the FCC has come out with this

1 order on April 27, 2001, we are going to agree
2 to comply with that order, and we will
3 subsequently file an amendment to the agreement
4 with respect to that compliance. Is that what
5 happened?
6 A. In a nutshell, yes.
7 Q. And again, that is different than
8 what occurred with the Mississippi Agreement;
9 correct?
10 A. Yes.
11 Q. Let's go to page 25, 5.3.1. I
12 guess five lines down from the top of that
13 page, that's where the definition of local
14 traffic is really found in this Agreement; would
15 you agree with that?
16 A. Yes.
17 Q. This is the language that says
18 additionally: "The parties agree to apply a LATA
19 wide local concept to this Attachment 3, meaning
20 that traffic that has traditionally been treated
21 as intraLATA toll traffic will now be treated as
22 local for intercarrier compensation purposes,
23 except for those calls that are originated or
24 terminated through switched access arrangements
25 as established by the State Commission or FCC."

1 Do you agree that is what that says?
2 A. Yes.
3 Q. Let's turn over, then, to the next
4 page, page 26 of Attachment 3, and Section
5 5.3.3.
6 With respect to the first line,
7 switched access traffic: "Switched Access Traffic
8 is defined as telephone calls requiring local
9 transmission or switching services for the
10 purpose of origination or termination of
11 Intrastate InterLATA, and Interstate InterLATA
12 traffic." Do you see that?
13 A. Yes.
14 Q. Now, that sentence doesn't say that
15 switched access traffic includes any traffic
16 within the LATA, does it?
17 A. It doesn't address that.
18 Q. Okay. And as we discussed earlier,
19 the last sentence of that Section 5.3 that says
20 "This section is interrelated to Section 5.3.1,"
21 BellSouth's position is that only applies to the
22 Voice over Internet Protocol language in the
23 first two sentences above; is that correct?
24 A. I don't know that I have stated that
25 it only applies to the VOIP. I stated in my

1 testimony that that is the reason that section
2 was put there, or that sentence was put there.
3 Q. So what does that sentence apply to?
4 MR. SHORE: I am going to object to
5 the extent you are asking her for legal
6 conclusions.
7 THE WITNESS: I actually haven't
8 thought about that question. Again, I think you
9 go back to the local traffic definition speaks
10 for itself with the exclusion. I don't know
11 that I have an answer for it at this point in
12 time.
13 Q. (By Ms. Cecil) I am trying to
14 clarify it. So your testimony where you
15 reference that particular section, you were not
16 trying to tell the Commission that the language
17 "This section is interrelated to Section 5.3.1"
18 related only to VOIP?
19 A. Let me look at my testimony, but I
20 believe it says --
21 Q. It is on page 9.
22 A. Right. And the testimony as it is
23 stated is: "The reference to the
24 interrelationship was added as the Parties were
25 negotiating mutually agreeable language to deal

1 with VOIP."
2 Q. Well, what do you want the
3 Commission to conclude from that?
4 A. That that language was added as the
5 parties were negotiating VOIP. And we have
6 walked through earlier what the relationship is
7 back to attached -- I am sorry, back to this
8 local traffic definition.
9 Q. Okay. Let's go down to 5.3.4, that
10 paragraph. That paragraph deals with what is, I
11 think, frequently referred to as virtual NXX; is
12 that not correct?
13 A. It is.
14 Q. And the first sentence says: "The
15 parties have been unable to agree as to the
16 appropriate compensation for calls which
17 originate in a LATA and terminate to a physical
18 location outside of that LATA but to a number
19 assigned to a rate center within that LATA."
20 Do you see that?
21 A. Yes.
22 Q. And with respect to this particular
23 issue, did the parties agree that they basically
24 were not going to argue about it anymore and
25 they were not going to bill -- neither was

1 going to bill each other reciprocal time for
2 this traffic?
3 A. I have to reread this.
4 Yes, that is what the provision
5 states.
6 Q. So this particular issue relates to
7 traffic whether it is in the LATA or out of
8 the LATA, wouldn't you agree?
9 A. I am sorry?
10 Q. This particular issue relates to
11 whether traffic is in the LATA or not in the
12 LATA by virtue of the NXX virtual arrangement?
13 A. Well, it stated there what it
14 relates to. It relates to "calls which
15 originate in a LATA and terminate to a physical
16 location outside of that LATA but to a number
17 assigned to a rate center within that LATA."
18 Q. But the call is really within the
19 LATA, the call itself; it is just assigned to a
20 rate center outside of the LATA?
21 A. No. It is "calls that originate in
22 a LATA and terminate to a physical location
23 outside of that LATA but to a number assigned
24 to a rate center within that LATA."
25 Q. Let's move on to 5.3.7, Percent

1 Local Usage. Going back to your earlier
2 testimony this afternoon, I want to make sure I
3 understand some of your answers before I ask you
4 some questions about 5.3.7.
5 Was it your testimony earlier today
6 that in order for AT&T to take advantage of the
7 definition of local traffic that it would have
8 to have all of its local traffic on a trunk or
9 trunk and facilities that supports and transports
10 only local traffic?
11 A. I am uncomfortable with "take
12 advantage of." The way that the definition
13 reads: Any call that originates and terminates
14 in a LATA, except for calls that go over
15 switched access trunk groups, would be considered
16 local under this agreement.
17 To the extent that a call originates
18 or terminates over switched access trunk group,
19 it would not be considered local under this
20 Agreement. So how you, I guess, whether it is
21 taking advantage of or not to me is a little
22 bit more of an opinion.
23 Q. I am sorry. Well, going back to
24 your discussion in your testimony about other
25 language and attachments to read which addresses

1 the new definition of local traffic, we talk
2 about converting trunks or converting
3 arrangements and those kinds of things, I just
4 want to make sure I understand that.
5 When you look at those sections of
6 the Agreement that you refer to, they require
7 AT&T to send all of its local traffic over a
8 local trunk, is that not correct, in order to
9 take advantage of -- I shouldn't say take
10 advantage of, in order for that traffic to be
11 considered local traffic for reciprocal
12 compensation purposes?
13 A. Yes.
14 Q. So you would not be able to combine
15 intraLATA traffic on that same toll trunk?
16 A. Well, intraLATA, whether it is deemed
17 local or not local, would be determinant upon
18 whether it traversed a switched access trunk
19 group. IntraLATA can traverse a local toll
20 group, in which case it would be counted as
21 local because that is not a switched access
22 trunk group.
23 Q. I guess what I am trying to come
24 back with and make sure I understand is that if
25 AT&T is sending traffic over what is considered

1 in the switched access arrangement that traffic
2 cannot be considered local traffic; is that what
3 you are saying?
4 A. Right. Under the compensation
5 purposes, it is excluded from local.
6 Q. If that is the case, why then would
7 the parties have paragraph 5.3.7 which talks
8 about a percentage local usage factor?
9 A. Because you still use factors to
10 bill. And the way that those factors are
11 determined and the way they are calculated is
12 based on the description in the local
13 interconnection agreement. Factors are done on a
14 statewide basis, so each carrier -- and if you
15 -- and this references the percent of the use
16 of usable platform as it is. It points you
17 back to your interconnection agreement for what
18 is deemed local or not.
19 So in the examples of this contract
20 with AT&T, the PLU that AT&T would compute and
21 submit to BellSouth would be based on what the
22 definition of local traffic is in this
23 agreement. And that would still, again, be done
24 on a statewide basis. Within the state you are
25 going to have a percent of some that is

1 interstate, some that is -- and then the
2 remaining PLU to get the third bucket of
3 intrastate access.
4 Q. I understand that for purposes of
5 interstate. But right now we are talking about
6 percent local usage. What is the purpose of a
7 percent local usage factor?
8 A. For each party to bill the other the
9 appropriate rates for minutes of use.
10 Q. Why would you need to do that for
11 local if, according to what you have indicated,
12 you can only have local traffic and only local
13 traffic on a local interconnection trunk?
14 A. When AT&T computes its PLU in
15 accordance with this agreement, they would use
16 that criteria to develop the factor, the PLU.
17 Q. But why would AT&T even be entitled
18 to do that under your theory of the
19 Interconnection Agreement, which is local traffic
20 and local traffic only has to be on a local
21 interconnection trunk?
22 A. Well, the parties agree to a certain
23 way to handle compensation for this contract,
24 and the parties agree that local traffic would
25 be anything that originated and terminated in a

1 LATA except for calls that went over switched
2 access trunk groups.
3 So that is the basis for what the
4 parties agree to consider as local versus
5 non-local. The PLU is the mechanism to
6 effectuate that billing, and each party would
7 then take that definition and use it in
8 developing their PLU in how they considered each
9 call to be categorized as local or not local
10 for purposes of developing that PLU.
11 Q. That would make perfect sense for me
12 if, in fact, AT&T was allowed to combine
13 different jurisdictional types of traffic on the
14 same trunk.
15 A. Okay. But these factors are not
16 reported on a trunk basis. These factors are
17 reported on a statewide basis. And within the
18 state, you will have, obviously, interstate,
19 intrastate, and local.
20 Q. But again, if AT&T was running all
21 of its local traffic over local trunks, as you
22 seem to indicate would need to be the case to
23 take advantage of the definition of local
24 traffic, there would not be any need for a
25 percent local usage; you would be able to tell

it by virtue of --

A. No.

MR. SHORE: I have to object to take advantage of.

THE WITNESS: No. Again, there is a provision that states when the terminating party has the technology, that can be used in lieu of it. Until that point, a factor is still necessary because these are billed on a statewide basis. So AT&T under this Agreement is to report to BellSouth a PLU in accordance with this agreement and what is considered local under this Agreement per state.

Q. (By Ms. Cecil) If that is the case, then why did you freeze AT&T's PLU factor last year?

A. Because when we realized that we had a dispute about this issue, we decided that, in an effort to try to resolve the dispute in negotiations while that was going on, to freeze that as it is rather than the other alternative would have been to invoke the phrase that says "notwithstanding the foregoing where the terminating agreement has message or terminating technology" and move those factors to what

1 BellSouth believes to be the correct factors
2 under the dispute. However, in an effort to
3 try to settle the issue, we decided to freeze
4 them until we have resolution.
5 Q. What was your justification under the
6 Interconnection Agreement for freezing that
7 factor?
8 A. Well, again, we have the right under
9 this Agreement to use where the terminating
10 agreement has message terminating technology. So
11 that provision of the Agreement allows us to use
12 our recordings to do that.
13 Q. Is that what you are doing today?
14 A. Again, I explained, we sent a letter
15 to AT&T which, to my knowledge, we haven't
16 received a response to -- I may be wrong about
17 that -- basically stating that in the interim
18 while the parties try to resolve this issue or
19 if there is Commission action that we would
20 leave it in place at that point in time.
21 Q. Well, I just asked you what was your
22 justification for freezing, and you said the
23 language here that says that we can use our
24 message recording technology.
25 A. Uh-huh (affirmative).

Q. Are you using message recording technology?

A. We are using it to know what we believe those factors to be. However, in an effort of trying to resolve this issue, again, we sent a letter to AT&T explaining how we propose to handle that.

Q. But you are not billing based on the message recording technology, you are still billing based on the frozen PLU factors, are you not?

A. Yes. If we bill based on the technology, the bills to AT&T would be higher. In an effort to end this in a good faith matter, we decided not to do that.

Q. Why would the bills be higher?

A. Because under the Interconnection Agreement it states that any call that originates in -- excuse me. Any call that traverses switched access arrangements is excluded from local. Under the ATX ACNA, all trunk groups are switched access. So that factor for ATX would be zero.

Q. You have message recording technology now, as you indicated; right?

A. Yes.

Q. And why aren't you using it?

A. Because in an effort to resolve this and while we resolve it BellSouth felt that the good faith thing to do would be to freeze it where it is until the parties resolve the issue or we get resolution from a commission.

Q. Are you using message recording technology with any other CLPs?

A. Yes.

Q. Who would that be?

A. I don't know off the top of my head.

Q. Well, how do you know, then, that you are doing it with any other CLPs?

A. Because I know that we are doing it with several. I don't know the specifics of it. That is not my area.

Q. Well, in a message technology world, if you were using message technology and AT&T was sending all of its local traffic over on a local trunk only, there would be no need for a percent local usage, is that what you are saying?

A. That is correct. You would not need

1 to apply that. You could if some companies
2 decide to continue to provide those, but there
3 is no need to do that. If you don't want to.
4 Q. Are you aware of whether AT&T is
5 sending any traffic which you believe should be
6 billed as local to BellSouth for termination
7 over switched access arrangements?
8 A. It is my understanding that -- will
9 you ask me that again?
10 Q. Yes. Do you know whether AT&T is
11 sending BellSouth traffic over switched access
12 arrangements which AT&T contends should be billed
13 as local traffic?
14 A. Yes. I believe that is why this
15 complaint proceeding was filed.
16 Q. Do you know whether BellSouth has
17 billed AT&T at local reciprocal rates for any of
18 that traffic?
19 A. Any of that traffic)?
20 Q. Yes.
21 A. Why should we bill it if we are
22 billing it as local?
23 Q. I am just trying to understand how
24 are you billing AT&T and what your knowledge of
25 AT&T's traffic and how BellSouth bills it.

1 Is AT&T sending you traffic over
2 switched access arrangements which BellSouth is
3 terminating at local reciprocal compensation
4 rates?
5 A. Because of the freeze that I
6 mentioned earlier, the PLUs are locked in at a
7 level which represents some traffic that, yes,
8 is being terminated to BellSouth that under our
9 definition of this agreement would not be
10 considered local.
11 Q. Do you know whether AT&T did that
12 under the First Interconnection Agreement and
13 BellSouth billed it as local?
14 A. I do not have any knowledge of the
15 billing under the First Interconnection
16 Agreement.
17 Q. So is it BellSouth's position that
18 if you win this complaint at the North Carolina
19 Commission that you are going to go back and
20 try to charge AT&T higher rates for any of that
21 traffic which has been transported over switched
22 access arrangements?
23 A. I have not discussed what the plans
24 are related to that issue. I don't know how
25 that would be handled.

1 Q. Are you familiar with a product at
2 AT&T, a local product AT&T provides over 4ESS
3 equipment?
4 A. Not by that description.
5 Q. Are you familiar with a product that
6 AT&T provides over 4ESS equipment referred to as
7 NOTAL traffic?
8 A. Not a retail product. I am aware
9 that AT&T has submitted factors to BellSouth
10 that they call NOTAL factors.
11 Q. What do you understand that NOTAL
12 factor traffic to traverse?
13 A. I am not aware of the specifics.
14 When the issue came up early on, we asked for
15 a definition of what these factors were and
16 where they came from, and I don't recall ever
17 seeing a response on that issue. But again, I
18 am not sure. That could have come afterwards
19 and I haven't seen it.
20 Q. And you don't know whether AT&T did
21 that under the First Interconnection Agreement?
22 A. The NOTAL?
23 Q. Yes.
24 A. It is not my understanding that
25 those were provided with that terminology.

1 Because when they were first reported, the
2 question came to us because it was a new term
3 to the group that receives the factors. I do
4 believe that AT&T submitted factors on a LATA
5 basis for a while.
6 Q. But do you know whether or not AT&T
7 offered service to its customers under a 4ESS
8 arrangement which BellSouth terminated under a
9 switched access arrangement but yet charged local
10 compensation under the First Interconnection
11 Agreement?
12 A. I am not aware. But I know the
13 First Interconnection Agreement, there was a
14 different definition of local traffic, and that
15 could easily have qualified.
16 Q. If AT&T had billed it as local; is
17 that correct?
18 A. Correct.
19 Q. Let's look at the language in 5.3.7,
20 Percent Local Usage, and compare that to the
21 language in 5.3.9 that talks about Percentage
22 Interstate Usage. Let's look at the Interstate
23 Usage first. Do you see there where it says:
24 "For combined interstate and intrastate AT&T
25 traffic terminated by BellSouth over the same

1 facilities." Do you see that?
2 A. Yes.
3 Q. If you look back at Percent Local
4 Usage, there is no reference to same facilities
5 in that Section 5.3.7, is there?
6 A. No.
7 Q. Do you know why that would be the
8 case?
9 A. I don't. I don't know the history
10 behind this negotiated language. I do know that
11 these specific requirements associated with PLU,
12 as it states, they are found in the guide, and
13 that under PIU gives an explanation of what that
14 is; but it also states that all jurisdictional
15 report requirements are subject to the tariff.
16 Q. Have you ever seen these guidelines
17 that they are referring to in 5.3.7?
18 A. Yes.
19 Q. Do you have a copy of them?
20 A. Not here, but I do have a copy of
21 them.
22 Q. Do you have them available?
23 A. Yes.
24 Q. Let's move to the second amendment
25 to this Interconnection Agreement. This has

1 previously been marked as AT&T deposition Exhibit
2 4. Let's turn over to Exhibit 1. Can you
3 tell me the history of this Exhibit 1 and why
4 it was executed by the parties?
5 A. As stated earlier, the parties
6 continued to negotiate certain things after the
7 arbitration. Additionally, at the time -- and I
8 don't recall the timing of the confidential
9 settlement that BellSouth entered into with AT&T,
10 but it was around the same time frame as the
11 North Carolina Agreement had to be finalized for
12 filing. So the parties entered into the
13 agreement in the North Carolina original
14 agreement, I guess what I consider place holder
15 language we read earlier about the parties will
16 implement the party's ISP order on remand and so
17 forth. This agreement was done to incorporate
18 those changes into the Agreement after the
19 parties had completed the negotiations of that
20 confidential settlement and the related terms.
21 Q. And if you look at Section 5.3.1, it
22 includes this same definition of local traffic,
23 the LATA wide local concept; is that correct?
24 A. Yes.
25 Q. So that didn't change from the

1 original agreement to this amendment in Exhibit
2 1, did it?
3 A. No. At the time we entered into
4 this amendment, however, we knew we had a
5 dispute about this issue, and that is why the
6 language is verbatim from the first agreement.
7 I say no. I didn't actually compare the two.
8 I think the only somewhat substantive
9 difference is the addition of the "nothing in
10 this agreement shall be construed" sentence.
11 Q. And on the next page, number 2,
12 5.3.3, where it sets out the rates to be used
13 for both local and ISP traffic, those are new
14 provisions, that was not in the original
15 agreement; correct?
16 A. Correct. The original agreement
17 stated that the parties will implement the ISP
18 order on remand.
19 Q. Let's go over to page 4, 5.3.10,
20 Switched Access Traffic. Now, if you say that
21 this Exhibit 1 was executed by the parties after
22 you knew of this dispute from AT&T, why did
23 they not argue and want to change the
24 definitions of switched access traffic?
25 A. I don't know that AT&T would have

1 agreed to that. At this point we were trying
2 to implement the changes that the parties had
3 agreed to that we wanted to get into the
4 agreement. But we did negotiate substantially
5 on this issue and tried to reach resolution and
6 neither party could -- or we couldn't come to
7 agreement on a way to change it to suit both
8 parties, so we decided to leave it as is.
9 Q. So 5.3.10, from the beginning all
10 the way to the end, is exactly the same as in
11 the original -- or in the Interconnection
12 Agreement before it was amended; is that not
13 correct?
14 A. I don't know that for a fact. I
15 would have to look at it line by line to see.
16 There were extensive discussions about this, and
17 I don't recall.
18 Q. You don't know if 5.3.10 is
19 identical?
20 A. We can do a quick compare, but I
21 don't know off the top of my head.
22 Q. And if you would turn over to page
23 5, Section 5.3.14, there is again the paragraph
24 that deals with Percent Local Usage.
25 Then 5.3.16, there is also the

1 provision that deals with Percentage Interstate
2 Usage. Is that not correct?
3 A. Yes. And I believe, I have to go
4 back and look at my notes. I believe the
5 reason those were redone was just for
6 renumbering purposes more than anything else.
7 Q. Ms. Shiroishi, do you know how many
8 LATAs there are in North Carolina?
9 A. I don't off the top of my head.
10 Q. I want to ask you a few questions
11 about your efforts to answer AT&T's discovery.
12 I think you mentioned earlier that you have been
13 able to find some e-mails and some documents
14 that are responsive?
15 A. Yes.
16 MS. CECIL: If I can have a break,
17 we might be finished.
18 (A recess was taken.)
19 MS. CECIL: Nothing further.
20 MR. SHORE: I don't have any
21 questions.
22 (Deposition concluded at 5:00 p.m.)
23
24
25

1 DESCRIPTION OF EXHIBITS

2

3 **EXHIBIT IDENTIFICATION**

4 1 Direct Testimony of Beth Shiroishi

5 before the North Carolina Utilities

6 Commission, December 18, 2002

7 2 Agreement between BellSouth

8 Telecommunications, Inc. and AT&T

9 Communications of the South Central

10 States, Inc., Mississippi

11 3 Agreement between BellSouth

12 Telecommunications, Inc. and AT&T

13 Communications of the Southern States,

14 Inc., North Carolina

15 4 Second Amendment to the Interconnection

16 Agreement Between AT&T Communications of

17 the Southern States, Inc. and BellSouth

18 Telecommunications, Inc. for the State

19 of North Carolina

20

21 (Original exhibits attached to the

22 original transcript.)

23

24

25

STATE OF GEORGIA:

COUNTY OF FULTON:

I hereby certify that the foregoing transcript was reported, as stated in the caption, and the questions and answers thereto were reduced to typewriting under my direction; that the foregoing pages represent a true, complete, and correct transcript of the evidence given upon said hearing, and I further certify that I am not of kin or counsel to the parties in the case; am not in the employ of counsel for any of said parties; nor am I in anywise interested in the result of said case.

1 Disclosure Pursuant to Article
2 8(B) of the Rules and Regulations of the
3 Board of Court Reporting of the Judicial
4 Council of Georgia, I make the following
5 disclosure:
6 I am a Georgia Certified Court
7 Reporter, here as a representative of
8 Alexander Gallo & Associates, Inc., to report
9 the foregoing matter. Alexander Gallo &
10 Associates, Inc., is not taking this
11 deposition under any contract that is
12 prohibited by O.C.G.A. 5-14-37 (a) and (b).
13 Alexander Gallo & Associates,
14 Inc., will be charging its usual and
15 customary rates for this transcript.
16
17
18
19 ALEXANDER J. GALLO, CCR-B-1332
20
21
22
23
24
25

CAPTION

The Deposition of **Elizabeth R.A. Shiroishi**, taken in the matter, on the date, and at the time and place set out on the title page hereof.

It was requested that the deposition be taken by the reporter and that same be reduced to typewritten form.

It was agreed by and between counsel and the parties that the Deponent will read and sign the transcript of said deposition.

1 CERTIFICATE

2 STATE OF_____:

3 COUNTY/CITY OF_____:

4 Before me, this day, personally

5 appeared, **Elizabeth R.A. Shiroishi**, who, being

6 duly sworn, states that the foregoing

7 transcript of his/her Deposition, taken in

8 the matter, on the date, and at the time and

9 place set out on the title page hereof,

10 constitutes a true and accurate transcript of

11 said deposition.

12 _____

13 **Elizabeth R.A. Shiroishi**

14

15 SUBSCRIBED and SWORN to before me this

16 _____ day of_____, 2003 in the

17 jurisdiction aforesaid.

18 _____ _____

19 My Commission Expires Notary Public

20

21

22

23

24

25

DEPOSITION ERRATA SHEET

RE: Alexander Gallo & Associates
File No. 3587
Case Caption: AT&T Communications of the Southern States, LLC, et al., vs. BellSouth Telecommunications, Inc.
Deponent: **Elizabeth R.A. Shiroishi**
Deposition Date: January 13, 2003

To the Reporter:
I have read the entire transcript of my Deposition taken in the captioned matter or the same has been read to me. I request that the following changes be entered upon the record for the reasons indicated. I have signed my name to the Errata Sheet and the appropriate Certificate and authorize you to attach both to the original transcript.

Page No. _____ Line No. _____ Change to: _____

_____

Reason for change: _____

Page No. _____ Line No. _____ Change to: _____

_____

Reason for change: _____

Page No. _____ Line No. _____ Change to: _____

_____

Reason for change: _____

Page No. _____ Line No. _____ Change to: _____

_____

Reason for change: _____

Page No. _____ Line No. _____ Change to: _____

_____

Reason for change: _____

Deposition of Elizabeth R.A. Shiroishi

Page No. _____ Line No. _____ Change to: _____

_____

Reason for change: _____

Page No. _____ Line No. _____ Change to: _____

_____

Reason for change: _____

Page No. _____ Line No. _____ Change to: _____

_____

Reason for change: _____

Page No. _____ Line No. _____ Change to: _____

_____

Reason for change: _____

Page No. _____ Line No. _____ Change to: _____

_____

Reason for change: _____

Page No. _____ Line No. _____ Change to: _____

_____

Reason for change: _____

SIGNATURE: _____ DATE: _____

Elizabeth R.A. Shiroishi

BELLSOUTH TELECOMMUNICATIONS, INC.

DIRECT TESTIMONY OF BETH SHIROISHI

BEFORE THE NORTH CAROLINA UTILITIES COMMISSION

DOCKET NO. P-55, Sub 1376

DECEMBER 18, 2002

Q. PLEASE STATE YOUR NAME, YOUR POSITION WITH BELLSOUTH TELECOMMUNICATIONS, INC. ("BELLSOUTH") AND YOUR BUSINESS ADDRESS.

A. My name is Elizabeth R. A. Shiroishi. I am employed by BellSouth as Assistant Director, Interconnection Services Marketing. My business address is 675 West Peachtree Street, Atlanta, Georgia 30375.

Q. PLEASE PROVIDE A BRIEF DESCRIPTION OF YOUR BACKGROUND AND EXPERIENCE.

A. I graduated from Agnes Scott College in Decatur, Georgia, in 1997, with a Bachelor of Arts Degree in Classical Languages and Literature. I began employment with BellSouth in 1998, in the Interconnection Services Pricing Organization as a pricing analyst. I then moved to a position in product management, and now work as Assistant Director, Interconnection Services Marketing. In this position, I am responsible both for negotiating and for overseeing the negotiations of Interconnection Agreements, as well as Local Interconnection issues.

EXHIBIT
AT&T - 1

Alexander Gallo & Associates, Inc.

310

Q. WHAT IS THE PURPOSE OF YOUR TESTIMONY?

A. My testimony establishes that BellSouth has applied the appropriate charges for reciprocal compensation in accordance with the definition of "Local Traffic" as set forth in the Interconnection Agreement between BellSouth and AT&T. I rebut the allegations to the contrary of AT&T as set forth in its Complaint and in the testimony of Jeffery A. King dated November 26, 2002. In addition, I explain that it was BellSouth's intent at the time it entered into the Agreement that calls that originated or terminated via switched access arrangements would not be included within the definition of "Local Traffic".

Q. PLEASE EXPLAIN THE DEFINITION OF "LOCAL TRAFFIC" AS IT IS SET FORTH IN THE INTERCONNECTION AGREEMENT.

A. Section 5.3.1.1 of Attachment 3 of the Interconnection Agreement dated July 19, 2001, defines Local Traffic as follows:

> The Parties agree to apply a "LATAwide" local concept to this Attachment 3, meaning that traffic that has traditionally been treated as intraLATA toll traffic will now be treated as local for intercarrier compensation purposes, **<u>except for those calls that are originated or terminated through switched access arrangements</u>** as established by the State Commission or FCC. (emphasis added)

Pursuant to this plain and unambiguous language, the Parties agreed to consider IntraLATA toll traffic as "Local Traffic" unless such traffic ***"originated or terminated through switched access arrangements as established by the State***

311

Commission or FCC." The exclusion is specifically targeted at intraLATA traffic.

Q. HAS BELLSOUTH BREACHED THE INTERCONNECTION AGREEMENTS AS ALLEGED BY AT&T AND AS MR. KING CLAIMS IN HIS TESTIMONY (PAGE 5)?

A. No. Mr. King is incorrect in his allegation that "all calls transported and terminated within a "LATA" ("LATAwide Traffic"), would be subject to the local reciprocal compensation rates set forth in the Second Interconnection Agreement." As the contract language quoted above says, if an intraLATA call originates or terminates through switched access arrangements, then that call is excluded from the definition of Local Traffic. Such a call would be governed by BellSouth's switched access tariffs and would be subject to the appropriate switched access rates. BellSouth has not breached the Interconnection Agreement by charging AT&T switched access rather than reciprocal compensation rates for intraLATA calls "originated or terminated through switched access arrangements."

Q. WERE YOU INVOLVED IN THE NEGOTIATION OF THE CONTRACT LANGUAGE AT ISSUE IN THIS PROCEEDING?

A. Yes. I was very involved in the negotiation of this language with the AT&T negotiation team.

1 Q. WAS MR. KING A PART OF THE NEGOTIATIONS?

2

3 A. No. He was not involved in any of the negotiations regarding this contract
4 language. His involvement began after the contract was signed and the dispute
5 arose regarding this language.

6

7 Q. WAS THERE DISCUSSION AND NEGOTIATION REGARDING THE
8 DEFINITION OF LOCAL TRAFFIC?

9

10 A. Yes. AT&T and BellSouth started the negotiations of the Second Interconnection
11 Agreement using a definition of local traffic that was similar to the definition in
12 the First Interconnection Agreement. During the course of negotiations,
13 BellSouth offered to AT&T a definition that it had used with other carriers. This
14 new definition expanded what was considered local within the LATA, but still
15 excluded minutes that traversed switched access arrangements that the carrier had
16 purchased from BellSouth. After discussion about the meaning of the definition
17 and the exclusion, including specific discussion about the fact that the language
18 excluded from the definition of Local Traffic calls that originated or terminated
19 through switched access arrangements, AT&T responded that it wanted to avail
20 itself of this new LATA wide local traffic definition with the exclusion for traffic
21 that originated or terminated through switched access arrangements, but proposed
22 a slight language change. The minor modification (discussed below) did not alter
23 the fact that traffic that traversed switched access arrangements was excluded
24 from the definition of Local Traffic. The parties agreed upon the language and
25 incorporated it into the Agreement.

Q. PLEASE DISCUSS THE CHANGE IN LANGUAGE THAT THE PARTIES NEGOTIATED.

A. BellSouth originally proposed that the exclusion language read "except for those calls that are originated or terminated through switched access arrangements as established by the ruling regulatory body." After discussion around what was meant by "the ruling regulatory body," the Parties modified the words to read "except for those calls that are originated or terminated through switched access arrangements as established by the State Commission or FCC." In the course of these discussions, the Parties discussed the fact that this reference was to the switched access arrangements that are offered for purchase through each Party's switched access tariffs, which are approved by the State Commission (for intrastate switched access) or the FCC (for interstate switched access).

Q. WAS IT THE INTENT OF THE PARTIES TO INCLUDE AS LOCAL TRAFFIC MINUTES THAT ORIGINATED OR TERMINATED THROUGH SWITHCED ACCESS ARRANGEMENTS?

A. Absolutely not. The exclusion was specifically written in order to exclude from the definition of local traffic calls that are considered switched access under tariff. As stated above, we had extensive discussion about the exclusion of traffic that originated or terminated through switched access arrangements. In the course of those discussions, we drew diagrams on the whiteboard and specifically discussed the calls that traversed switched access arrangements and the fact that they would

be expressly excluded from the definition of Local Traffic. I was very surprised when AT&T informed BellSouth after the parties began operating under the Agreement of AT&T's position on the definition of local traffic, since we had had specific discussions about the exclusion.

Q. DOES BELLSOUTH HAVE THIS SAME DEFINITION OF LOCAL TRAFFIC IN INTERCONNECTION AGREEMENTS WITH OTHER CLPS?

A. Yes. BellSouth has multiple interconnection agreements with CLPs that contain the LATA wide definition of local traffic and corresponding exclusion for switched access arrangements.

Q. HAS ANY OTHER CLP TAKEN THE POSITION THAT AT&T IS TAKING IN THIS CASE REGARDING ITS INTERPRETATION OF THIS LANGUAGE?

A. No.

Q. DOES THE EXCLUSION IN THE DEFINITION OF LOCAL TRAFFIC REFERENCE SWITCHED ACCESS TRAFFIC AS DEFINED IN SECTION 5.3.3 OF THE INTERCONNECTION AGREEMENT AS MR. KING CLAIMS ON PAGE 8?

A. No. Mr. King incorrectly states that the exclusion in the local traffic definition is of Switched Access Traffic as defined in Section 5.3.3 of the Interconnection

Agreement. If that were true, the exclusion would state "Switched Access Traffic as defined in Section 5.3.3." Instead, it specifically states that the exclusion is for calls that are "originated or terminated through switched access arrangements." The term switched access arrangements is not the same as the term Switched Access Traffic, and if the Parties intended for the exclusion to reference Section 5.3.3, the reference would have been included.

Further, Mr. King's theory is not logical. Under Mr. King's theory, the definition of Switched Access Traffic does not include any intraLATA traffic. However, the exclusion is specifically for a certain class of intraLATA traffic. Said another way, AT&T's position is that all calls in the LATA are local. If that were correct there would be no need for the exclusion. The language would simply state that all calls in the LATA are local.

Q. DOES BELLSOUTH HAVE AN INTERCONNECTION AGREEMENT WITH AT&T IN ANOTHER STATE THAT HAS A DEFINITION OF LOCAL TRAFFIC WHICH INCLUDES ALL TRAFFIC THAT ORIGINATES AND TERMINATES IN THE LATA?

A. Yes. In the agreement that governs the parties' relationship in Mississippi, BellSouth and AT&T agreed that all calls in the LATA would be considered local. Thus, the definition simply reads, "Local Traffic means any telephone call that originates and terminates in the same LATA." It does not have an exclusion for switched access calls.

Q. ON PAGE 11, MR. KING DISCUSSES THE FACT THAT SECTION 5.3.3 STATES THAT IT IS INTERRELATED TO SECTION 5.3.1. PLEASE EXPLAIN THE REASON THAT THIS STATEMENT WAS INCLUDED IN THE AGREEMENT.

A. The reference to the interrelationship between Section 5.3.1 and 5.3.3 is actually a result of language Mr. King omitted from his testimony. The entire Section 5.3.3 states:

> Switched Access Traffic is defined as telephone calls requiring local transmission or switching service for the purpose of the origination or termination of Intrastate InterLATA and Interstate InterLATA traffic. Switched Access Traffic includes, but is not limited to, the following types of traffic: Feature group A, Feature Group B, Feature Group D, toll free access (e.g. 800/877/888), 900 access, and their successors. Additionally, if BellSouth or AT&T is the other party's end user's presubscribed interexchange carrier or if an end user uses BellSouth or AT&T as an interexchange carrier on a 101XXXX basis, BellSouth or AT&T will charge the other party the appropriate tariff charges for originating switched access services. The Parties have been unable to agree as to whether Voice over Internet Protocol ("VOIP") transmissions which cross local calling area boundaries constitute Switched Access Traffic. Notwithstanding the foregoing, and without waiving any rights with respect to either Party's position as to the jurisdictional nature of VOIP,

> the Parties agree to abide by any effective and applicable FCC rules and orders regarding the nature of such traffic and the compensation payable by the Parties for such traffic, if any; provided however, that any VOIP transmission which originates in one LATA and terminates in another LATA (i.e, the end-to-end points of the call), shall not be compensated as Local Traffic. This Section is interrelated to Section 5.3.1.

The reference to the interrelationship was added as the Parties were negotiating mutually agreeable language to deal with Voice over Internet Protocol.

Q. DOES OTHER LANGUAGE IN ATTACHMENT 3 ADDRESS THE MIGRATION TO THIS NEW DEFINITION OF LOCAL TRAFFIC?

A. Yes. As stated earlier, the parties agreed that the definition of Local Traffic in the Second Interconnection Agreement was to be different from the definition of Local Traffic in the First Interconnection Agreement. Further, the definition in the Second Interconnection Agreement related to the type of arrangement, or trunk group, that the traffic originated over or terminated through. As such, the parties included a provision in the Interconnection Trunking and Routing section (Section 3) of Attachment 3 that addressed this conversion. Section 3.1 states:

> The Parties will convert all existing interconnection arrangements and trunks to the interconnection arrangements described in this Attachment in accordance with this following . . .

3 18

The Section then goes on to give technical specifications as well as process information about starting the conversion. Further, and of important note, are the trunking arrangements described in the interconnection agreement. Sections 3.3.1, 3.17.1, 3.18.1, 3.19.1, and 3.20.1 describe the trunking arrangements that are available via this interconnection agreement. The pages from these Sections are attached as exhibit ERAS-1. The descriptions of the trunking arrangements make clear that they are for local and intraLATA toll traffic, and the trunking arrangements are not the same as the switched access trunking arrangements set forth in BellSouth's tariffs. Further, there is no provision in the interconnection agreement allowing for the combination of switched access arrangements with the interconnection arrangements set forth in the interconnection agreement.

Q. ON PAGE 15, MR. KING STATES THAT THERE IS NOT ANY LANGUAGE IN THE INTERCONNECTION AGREEMENT PROVIDING FOR THE ENTITLEMENT TO CHARGE SWITCHED ACCESS RATES. IS THAT RELEVANT?

A. No. BellSouth's tariffs, which are approved by this Commission for intrastate access and by the FCC for interstate access, govern switched access arrangements purchased from them and the traffic flowing over such arrangements.

Q. ARE THE PROVISIONS IN THE INTERCONNECTION AGREEMENT ADDRESSING THE COMPENSATION OWED FOR TRAFFIC RECIPROCAL?

A. Yes. Section 5.3.1 of Attachment 3 of the Interconnection states:

> The Parties agree to apply a "LATAwide" local concept to this Attachment 3, meaning that traffic that has traditionally been treated as intraLATA toll traffic will now be treated as local for intercarrier compensation purposes, except for those calls that are originated or terminated through switched access arrangements as established by the State Commission or FCC.

This language is written reciprocally, and thus applies to each party. To the extent that BellSouth originated or terminated calls through switched access arrangements as defined in the tariff, such calls would be subject to switched access, and not reciprocal compensation, rates.

Q. DOES THAT CONCLUDE YOUR TESTIMONY?

A. Yes.

#473881

ATTACHMENT 3

LOCAL INTERCONNECTION

TABLE OF CONTENTS

1. NETWORK INTERCONNECTION 2
2. METHODS OF INTERCONNECTION 6
3. INTERCONNECTION TRUNKING AND ROUTING 9
5. NETWORK MAINTENANCE 24

EXHIBIT A

EXHIBIT B

EXHIBIT C

EXHIBIT D

EXHIBIT E

EXHIBIT F

3. INTERCONNECTION TRUNKING AND ROUTING

3.1 The Parties will convert all existing interconnection arrangements and trunks to the interconnection arrangements described in this Attachment in accordance with the following:

3.1.1 Within forty-five (45) days of either Party's written request, the Parties will mutually develop an operations plan based on sound engineering and operations principles, which will specify the guidelines to convert from the existing interconnection arrangements to the interconnection arrangements described in this Attachment 3. Such guidelines will conform to standard industry practices adopted by and contained in documents published by Industry Forums, including but not limited to, the Alliance for Telecommunications Industry Solutions ("ATIS") and the Ordering and Billing Forum ("OBF").

3.1.2 Each Party shall bear its own costs to convert from the existing interconnection arrangements to the interconnection arrangements described in this Attachment.

3.1.3 Unless otherwise mutually agreed, the Parties will complete the conversion within one (1) year of the Requesting Party's written request.

3.1.4 If, following one (1) year after the Requesting Party's written request, there exists any interconnection trunks which have not been converted to the interconnection arrangements described in this Attachment 3, then either Party may invoke the dispute resolution proceeding, pursuant to Section 16 of the General Terms and Conditions of this Agreement, incorporated herein by this reference.

3.2 The Parties will use the following interconnection standards:

3.2.1 The Parties agree to establish Binary 8 Zero Sum Extended Superframe line protocol, where technically feasible.

3.2.2 In those cases where either Party's equipment will not support 64K Clear Channel Capability ("CCC"), the Parties agree to establish AMI line coding. Any AMI line coding will be Superframe formatted. DS3 facilities will be provisioned with C-bit parity.

3.2.3 Where additional equipment is required, such equipment shall be obtained, engineered, and installed to support 64K CCC trunks.

3.2.4 All interconnection facilities between the Parties will be sized according to mutual forecasts developed per the requirements of Section 4.14 of this Attachment 3 and sound engineering practices.

3.2.5 Interconnection will be provided utilizing either a DS1 or DS3 interface or, with the mutual agreement of the Parties, another technically feasible interface (e.g., STS-1).

3.3 **Trunking Arrangements**

3.3.1 **Local Tandem Interconnection**. This interconnection arrangement allows AT&T to establish interconnection trunk group(s) at BellSouth local tandems for: (1) the delivery of AT&T-originated local traffic transported and terminated by BellSouth to BellSouth end offices within the local calling area as defined in BellSouth's General Subscriber Services Tariff, Section A3 served by those BellSouth local tandems; and (2) for local transit traffic transported by BellSouth for third party network providers who have also established an interconnection trunk group(s) at those BellSouth local tandems.

3.3.1.1 When a specified local calling area is served by more than one BellSouth local tandem, AT&T must designate a "home" local tandem for each of its assigned NPA/NXXs and establish trunk connections to such local tandems. Additionally, AT&T may choose to establish an interconnection trunk group(s) at the BellSouth local tandems where it has no codes homing but is not required to do so. AT&T may deliver local traffic to a "home" BellSouth local tandem that is destined for other BellSouth or third party network provider end offices subtending other BellSouth local tandems in the same local calling area where AT&T does not choose to establish an interconnection trunk group(s). It is AT&T's responsibility to enter its own NPA/NXX local tandem homing arrangements into the LERG either directly or via a vendor in order for other third party network providers to determine appropriate traffic routing to AT&T's codes. Likewise, AT&T shall obtain its routing information from the LERG.

3.3.1.2 Not withstanding establishing interconnection trunk group(s) to BellSouth's local tandems, AT&T must also establish an interconnection trunk group(s) to BellSouth access tandems within the LATA on which AT&T has NPA/NXX's homed for the delivery of Interexchange Carrier Switched Access ("SWA") and toll traffic, and traffic to Type 2A CMRS connections located at the access tandems. BellSouth cannot switch SWA traffic through more than one BellSouth access tandem. SWA, Type 2A CMRS or toll traffic routed to the local tandem in error will not be backhauled to the BellSouth access tandem for completion. (Type 2A CMRS interconnection is defined in BellSouth's General Subscriber Services Tariff, Section A35.)

3.15 The Parties agree to jointly manage the capacity of interconnection trunk groups to encourage the economic deployment of increasingly robust and diverse interconnection between their networks.

3.16 BellSouth Access Tandem Interconnection Architectures

3.16.1 BellSouth Access Tandem Interconnection provides intratandem access to subtending end offices. AT&T may choose which type of trunking architecture to use from the trunking architectures described in this Attachment 3. However, if both Parties' originated local and/or intraLATA toll traffic is utilizing the same two-way trunk group, the Parties shall mutually agree to use this type of two-way interconnection trunk group with the quantity of trunks being mutually determined and the provisioning being jointly coordinated. Furthermore, the IP(s) for two-way interconnection trunk groups transporting both Parties local and/or intraLATA toll shall be mutually agreed upon. AT&T shall order such two-way trunks via the Access Service Request ("ASR") process in place for Local Interconnection upon determination by the Parties, in a joint planning meeting, that such trunk groups shall be utilized. BellSouth will use the Trunk Group Service Request ("TGSR") to request changes in trunking. Both Parties reserve the right to issue ASRs, if so required, in the normal course of business. Furthermore, the Parties shall jointly review such trunk performance and forecasts on a periodic basis. The Parties use of two-way interconnection trunk groups for the transport of local and/or intraLATA toll traffic between the Parties does not preclude either Party from establishing additional one-way interconnection trunks for the delivery of its originated local and/or intraLATA toll traffic to the other Party. Any AT&T interconnection request that deviates from the interconnection trunk group architectures as described in this Agreement that affects traffic delivered to AT&T from a BellSouth switch that requires special BellSouth switch translations and other network modifications will require AT&T to submit a Bona Fide Request/New Business Request ("BFR/NBR") via the BFR/NBR Process set forth in this Agreement.

3.17 Standard Trunking Interconnection

3.17.1 In this interconnection architecture AT&T's originating Local and IntraLATA Toll and originating and terminating Transit Traffic is transported on a single two-way trunk group between AT&T and BellSouth access tandem(s) within a LATA. This group carries intratandem Transit Traffic between AT&T and Independent Companies, Interexchange Carriers, other CLECs and other network providers with which AT&T desires interconnection and has the proper contractual arrangements. This group also carries AT&T originated intertandem traffic transiting a single BellSouth access tandem destined to third party tandems such as an Independent Company

tandem or other CLEC tandem. BellSouth originated Local and IntraLATA Toll traffic is transported on a single one-way trunk group terminating to AT&T. The Two-way Trunking Rules, described in this Agreement, do not apply to this architecture. Other trunk groups for operator services, directory assistance, emergency services and intercept may be established if requested by AT&T. The LERG should be referenced for current routing and tandem serving arrangements. The Preferred Trunking Interconnection architecture is illustrated in Exhibit C.

3.18 One Way Trunking Interconnection

3.18.1 In this arrangement, the Parties interconnect using two one-way trunk groups. One one-way trunk group carries AT&T-originated local and intraLATA toll traffic destined for BellSouth end-users. The other one-way trunk group carries BellSouth-originated local and intraLATA toll traffic destined for AT&T end-users. A third two-way trunk group is established for AT&T's originating and terminating Transit Traffic. This group carries intratandem Transit Traffic between AT&T and Independent Companies, Interexchange Carriers, other CLECs and other network providers with which AT&T desires interconnection and has the proper contractual arrangements. This group also carries AT&T originated intertandem traffic transiting a single BellSouth access tandem destined to third party tandems such as an Independent Company tandem or other CLEC tandem. Other trunk groups for operator services, directory assistance, emergency services and intercept may be established if requested by AT&T. The LERG should be referenced for current routing and tandem serving arrangements. One Way Trunking Interconnection is illustrated in Exhibit D.

3.19 Two-Way Trunking Interconnection

3.19.1 Two-Way Trunking Interconnection establishes one two-way trunk group to carry local and intraLATA toll traffic between AT&T and BellSouth. To establish this type of configuration, AT&T and BellSouth must agree to the Two-way Trunking Rules. In addition, a two-way transit trunk group must be established for AT&T's originating and terminating Transit Traffic. This group carries intratandem Transit Traffic between AT&T and Independent Companies, Interexchange Carriers, other CLECs and other network providers with which AT&T desires interconnection and has the proper contractual arrangements. This group also carries AT&T originated intertandem traffic transiting a single BellSouth access tandem destined to third party tandems such as an Independent Company tandem or other CLEC tandem. Other trunk groups for operator services, directory assistance, emergency services and intercept may be established if requested by AT&T. The

LERG should be referenced for current routing and tandem serving arrangements. Two-Way Trunk Interconnection is illustrated in Exhibit E.

3.20 Supergroup Interconnection

3.20.1 In the Supergroup Interconnection arrangement, the Parties Local and IntraLATA Toll and AT&T's Transit Traffic is exchanged on a single two-way trunk group between AT&T and BellSouth. AT&T and BellSouth must agree to the Two-way Trunking Rules in order to establish this architecture. This group carries intratandem Transit Traffic between AT&T and Independent Companies, Interexchange Carriers, other CLECs and other network providers with which AT&T desires interconnection and has the proper contractual arrangements. This group also carries AT&T originated intertandem traffic transiting a single BellSouth access tandem destined to third party tandems such as an Independent Company tandem or other CLEC tandem. Other trunk groups for operator services, directory assistance, emergency services and intercept may be established if requested. The LERG should be referenced for current routing and tandem serving arrangements. Supergroup Interconnection is illustrated in Exhibit F.

3.21 BellSouth End Office Interconnection

3.21.1 AT&T may establish interconnection at BellSouth end offices for the delivery of AT&T originated local and intralata toll traffic destined for BellSouth end-users served by that end-office.

3.21.2 When end office trunking is ordered by BellSouth to deliver BellSouth originated traffic to AT&T, BellSouth will provide overflow routing through BellSouth tandems consistent with how BellSouth overflows it's traffic. The overflow will be based on the homing arrangements AT&T displays in the LERG. Likewise, if AT&T interconnects to a BellSouth end office for delivery of AT&T originated traffic, AT&T will overflow the traffic through the BellSouth tandems based on the BellSouth homing arrangements shown in the LERG.

3.21.3 The Parties shall utilize direct end office-to-end office trunk groups under the following conditions:

3.21.3.1 Tandem Exhaust - If a tandem through which the Parties are interconnected is unable to, or is forecasted to be unable to support additional traffic loads for any period of time, the Parties will mutually agree on an end office trunking plan that will alleviate the tandem capacity shortage and ensure completion of traffic between AT&T and BellSouth's subscribers.

Edward L. Rankin, III
General Counsel - North Carolina

BellSouth Telecommunications, Inc.
1521 BellSouth Plaza
P. O. Box 30188
Charlotte, North Carolina 28230
Telephone: 704-417-8833
Facsimile: 704-417-9389

January 2, 2003

FILED
JAN 0 2 2003
Clerk's Office
N.C. Utilities Commission

OFFICIAL COPY

Ms. Geneva S. Thigpen
Chief Clerk
North Carolina Utilities Commission
4325 Mail Service Center
Raleigh, NC 27699-4325

Re: Docket No. P-100, Sub 133d

Dear Ms. Thigpen:

I enclose for filing in the above-referenced docket the original and 31 copies of a Motion for Extension of Time. Please stamp the extra copy of this letter "Filed" and return it to me in the usual manner.

Thank you for your assistance in this matter.

Sincerely,

Edward L. Rankin, III cc

Edward L. Rankin, III

ELR/db
Enclosures

cc Parties of record

Clerk (dw)
AG T. Brown
7 Comm Gruber
Bennink Legal-3
Long Acct. 3
Sharpe Ecres. 2
Kite Comm. 3
Sessoms
Paschal
Kelly
[illegible]

327

BEFORE THE

NORTH CAROLINA UTILITIES COMMISSION

FILED
JAN 0 2 2003
Clerk's Office
N.C. Utilities Commission

In the Matter of:

Proceeding to Determine Permanent Pricing for Unbundled Network Elements	)))	Docket No. P-100, Sub 133d

MOTION FOR EXTENSION OF TIME

BellSouth Telecommunications, Inc. ("BellSouth"), AT&T Communications of the Southern States, LLC and MCI WorldCom Communications, Inc., by and through undersigned counsel, respectfully ask that the current due date for submission of briefs and/or proposed orders be extended from January 15, 2003 to January 31, 2003, and in support thereof, states as follows:

1. The current briefing deadline of January 15, 2003, was set by order dated November 22, 2002.

2. Due to work necessitated by various other matters as well as time lost due to holiday schedules, persons responsible for preparation and review of the requesting parties' post-hearing filings need additional time to prepare those matters. Moreover, the parties have not yet finalized their proposed issues matrix, as requested by the NCUC's November 22, 2002 Order.

3. The movants have consulted with counsel for the Public Staff and have learned that it has no objection to the requested extension.

THEREFORE, movants respectfully request that all parties be granted until January 31, 2003, to submit their briefs and/or proposed orders in this matter.

328

Respectfully submitted, this 2nd day of January, 2003.

BELLSOUTH TELECOMMUNICATIONS, INC.

Edward L. Rankin, III

Edward L. Rankin, III
1521 BellSouth Plaza
300 South Brevard Street
Charlotte, North Carolina 28202
(704) 417-8833

R. Douglas Lackey
Andrew D. Shore
4300 BellSouth Center
675 West Peachtree Street
Atlanta, Georgia 30375
(404) 335-0743

On behalf of:
BellSouth Telecommunications, Inc.
AT&T Communications of the Southern States, LLC
MCI WorldCom Communications, Inc.

CERTIFICATE OF SERVICE

I hereby certify that a true and correct copy of the foregoing was served on parties of record by US Mail this 2nd day of January, 2003.

Dorothy Blacher

474008

330

AGREEMENT

between

BellSouth Telecommunications, Inc.

and

AT&T Communications of the South Central States, Inc.

Effective Date:

MISSISSIPPI

EXHIBIT
AT&T 2

Alexander Gallo & Associates, Inc.

TABLE OF CONTENTS

Section	Page
AGREEMENT	4
PREFACE	4
RECITALS	4
DEFINITIONS and ACRONYMS	4
GENERAL TERMS AND CONDITIONS	5
1. Provision of Local Service and Unbundled Network Elements	5
2. Term of Agreement	6
3. Termination of Agreement; Transitional Support	6
4. Good Faith Performance	7
5. Option to Obtain Services and Elements and Combinations Under Other Agreements	7
6. Responsibility of Each Party	8
7. Governmental Compliance	8
8. Responsibility For Environmental Contamination	9
9. Regulatory Matters	11
10. Liability and Indemnity	12
11. Intellectual Property Rights and Indemnification	14
12. Audits and Inspections	17
13. Performance Measurement	18
14. Force Majeure	19
15. Certain Federal, State and Local Taxes	19
16. Dispute Resolution Process	23
17. Notices	24

18. Confidentiality and Proprietary Information 24

19. Branding 26

20. Directory Listings Requirements 27

21. Insurance Requirements 29

22. Costs 30

23. Disaster Recovery 31

24. Miscellaneous 31

25. Reservation of Rights 35

ATTACHMENTS

Attachment 1	Resale
Attachment 2	Unbundled Network Elements
Attachment 3	Local Interconnection
Attachment 4	Collocation
Attachment 5	Access to Numbers and Number Portability
Attachment 6	Connectivity Billing and Recording
Attachment 7	Interface Requirements for Ordering and Provisioning, Maintenance and Repair, and Pre-Ordering
Attachment 8	Rights of Way (ROW), Conduits, and Pole Attachments
Attachment 9	Performance Measures
Attachment 10	Bona Fide Request/New Business Request Process
Attachment 11	Acronyms
Attachment 12	Network Security
Attachment 13	BAPCO Agreement

AGREEMENT

PREFACE

This Agreement, which shall become effective as of the _____ day of _____, _____, is entered into by and between AT&T Communications of the South Central States, Inc., a Delaware corporation, on behalf of itself, having an office at 1200 Peachtree Street, N.E., Atlanta, Georgia, 30309, on behalf of itself and its Affiliates (individually and collectively "AT&T"), and BellSouth Telecommunications, Inc. ("BellSouth"), a Georgia corporation, having an office at 675 West Peachtree Street, Atlanta, Georgia 30375, on behalf of itself and its successors and assigns.

RECITALS

WHEREAS, The Telecommunications Act of 1996 (the "Act") was signed into law on February 8, 1996; and

WHEREAS, the Act places certain duties and obligations upon, and grants certain rights to Telecommunications Carriers; and

WHEREAS, BellSouth is an Incumbent Local Exchange Carrier; and

WHEREAS, AT&T is a Telecommunications Carrier and has requested that BellSouth negotiate an Agreement pursuant to the Act,

NOW, THEREFORE, in consideration of the promises and the mutual covenants of this Agreement, AT&T and BellSouth hereby agree as follows:

DEFINITIONS and ACRONYMS

For purposes of this Agreement, certain terms have been defined in the body of the Agreement to encompass meanings that may differ from, or be in addition to, the normal connotation of the defined word. Unless the context clearly indicates otherwise, any term defined or used in the singular shall include the plural. The words "shall" and "will" are used interchangeably throughout this Agreement and the use of either connotes a mandatory requirement. The use of one or the other shall not mean a different degree of right or obligation for either Party. A defined word intended to convey its special meaning is capitalized when used. Other terms that are capitalized, and not defined in this Agreement, shall have the meaning in the Act. For convenience of reference, Attachment 11 provides a list of acronyms used throughout this Agreement.

4.13.8 Major projects shall be limited to those projects that require the coordination and execution of multiple orders or related activities between and among BellSouth and AT&T work groups specifically relating to: (i) the initial establishment of local interconnection trunk groups; (ii) extending service into a new area; (iii) NXX code moves; (iv) facility grooming; or (v) network rearrangements. If orders that are component pieces of a major project are submitted after project implementation has been jointly planned and coordinated, they shall be submitted with a major project reference. Several orders submitted at one time may not be classified as a major project without the consent of the submitting Party. Each Party will identify a single point of contact that will be responsible for overall coordination and management of a major project through an agreed completion point.

4.13.9 As provided herein, AT&T and BellSouth agree to exchange escalation lists which reflect contact personnel including vice president level officers. These lists shall include name, department, title, phone number, and fax number for each person. AT&T and BellSouth agree to exchange an up-to-date list promptly following changes in personnel or information.

4.14 Interference or Impairment

4.14.1 Within three (3) business days of receipt of notification of blocking of traffic originated within the other Party's network, the Parties shall determine and begin work to implement reasonable corrective measures in a manner consistent with industry practices.

4.15 Local Dialing Parity

4.15.1 BellSouth and AT&T shall provide local and toll dialing parity to each other with no unreasonable dialing delays. Dialing parity shall be provided for all originating telecommunications services that require dialing to route a call. BellSouth and AT&T shall permit similarly situated telephone exchange service end users to dial the same number of digits to make a local telephone call notwithstanding the identity of the end user's or the called party's telecommunications service provider.

5. NETWORK MAINTENANCE

5.1 Outage Repair Standard

5.1.1 In the event of an outage or trouble in any arrangement, facility, or service being provided by BellSouth hereunder, BellSouth will follow procedures for isolating and clearing the outage or trouble that are no

less favorable than those that apply to comparable arrangements, facilities, or services being provided by BellSouth to itself, Affiliate or any other carrier whose network is connected to that of BellSouth.

5.2 BellSouth shall provide AT&T at least sixty (60) days' advance notice of any scheduled maintenance activity which may impact AT&T's end users. Scheduled maintenance shall include, without limitation, such activities as, switch software retrofits, power tests, major equipment replacements and cable rolls. Plans for scheduled maintenance shall include, at a minimum, the following information: location and type of facilities, specific work to be performed, date and time work is scheduled to commence, work schedule to be followed, date and time work is scheduled to be completed, estimated number of work-hours for completion.

6. INTERCONNECTION COMPENSATION

6.1 Compensation for Call Transportation and Termination for Local Traffic and Inter-Carrier Compensation for ISP-Bound Traffic

6.1.1 Local Traffic means any telephone call that originates and terminates in the same LATA.

6.1.2 The Parties will compensate each other on a mutual and reciprocal basis for the transport and termination of Local Traffic at the following rates:

04/08/00 – 12/31/00	$.00200 per MOU
01/01/01 – 12/31/01	$.00175 per MOU
01/01/02 – 12/31/02	$.00150 per MOU
01/01/03 – 04/07/03	The Parties will negotiate a rate for the exchange of traffic. If the Parties fail to negotiate a rate by 01/01/03 the applicable FCC or State Commission approved rates for local and ISP-bound traffic will apply.

6.1.2.1 The Parties recognize and agree that this Section will take effect on the effective Date of this Agreement and that they negotiated these annual rates together as a complete rate structure to apply over the full three-year term of this Agreement and that neither party would have agreed to accept a single annual rate in any single year.

6.1.3 The Parties have been unable to agree upon whether, pursuant to the FCC's February 26, 1999 Declaratory Ruling in Docket CC 96-98, dial

up calls to Internet Service Providers or Information Service Providers ("ISPs") should be considered Local Traffic for purposes of this Agreement. Dial-up Calls are defined as calls to an ISP that are dialed by using a local dialing pattern (7 or 10 digits) by the calling party (hereinafter referred to as "ISP-bound traffic"). However, without prejudice to either Party's position concerning the nature of ISP-bound traffic, the Parties agree for purposes of this Agreement only to compensate each other at the same per minute of use rates set forth in Paragraph 6.1.2 for ISP-bound traffic. It is expressly understood and agreed that this inter-carrier compensation mechanism for ISP-bound traffic is being established: (1) in consideration for a waiver and release by each party for any and all claims for reciprocal compensation for ISP-bound traffic exchanged between the parties prior to the Effective Date of this Agreement, which is hereby given; and (2) subject to the terms and conditions in section 6.1.4.

6.1.3.1 The Parties recognize and agree that the FCC, courts of competent jurisdiction, or state commissions with jurisdiction over the Parties will issue subsequent decisions on ISP-bound traffic ("Subsequent Decisions"). Notwithstanding any provision in this Agreement to the contrary, the inter-carrier compensation mechanism established in Section 6.1.3 shall continue at the rates set forth in section 6.1.2 for the full term of this Agreement without regard to such Subsequent Decisions, except as provided for in Section 6.1.3.2.

6.1.3.2 To the extent such Subsequent Decisions render the inter-carrier compensation mechanism for ISP-bound traffic set forth in section 6.1.3 in violation of applicable federal or state law, the Parties agree to amend this Agreement within thirty (30) days of the effective date of any such Subsequent Decision to conform the inter-carrier compensation mechanism set forth in section 6.1.3 with such Subsequent Decision. In the event of such an amendment, there will no true up for compensation paid prior to the amendment.

6.1.4 The Parties recognize and agree that the compensation for the transport and termination of Local Traffic set forth in section 6.1.2 and the inter-carrier compensation mechanism for ISP-bound traffic set forth in section 6.1.3 are intended to allow each Party to recover costs associated with such traffic. The Parties recognize and agree that such compensation will not be billed and shall not be paid for calls where a Party sets up a call, or colludes with a third party to set up a call, to the other Party's network for the purpose of receiving reciprocal compensation, and not for the purposes of providing a telecommunications service to an end user.

6.1.5 If AT&T utilizes a switch outside the LATA and BellSouth chooses to purchase dedicated or common (shared) transport from AT&T for transport and termination of BellSouth originated traffic, BellSouth will pay AT&T no more than the airline miles between the V & H coordinates of the Point of Interface within the LATA where AT&T receives the BellSouth-originated traffic and the V & H coordinates of the BellSouth Exchange Rate Center Area that the AT&T terminating NPA/NXX is associated in the same LATA. For these situations, BellSouth will compensate AT&T at either dedicated or common (shared) transport rates specified in Exhibit A and based upon the functions provided by AT&T as defined in this Attachment.

6.1.6 The origination and end point of the call shall determine the jurisdiction of the call. Unless expressly agreed to by the Parties in this Agreement, neither Party shall represent as local traffic any traffic for which access charges may be lawfully assessed. The Parties have been unable to agree as to whether a call that travels over transport protocol methods other than those being utilized by the Parties on the effective date of this Agreement and crosses LATA boundaries constitutes switched access traffic. However, because the Parties are not currently utilizing alternative transport protocol methods on the effective date of this Agreement, the Parties will resume negotiations on this issue if and when either Parties adopts a new transport protocol method. If the parties are unable to resolve this issue, then the Parties will submit the dispute to the Mississippi Public Service Commission or the Federal Communications Commission, whichever is appropriate, for resolution.

6.1.7 Billing Point of Interface Compensation. If BellSouth establishes a BPOI, AT&T agrees to pay to BellSouth Interoffice Dedicated Transport and any associated Multiplexing for BellSouth to transport BellSouth's originated Local and ISP-boundTraffic over BellSouth facilities from the BPOI as described in Section 1.8 of this Attachment to the Physical Point of Interface. Such Interoffice Dedicated Transport shall be priced as set forth in Exhibit A, pursuant to Section 3.5.7 of this Attachment. The Interoffice Dedicated Transport mileage shall be the airline mileage between the Vertical and Horizontal (V&H) coordinates of the BPOI and the V&H coordinates of the BellSouth Point of Interface.

6.1.8 Trunks and Facilities for Local and ISP-bound Traffic. Compensation for trunks and associated facilities for Local and ISP-bound traffic shall be handled in accordance with Section 1.9 of this Attachment.

6.2 Unidentifiable traffic. AT&T shall utilize its NPA/NXXs in such a way and will provide the necessary information so that BellSouth shall be

able to distinguish local from intraLATA toll traffic for BellSouth originated traffic. AT&T end users assigned NPA/NXX line numbers shall be physically located in the BellSouth rate center with which the NPA/NXX has been associated. Whenever BellSouth delivers traffic to AT&T for termination on the AT&T's network, if BellSouth cannot determine, because of the manner in which AT&T has utilized its NXX codes whether the traffic is local or toll, BellSouth will charge the applicable rates for originating intrastate network access service as reflected in BellSouth's Intrastate Access Services Tariff. BellSouth will make appropriate billing adjustments if AT&T can provide sufficient information for BellSouth to determine whether said traffic is local or toll.

6.3 Percent Local Use. Each Party will report to the other a Percentage Local Usage ("PLU"). The application of the PLU will determine the amount of local minutes to be billed to the other Party. For purposes of developing the PLU, each Party shall consider every local call and every long distance call, excluding intermediary traffic. BellSouth shall report quarterly PLU factors to AT&T. BellSouth will accept from AT&T monthly PLU factors provided under the previous agreement until the third quarter of 2001, at which time AT&T shall report quarterly PLU factors. BellSouth and AT&T shall also provide a positive report updating the PLU. Detailed requirements associated with PLU reporting shall be as set forth in BellSouth's Standard Percent Local Use Reporting Platform for Interconnection Purchasers, as it is amended from time to time during this Agreement. Notwithstanding the foregoing, where the terminating company has message recording technology that identifies the traffic terminated, such information, in lieu of the PLU factor, shall at the company's option be utilized to determine the appropriate reciprocal compensation to be paid.

6.4 Percent Local Facility. Each Party shall report to the other a Percent Local Facility ("PLF"). The application of the PLF will determine the portion of switched dedicated transport to be billed per the local jurisdiction rates. The PLF shall be applied to multiplexing, local channel and interoffice channel switched dedicated transport utilized in the provision of local interconnection trunks. Each Party shall update its PLF on the first of January, April, July and October of the year and shall send it to the other Party to be received no later than 30 calendar days after the first of each such month to be effective the first bill period the following month, respectively. Requirements associated with PLU and PLF calculation and reporting shall be as set forth in BellSouth's Percent Local Use/Percent Local Facility Reporting Guidebook, as it is amended from time to time.

7. PERCENTAGE INTERSTATE USAGE

7.1 Percentage Interstate Usage. For combined interstate and intrastate AT&T traffic terminated by BellSouth over the same facilities, AT&T will be required to provide a projected Percentage Interstate Usage ("PIU") to BellSouth. All jurisdictional report requirements, rules and regulations for Interexchange Carriers specified in BellSouth's Intrastate Access Services Tariff will apply to AT&T. After interstate and intrastate traffic percentages have been determined by use of PIU procedures, the PLU factor will be used for application and billing of local interconnection. Notwithstanding the foregoing, where the terminating company has message recording technology that identifies the traffic terminated, such information, in lieu of the PLU factor, shall at the company's option be utilized to determine the appropriate reciprocal compensation to be paid.

7.2 Audits. On thirty (30) days' written notice, each Party must provide the other the ability and opportunity to conduct an annual audit of the traffic reported. BellSouth and AT&T shall retain records of call detail for a minimum of nine months from which a PLU and/or PIU can be ascertained. The audit shall be accomplished during normal business hours at an office designated by the Party being audited. Audit requests shall not be submitted more frequently than one (1) time per calendar year. Audits shall be performed by a mutually acceptable independent auditor paid for by the Party requesting the audit. The PLU and/or PIU shall be adjusted based upon the audit results and shall apply to the usage for the quarter the audit was completed, to the usage for the quarter prior to the completion of the audit, and to the usage for the two quarters following the completion of the audit. If, as a result of an audit, either Party is found to have overstated the PLU and/or PIU by twenty percentage points (20%) or more, that Party shall reimburse the auditing Party for the cost of the audit.

7.3 Compensation for 800 Traffic. Each Party shall compensate the other pursuant to the appropriate switched access charges, including the database query charge as set forth in the each Party's intrastate or interstate switched access tariffs.

7.4 Records for 8YY Billing. Each Party will provide to the other the appropriate records necessary for billing intraLATA 8YY customers. Records required for billing end users purchasing 8YY Services shall be provided pursuant to Attachment 6 of this Agreement, incorporated herein by this reference.

7.5 Transit Traffic Service. BellSouth shall provide tandem switching and transport services for AT&T's transit traffic. Transit traffic is traffic originating on AT&T's network that is switched and/or transported by BellSouth and delivered to a third party's network, or traffic originating

on a third Party's network that is switched and/or transported by BellSouth and delivered to AT&T's network. Rates for local transit traffic shall be the applicable call transport and termination charges as set forth in Exhibit A to this Attachment. Rates for intraLATA toll and Switched Access transit traffic shall be the applicable call transport and termination charges as set forth in BellSouth Interstate or Intrastate Switched Access tariffs. Switched Access transit traffic presumes that AT&T's end office is subtending the BellSouth Access Tandem for switched access traffic to and from AT&T's end users utilizing BellSouth facilities, either by direct trunks with the IXC, or via the BellSouth Access Tandem. Billing associated with all transit traffic shall be pursuant to MECAB procedures. Wireless Type 1 traffic shall not be treated as transit traffic from a routing or billing perspective. Wireless Type 2A traffic shall not be treated as transit traffic from a routing or billing perspective until BellSouth and the Wireless carrier have the capability to properly meet-point-bill in accordance with Multiple Exchange Carrier Access Billing ("MECAB") guidelines.

8. OSS RATES

8.1 To the extent AT&T orders a Service and Element for the purpose of interconnection through the LSR process, the OSS Rates set forth in Exhibit A of Attachment 2, incorporated herein by this reference, shall apply.

F
APR 2 8 1997

AGREEMENT

between

BellSouth Telecommunications, Inc.

and

AT&T Communications of the Southern States, Inc.

Effective Date: April 28, 1997

NORTH CAROLINA

EXHIBIT
AT&T 3
Alexander Gallo & Associates, Inc

NC4/28/97

STATE OF NORTH CAROLINA
UTILITIES COMMISSION
RALEIGH

DOCKET NO. P-140, SUB 50

BEFORE THE NORTH CAROLINA UTILITIES COMMISSION

In the Matter of

Petition of AT&T Communications of the Southern States, Inc., for Arbitration of Interconnection with BellSouth Telecommunications, Inc.	) ORDER APPROVING) BELLSOUTH/AT&T INTER-) CONNECTION AGREEMENT

BY THE COMMISSION: An interconnection agreement between BellSouth Telecommunications, Inc. (BellSouth), and AT&T Communications of the Southern States, Inc. (AT&T), was filed for Commission review and approval on April 28, 1997.

The agreement was filed pursuant to the Order Ruling on Objections, Comments, Unresolved Issues, and Composite Agreement entered in this docket on April 11, 1997.

The Commission has reviewed the April 28, 1997, filing and notes the following:

1. With respect to the resale of semi-public payphone service as provided for in Part I, Paragraphs 25.12.5 and 25.12.6 of the agreement, the Commission notes that, pursuant to the FCC's Payphone Order, semi-public payphones are no longer offered to subscribers under tariff and thus should not be required to be offered for resale. BellSouth may, however, offer such semi-public payphone services for resale if it chooses.

2. With respect to the use of the word "interim" concerning resale prices in Part IV, Paragraph 42, the Commission directs that the word "interim" should be deleted because the resale prices are not interim prices.

After careful consideration, the Commission concludes that the agreement filed on April 28, 1997, between BellSouth and AT&T should be approved effective as of April 28, 1997, subject to the above modifications. BellSouth and AT&T shall take appropriate action, including contract amendments if necessary, to effectuate the above modifications.

IT IS, THEREFORE, SO ORDERED.

ISSUED BY ORDER OF THE COMMISSION.

This the 12th day of May, 1997.

NORTH CAROLINA UTILITIES COMMISSION

Geneva S. Thigpen

Geneva S. Thigpen, Chief Clerk

TABLE OF CONTENTS

Section	Page
AGREEMENT	1
PREFACE	1
RECITALS	1
DEFINITIONS and ACRONYMS	1
GENERAL TERMS AND CONDITIONS	2
1. Provision of Local Service and Unbundled Network Elements	2
2. Term of Agreement	4
3. Termination of Agreement; Transitional Support	4
4. Good Faith Performance	5
5. Option to Obtain Local Services, Network Elements and Combinations Under Other Agreements	5
6. Responsibility of Each Party	5
7. Governmental Compliance	6
8. Responsibility For Environmental Contamination	7
9. Regulatory Matters	7
10. Liability and Indemnity	8
11. Audits and Inspections	10
12. Performance Measurement	12
13. Customer Credit History	12
14. Force Majeure	12
15. Certain Federal, State and Local Taxes	13
16. Alternative Dispute Resolution	17
17. Notices	17

18. Confidentiality and Proprietary Information 18

19. Branding 19

20. Directory Listings Requirements 20

21. Subscriber List Information/Local Number Portability 21

22. Miscellaneous 24

Part I: Local Services Resale 28

23. Telecommunications Services Provided for Resale 28

24. General Terms and Conditions for Resale 29

25. Requirements for Specific Services 31

26. DELETED 37

27. Support Functions 37

28. Service Functions 40

PART II: UNBUNDLED NETWORK ELEMENTS 49

29. Introduction 49

30. Unbundled Network Elements 49

PART III: ANCILLARY FUNCTIONS 53

31. Introduction 53

32. BellSouth Provision of Ancillary Functions 53

33. Standards for Ancillary Functions 53

PART IV: PRICING 55

34. General Principles 55

35. Local Service Resale 55

36. Unbundled Network Elements 55

37. Compensation For Call and Transport Termination 55

38. Ancillary Functions 55

39. Local Number Portability 55

40. Recorded Usage Data 56

41. Electronic Interfaces 56

ATTACHMENTS

Attachment 1	Alternative Dispute Resolution
Attachment 2	Services Description: Unbundled Network Elements
Attachment 3	Service Description: Ancillary Functions
Attachment 4	Provisioning and Ordering
Attachment 5	Maintenance
Attachment 6	Connectivity Billing and Recording
Attachment 7	Provision of Customer Usage Data
Attachment 8	Local Number Portability
Attachment 9	Network Security
Attachment 10	Acronyms
Attachment 11	Definitions
Attachment 12	Performance Measurement
Attachment 13	BAPCO Agreement
Attachment 14	Bona Fide Request Process
Attachment 15	Interface Requirements for Ordering and Provisioning, Maintenance and Repair, and P[illegible] Ordering

AGREEMENT

PREFACE

This Agreement, which shall become effective as of the 28th day of April, 1997, is entered into by and between AT&T Communications of the Southern States, Inc., a New York Corporation, having an office at 1200 Peachtree Street, N.E., Atlanta, Georgia 30309, on behalf of itself, its successors and assigns (individually and collectively "AT&T"), and BellSouth Telecommunications, Inc. ("BellSouth"), a Georgia corporation, on behalf of itself, its successors and assigns, having an office at 675 West Peachtree Street, Atlanta, Georgia 30375.

RECITALS

WHEREAS, The Telecommunications Act of 1996 (the "Act") was signed into law on February 8, 1996; and

WHEREAS, the Act places certain duties and obligations upon, and grants certain rights to Telecommunications Carriers; and

WHEREAS, BellSouth is an Incumbent Local Exchange Carrier; and

WHEREAS, BellSouth is willing to provide Telecommunications Services for resale, Interconnection, Unbundled Network Elements and Ancillary Functions which include, but are not limited to, access to poles, ducts, conduits and rights-of-way, and collocation of equipment at BellSouth's Premises on the terms and subject to the conditions of this Agreement; and

WHEREAS, AT&T is a Telecommunications Carrier and has requested that BellSouth negotiate an Agreement with AT&T for the provision of Interconnection, Unbundled Network Elements, and Ancillary Functions as well as Telecommunications Services for resale, pursuant to the Act and in conformance with BellSouth's duties under the Act,

NOW, THEREFORE, in consideration of the promises and the mutual covenants of this Agreement, AT&T and BellSouth hereby agree as follows:

DEFINITIONS and ACRONYMS

For purposes of this Agreement, certain terms have been defined in Attachment 11 and elsewhere in this Agreement to encompass meanings that may differ from, or be in addition to, the normal connotation of the defined word. Unless the context clearly indicates otherwise, any term defined or used

indented).

"E911 Service" is a method of routing 911 calls to a PSAP that uses customer location data in the ALI/DMS to determine the PSAP to which a call should be routed.

"Filing" has the meaning set forth in Section 9.2 of the General Terms and Conditions.

"Follow-on Agreement" has the meaning set forth in Section 2.2 of the General Terms and Conditions.

"Governmental Authority" means any federal, state, local, foreign or international court, government, department, Commission, board, bureau, agency, official, or other regulatory, administrative, legislative or judicial authority with jurisdiction.

"Hazardous Materials" means any hazardous or toxic substance, material or waste listed in the United States Department of Transportation HAZARDOUS MATERIALS Table at 49 CFR 172.101; any hazardous substance listed by the Environmental Protection Agency (EPA) under the Comprehensive Environmental, Response, Compensation, and Liability Act (CERCLA), 42 U.S.C. §§ 9601 et. seq., as amended, and found at 40 CFR Part 302; any hazardous waste listed under the Resource Conservation and Recovery Act (RCRA), 42 U.S.C. §§ 6901 et. seq., as amended, and found at 40 CFR Part 261; any toxic substance regulated by the Toxic Substances Control Act, 15 U.S.C. §§ 2601 et. seq., as amended; any insecticide, fungicide, or rodenticide regulated by the Federal Insecticide, Fungicide, and Rodenticide Act, 7 U.S.C. §§ 136 et. seq.; and the following specified substances or materials, that may or may not be regulated by the above: (1) asbestos or asbestos-containing materials; (2) petroleum or petroleum-based or derived products or by-products; (3) polychlorinated biphenyls (PCBs); and (4) radon.

"Interconnection" is as described in the Act and refers to the linking of two or more telecommunications networks for the purpose of terminating local telephone calls.

"Interim Number Portability (INP)" is as described in the Act and means the delivery of LNP capabilities, from a customer standpoint in terms of call completion, with as little impairment of functioning, quality, reliability, and convenience as possible and from a carrier standpoint in terms of compensation, through the use of existing and available call routing, forwarding, and addressing capabilities.

"Line Information Data Base(s) (LIDB)" means one or all, as the context may require, of the Line Information Databases owned individually by ILECs and other entities which provide, among other things, calling card validation functionality for telephone line number cards issued by ILECs and other entities. A LIDB also contains validation data for collect and third number-billed calls, which include billed number screening.

"Local Exchange Carrier" is as defined in the Act.

"Local Number Portability (LNP)" means Interim Number Portability (INP) or Permanent Number Portability (PNP).

"Local Number Portability Database" supplies routing numbers for calls involving numbers that have been ported from one local service provider to another and is further defined in Attachment 2, Section 13.3.1.

"Local Service" has the meaning set forth in Section 1 of the General Terms and Conditions.

"Local Switching" has the meaning set forth in Attachment 2, Section 7.1.

"Local Traffic" - means any telephone call that originates and terminates in the same LATA and is billed by the originating Party as a local call, including any call terminating in an exchange outside of BellSouth's service area with respect to which BellSouth has a local interconnection agreement with an independent LEC, with which AT&T is not directly interconnected.

"Loop" or "Loop Combination" has the meaning set forth in Attachment 2, Section 2.1.1.

"Loop Concentrator/Multiplexer" has the meaning set forth in Attachment 2, Section 5.1..

"Loop Distribution" has the meaning set forth in Attachment 2, Section 4.

"Loop Feeder" has the meaning set forth in Attachment 2, Section 6.1.1.

"MECAB" means the Multiple Exchange Carrier Access Billing document prepared under the direction the Billing Committee of the OBF. The Multiple Exchange Carrier Access Billing document, published by Bellcore as Special Report SR-BDS-000983, contains the recommended guidelines for the billing of access and other connectivity services provided by two or more LECs (including LECs and CLECs), or by one LEC or CLEC in two or more states within a single LATA.

Exh. 4

SECOND AMENDMENT
TO THE
INTERCONNECTION AGREEMENT BETWEEN
AT&T COMMUNICATIONS OF THE SOUTHERN STATES, INC.
AND
BELLSOUTH TELECOMMUNICATIONS, INC.
FOR THE STATE OF NORTH CAROLINA
DATED JULY 19, 2001

Pursuant to this Agreement, ("Amendment") AT&T Communications of the Southern States, Inc. ("AT&T") and BellSouth Telecommunications, Inc. ("BellSouth"), hereinafter referred to collectively as the "Parties," hereby agree to amend that certain Interconnection Agreement between the Parties dated July 19, 2001 ("Interconnection Agreement").

NOW THEREFORE, in consideration of the mutual provisions contained herein and other good and valuable consideration, the receipt and sufficiency of which are hereby acknowledged, the Parties hereby covenant and agree as follows:

Pursuant to this Amendment, the Parties hereby agree to amend the Interconnection Agreement to reflect the following:

1. The Parties agree to delete Section 5.3 of Attachment 3 in its entirety and replace it with the provisions set forth in Exhibit 1 of this Amendment, attached hereto and incorporated herein by this reference.

2. The Parties agree to delete Exhibit A of Attachment 3 in its entirety and replace it with a new Exhibit A, set forth in Exhibit 2 of this Amendment, attached hereto and incorporated herein by this reference.

3. The Parties agree to delete Section 3.7.4 of Attachment 2 in its entirety and replace it with the following provision:

   3.7.4 AT&T or BellSouth ("Petitioner") shall notify the other Party ("Respondent") in writing via AT&T's Local Services and Access Management ("LSAM") Group or BellSouth's AT&T Account Team ("Account Team") of the needed areas of improvement and any proposed changes to the current hot cut process provided for in the Interconnection Agreement ("Agreement").

EXHIBIT
AT&T 4

Alexander Galloway Associates, Inc.

3.7.4.1 The Respondent shall submit a written response to Petitioner within fifteen (15) calendar days of the requested change.

3.7.4.2 Upon receipt of the response, Petitioner shall either:

3.7.4.2.1 schedule a meeting between representatives of each party with authority to identify areas of improvement and, if applicable, to develop and implement process changes resulting from such mutual cooperation; or

3.7.4.2.2 accept all proposed changes by Respondent, if any, and notify Respondent with a written response within seven (7) calendar days that the changes, if any, will be accepted.

3.7.4.3 If Section 3.7.4.2.1 is implemented, the Parties agree to negotiate the requested change in good faith within ninety (90) calendar days of the day Petitioner requested the proposed change.

3.7.4.4 A mutually agreed upon process under either Section 3.7.4.2.1 or Section 3.7.4.2.2 shall be implemented upon a mutually agreed upon timeframe.

3.7.4.5 Should the Parties be unable to agree on a mutually acceptable change to the process and or an agreeable date to implement such change within one hundred and twenty (120) days of the day Petitioner requested the proposed change, the Parties agree to resolve any disputes in accordance with the dispute resolution process provided in Section 16 of the General Terms and Conditions of this Agreement.

3.7.4.6 At no such time, shall either Party waive any rights that it may have with respect to the Agreement in its entirety.

3.7.4.7 Nothing in this Process Improvement Plan is deemed to amend or modify any other terms in the Interconnection Agreement.

4. The Parties agree to add provisions consistent with the FCC's 4th Report and Order, dated August 8, 2000, to delete Attachment 4 –Collocation and replace in its entirety with a new Attachment 4 –Collocation, attached hereto as Exhibit 3 and incorporated herein by reference. Except as otherwise set forth herein, the original Exhibits to Attachment 4 are unaffected by this Amendment and shall remain in full force and effect.

5. The Parties further agree to make the following revisions to Attachment 4-Collocation Rates Exhibit B, attached herein as Exhibit 4:

   A. Delete the Co-Carrier cross connect rates and replace it with the rates set forth in Exhibit 4 to this Amendment, attached hereto and incorporated herein by reference.

   B. Delete the USOC description and abbreviation of PE1PL for -48V DC power and replace with the new USOC description and abbreviation of PE1FJ for the –48V DC power as set forth in Exhibit 4 to this Amendment, attached hereto and incorporated herein by reference.

   C. Delete the USOC description and abbreviation of XXXX for -48V DC power and replace with the new USOC description and abbreviation of PE1PL for the –48V DC power as set forth in Exhibit 4 to this Amendment, attached hereto and incorporated herein by reference.

6. AT&T has changed the name of said business to AT&T Communications of the Southern States, LLC.

7. The Parties agree the name of AT&T Communications of the Southern States, Inc. is hereby deleted throughout the Interconnection Agreement and replace it with AT&T Communications of the Southern States, LLC ("AT&T").

8. All of the other provisions of the Interconnection Agreement, dated July 19, 2001, shall remain in full force and effect.

9. Either or both of the Parties is authorized to submit this Amendment to the respective Public Service Commission for approval subject to Section 252(e) of the Federal Telecommunications Act of 1996.

IN WITNESS WHEREOF, the Parties hereto have caused this Amendment to be executed by their respective duly authorized representatives on the date indicated below.

AT&T Communications of the Southern States, Inc.	**BellSouth Telecommunications, Inc.**
By: _____	By: _____
Name: _____	Name: _____
Title: _____	Title: _____
Date: _____	Date: _____

IN WITNESS WHEREOF, the Parties hereto have caused this Amendment to be executed by their respective duly authorized representatives on the date indicated below.

AT&T Communications of the Southern States, Inc.	BellSouth Telecommunications, Inc.
By: Bill C. Peacock	By:
Name: Bill C. Peacock	Name: Jerry Hendrix
Title: Director - Local Services & Access Management	Title: AVP Interconnection Svcs. Mktg.
Date: 4-18-02	Date: 4/18/02

5.3 **Interconnection Compensation**

5.3.1 **Intercarrier Compensation for Call Transport and Termination of Local and ISP-bound Traffic**

5.3.1.1 The Parties agree to apply a "LATAwide" local concept to this Attachment 3, meaning that traffic that has traditionally been treated as intraLATA toll traffic will now be treated as local for intercarrier compensation purposes, except for those calls that are originated or terminated through switched access arrangements as established by the State Commission or FCC. Nothing in this Agreement shall be construed in any way to constrain either Party's choices regarding the size of the local calling areas that it may establish for its end users.

5.3.1.2 The Parties recognize and agree that the compensation for the transport and termination of Local Traffic is intended to allow each Party to recover costs associated with such traffic. The Parties recognize and agree that such compensation will not be billed and shall not be paid for calls where a Party sets up a call, or colludes with a third party to set up a call, to the other Party's network for the purpose of receiving reciprocal compensation, and not for the purposes of providing a telecommunications service to an end user.

5.3.2 ISP-bound Traffic is defined as calls to an information service provider or Internet service provider ("ISP") that are dialed by using a local dialing pattern (7 or 10 digits) by a calling party in one LATA to an ISP server or modem in the same LATA and is a subset of "information access". Information access is defined as the provision of specialized exchange telecommunications services in connection with the origination, termination, transmission, switching, forwarding or routing of telecommunications traffic to or from the facilities of a provider of information services. ISP-bound Traffic is not Local Traffic or IP Telephony as set forth in 5.3.10 of this agreement subject to reciprocal compensation, but instead is information access traffic subject to the FCC's jurisdiction. Notwithstanding the definitions of Local Traffic and ISP-bound traffic above, and pursuant to the FCC's Order on Remand and Report and Order in CC Docket 99-68 released April 27, 2001 ("ISP Order on Remand"), BellSouth and AT&T agree to the rebuttable presumption that all combined circuit switched Local and ISP-bound Traffic delivered to BellSouth or AT&T that exceeds a 3:1 ratio of terminating to originating traffic on a statewide basis shall be considered ISP-bound traffic for compensation purposes. BellSouth and AT&T further agree to the rebuttable presumption that all combined circuit switched Local and ISP-bound Traffic delivered to BellSouth or AT&T that does not exceed a 3:1 ratio of terminating to originating traffic on a statewide basis shall be considered Local Traffic for compensation purposes.

Exhibit 1

5.3.3	All Local and ISP Traffic that is exchanged pursuant to this Agreement shall be compensated as follows:
5.3.3.1	Commencing on July 1, 2001 and continuing until December 31, 2001, $.0015 per minute of use.
5.3.3.2	Commencing on January 1, 2002 and continuing until June 30, 2003, $.0010 per minute of use.
5.3.3.3	Commencing on July 1, 2003 and continuing until June 30, 2004, or until further FCC action (whichever is later), $.0007 per minute of use.
5.3.3.4	No other per MOU charges shall apply to the carriage of Local and ISP Traffic by either Party for the other Party except as set forth above. Compensation for Transit Traffic shall be as set forth in Section 5.3.20.

5.3.4 The ability of either Party to collect a credit for intercarrier compensation paid for ISP Traffic, as described in section 5.3.5, following, shall be limited as follows based on "growth caps" on compensation for ISP Traffic ordered by the FCC. The Parties shall first determine the total number of minutes of use of ISP Traffic (as defined in this Agreement) terminated by one Party for the other Party for the three-month period commencing January 1, 2001 and ending March 31, 2001. The Parties shall then multiply this number of minutes by 4.4, and the resulting product shall be the terminating Party's "2001 ISP Annualized Traffic Cap." The total number of minutes of use of ISP Traffic for which one Party may receive compensation from the other Party during the period July 1, 2001 through December 31, 2001 shall equal 50% of that Party's 2001 ISP annualized traffic cap, due to the Parties' mid-year one-time compensation payment. The total number of minutes of use of ISP Traffic for which one Party may receive compensation from the other Party during the period January 1, 2002 through December 31, 2002 or for any calendar year thereafter shall equal 1.1 times that Party's 2001 ISP Annualized Traffic Cap.

5.3.5 For the period commencing July 1, 2001, each party will bill the other for all minutes of use specified in 5.3.3, above. The parties will meet in February 2002 on a trial basis to determine if annual meetings are sufficient for determining the number of ISP-bound minutes. If such trial proves successful, the parties will meet each succeeding February, thereafter, for the duration of this Agreement to determine the number of ISP-bound minutes and there will be no need to amend this Agreement. If the trial proves unsuccessful, no later than June 2002, the parties will develop a subsequent process and amend this Agreement Intercarrier Compensation paid for any ISP-bound minutes of use that exceeds the caps described in 5.3.4, above, will be credited to that party in the March bill. At this same meeting, the Parties will reach agreement on the ISP-bound minutes of use cap for the next time period.

5.3.6 For the purposes of this Attachment 3, Common (Shared) Transport is defined as the transport of one Party's traffic by the other Party over the other Party's common (shared) facilities between the other Party's tandem switch and end office switch and/or between the other Party's tandem switches.

5.3.7 For the purposes of this Attachment 3, Tandem Switching is defined as the function that establishes a communications path between two switching offices through a third switching office (the Tandem switch).

5.3.8 For the purposes of this Attachment 3, End Office Switching is defined as the function that establishes a communications path between the trunk side and line side of the End Office switch.

5.3.9 In the event that AT&T elects to offer service within a LATA using a switch located in another LATA, AT&T agrees to provide the transport for

both Parties' traffic between the remote AT&T switch and a point (i.e., a facility point of presence) within the LATA in which AT&T offers service. Such facility point of presence shall be deemed to be an AT&T switch for the purposes of this Attachment.

5.3.10 Switched Access Traffic. Switched Access Traffic is defined as telephone calls requiring local transmission or switching services for the purpose of the origination or termination of Intrastate InterLATA and Interstate InterLATA traffic. Switched Access Traffic includes, but is not limited to, the following types of traffic: Feature Group A, Feature Group B, Feature Group D, toll free access (e.g., 800/877/888), 900 access, and their successors. Additionally, If BellSouth or AT&T is the other Party's end user's presubscribed interexchange carrier or if an end user uses BellSouth or AT&T as an interexchange carrier on a 101XXXX basis, BellSouth or AT&T will charge the other Party the appropriate tariff charges for originating switched access services. The Parties have been unable to agree as to whether Voice over Internet Protocol ("VOIP") transmissions which cross local calling area boundaries constitute Switched Access Traffic. Notwithstanding the foregoing, and without waiving any rights with respect to either Party's position as to the jurisdictional nature of VOIP, the Parties agree to abide by any effective and applicable FCC rules and orders regarding the nature of such traffic and the compensation payable by the Parties for such traffic, if any; provided however, that any VOIP transmission which originates in one LATA and terminates in another LATA (i.e., the end-to-end points of the call), shall not be compensated as Local Traffic. This Section is interrelated to Section 5.3.1.1.

5.3.11 The Parties have been unable to agree as to the appropriate compensation for calls which originate in a LATA and terminate to a physical location outside of that LATA but to a number assigned to a rate center within that LATA. However, without prejudice to either Party's position concerning the application of reciprocal compensation or access charges to such traffic, the Parties agree for purposes of this Agreement only and subject to the Parties' agreement to the terms of Sections 5.3.1.1 and 5.3.3, and on an interim basis until the FCC issues an Order addressing this issue, neither Party shall bill the other reciprocal compensation, intercarrier compensation or switched access in connection with the exchange of any traffic as described in the first sentence of this paragraph. Once the FCC issues an Effective Order addressing this issue, the Parties agree to amend this Interconnection Agreement to comply with the Order on a prospective basis only within thirty (30) days of either Party's written request. No "true-up" shall be required in connection with such an Effective Order. Nothing in this Section 5.3.4 is intended to change the way that the Parties treat ISP-bound traffic in accordance with the FCC's ISP Order on Remand.

5.3.12 Billing Point of Interface Compensation. If BellSouth establishes a BPOI, AT&T agrees to pay to BellSouth Interoffice Dedicated Transport and any associated Multiplexing for BellSouth to transport BellSouth's originated Local and ISP-bound Traffic over BellSouth facilities from the BPOI as described in Section 1.8.3 of this Attachment to the Physical Point of Interface. Such Interoffice Dedicated Transport shall be priced as set forth in Exhibit A. The Interoffice Dedicated Transport mileage shall be the airline mileage between the Vertical and Horizontal ("V&H") coordinates of the BPOI and the V&H coordinates of the BellSouth Point of Interface. The Interoffice Dedicated Transport charges for BPOI shall be billed based on the actual volume of traffic in increments of 8.9M minutes, which is a DS3 equivalent. BellSouth will not assess charges for an additional DS3 until the additional 8.9M-minute threshold is met.

5.3.13 Charges for Trunks and Associated Dedicated Facilities. Compensation for trunks and associated dedicated facilities shall be handled in accordance with Section 1.9-1.9.2 of this Attachment.

5.3.14 Percent Local Use. Each Party will report to the other a Percentage Local Usage ("PLU"). The application of the PLU will determine the amount of local minutes to be billed to the other Party. For purposes of developing the PLU, each Party shall consider every local call and every long distance call, excluding intermediary traffic. BellSouth shall report quarterly PLU factors to AT&T. BellSouth will accept from AT&T monthly PLU factors provided under the previous agreement until the third quarter of 2001, at which time AT&T shall report quarterly PLU factors. BellSouth and AT&T shall also provide a positive report updating the PLU. Detailed requirements associated with PLU reporting shall be as set forth in BellSouth's Standard Percent Local Use Reporting Platform for Interconnection Purchasers, as it is amended from time to time during this Agreement. Notwithstanding the foregoing, where the terminating company has message recording technology that identifies the traffic terminated, such information, in lieu of the PLU factor, shall at the company's option be utilized to determine the appropriate reciprocal compensation to be paid.

5.3.15 Percent Local Facility. Each Party shall report to the other a PLF. The application of the PLF will determine the portion of switched dedicated transport to be billed per the local jurisdiction rates. The PLF shall be applied to multiplexing, local channel and interoffice channel switched dedicated transport utilized in the provision of local interconnection trunks. Each Party shall update its PLF on the first of January, April, July and October of the year and shall send it to the other Party to be received no later than thirty (30) calendar days after the first of each such month to be effective the first bill period the following month, respectively. Requirements associated with PLU and PLF calculation and reporting shall be as set forth in BellSouth's Percent Local Use/Percent Local Facility Reporting Guidebook, as it is amended from time to time.

5.3.16 Percentage Interstate Usage. For combined interstate and intrastate AT&T traffic terminated by BellSouth over the same facilities, AT&T will be required to provide a projected Percentage Interstate Usage ("PIU") to BellSouth. All jurisdictional report requirements, rules and regulations for Interexchange Carriers specified in BellSouth's Intrastate Access Services Tariff will apply to AT&T. After interstate and intrastate traffic percentages have been determined by use of PIU procedures, the PLU factor will be used for application and billing of local interconnection. Notwithstanding the foregoing, where the terminating company has message recording technology that identifies the traffic terminated, such information, in lieu of the PLU factor, shall at the company's option be utilized to determine the appropriate reciprocal compensation to be paid.

5.3.17 Audits. On thirty (30) days' written notice, each Party must provide the other the ability and opportunity to conduct an annual audit of the traffic reported. BellSouth and AT&T shall retain records of call detail for a minimum of nine months from which a PLU and/or PIU can be ascertained. The audit shall be accomplished during normal business hours at an office designated by the Party being audited. Audit requests shall not be submitted more frequently than one (1) time per calendar year. Audits shall be performed by a mutually acceptable independent auditor paid for by the Party requesting the audit. The PLU and/or PIU shall be adjusted based upon the audit results and shall apply to the usage for the quarter the audit was completed, to the usage for the quarter prior to the completion of the audit, and to the usage for the two quarters following the completion of the audit. If, as a result of an audit, either Party is found to have overstated the PLU and/or PIU by twenty percentage points (20%) or more, that Party shall reimburse the auditing Party for the cost of the audit.

5.3.18 Compensation for 800 Traffic. Each Party shall compensate the other pursuant to the appropriate switched access charges, including the database query charge as set forth in the each Party's intrastate or interstate switched access tariffs.

5.3.19 Records for 8YY Billing. Each Party will provide to the other the appropriate records necessary for billing intraLATA 8YY customers. Records required for billing end users purchasing 8YY Services shall be provided pursuant to Attachment 6 of this Agreement, incorporated herein by this reference.

5.3.20 Transit Traffic Service. BellSouth shall provide tandem switching and transport services for AT&T's transit traffic. Transit traffic is traffic originating on AT&T's network that is switched and/or transported by BellSouth and delivered to a third party's network, or traffic originating on a third Party's network that is switched and/or transported by BellSouth and delivered to AT&T's network. Transit traffic consists of local transit traffic and Switched Access transit traffic. Rates for local transit traffic

shall be the applicable call transport and termination charges as set forth in Exhibit A to this Attachment. Switched Access transit traffic shall be meet-point billed in accordance with the BellSouth Interstate or Intrastate Switched Access tariffs. Switched Access transit traffic presumes that AT&T's end office is subtending the BellSouth Access Tandem for switched access traffic to and from AT&T's end users utilizing BellSouth facilities, either by direct trunks with the IXC, or via the BellSouth Access Tandem. Billing associated with all transit traffic shall be pursuant to MECAB procedures. Wireless Type 1 traffic shall not be treated as transit traffic from a routing or billing perspective. Wireless Type 2A traffic shall not be treated as transit traffic from a routing or billing perspective until BellSouth and the Wireless carrier have the capability to properly meet-point-bill in accordance with Multiple Exchange Carrier Access Billing ("MECAB") guidelines. Transit traffic does not include traffic originating from or terminating to AT&T end-users utilizing resold BellSouth services.

EXHIBIT NO. 3

DOCKET NO.: 020919-TP

WITNESS: STIP-3

PARTY: AT&T

DESCRIPTION:

1. AT&T Responses to BellSouth's 1st Interrogatories, Nos. 2 & 3, p. 1

PROFFERING PARTY: STAFF

I.D. # Stip-3

FLORIDA PUBLIC SERVICE COMMISSION
DOCKET NO. 020919-TP EXHIBIT NO 3
COMPANY/ WITNESS. AT+T - Stip-3
DATE: 5-07-03

INTERROGATORY 2: (a) Does AT&T contend that it told BellSouth before the parties executed the Interconnection Agreement that AT&T believed that the definition of "local traffic" as set forth in section 5.3.1.1 of Attachment 3 was in any way limited by or impacted by the definition of "Switched Access Traffic" in section 5.3.3 of Attachment 3? (b) If so, provide the dates of such communication(s), the form of the communications(s), the person(s) from AT&T that made the communication(s), and the person(s) at BellSouth that received the communications(s).

RESPONSE:

(A) Yes.

(B) According to the "red-lined" versions of the interconnection agreement and accompanying emails received from BellSouth in discovery in this proceeding, BellSouth proposed a definition of "Switched Access Traffic" to AT&T on July 11, 2001. Thereafter, during the period from July 11, 2001 through July 19, 2001, the Parties had various discussions regarding both Sections 5.3.1.1 and 5.3.3. It was during these discussions that AT&T's Bill Peacock told BellSouth's Beth Shiroishi and Michael Willis that AT&T believed that the definition of "local traffic" as set forth in section 5.3.1.1 of Attachment 3 was impacted by the definition of "Switched Access Traffic" in section 5.3.3 of Attachment 3. The Parties agreed to both Sections 5.3.1.1 and 5.3.3 on July 19, 2001.

PROVIDED BY: Bill C. Peacock
Director, Local Services and Access Management
P. O. Box 6994
Douglasville, GA 30154

INTERROGATORY 3: Does AT&T contend that the definition of "local traffic" in the parties' current interconnection agreement in Mississippi means the same thing as the definition of "local traffic" in the Florida Interconnection Agreement?

RESPONSE: There is a not a "definition" per se of "local traffic" in the Florida interconnection Agreement to which to compare the definition of "local traffic" in the Mississippi Interconnection Agreement. Nevertheless, AT&T provides the following information:

The Mississippi Interconnection Agreement states that "Local Traffic means any telephone call that originates and terminates in the same LATA." The Mississippi Interconnection Agreement also states (1) ". . . the Parties have been unable to agree . . . whether dial up calls to Internet Service Providers or Information Service Providers ("ISP's") should be considered Local Traffic for purposes of this Agreement. . .;" (2) ". . . the Parties agree for purposes of this Agreement only to compensate each other at the same rate per minute of use rates set forth in Paragraph 6.1.2 [the rates for the transport and termination of Local Traffic] for ISP bound traffic;" and (3) ". . . [t]he Parties have been unable to agree as to whether a call that travels over transport protocol methods other than those being utilized by the Parties on the effective date of this Agreement and crosses LATA boundaries constitutes switched access traffic." Additionally, there is no definition of "Switched Access Traffic" in the Mississippi Interconnection Agreement.

The Florida Interconnection Agreement states " . . . [t]he Parties agree to apply a 'LATAwide' local concept to this Attachment 3, meaning that traffic that has been traditionally treated as intraLATA toll traffic will now be treated as local for intercarrier compensation purposes, except for calls that are originated or terminated through switched access arrangements as established by the State Commission or FCC." The Florida Interconnection Agreement also states (1) "ISP-bound Traffic is not Local Traffic or IP Telephony as set forth in Section 5.3.1.0 of this Agreement, subject to reciprocal compensation, but instead is information access traffic subject to the FCC's jurisdiction . . .;" (2) ". . . [n]otwithstanding the definitions of Local Traffic and ISP-bound Traffic above. .

. BellSouth and AT&T agree that the rebuttable presumption that all combined circuit switched Local and ISP-bound Traffic delivered to BellSouth or AT&T that exceeds a 3:1 ratio of terminating to originating traffic shall be considered ISP-bound Traffic for compensation purposes . . .;" (3) BellSouth and AT&T further agree that all combined circuit switched traffic Local and ISP-bound Traffic delivered to BellSouth that does not exceed a 3:1 ratio of terminating to originating traffic shall be considered Local Traffic for compensation purposes. . . ;" (4) ". . . [t]he Parties have been unable to agree to as to whether Voice over Internet Protocol ("VOIP") transmissions which cross local calling area boundaries constitute Switched Access Traffic. . . however. . . any VOIP transmission which originates in one LATA and terminates in another LATA shall (i.e. the end-to-end points of the call), shall not be compensated as "Local Traffic." Additionally, the Florida Interconnection Agreement contains a definition of "Switched Access Traffic" and also states that Section 5.3.3 (which contains the definition of "Switched Access Traffic") is "interrelated" to Section 5.3.1.1 (which sets forth what constitutes Local Traffic).

The foregoing establishes that although there is no "definition" of "local traffic" in the Florida Interconnection Agreement to which to compare the definition of "local traffic" in the Mississippi Interconnection Agreement (and the specific language in each agreement is somewhat different relative to compensation for Local Traffic, ISP-bound Traffic, VOIP calls and Switched Access Traffic), both agreements provide that the Parties agreed that all intraLATA traffic would be compensated at reciprocal compensation rates, except for ISP-bound Traffic and VOIP calls.

PROVIDED BY: Bill C. Peacock
Director, Local Services and Access Management
P. O. Box 6994
Douglasville, GA 30154

EXHIBIT NO._____

DOCKET NO.: 020919-TP

WITNESS: STIP-4

PARTY: BELLSOUTH

DESCRIPTION:

1. BellSouth Responses to AT&T's 1st Interrogatories, p. 1

PROFFERING PARTY: STAFF

I.D. # Stip-4

FLORIDA PUBLIC SERVICE COMMISSION
DOCKET NO. 020919-TP EXHIBIT NO. 4
COMPANY/ WITNESS. BellSouth-Stip-4
DATE: 5-07-03

REQUEST: Relative to Shiroishi's Direct Testimony at Page 6, lines 1 -4, which states "...if an intraLATA call originates or terminates through switched access arrangements, then that call is excluded from the 'Local Traffic' . . . [s]uch call would be governed by BellSouth switched access tariffs and would be subject to the appropriate switched access rates. . ."

(A) identify in either First or Second Interconnection Agreements where it is provided that "...such call would be governed by BellSouth's switched access tariffs and would be subject to the appropriate switched access rates. . ."
(B) if such language is not included in either First or Second Interconnection Agreements, state the basis for such conclusion being included Shiroishi's Direct Testimony.

RESPONSE:

(A) The quote does not appear in the agreement. However, see response to (B) below.

(B) The contract at issue references an exclusion from the definition of Local Traffic for calls that originate or terminate via switched access arrangements. Switched access services, which utilize switched access arrangements, are sold via tariffs, and not pursuant to the Interconnection Agreement.

RESPONSE PROVIDED BY:

Beth Shiroishi
Director
675 West Peachtree Street
Atlanta, Georgia 30375

REQUEST: Relative to Shiroishi's Direct Testimony at Page 6:

(A) at lines 18-19, identify (including the specific language therefor) the "definition of local traffic" that was similar to the "definition of local traffic" in First Interconnection Agreement;

(B) at lines 21-22, identify (including the specific language therefor) the "definition of local traffic" which BellSouth offered to AT&T that ". . . it [BellSouth] had used with other carriers;"

(C) at lines 21-24, (i) identify how the "new definition [of Local Traffic] expanded what was considered local within the LATA, but still excluded minutes that traversed switched access arrangements that the carrier had purchased from BellSouth;" (ii) identify (including the specific language therefor) what was meant by the language "switched access arrangements" as used in Second Interconnection Agreement and whether specific language regarding such meaning, or a definition of "switched access arrangements," is provided in either First or Second Interconnection Agreements;

(D) at lines 24-25, continuing on Page 7 at lines 1-2, (i) identify who at AT&T was involved in the ". . . discussion about the meaning of the exclusion . . . " (ii) who at AT&T responded that " . . . it [AT&T] would agree to this new definition [of Local Traffic] . . ." and when did AT&T agreed to this new definition [of Local Traffic]; (iii) identify what "slight language change" (including the specific language for such "slight language change") was requested by AT&T, by whom at AT&T and when.

RESPONSE: (continued)

(A) Local Traffic means any telephone call that originates and terminates in the same LATA and is billed by the originating Party as a local call **[when the originating Party has its own switch]. [OPEN-AT&T]** Therefore, when an AT&T end user originates traffic and AT&T sends it to BellSouth for termination, AT&T will determine whether the traffic is local or intraLATA toll. When a BellSouth end user originates traffic and BellSouth sends it to AT&T for termination, BellSouth will determine whether the traffic is local or intraLATA toll. Each Party will provide the other with information that will allow it to distinguish local from intraLATA toll traffic. At a minimum, each Party shall utilize NXX's in such a way that the other Party shall be able to distinguish local from intraLATA toll traffic.

(B) For reciprocal compensation between the Parties pursuant to this Attachment, Local Traffic is defined as any telephone call that originates and terminates in the same LATA except for those calls that are originated or terminated through switched access arrangements as established by the ruling regulatory body.

(C) By its express language, which was specifically explained to and discussed with AT&T prior to execution of the Interconnection Agreement.

(D) Bill Peacock was ATT's lead negotiator for the local interconnection issues and was involved in the "discussion about the meaning of the exclusion." Also involved in most negotiation sessions on this issue were Michael Karno, Roxanne Douglas, Roberta Stevens, and Sam Benenati. The Parties held several sessions in which the definition of local traffic was discussed. Bill Peacock of AT&T accepted the definition with the slight language change on a conference call the afternoon of 7/17/02. The language change was discussed during the conference call and was put into the next redlined version. This is reflected in the redlined version of attachment 3 of the agreement that BellSouth transmitted to AT&T on the morning of 7/18/02, and which is produced in response to Request for Production, Item No. 2.

RESPONSE: (continued)

RESPONSE PROVIDED BY: Beth Shiroishi
Director
675 West Peachtree Street
Atlanta, Georgia 30375

REQUEST: Relative to Shiroishi's Direct Testimony at Page 7 and Page 8:

(A) at Page 7, lines 9-11, identify when and how BellSouth proposed to AT&T the exclusion language ". . . except for those calls that are originated or terminated through switched access arrangements . . . ";

(B) at Page 7, lines 11-14, (i) identify who was present from BellSouth and AT&T when "discussions" took place regarding what was meant by the term "ruling regulatory body," (ii) identify what was said (and by whom) in these "discussions;" (iii) identify when and where these "discussions" took place;

(C) At Page 7, lines 14-18, (i) identify who was present from BellSouth and AT&T when "discussions" took place regarding " . . . the fact that this reference was to the switched access arrangements that are offered or purchased through each Party's switched access tariffs . . . " (ii) identify the substance of these "discussions" and when and where these "discussions" took place;

(D) At Page 7, lines 15-18, (i) identify in either First or Second Interconnection Agreements where it is provided that " . . . this reference [except for those calls that are originated or terminated through switched access arrangements as established by the State Commission or FCC] was to the switched access arrangements that are offered for purchase through each Party's switched access tariffs, which are approved by the State Commission (for intrastate switched access) or the FCC (for interstate switched access) . . ." (ii) identify in either First or Second Interconnection Agreements where it is provided that ". . . calls that are originated or terminated through switched access arrangements would be governed by each Party's switched access tariffs . . ." (iii) if such language is not included in either First or Second Interconnection Agreements, state the basis for such conclusions being included in Shiroishi's Direct Testimony;

(E) At Page 7, lines 24-25, identify the specific "calls" for which ". . . the exclusion was specifically written in order to exclude from the definition of 'Local Traffic' calls that are considered switched access under tariff . . .";

(F) At Page 8, lines 1-2, (i) identify who was present when the Parties ". . . had extensive discussion about the exclusion of traffic that originated or terminated through switched access arrangements. . ." (ii) identify when these "discussions" took place; (iii) identify the substance as to what was said during these "discussions";

RESPONSE: (continued)

(G) At Page 8, lines 2-4, (i) identify what was included in the "diagrams drawn on the whiteboard" and specify the types of calls that were "drawn on the whiteboard" which "traversed switched access arrangements;" (ii) identify who at AT&T and BellSouth was present when these diagrams were drawn and whether these diagrams (or copies thereof) still exit; (iii) identify the dates and locations where these diagrams were drawn.

RESPONSE:

(A) The exclusion for switched access calls was included the first time BellSouth proposed the language at issue in this proceeding, and that was on or about May 22, 2001. See response to Request for Production of Documents Item Numbers 2, 3, and 22 for the proposal.

(B) Beth Shiroishi of BellSouth and Bill Peacock of AT&T were present when discussions around the term "ruling regulatory body" took place during a conference call on the afternoon of July 17, 2002. Other representatives from both companies were potentially present, but there are no meeting minutes outlining such attendance. AT&T's "official note taker," Roberta Stevens, testified previously that she did not take any notes on the parties' discussions concerning the definition of local traffic because she did not consider it a key issue. Potential representatives from BellSouth include Michael Willis and Leah Cooper. Potential representatives from AT&T include Michael Karno, Roxanne Douglas, Roberta Stevens, and Sam Benenati.

(C) Several meetings and/or conference calls were held where the definition of local traffic was discussed or potentially discussed. The parties held a meeting on June 6, 2001. Participants in this meeting from BellSouth included Beth Shiroishi, Leah Cooper and Michael Willis. Participants from AT&T included Bill Peacock and Roberta Stevens. Other potential representatives from AT&T include Michael Karno, Roxanne Douglas, and Sam Benenati. A subsequent meeting was held on June 26, 2002. Documented attendants from AT&T at this meeting included Roxanne Douglas, Michael Karno, Roberta Stevens, Sam Benenati. BellSouth believes Bill Peacock was also in attendance. BellSouth representatives present included Michael Willis, Leah Cooper, Ed Honeycutt, and Lindsey. Additionally, a conference call was held on July 17, 2002. See Response to (B) for attendants.

RESPONSE: (continued)

(D) The relevant section of the Interconnection Agreement is 5.3.1.1 of Attachment 3. See also response to Interrogatory 1(B).

(E) Calls that originate or terminate through switched access arrangements.

(F) See response to (B) and (C)

(G) The diagrams outlined how separate trunk groups would carry different types of traffic, i.e., calls going over switched access trunk groups would be counted as switched access for compensation purposes, and intraLATA calls going over local interconnection trunk groups would be counted as local for compensation purposes. The diagrams were drawn on a whiteboard in the room where the meeting took place and were not saved. Persons present are those identified in response to Interrogatory 3(B).

RESPONSE PROVIDED BY: Beth Shiroishi
Director
675 West Peachtree Street
Atlanta, Georgia 30375

REQUEST: Relative to Shiroishi's Direct Testimony at Page 8, lines 11-13, where it states ". . . BellSouth has multiple interconnection agreements with ALECs containing the same definition of local traffic as in the AT&T agreement, which contains the exclusion for switched access arrangements. . ."

(A) State whether these other interconnection agreements with ALECs in Florida contain the exact same language as Second Interconnection Agreement regarding the "LATAwide" definition of "Local Traffic" as found in Section 5.3.1 of Attachment 3 to Second Interconnection Agreement, as well as the exact same language found in Section 5.3.3 of Attachment 3 to Second Interconnection Agreement;

(B) If the answer to (A) is "yes," identify all such interconnection agreements having the exact same language in one or both of these Sections;

(C) If the answer to (A) is "no," identify how these other interconnection agreements differ from Second Interconnection Agreement regarding the language in Sections 5.3.1 and 5.3.3.

RESPONSE: See BellSouth's Objections filed on March 31, 2003.

REQUEST: Identify how "switched access arrangements" as set forth in Section 5.3.1. of Attachment 3 to Second Interconnection Agreement are not included within the definition of "Switched Access Traffic" set forth in Section 5.3.3 of Attachment 3 to Second Interconnection Agreement?

RESPONSE: See Shiroishi deposition in North Carolina Dkt No. P-55, Sub 1376, as well as Shiroishi testimony at hearing in that docket.

REQUEST: Relative to Shiroishi's Direct Testimony at Page 9, lines 13-17, identify (A) which Party first proposed (and when) that Second Interconnection Agreement contain a definition of "Switched Access Traffic"; (B) why such Party proposed a definition of "Switched Access Traffic" be contained in Second Interconnection Agreement (C) what language was first proposed by such Party for the definition of "Switched Access Traffic"; (D) whether (and when) either Party subsequently proposed changes to such definition of "Switched Access Traffic" and the language for any such subsequently proposed changes to the definition of "Switched Access Traffic."

RESPONSE: (A) BellSouth first proposed a written definition of "Switched Access Traffic" to AT&T on July 11, 2001.

(B) Such definition was proposed to deal with the issue of VOIP traffic, as is reflected in the email transmitting such proposal.

(C) Switched Access Traffic. Switched Access Traffic is defined as telephone calls requiring local transmission or switching services for the purpose of the origination or termination of Telephone Toll Service. Switched Access Traffic includes, but is not limited to, the following types of traffic: Feature Group A, Feature Group B, Feature Group C, Feature Group D, toll free access (e.g., 800/877/888), 900 access, and their successors. The Parties have been unable to agree as to whether Voice over Internet Protocol (VOIP) transmissions which cross local calling area boundaries constitute Switched Access Traffic. Notwithstanding the foregoing, and without waiving any rights with respect to either Party's position as to the jurisdictional nature of VOIP, the Parties agree to abide by any effective and applicable FCC rules and orders regarding the nature of such traffic and the compensation payable by the Parties for such traffic, if any; provided however, that any VOIP transmission which originates in one local calling area and terminates in another local calling area (i.e., the end-to-end points of the call), shall not be compensated as Local Traffic.

(D) See response to Production of Documents, 6D for subsequent changes to the definition of Switched Access Traffic.

RESPONSE: (continued)

RESPONSE PROVIDED BY: Beth Shiroishi
Director
675 West Peachtree Street
Atlanta, Georgia 30375

REQUEST: Relative to Shiroishi's Direct Testimony at Page 9, lines 1-4, (A) identify why BellSouth agreed with AT&T in its most current interconnection agreement for Mississippi that " . . . *all* calls in the LATA would be considered local . . ." (B) identify why BellSouth did not agree to the same language with AT&T in interconnection agreements for other states; (C) identify who at AT&T and BellSouth were involved in the negotiations of the Mississippi interconnection agreement and when these negotiations started and concluded; (D) identify who at BellSouth made the decision that all ". . . calls in the LATA would be considered local. . ."

RESPONSE: See BellSouth's Objections filed on March 31, 2003.

REQUEST: Relative to Shiroishi's Direct Testimony at Page 10, lines 10-11, (A) identify which Party first proposed the "interrelated" language of Section 5.3.3 to AT&T; (B) why such Party proposed the "interrelated" language of Section 5.3.3 be contained in Second Interconnection Agreement (C) what language was first proposed by such Party for such "interrelated" language of Section 5.3.3; (D) whether (and when) either Party subsequently proposed changes to such "interrelated" language of Section 5.3.3 and the language for any such subsequently proposed changes to the "interrelated" language of Section 5.3.3; (E) where in either First or Second Interconnection Agreements it is stated that the "reference to the interrelationship [Section (5.3.3) to Section 5.3.1] . . . was added as the Parties were negotiating mutually agreeable language to deal with Voice over Internet Protocol . . ." (F) if such language is not included in either First or Second Interconnection Agreements, state the basis for the conclusion in Shiroishi's Direct Testimony that the reference to the interrelationship of Section 5.3.3 to Section 5.3.1.1 in Second Interconnection Agreement deals with Voice over Internet Protocol calls.

RESPONSE: (A) It appears from the redlined documents that BellSouth proposed the "interrelated" language of Section 5.3.3 to AT&T on July 17, 2001, following a discussion that morning with AT&T.

(B) The interrelated language was added by BellSouth after receiving a July 16, 2001 proposal from AT&T modifying the reference to local calling area in the definition of "Switched Access Traffic." See also Shiroishi rebuttal testimony pages 5 and 6.

(C) See Production of Documents, 8 (C) for specific language.

(D) See responses to Production of Documents, 8 (D).

(E) Such language is not found in the Second Interconnection Agreement.

(F) The basis for Ms. Shiroishi's testimony is that a definition of switched access traffic was not included in the drafts of attachment 3 exchanged by the Parties during their negotiations until the Parties began negotiating provisions addressing Voice over Internet Protocol

RESPONSE: (continued)

traffic in July of 2001. Further, the documents produced in Response to Production of Document 8 reflect this information.

RESPONSE PROVIDED BY: Beth Shiroishi
Director
675 West Peachtree Street
Atlanta, Georgia 30375

REQUEST: Relative to Shiroishi's Direct Testimony at Page 10, lines 18-22,

(A) identify in either First or Second Interconnection Agreements where it is provided that the definition of local traffic ". . . related to the type of arrangement, or trunk group, that the traffic originated over or terminated through. . ."
(B) identify what is meant by the term "this conversion" found in line 22;
(C) identify in either First or Second Interconnection Agreements where the term "conversion" is defined or discussed;
(D) identify in either First or Second Interconnection Agreements where it is provided that AT&T and BellSouth included Section 3 to Attachment 3 to Second Interconnection Agreement in order to address any such "conversion;"
(E) if such language from (A), (B) or (C) is not included in First or Second Interconnection Agreements, state the basis for such conclusion in Shiroishi's Direct Testimony that ". . . the definition of [Local Traffic] in Second Interconnection Agreement related to the type of arrangement or trunk group that the traffic originated over or terminated through. . ."
(F) identify with specificity what "conversion" or conversions" needed to take place under Second Interconnection Agreement and whether AT&T and BellSouth have made such "conversion" or "conversions" as BellSouth alleges is/are required by Second Interconnection Agreement in order for AT&T's traffic to be considered "Local Traffic" under Second Interconnection Agreement.

RESPONSE: See Shiroishi deposition in North Carolina Dkt No. P-55, Sub 1376.

REQUEST: Relative to Shiroishi's Direct Testimony at Page 11, lines 10-15, identify whether, pursuant to either First or Second Interconnection Agreements, BellSouth has charged AT&T local reciprocal compensation rates for the transport and termination of traffic where such traffic *has not* been transported over local interconnection trunk groups and facilities.

RESPONSE: In response to the First Interconnection Agreement, see BellSouth's objections filed on March 31. 2003. In response to the Second Interconnection Agreement, see Shiroishi deposition in North Carolina Dkt No. P-55, Sub 1376.

REQUEST: (A) Identify in either First or Second Interconnection Agreements where it is provided that BellSouth is entitled to charge AT&T rates from BellSouth's intrastate tariff(s) for traffic originated or terminated through "switched access arrangements;" (B) if such language is not included in either First or Second Interconnection Agreements, state the basis such conclusion being included in Shiroishi's Direct and Rebuttal Testimony.

RESPONSE: In response to the First Interconnection Agreement, see BellSouth's objections filed on March 31, 2003. In response to the Second Interconnection Agreement, see response to Interrogatory 1 (B).

RESPONSE PROVIDED BY: Beth Shiroishi
Director
675 West Peachtree Street
Atlanta, Georgia 30375

REQUEST: (A) Identify whether AT&T charges BellSouth local reciprocal compensation rates for the transport and termination of all BellSouth traffic "within a LATA;" (B) if the answer is "no," identify for which BellSouth traffic "within a LATA" AT&T does not charge BellSouth local reciprocal compensation rates and why.

RESPONSE: Yes. However, this is irrelevant and a red herring. The terms of the Interconnection Agreement are reciprocal.

REQUEST: Relative to Shiroishi's Direct Testimony at Pages 10-11, (A) is it BellSouth's position under Second Interconnection Agreement that the determination as to whether traffic is transported and terminated at local reciprocal compensation rates or switched access rates is based solely on the type of trunking arrangement that is used to transport such traffic? (B) if the trunking arrangement is not the sole criteria for determining whether traffic is transported and terminated at local reciprocal compensation rates, identify all other criteria and state whether (and where) each such criteria is contained in Second Interconnection Agreement.

RESPONSE: Under the Second Interconnection Agreement, the Parties agreed "to apply a "LATAwide" local concept to this Attachment 3, meaning that traffic that has traditionally been treated as intraLATA toll traffic will now be treated as local for intercarrier compensation purposes, except for those calls that are originated or terminated through switched access arrangements as established by the State Commission or FCC." As such, the criteria for determining whether local reciprocal compensation rates apply is whether the call originates and terminates in a LATA and whether the call is originated or terminated through switched access arrangements. If an IntraLATA call traverses switched access arrangements, then switched access, not reciprocal compensation, rates apply.

RESPONSE PROVIDED BY:

Beth Shiroishi
Director
675 West Peachtree Street
Atlanta, Georgia 30375

REQUEST: Relative to Shiroishi's Direct Testimony at Pages 10-11, identify how BellSouth determines whether AT&T is utilizing a "switched access trunking arrangement" versus a "local and intraLATA toll trunking arrangement" for the transport and termination of traffic as those terms are used either in Second Interconnection Agreement and/or Shiroishi's Direct Testimony?

RESPONSE: BellSouth determines whether AT&T is implementing a switched access arrangement versus a local interconnection arrangement by the service that AT&T orders. When AT&T places an order, it specifies on the ASR what type of arrangement it is ordering. See response to Production of Document 14.

RESPONSE PROVIDED BY: Beth Shiroishi
Director
675 West Peachtree Street
Atlanta, Georgia 30375

REQUEST: Relative to Shiroishi's Direct Testimony at Pages 10-11, (A) is BellSouth currently, or has BellSouth ever, applied local reciprocal compensation rates to AT&T traffic that transverses a trunk group or facility, which such trunk group or facility was ordered by AT&T from BellSouth via an access service request ("ASR")? (B) If the answer is "yes," please explain the process used by BellSouth to determine what traffic is subject to local reciprocal compensation rates.

RESPONSE: See BellSouth objections filed on March 31, 2003.

REQUEST: Relative to Shiroishi's Direct Testimony at Pages 10-11, (A) does BellSouth agree that it is technically feasible for AT&T to transport Local Traffic over the same interconnection trunk groups and facilities used to transport Switched Access Traffic? (B) If the answer is "no," explain why such is not technically feasible.

RESPONSE: See BellSouth objections filed on March 31, 2003.

REQUEST: Relative to Shiroishi's Direct Testimony at Pages 10-11, (A) are trunk groups or facilities which are used to transport and terminate Local Traffic functionally and technically equivalent to the trunk groups that are used to transport and terminate Switched Access Traffic? (B) If the answer is "no," explain how such trunk groups and facilities are not functionally and technically equivalent.

RESPONSE: See BellSouth's objections filed on March 31, 2003.

REQUEST: Relative to Shiroishi's Direct Testimony at Pages 10-11, (A) is it BellSouth's position that Second Interconnection Agreement requires all AT&T Local Traffic be sent over dedicated local interconnection trunk group(s) and that all AT&T Switched Access Traffic be sent over separate and distinct trunk groups or facilities? (B) For compensation purposes, what compensation rates are applied if both Local Traffic and Switched Access Traffic is "co-mingled" or "combined" over the same trunk group or facility?

RESPONSE: See BellSouth's response to AT&T's 1st Set of Interrogatories, Item No. 13.

REQUEST: Relative to Shiroishi's Direct Testimony at Pages 10-11, explain whether under Second Interconnection Agreement Local Traffic and Switched Access Traffic can be "co-mingled" or "combined" on the same interconnection trunk group, and still be compensated based on the end-points of the call?

RESPONSE: See BellSouth's response to AT&T's 1st Set of Interrogatories, Item No. 13.

REQUEST: What are the differences, if any, in the trunk groups and facilities (and the signaling for such trunk groups and facilities) for trunk groups and facilities used to transport and terminate Local Traffic and trunk groups and facilities used to transport and terminate Switched Access Traffic?

RESPONSE: See BellSouth's objections filed on March 31, 2003.

REQUEST: Relative to Shiroishi's Rebuttal Testimony at Page 2 lines 6-7 where it is stated ". . . [t]he term switched access arrangements is not the same as the specifically defined term "Switched Access Traffic. . ." (A) why did BellSouth agree to include a definition of "Switched Access Traffic" that *did not* include intrastate intraLATA traffic that was originated or terminated through switched access arrangements? (B) why did BellSouth "discuss" with AT&T that the term "switched access arrangements" meant traffic that was covered by BellSouth's intrastate tariff(s), but yet did not memorialize such "discussions" in contract language in Second Interconnection Agreement?

RESPONSE: Page 3 of the Interconnection Agreement states "certain terms have been defined in the body of the Agreement to encompass meanings that may differ from, or be in addition to, the normal connotation of the defined word. . . . A defined word intended to convey its special meaning is capitalized when used." The term "switched access arrangements" is *not* capitalized.

(A) and (B) See Shiroishi Rebuttal Testimony, pages 4 and 5.

RESPONSE PROVIDED BY:

Beth Shiroishi
Director
675 West Peachtree Street
Atlanta, Georgia 30375

REQUEST: Relative to Shiroishi's Rebuttal Testimony at Page 4 lines 25-35, identify the "correspondence between the Parties" which establishes that the Parties "inserted the agreement's definition of local traffic" before Section 5.3.3 was inserted.

RESPONSE: See documents produced in response to AT&T's First Request for Production of Documents, Item No. 22.

REQUEST: Relative to Shiroishi's Rebuttal Testimony at Page 5, line 11 and Page 6, line 14, (A) is the term "local calling area" as used therein different from the definition of "Local Traffic" as set forth in Second Interconnection Agreement?" (B) If so, what is the difference between "local calling area" and "Local Traffic" as referenced in Shiroishi's Rebuttal Testimony?

RESPONSE: Page 5, line 11 references the "traditional local calling area as specified in the tariff"

(A) Yes.

(B) Local traffic is described in the Second Interconnection Agreement as follows: The Parties agree to apply a "LATAwide" local concept to this Attachment 3, meaning that traffic that has traditionally been treated as intraLATA toll traffic will now be treated as local for intercarrier compensation purposes, except for those calls that are originated or terminated through switched access arrangements as established by the State Commission or FCC. The "traditional local calling area as specified in the tariff" is just that: the local calling areas that are set forth in each Parties tariffs.

RESPONSE PROVIDED BY: Beth Shiroishi
Director
675 West Peachtree Street
Atlanta, Georgia 30375

REQUEST: (A) Describe any and all BellSouth document retention practices, guidelines or policies regarding whether, how, and for how long BellSouth interconnection agreement contract negotiators or personnel are to advised to make notes, keep minutes, make or keep "red-lined" versions of contract provisions or otherwise summarize in writing interconnection negotiations with competing carriers under Section 252 of the Telecommunications Act of 1996; (B) describe any training or instructions (formal and informal), including when and who attended such training or was provide instructions, which BellSouth provided contract negotiators or personnel responsible for interconnection negotiations with AT&T for Second Interconnection Agreement regarding complying with such practices, guidelines or policies.

RESPONSE: See BellSouth's objections filed on March 31, 2003.

REQUEST: (A) Did BellSouth contract negotiators or personnel responsible for interconnection negotiations with AT&T for Second Interconnection Agreement make notes, keep minutes, make or keep "red-lined" versions of contract provisions or otherwise summarize in writing interconnection negotiations with AT&T for Second Interconnection Agreement? (B) if so, identify all such BellSouth contract negotiators or personnel; (C) identify any such notes, minutes, or "red-lined" versions of contract provisions or other written summaries of such interconnection negotiations with AT&T for Second Interconnection Agreement which still exist; (D) if any such notes, minutes, or "red-lined" versions of contract provisions or other written summaries of such interconnection negotiations with AT&T for Second Interconnection Agreement no longer exist, explain why they no longer exist and the specific date(s) such were discarded or destroyed; (E) identify whether any BellSouth employee or agent ever instructed or advised any BellSouth contract negotiators or personnel responsible for interconnection negotiations with AT&T for Second Interconnection Agreement to discard or destroy any such notes, minutes, or "red-lined" versions of contract provisions or other written summaries of such interconnection negotiations with AT&T for Second Interconnection Agreement, and when and why such instructions or advice was given.

RESPONSE: (A) Yes

(B) Michael Willis, Beth Shiroishi, Ed Honeycutt

(C) All notes, minutes, or red-lined versions of contract provisions or other written summaries of such interconnection negotiations with AT&T for Second Interconnection Agreement which still exist and that are related to this complaint have been produced

(D) It is possible that other notes, minutes, or "red-lined" versions of contract provisions or other written summaries of such interconnection negotiations with AT&T for Second Interconnection Agreement no longer exist. These would have been discarded after the interconnection agreement was signed, since they were no longer necessary documents. There is no record of the specific date such documents were discarded or destroyed, if it occurred.

RESPONSE: (continued)

(E) No BellSouth employee or agent ever instructed or advised any BellSouth contract negotiators or personnel responsible for interconnection negotiations with AT&T for Second Interconnection Agreement to discard or destroy any such notes, minutes, or "red-lined" versions of contract provisions or other written summaries of such interconnection negotiations with AT&T for Second Interconnection Agreement.

RESPONSE PROVIDED BY: Beth Shiroishi
Director
675 West Peachtree Street
Atlanta, Georgia 30375

REQUEST: Identify when Elizabeth R. A. Shiroishi first became involved in BellSouth's interconnection negotiations with AT&T for Second Interconnection Agreement for the state of Florida.

RESPONSE: The exact date is unknown, as BellSouth migrated email servers, and date markings on emails were lost in the migration of Elizabeth's computer. However, it appears as if the involvement were in late April or middle of May 2001.

RESPONSE PROVIDED BY: Beth Shiroishi
Director
675 West Peachtree Street
Atlanta, Georgia 30375

REQUEST: (A) State whether Elizabeth R. A. Shiroishi had the authority to agree to all of the language currently found in Sections 5.3.1.1 and 5.3.3 of Attachment 3 to Second Interconnection Agreement without first obtaining approval from others at BellSouth regarding such provisions; (B) if not, identify for which such provisions Shiroishi needed additional approval and who at BellSouth provided such additional approval and when.

RESPONSE: Yes.

RESPONSE PROVIDED BY: Beth Shiroishi
Director
675 West Peachtree Street
Atlanta, Georgia 30375

REQUEST: Identify when and how BellSouth first determined that it had a dispute with AT&T under Second Interconnection Agreement regarding what traffic would be transported and terminated at local reciprocal compensation rates.

RESPONSE: BellSouth and AT&T determined that they had a dispute regarding what traffic would be transported and terminated at local reciprocal compensation rates as they were working to amend the Second Interconnection Agreement to implement the FCC's ISP Order on Remand. See also BellSouth's response to Production of Documents, Item No.28.

RESPONSE PROVIDED BY: Beth Shiroishi
Director
675 West Peachtree Street
Atlanta, Georgia 30375

ORIGINAL TRANSCRIPT

BEFORE THE
NORTH CAROLINA UTILITIES COMMISSION

AT&T Communications of
the Southern States, LLC,
Teleport Communications Group, Inc.,
and TCG of the Carolinas, Inc.,

Complainants,

DOCKET NO. P-55, Sub 1376

vs.

BellSouth Telecommunications, Inc.,

Respondent.

DEPOSITION OF

JEFFREY A. KING

January 20, 2003
1:49 p.m.

1201 West Peachtree Street
Suite 3500
Atlanta, Georgia

Phyllis A. Lee, CCR-B-2321, RPR, CSR(IL), CRR

FLORIDA PUBLIC SERVICE COMMISSION
DOCKET NO. 020919-TP EXHIBIT NO. 5
COMPANY/ WITNESS: N.C.U.C.-Depo. of J. King
DATE: 5-07-03

Alexander Gallo Associates, Inc.
COURT REPORTING VIDEO SERVICES
• ATLANTA'S TECHNOLOGICAL LEADERS IN LITIGATION SUPPORT •

ATLANTA, GEORGIA WASHINGTON, DC CHICAGO, ILLINOIS NEW YORK, NEW YORK

Telephone (404) 495-0777
Facsimile (404) 495-0766
Toll Free (877) 495-0777

Complimentary Conference Rooms
Throughout Georgia And
Major Cities Nationwide

500 The Candler Building
127 Peachtree Street
Atlanta, Georgia 30303

www.galloreporting.com

1 APPEARANCES OF COUNSEL

2 **On behalf of AT&T:**

3 LORETTA A. CECIL, ESQUIRE

4 Womble Carlyle Sandridge & Rice

5 1201 West Peachtree Street

6 Suite 3500

7 Atlanta, GA 30309

8 (404)888-7437

9 lcecil@wcsr.com

10

11 **On behalf of BellSouth:**

12 ANDREW D. SHORE, ESQUIRE

13 Bellsouth Legal Department

14 675 West Peachtree Street

15 Suite 4300

16 Atlanta, GA 30375-0001

17 (404) 335-0765

18 andrew.shore@bellsouth.com

19

20 **Also Present:**

21 Beth Shiroishi - BellSouth

22 Nicole Bracy - BellSouth

23

24

25

1 **Deposition of Jeffrey A. King**

2 **January 20, 2003**

3 ***JEFFREY A. KING***, being first duly

4 sworn, was examined and testified as follows:

5 **EXAMINATION**

6 **BY-MR.SHORE:**

7 Q. Mr. King, good afternoon. Could you

8 just state your full name and your business

9 address for the record, please?

10 A. My name is Jeffrey A. King. I work

11 for AT&T. My business address is 1200 Peachtree

12 Street, Atlanta, Georgia, 30309.

13 Q. What is your job at AT&T?

14 A. I am a District Manager in the Local

15 Services and Access Management Organization.

16 Q. And what are your responsibilities?

17 A. I am responsible for AT&T's expenses

18 for both access services as well as local

19 services.

20 Q. And as part of your responsibilities

21 for AT&T's expenses for local and access

22 services, I take it -- or is it the fact that

23 you need to be familiar with the rates set

24 forth in AT&T's local Interconnection Agreements

25 with BellSouth?

A. Yes, Interconnection Agreement, tariffs and any place in which compensation applies.

Q. So you need to be familiar with BellSouth's intrastate and interstate switched access tariffs?

A. Correct.

Q. What does the term -- you ever heard the term traffic used in the telecommunications industry?

A. Yes.

Q. What does that refer to?

A. Traffic is generally considered something that is traffic sensitive, i.e., it is on a minute of use basis, something that is -- most long distance calls are, you know, considered to be on a per minute basis. How long were you on the phone? So switching equipment, et cetera, treats it as a usage sensitive component.

Q. Is traffic the messages that are transported over telecommunications facilities?

A. Traffic would generally be what's inside a facility or a trunk, yes.

Q. Before this case -- by this case, I

1 mean the North Carolina Docket P-55 Sub 1376 --
2 had you ever heard the term, switched access
3 arrangement?
4 A. Generally, yes. I mean, switched
5 access in general you can have lots of terms,
6 arrangements. Switched access facility, switched
7 access, and you can say it a number of
8 different ways. But switched access arrangements
9 would generally lead you to something that's
10 offered out of the switched access tariff.
11 Q. Are switched access arrangements and
12 switched access facilities synonyms?
13 A. Obviously a facility will take you
14 from point A to point B, an arrangement I would
15 probably classify getting you from point A to
16 point B. I'm not sure I would say it's a pure
17 synonym, but generally.
18 Q. Just tell me, then, what your
19 understanding of what a switched access
20 arrangement is?
21 MS. CECIL: Generally?
22 BY MR. SHORE:
23 Q. Right.
24 A. Generally, it is the facility that
25 provides the transport between two points or

1 multiple points.
2 Q. You have your testimony you filed in
3 this docket?
4 A. Yes.
5 Q. Both direct and rebuttal?
6 A. Uh-huh.
7 Q. Will you turn to your direct
8 testimony page 11. I think it's down at the
9 bottom of 11 going over to page 12. And your
10 testimony there says, "That the language found
11 in Section 5.3.1 of Attachment 3," you with me?
12 A. Yes.
13 Q. "To Second Interconnection Agreement
14 provides," and then you quote there, "except
15 those calls that are originated or terminated
16 through switched access arrangements as
17 established by the State Commission or FCC,
18 close quote, tracks precisely the definition of
19 switched access traffic as found in Section
20 5.3.3 Attachment 3." You see that?
21 A. Uh-huh.
22 Q. Now, when you say, "tracks
23 precisely," what are you trying to communicate
24 to the North Carolina Commission?
25 A. Well, you indicated even earlier, you

1 know, asked me about the definition of traffic.
2 Is it the messages? It's the call. And as
3 you can see, it says, "except those calls." So
4 we are speaking about, you know, the traffic
5 that is going -- that is being originated or
6 terminated here.
7 Q. Exhibit-2 to your direct testimony,
8 that sets forth the amount that you claim the
9 AT&T claims that BellSouth has overcharged AT&T
10 under the Second Interconnection Agreement
11 through August of 2002, right?
12 A. Correct.
13 Q. Page 16 of your testimony you say
14 you'll need to update that figure at the
15 hearing. Have you updated that figure?
16 A. I do not have an update at this
17 point in time. I'm attempting to try to get
18 it before I get there, yes.
19 Q. You still plan to update that?
20 MS. CECIL: Well --
21 THE WITNESS: Yes.
22 BY MR. SHORE:
23 Q. Do you have any idea what that
24 figure is?
25 MS. CECIL: We can give you the

update as of, I think, maybe October --

THE WITNESS: Well, right now, I think October is where we've got our systems that we can do the update. So it's going to be another two months, I think, on September, October.

BY MR. SHORE:

Q. Do you know what that is sitting here, approximately?

A. No.

MS. CECIL: I can give you that. I think we have it before you leave today.

MR. SHORE: Good.

THE WITNESS: I can rough, just you are looking at probably 100, 80, $90,000, maybe. If you look at August and just take two more months of it.

BY MR. SHORE:

Q. So you are tracking about a hundred thousand a month?

A. Roughly.

Q. The money you claim in your testimony in your exhibit that BellSouth has overcharged AT&T, AT&T has paid BellSouth that money, right? Or has AT&T paid BellSouth that

money?

A. On the reciprocal route? Are you talking about --

Q. No. In your testimony in Exhibit 2 you said through August of 2002, that BellSouth had overcharged AT&T $2.3 million, approximately?

A. Right.

Q. Is that money that AT&T has paid to BellSouth?

A. Yes. We currently -- in our billing process -- essentially we pay whatever is billed and then dispute. So any charges billed have been paid.

Q. I need to ask you before we start, do you have any corrections or revisions to make to your testimony, either direct or rebuttal, or any of your exhibits?

A. Not that I'm aware of, no. Well, the exhibit, obviously, when I get -- if I get that update, I'll provide an update tomorrow.

Q. Did you participate in any of the negotiation meetings with BellSouth leading up to the Second Interconnection Agreement before it was signed?

A. I don't recall any specific face to

1 face negotiation meetings I sat in that led up
2 to this language that's in dispute here.
3 Q. Are you an expert in Network
4 Architecture?
5 A. An expert, I have responsibility for
6 insuring that nothing happens to the network
7 that would impose increased costs to AT&T. So
8 I'm cognizant of the network that AT&T has in
9 place today. I'm cognizant of any implications
10 that the Interconnection Agreement would do to
11 those interconnection arrangements and the
12 network facilities to support it.
13 Again, to any extent that it impacts
14 our expenses, I needs to be knowledgeable and
15 provide it to whoever's attention needs to make
16 provision implementation issues, resolution, et
17 cetera.
18 Q. You know Dave Talbot at AT&T?
19 A. Uh-huh.
20 Q. What's his job?
21 A. He is generally, I guess, high level
22 would be kind of a policy smee in Network
23 Architecture. He has testified on behalf of
24 AT&T specific to Network Architecture issues.
25 Q. You are the only witness AT&T filed

1 in its direct case in this proceeding, right?
2 A. Yes.
3 Q. Okay. Why are you the person that
4 filed testimony?
5 A. Well, I have overall responsibility
6 for the expenses, and so this is my issue. I
7 was behind the scenes in trying to insure that
8 I was able to obtain an Interconnection
9 Agreement that followed the policies that I've
10 been directed to obtain. And I am the closest
11 to it.
12 Q. Okay. In your rebuttal -- I think
13 I'm done with your direct.
14 In your rebuttal testimony -- you
15 can't read up side down, can you Mr. King?
16 On pages 5 and 6 you testified there
17 that, "In the context of continuing to negotiate
18 two unresolved issues while the arbitration was
19 pending, Mr. Peacock advised you that BellSouth
20 proposed a new definition of Local Traffic." Do
21 you see that?
22 A. On page 5?
23 Q. It starts at the very bottom of page
24 5 and then really spills over to the top of
25 page 6.

A. Oh, right. -- Okay, I see that.

Q. What did Mr. Peacock tell you?

A. Well, this is where the -- you know, the discussion around the ISP traffic and the voice over Internet protocol traffic was coming about. And so BellSouth was wanting to define Local Traffic in such a way that even if a call was intraLATA in nature, it would not be treated as per se Local Traffic, because we were in agreement to disagree on the jurisdiction of these calls.

Q. I take it from your testimony, let me just pin that down, that your understanding of what BellSouth was trying to do, is that all based upon what Mr. Peacock was telling you?

A. Yes.

Q. As far as -- at least with respect to the definition of Local Traffic in the --

A. Well, the definition of Local Traffic to me is straightforward. The definition of switched access is straightforward. And so once we engaged in these two areas that we had in dispute, it was how do we address those in the Interconnection Agreement. That is where Mr. Peacock came to me and said we want to make

these changes to the LATA wide aspect of the contract. You know, am I going to have a problem with that?

Q. Let me get this straight.

Is it your testimony that Mr. Peacock came to you and said, we've addressed ISP traffic, we have addressed voice over Internet protocol traffic, and we want to come up with a definition of Local Traffic as a result of how we resolve those other two issues?

A. How it was approached to me was that BellSouth would not allow these types of calls to fall under the definition of Local Traffic.

Q. And which types -- when you say these types --

A. Voice over Internet protocol and ISP bound calls. ISP traffic.

Q. And Mr. Peacock told you that?

A. Right.

Q. And did Mr. Peacock tell you how BellSouth's proposed definition of Local Traffic and exclusion related, if at all, to those two other issues?

A. Well, yes. By creating the definitions, as been laid out actually, you

1 know, obviously in my testimony, the exclusion
2 -- well, number one, that brings in why there
3 is an interrelationship. Number two, once you
4 have that interrelationship, it allows you to
5 exclude these types of calls from being
6 characterized as Local Traffic. And one of the
7 means to do that is to insure that they do not
8 go over switched access arrangements.
9 And so that was the exclusion of
10 this traffic. You know, what that does
11 internally to me is to let my business units
12 know that these types of calls cannot use so
13 called, switched access arrangements, and expect
14 to get any type of local treatment. So that
15 was the direction that I in return, you know,
16 send off to my business units.
17 Q. Was it your understanding that the
18 contract language the parties agreed to that for
19 calls that went over switched access arrangements
20 would not get local reciprocal compensation
21 payments?
22 A. These calls only. Other calls that
23 were still local intraLATA in nature would
24 continue to be treated as such.
25 Q. Okay. And what was that

1 understanding based on, that other intraLATA
2 calls --
3 A. Because I had a definition of LATA
4 Local Traffic.
5 Q. With that understanding -- and for
6 the court reporter's benefit -- this is the
7 third time today, I don't feel badly and I have
8 done it too, if you could just wait for me to
9 finish my question before you answer and I'll
10 try to do the same. Otherwise, she gives me a
11 dirty look. We need to make sure, all kidding
12 aside, we have a very clean record.
13 Was that based on anything that Mr.
14 Peacock told you or was that based upon your
15 reading of the provisions in the contract?
16 A. I would have to say both.
17 Obviously, I'm going to look at the language in
18 the contract, you know, as an independent party.
19 Because if I have any issues, you know, I
20 obviously am going to push back on Mr. Peacock
21 to insure that he has the right understanding
22 and intent. And that was done, and I was
23 reassured of the intent of this language and
24 that it was indeed clear language, as far as
25 the definition of Local Traffic, definition of

1 switched access traffic.
2 And you know, it has been laid out
3 in the testimony that switched access traffic is
4 what is subject to switched access charges.
5 Q. When you say you, "push back on Mr.
6 Peacock regarding the definition of Local Traffic
7 and exclusion," what exactly did you push back?
8 What did you say to him?
9 A. Again, I think this is laid out in
10 my rebuttal as well, but obviously by seeing any
11 kind of exclusion that says I can't put any
12 kind of local -- you know, to take it on its
13 face and say I can't put LATA wide Local
14 Traffic over access takes away years of
15 development that we have already done to put
16 traffic over it. Certain of our local products
17 we have even had meetings with BellSouth to
18 insure we had that arrangement.
19 So any deviation where language says
20 now there is an exclusion would suggest that
21 there would have had to have been major network
22 overhauls, and I was never given that as a
23 result of the language that that was not
24 something that would have to take place. So
25 that was, again, reassurance that the exclusion

1 was, you know, specific to an interLATA traffic
2 by jurisdiction, interstate type traffic. And
3 it only applied to switched access traffic.
4 Q. Did you ask Mr. Peacock if the
5 language that he brought to you that BellSouth
6 proposed was going to require AT&T to make
7 Network Architecture changes?
8 A. Yes, and I was told none.
9 Q. Did you explain to Mr. Peacock at
10 that time what AT&T's Network Architecture was?
11 A. Well, yes. I would have explained
12 how we were already using the switched access
13 arrangements. And I would not be surprised had
14 he not already known that, that we were using
15 switched access for much of -- you know, for
16 certain parts of our local business.
17 Q. You recall telling him that at this
18 time in the context of this discussion?
19 A. I know that I explicitly had
20 discussions with him on the exclusion, and if it
21 had any implications to our existing business.
22 And the response was no, it did not have any
23 implications on our continuing to use, you know,
24 switched access for Local Traffic, as Local
25 Traffic was defined in our contract.

1 Q. Did you ask him any other questions,
2 other than what you have indicated so far
3 regarding the implications of the Local Traffic
4 definition?
5 A. Not that I'm aware of.
6 Q. Did he provide you any other
7 information about background or purpose of that
8 definition, other than what you have testified
9 about today?
10 A. Not beyond what's in my testimony.
11 You know, obviously, as I said, my
12 responsibility is the expense implications. And
13 I was reassured that I would not see any impact
14 to that.
15 Q. You say in your testimony on page 7
16 that, "Mr. Peacock explained to you that
17 BellSouth wanted to include the language to
18 protect BellSouth in the event the State
19 Commission or the FCC determined that ISP
20 traffic was deemed jurisdictionally to be
21 interLATA, even though the traffic typically
22 stayed within the LATA." Do you recall Mr.
23 Peacock telling you that before the agreement
24 was signed?
25 A. Right, that was what we were just

1 discussing before in the tie in to voice over
2 Internet as well as ISP bound calls, where we
3 agreed to disagree while the FCC was still
4 addressing those issues.
5 Q. In the next sentence there you say,
6 "Mr. Peacock further explained that BellSouth
7 would not allow such traffic."
8 What are you referring to, "such
9 traffic"?
10 A. The ISP traffic.
11 Q. Are you familiar with the FCC's
12 April 2001, what I think everybody in the
13 industry calls the ISP order on remand?
14 A. Yes.
15 Q. Okay. And what did the FCC conclude
16 in that order regarding the nature of ISP
17 traffic?
18 A. They had technically not decided that
19 it was per se intrastate or interstate. They
20 developed their own schedule for carriers, if
21 they so chose, which is what AT&T and BellSouth
22 chose to create a separate compensation scheme
23 specific to this type of traffic.
24 Q. Did you take any notes relative to
25 discussions with Mr. Peacock about the definition

1 of Local Traffic and the Interconnection
2 Agreement between BellSouth and AT&T?
3 A. Not with Mr. Peacock. You just
4 talking internal communications?
5 Q. Yes.
6 A. I'm sure I could probably -- I'm
7 sure that I would have issued an e-mail to my
8 management reassuring them -- because I obviously
9 have to approve the language that makes it into
10 the contract, reassuring them through my
11 discussions with Mr. Peacock of what we had
12 obtained through the Interconnection Agreement.
13 Q. Would you still have that?
14 A. Obviously, I can attempt to look.
15 Those are generally in sent e-mails, which I'm
16 not one that generally copies myself, so... but
17 I can obviously do a check to see if I can
18 find any such -- internal type communication
19 where I would have relayed my same
20 interpretation to my management.
21 MR. SHORE: Would y'all agree to
22 make a search for things prior to --
23 MS. CECIL: Let's go off the record.
24 (Off-the-record conference.)
25 MR. SHORE: I just want to be clear

1 on the record that we are going to request that
2 AT&T produce any internal e-mail or other
3 documents that relate to the definition of Local
4 Traffic in the Second Interconnection Agreement
5 dated on or before the time the parties executed
6 the agreement in July of 2001.
7 MS. CECIL: And AT&T would object to
8 that, because the question Mr. Shore just asked
9 was whether or not Mr. King had created any
10 such e-mails to his management. Mr. King will
11 make a reasonable search to see if he has any
12 such e-mail. We are not going to do a
13 wholesale review of all AT&T internal e-mails as
14 to whether or not anyone at AT&T communicated
15 with anyone else at AT&T about those
16 negotiations or the result of those negotiations
17 before the contract was signed.
18 MR. SHORE: And you agree, to the
19 extent Mr. King makes that search, he will
20 provide those documents to us?
21 MS. CECIL: Yes, we will provide
22 them to the extent he finds them after his
23 reasonable review.
24 THE WITNESS: That's July 2001 or
25 2000?

1 MS. CECIL: What time period do you
2 want him to search for?
3 MR. SHORE: Prior to the time that
4 the agreement was executed.
5 MS. CECIL: We also assert
6 attorney/client privilege, to the extent any of
7 those communications were also communicated to
8 counsel.
9 THE WITNESS: Which is likely what
10 could have happened.
11 MR. SHORE: If you find documents
12 and they are only attorney/client privilege, tell
13 me you got them but they are privileged. If
14 we need to fight over them, we'll deal with
15 that.
16 MS. CECIL: Okay.
17 BY MR. SHORE:
18 Q. When you discussed this issue with
19 Mr. Peacock about whether or not the Local
20 Traffic definition that made its way to the
21 agreement was acceptable to you, how long did
22 that conversation take?
23 A. I mean, there has been frequent
24 conversations.
25 Q. Prior to the time they executed the

1 agreement. I'm sure there has been many since
2 then.
3 A. Well, there were a few before that
4 as well, so they could have lasted anywhere from
5 a couple of minutes to five minutes to, you
6 know, being on conference calls. That would
7 vary. I don't have any --
8 Q. You have any recollection sitting
9 here today?
10 A. I mean, I don't have a sense as to
11 whether they would have been two minutes or 30
12 minutes.
13 Q. Is it your position that the
14 exclusion language set forth in, I think,
15 Section 5.3.1 of the quote in your testimony
16 relates to interLATA calls?
17 A. Yes.
18 Q. Are interLATA calls ever considered
19 local?
20 A. No.
21 Q. Now, on page 9 of your testimony --
22 A. I should qualify that, per the terms
23 of our current agreement. Obviously, the voice
24 over Internet and ISP, I mean, that can still
25 go certain ways. But based on the way our

1 contract reads right now, my response is
2 interLATA equals switched access, intraLATA
3 equals local.
4 Q. And outside of the contract and your
5 work in the industry, are interLATA calls ever
6 received local?
7 A. No.
8 Q. On page 9 of your rebuttal
9 testimony, you say that Mr. Peacock advised you
10 that BellSouth's rational for Local traffic
11 definition had been explained to Mr. Peacock and
12 others. Do you see that?
13 A. Uh-huh.
14 Q. Do you know what others?
15 A. That would have been others of the
16 Interconnection Agreement team that would have
17 been present.
18 Q. Did you ever talk to any of these
19 other folks prior to the time -- about the
20 local definition issue prior to the time AT&T
21 executed the agreement in July?
22 A. My conversations were generally
23 directly with Billy, he is my peer. Obviously,
24 there were times where his negotiating team was
25 present, but I guess generally it would be

1 between Billy and I.--
2 Q. You recall talking to anybody else
3 about this issue prior to --
4 A. Not one-on-one. It would have been
5 just via general meetings.
6 Q. Did you know what BellSouth's
7 position was in the arbitration of the Second
8 Interconnection Agreement with AT&T was with
9 respect to VOIP calls?
10 A. I understood that they wanted them
11 treated as interLATA for jurisdictional purposes.
12 And AT&T, you know, viewed it as local for
13 jurisdictional purposes. That's from a general
14 policy perspective.
15 Q. Do you know whether BellSouth ever
16 changed its position, as you understood it?
17 A. Not that I'm aware of, just as AT&T
18 has not changed either.
19 Q. You say on page 9 of your rebuttal
20 also that you discussed with Mr. Peacock that
21 BellSouth had proposed language in Section 5.3.3
22 that said that that section was interrelated to
23 5.3.1.
24 A. Correct.
25 Q. What was that discussion with Mr.

1 Peacock? Tell me the substance of that
2 discussion?
3 A. Well, again, this would have been
4 back to -- because this was not just one
5 change, but the multiple changes that had taken
6 place. But it brought in the fact that they
7 were interrelated, the two sections were
8 interrelated such that the exclusion only
9 addressed those things that were interLATA in
10 nature, or those calls that we agreed to
11 disagree on, i.e., the VOIP and ISP could not
12 be treated as local, even though they may have
13 been originated and terminated win the same
14 LATA.
15 And so that was the -- you have
16 5.3.3, which says here is the type of traffic
17 you have, the traffic is what defines your
18 compensation, not the arrangements. And so what
19 the arrangement section was bringing in was to
20 insure that I didn't misrepresent the VOIP/ISP
21 type traffic over those same trunks, even though
22 I may have technically been able to prove like,
23 for instance, that a call in ISP was within the
24 LATA. So I was not going to misrepresent
25 calls, you know, as something that they were

1 not.

2 Q. If I understand correctly from your

3 direct testimony that you filed in this case,

4 that your interpretation, AT&T's interpretation

5 of the Local Traffic definition exclusion, it is

6 clear from the face of the Second

7 Interconnection Agreement?

8 A. Yes.

9 Q. Now, is it your understanding under

10 AT&T's interpretation of the agreement that AT&T

11 can charge its retail customer a toll rate for

12 an intraLATA toll call, but would have to pay

13 BellSouth local reciprocal compensation rate to

14 terminate that call for AT&T?

15 A. I'm not in the pricing organization.

16 I'm on the expense side. So to me this is a

17 bucket of intrastate minutes that I am

18 responsible for. How the business units retail

19 their products, that's -- I don't make that

20 call.

21 Q. Are you aware of whether or not AT&T

22 charges retail customers in North Carolina for

23 intraLATA toll calls in some sort of --

24 A. I don't know.

25 Q. Could you look at page 12 of your

1 rebuttal, Mr. King? There is a sentence about
2 a third or so of the way down that start on
3 line 8. It says, "Put BellSouth's position in
4 perspective." You see that?
5 A. Uh-huh.
6 Q. If an AT&T UNE-P customer was
7 calling a BellSouth customer (i.e. a customer
8 which is pic'd -- P-I-C-'-D all caps -- or uses
9 BellSouth for intraLATA services)." Do you see
10 that?
11 A. Yes.
12 Q. In the parentheses there when you
13 refer to the customer, are you referring to the
14 AT&T customer or the BellSouth customer?
15 A. That's the BellSouth customer.
16 Q. On page 13 at the top there you
17 state that, "AT&T does not purchase originating
18 switched access from BellSouth for LATA wide
19 Local Traffic," right?
20 A. Correct.
21 Q. Is that because AT&T is using its
22 own loop and switch to originate that traffic?
23 A. Yes.
24 Q. Under the Interconnection Agreement,
25 the Second Interconnection Agreement between the

1 parties in North Carolina, is it AT&T's
2 responsibility to provide the PLU, all caps, to
3 BellSouth?
4 A. Yes.
5 Q. Okay. Do you agree that the PLU is
6 to be based on the definition of Local Traffic
7 in the agreement as to what constitutes local?
8 A. Yes.
9 Q. And if the parties were to disagree
10 on what the definition of Local Traffic was,
11 they are going to dispute the PLU factor, is
12 that correct?
13 A. Correct.
14 Q. Can we agree that if BellSouth
15 applies its definition, the definition it says
16 is correct under the contract to Local Traffic,
17 the PLU factor would be less than under AT&T's
18 definition?
19 A. Generally, that would be the case.
20 You would still have the same denominator of
21 total intrastate minutes, yes.
22 Q. And would it also be less than at
23 the factor that BellSouth has frozen AT&T's PLU
24 at now?
25 A. I don't know that it would be less

than what it was frozen. I mean, it's somewhat fluid.

Q. Is it true that PLU factors are reported on a statewide basis?

A. Yes.

Q. BellSouth doesn't bill AT&T by Trunk Group, does it?

A. No.

Q. Do you know whether or not AT&T is terminating voice over Internet protocol calls to BellSouth in certain states as opposed to other states?

A. Do I know?

MS. CECIL: I'm going to object to that question, unless you can tie it some way to this.

BY MR. SHORE:

Q. Let me ask you a different question.

Do you know whether or not AT&T is terminated VOIP calls to BellSouth in Mississippi?

A. I don't believe so. I don't know.

Q. Let me talk a little bit about -- go back to page 12, the scenario you discussed there that we talked a little bit about.

1 You say there starting on line 9,
2 "That if an AT&T UNE-P customer was calling a
3 BellSouth customer, i.e., a customer which is
4 pic'd or uses BellSouth for intraLATA service,
5 and the BellSouth customer returns that call to
6 the AT&T UNE-P customer, AT&T would receive no
7 compensation from BellSouth." Do you see that?
8 A. Correct.
9 Q. Okay. As I understand it, I guess
10 there is two call loads here. So let me try
11 to play it out, make sure I understand.
12 The UNE-P customer of AT&T is
13 calling the BellSouth customer, right?
14 A. That's one call, right.
15 Q. What type of call is that, local or
16 a One Plus dialed?
17 A. The example is intended to be a One
18 Plus dialed, represent a One Plus dialing
19 pattern.
20 Q. Is it intended to represent intraLATA
21 or interLATA?
22 A. IntraLATA.
23 Q. If it's One Plus dialed intraLATA,
24 as you said, who is the originating carrier's
25 L-pic?

A. Which direction are we -- obviously, whichever direction we want to take the call. The originating direction is going to be the -- you know, who has the customer -- maybe I need to have you start the question over again.

Q. Yeah. Whose that customer pic'd to for that intraLATA One Plus call in your example?

A. As the UNE-P?

Q. Yes.

A. Well, the way the scenario is laid out, is you have an AT&T UNE-P local customer that's been intraLATA pic'd to AT&T calling a BellSouth local customer that has been pic'd to BellSouth for LD. The example is taking you through two directions of the same call. When I say the came call, I mean between the two same points within the LATA.

Q. What rate elements would AT&T pay BellSouth because of the fact that AT&T is using BellSouth's UNE-P network, or network by virtue of the fact it's a UNE-P call, may be a better way to phrase it?

A. Are we taking an originating call coming from an AT&T UNE-P customer?

1 Q. Yes.
2 A. To a BellSouth that is One Plus --
3 Q. IntraLATA.
4 A. The call will start -- well,
5 obviously UNE-P is the loop and port
6 combination. Those are relatively fixed charges
7 to the end user. The call will hit the
8 originating office and be charged originating
9 UNE-Local switching. The call will then be
10 routed over dedicated trunks over the AT&T LD
11 network. Follows the LD network to the
12 terminating office of the BellSouth customer, is
13 handed off to BellSouth.
14 What I would like is for them to
15 pay me -- or for AT&T to pay recip comp for
16 BellSouth to terminate that call the remainder
17 of the way to that end user. The issue at hand
18 here, obviously, is that BellSouth just because
19 that call went over the switched access network
20 is a switched access call.
21 Q. Let's move to the --
22 A. Now you want to take the call in
23 the reverse?
24 Q. Right, BellSouth customer calls your
25 UNE-P customer. What type of call is that,

1 local, One Plus?
2 A. It's still One Plus call.
3 Q. IntraLATA?
4 A. It's an intraLATA call going to the
5 same two points, going from that customer to
6 this same AT&T customer that we just had in the
7 previous example.
8 Q. Okay. And in your example, who is
9 the BellSouth customer's L-pic?
10 A. BellSouth.
11 Q. Okay. And what rate elements would
12 AT&T pay BellSouth because of the fact that AT&T
13 is using BellSouth's network to terminate the
14 call?
15 A. In this case, it's a BellSouth
16 originated call. BellSouth customer, BellSouth
17 L-pic. Per our Interconnection Agreement or the
18 call flows that we have agreed to for Local
19 Traffic, the originating party is responsible for
20 both the originating and termination of the
21 call.
22 So because of the fact that the call
23 is going to an AT&T UNE-P customer, i.e., it is
24 BellSouth's facilities, that One Plus call
25 basically goes on BellSouth's network from the

1 BellSouth customer through its interoffice
2 facilities, whether you want to call it
3 BellSouth's toll network internally, whatever,
4 but it's going to the same point where the AT&T
5 UNE-P customer is. Because it's considered
6 Local Traffic, there is no compensation to AT&T
7 for that call.
8 And just to put it in perspective,
9 if AT&T UNE-P customer were to have AT&T as its
10 L-pic and we chose to use the BellSouth network
11 to route that One Plus call, as opposed to
12 taking it into our off net into our own LD
13 network, that call would be treated just like
14 any other local call and AT&T would pay the UNE
15 rates, the unbundled network element rates both
16 to originate and terminate that call on Bell's
17 network.
18 Q. Does the dispute in this case
19 involve any UNE-P calls?
20 A. Conceptually it does. Are there any
21 calls currently within the dispute, the $2
22 million? No.
23 MR. SHORE: I think that's all I
24 have, Mr. King. Just give me a second to look
25 through my notes.

1 (A short recess transpired.)
2 MR. SHORE: Okay. That's all I
3 have. Ms. Cecil might have some questions.
4 MS. CECIL: No, I don't.
5 MR. SHORE: Great. See you
6 Wednesday.
7 (WHEREUPON, the deposition was
8 concluded.)
9
10
11
12
13
14
15
16
17
18
19
20
21
22
23
24
25

STATE OF GEORGIA:

COUNTY OF FULTON:

I hereby certify that the foregoing transcript was reported, as stated in the caption, and the questions and answers thereto were reduced to typewriting under my direction; that the foregoing pages represent a true, complete, and correct transcript of the evidence given upon said hearing, and I further certify that I am not of kin or counsel to the parties in the case; am not in the employ of counsel for any of said parties; nor am I in anywise interested in the result of said case.

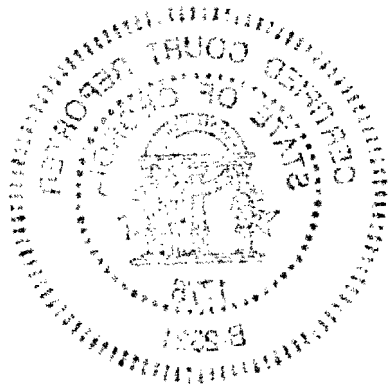

Disclosure Pursuant to Article 8(B) of the Rules and Regulations of the Board of Court Reporting of the Judicial Council of Georgia, I make the following disclosure:

I am a Georgia Certified Court Reporter, here as a representative of Alexander Gallo & Associates, Inc., to report the foregoing matter. Alexander Gallo & Associates, Inc., is not taking this deposition under any contract that is prohibited by O.C.G.A. 5-14-37 (a) and (b).

Alexander Gallo & Associates, Inc., will be charging its usual and customary rates for this transcript.

/s/ Phyllis A. Lee

Phyllis A. Lee, CCR-B-2321

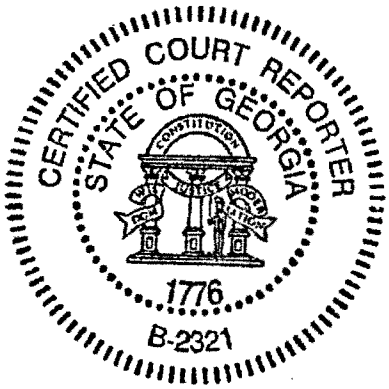

1 CAPTION

2 The Deposition of **Jeffrey A. King**,
3 taken in the matter, on the date, and at the
4 time and place set out on the title page
5 hereof.
6 It was requested that the deposition
7 be taken by the reporter and that same be
8 reduced to typewritten form.
9 It was agreed by and between counsel
10 and the parties that the Deponent will read
11 and sign the transcript of said deposition.
12
13
14
15
16
17
18
19
20
21
22
23
24
25

1 CERTIFICATE

2 STATE OF_____:

3 COUNTY/CITY OF_____:

4 Before me, this day, personally

5 appeared, **Jeffrey A. King**, who, being duly

6 sworn, states that the foregoing transcript

7 of his/her Deposition, taken in the matter,

8 on the date, and at the time and place set

9 out on the title page hereof, constitutes a

10 true and accurate transcript of said

11 deposition.

12 _____

13 **Jeffrey A. King**

14

15 SUBSCRIBED and SWORN to before me this

16 _____ day of_____, 2003 in the

17 jurisdiction aforesaid.

18 _____ _____

19 My Commission Expires Notary Public

20

21

22

23

24

25

DEPOSITION ERRATA SHEET

RE: Alexander Gallo & Associates
File No. 3587
Case Caption: AT&T Communications, et al. vs. BellSouth Telecommunications, Inc.
Deponent: **Jeffrey A. King**
Deposition Date: January 20, 2003

To the Reporter:
I have read the entire transcript of my Deposition taken in the captioned matter or the same has been read to me. I request that the following changes be entered upon the record for the reasons indicated. I have signed my name to the Errata Sheet and the appropriate Certificate and authorize you to attach both to the original transcript.

Page No. _____ Line No. _____ Change to: _____

_____

Reason for change: _____

Page No. _____ Line No. _____ Change to: _____

_____

Reason for change: _____

Page No. _____ Line No. _____ Change to: _____

_____

Reason for change: _____

Page No. _____ Line No. _____ Change to: _____

_____

Reason for change: _____

Page No. _____ Line No. _____ Change to: _____

_____

Reason for change: _____

Deposition of Jeffrey A. King

Page No. _____ Line No. _____ Change to: _____

_____

Reason for change: _____

Page No. _____ Line No. _____ Change to: _____

_____

Reason for change: _____

Page No. _____ Line No. _____ Change to: _____

_____

Reason for change: _____

Page No. _____ Line No. _____ Change to: _____

_____

Reason for change: _____

Page No. _____ Line No. _____ Change to: _____

_____

Reason for change: _____

Page No. _____ Line No. _____ Change to: _____

_____

Reason for change: _____

SIGNATURE: _____ DATE: _____

Jeffrey A. King

1 AMENDED CERTIFICATE

2 STATE OF GEORGIA:

3 COUNTY OF FULTON:

4 I hereby certify that in addition to the
5 certification made on the Reporter's
6 Certificate Pages, this Original Deposition
7 has been sealed pending the witness' right to
8 review said deposition within 30 days, which
9 time has not elapsed.

10 Alexander Gallo & Associates, Inc.

11

12

13

14

15

16

17

18

19

20

21

22

23

24

25

A

able 11:8 26:22
about 7:1,4 8:19 9:3 12:6 18:7,9 19:25 21:15 22:19 24:19 25:3 28:1 30:23 30:25
acceptable 22:21
access 3:15,18,21 4:6 5:2,5,6,7,8,10 5:11,12,19 6:16 6:19 12:21 14:8 14:13,19 16:1,3,4 16:14 17:3,12,15 17:24 24:2 28:18 33:19,20
accurate 40:10
actually 13:25
address 3:9,11 12:23
addressed 13:6,7 26:9
addressing 19:4
advised 11:19 24:9
aforesaid 40:17
after 21:22
afternoon 3:7
again 10:13 16:9,25 26:3 32:5
agree 20:21 21:18 29:5,14
agreed 14:18 19:3 26:10 34:18 39:9
agreement 4:1 6:13 7:10 9:23 10:10 11:9 12:10,24 18:23 20:2,12 21:4,6 22:4,21 23:1,23 24:16,21 25:8 27:7,10 28:24,25 29:7 34:17
Agreements 3:24
al 41:5
Alexander 38:8,9 38:13 41:3
allow 13:12 19:7
allows 14:4
already 16:15 17:12 17:14
amount 7:8
ANDREW 2:12
andrew.shore@b... 2:18
another 8:5
answer 15:9
answers 37:5
anybody 25:2
anyone 21:14,15
anything 15:13
anywhere 23:4
anywise 37:13
APPEARANCES 2:1
appeared 40:5
applied 17:3
applies 4:3 29:15
approached 13:11
appropriate 41:17
approve 20:9
approximately 8:9 9:6
April 19:12
arbitration 11:18 25:7
Architecture 10:4 10:23,24 17:7,10
areas 12:22
around 12:4
arrangement 5:3,14 5:20 16:18 26:19
arrangements 5:6,8 5:11 6:16 10:11 14:8,13,19 17:13 26:18
Article 38:1
aside 15:12
asked 7:1 21:8
aspect 13:1
assert 22:5
Associates 38:8,10 38:13 41:3
Atlanta 1:14 2:7,16 3:12
attach 41:18
Attachment 6:11,20
attempt 20:14
attempting 7:17
attention 10:15
attorney/client 22:6 22:12
AT&T 1:2 2:2 3:11 3:13 7:9,9 8:24,24 8:25 9:6,8 10:7,8 10:18,24,25 17:6 19:21 20:2 21:2,7 21:13,14,15 24:20 25:8,12,17 27:10 27:14,21 28:6,14 28:17,21 30:6,9 30:19 31:2,6,6,12 32:12,13,19,20,25 33:10,15 34:6,12 34:12,23 35:4,6,9 35:9,14 41:5
AT&T's 3:17,21,24 17:10 27:4,10 29:1,17,23
August 7:11 8:16 9:5
authorize 41:17
aware 9:18 18:5 25:17 27:21
away 16:14

B

b 5:14,16 38:12
back 15:20 16:5,7 26:4 30:24
background 18:7
badly 15:7
based 12:15 15:1,13 15:14 23:25 29:6
basically 34:25
basis 4:15,17 30:4
before 1:1 4:25 7:18 8:12 9:14,23 15:9 18:23 19:1 21:5 21:17 23:3 40:4 40:15
behalf 2:2,11 10:23
behind 11:7
being 3:3 7:5 14:5 23:6 40:5
believe 30:22
BellSouth 1:7 2:11 2:13,21,22 3:25 7:9 8:23,24,25 9:5 9:9,22 11:19 12:6 12:14 13:12 16:17 17:5 18:17,18 19:6,21 20:2 25:15,21 27:13 28:7,9,14,15,18 29:3,14,23 30:6 30:11,20 31:3,4,5 31:7,13 32:14,15 32:20 33:2,12,13 33:16,18,24 34:9 34:10,12,15,16,16 35:1,10 41:6
BellSouth's 4:5 13:21 24:10 25:6 28:3 32:21 34:13 34:24,25 35:3
Bell's 35:16
benefit 15:6
Beth 2:21
better 32:22
between 5:25 20:2 25:1 28:25 32:17 39:9
beyond 18:10
bill 30:6
billed 9:11,12
billing 9:10
Billy 24:23 25:1
bit 30:23,25
Board 38:3
both 3:18 6:5 15:16 34:20 35:15 41:18
bottom 6:9 11:23
bound 13:17 19:2
Bracy 2:22
bringing 26:19
brings 14:2
brought 17:5 26:6
bucket 27:17
business 3:8,11 14:11,16 17:16,21 27:18
BY-MR.SHORE 3:6

C

call 7:2 12:8 26:23 27:12,14,20 31:5 31:10,14,15 32:2 32:7,16,17,22,24 33:4,7,9,16,19,20 33:22,25 34:2,4 34:14,16,18,21,22 34:24 35:2,7,11 35:13,14,16
called 14:13
calling 28:7 31:2,13 32:13
calls 4:16 6:15 7:3 12:11 13:12,17 14:5,12,19,22,22 15:2 19:2,13 23:6 23:16,18 24:5 25:9 26:10,25 27:23 30:10,20 33:24 35:19,21
came 12:25 13:6 32:17
caps 28:8 29:2
caption 37:5 39:1 41:5
captioned 41:12
Carlyle 2:4
Carolina 1:1 5:1 6:24 27:22 29:1
Carolinas 1:4
carriers 19:20
carrier's 31:24
case 4:25,25 11:1 27:3 29:19 34:15 35:18 37:11,14 41:5
CCR-B-2321 1:16 38:19
Cecil 2:3 5:21 7:20 7:25 8:11 20:23 21:7,21 22:1,5,16 30:14 36:3,4
certain 16:16 17:16 23:25 30:11
Certificate 40:1 41:17
Certified 38:6
certify 37:3,10
cetera 4:19 10:17
change 26:5 41:20 41:22,23,25 42:1 42:3,4,6,7,9,12,14 42:15,17,18,20,21 42:23,24 43:1,2,4
changed 25:16,18
changes 13:1 17:7 26:5 41:14
characterized 14:6
charge 27:11
charged 33:8
charges 9:12 16:4 27:22 33:6
charging 38:14
check 20:17
chose 19:21,22 35:10
claim 7:8 8:22
claims 7:9
classify 5:15
clean 15:12
clear 15:24 20:25 27:6
close 6:18
closest 11:10
cognizant 10:8,9

combination 33:6
come 13:8
coming 12:5 32:25
Commission 1:1 6:17,24 18:19 40:19
communicate 6:23
communicated 21:14 22:7
communication 20:18
communications 1:2,3 20:4 22:7 41:5
comp 33:15
compensation 4:2 14:20 19:22 26:18 27:13 31:7 35:6
Complainants 1:5
complete 37:8
component 4:20
Conceptually 35:20
conclude 19:15
concluded 36:8
conference 20:24 23:6
considered 4:13,17 23:18 35:5
constitutes 29:7 40:9
context 11:17 17:18
continue 14:24
continuing 11:17 17:23
contract 13:2 14:18 15:15,18 17:25 20:10 21:17 24:1 24:4 29:16 38:11
conversation 22:22
conversations 22:24 24:22
copies 20:16
correct 4:7 7:12 25:24 28:20 29:12 29:13,16 31:8 37:8
corrections 9:15
correctly 27:2
costs 10:7
Council 38:4
counsel 2:1 22:8 37:11,12 39:9
COUNTY 37:2
COUNTY/CITY 40:3
couple 23:5
court 15:6 38:3,6
create 19:22
created 21:9
creating 13:24
CRR 1:16
CSR(IL) 1:16
current 23:23
currently 9:10 35:21
customary 38:15
customer 27:11 28:6,7,7,13,14,14 28:15 31:2,3,3,5,6 31:12,13 32:4,6 32:12,14,25 33:12 33:24,25 34:5,6 34:16,23 35:1,5,9
customers 27:22
customer's 34:9

D

D 2:12 28:8
date 39:3 40:8 41:8 43:7
dated 21:5
Dave 10:18
day 40:4,16
deal 22:14
decided 19:18
dedicated 33:10
deemed 18:20
define 12:6
defined 17:25
defines 26:17
definition 6:18 7:1 11:20 12:18,19,20 13:9,13,21 15:3 15:25,25 16:6 18:4,8 19:25 21:3 22:20 24:11,20 27:5 29:6,10,15 29:15,18
definitions 13:25
denominator 29:20
Department 2:13
Deponent 39:10 41:7
deposition 1:9 3:1 36:7 38:11 39:2,6 39:11 40:7,11 41:1,8,12 42:10
determined 18:19
developed 19:20
development 16:15
deviation 16:19
dialed 31:16,18,23
dialing 31:18
different 5:8 30:18
direct 6:5,7 7:7 9:16 11:1,13 27:3
directed 11:10
direction 14:15 32:1,2,3 37:7
directions 32:16
directly 24:23
dirty 15:11
disagree 12:10 19:3 26:11 29:9
disclosure 38:1,5
discussed 22:18 25:20 30:24
discussing 19:1
discussion 12:4 17:18 25:25 26:2
discussions 17:20 19:25 20:11
dispute 9:12 10:2 12:23 29:11 35:18 35:21
distance 4:16
District 3:14
docket 1:5 5:1 6:3
documents 21:3,20 22:11
done 11:13 15:8,22 16:15
down 6:8 11:15 12:13 28:2
duly 3:3 40:5

E

earlier 6:25
either 9:16 25:18
element 35:15
elements 32:19 34:11
employ 37:12
end 33:7,17
engaged 12:22
entered 41:14
entire 41:11
equals 24:2,3
equipment 4:19
Errata 41:1,16
ESQUIRE 2:3,12
essentially 9:11
established 6:17
et 4:19 10:16 41:5
even 6:25 12:7 16:17 18:21 26:12 26:21
event 18:18
ever 4:8 5:2 23:18 24:5,18 25:15
everybody 19:12
evidence 37:9
exactly 16:7
EXAMINATION 3:5
examined 3:4
example 31:17 32:8 32:15 34:7,8
except 6:14 7:3
exclude 14:5
exclusion 13:22 14:1,9 16:7,11,20 16:25 17:20 23:14 26:8 27:5
executed 21:5 22:4 22:25 24:21
exhibit 8:23 9:4,19
exhibits 9:17
Exhibit-2 7:7
existing 17:21
expect 14:13
expense 18:12 27:16
expenses 3:17,21 10:14 11:6
expert 10:3,5
Expires 40:19
explain 17:9
explained 17:11 18:16 19:6 24:11
explicitly 17:19
extent 10:13 21:19 21:22 22:6
e-mail 20:7 21:2,12
e-mails 20:15 21:10 21:13

F

face 9:25 10:1 16:13 27:6
facilities 4:22 5:12 10:12 34:24 35:2
facility 4:24 5:6,13 5:24
fact 3:22 26:6 32:20 32:22 34:12,22
factor 29:11,17,23
factors 30:3
fall 13:13
familiar 3:23 4:4 19:11
far 12:17 15:24 18:2
FCC 6:17 18:19 19:3,15
FCC's 19:11
feel 15:7
few 23:3
fight 22:14
figure 7:14,15,24
File 41:4
filed 6:2 10:25 11:4 27:3
find 20:18 22:11
finds 21:22
finish 15:9
first 3:3
five 23:5
fixed 33:6
flows 34:18
fluid 30:2
folks 24:19
followed 11:9
following 38:4 41:14
follows 3:4 33:11
foregoing 37:3,7 38:9 40:6
form 39:8
forth 3:24 7:8 23:14
found 6:10,19
frequent 22:23
from 5:14,15 12:12 14:5 23:4 25:13 27:2,6 28:18 31:7 32:25 34:5,25
frozen 29:23 30:1
full 3:8
FULTON 37:2
further 19:6 37:10

G

GA 2:7,16
Gallo 38:8,9,13 41:3
general 5:5 25:5,13
generally 4:13,23 5:4,9,17,21,24 10:21 20:15,16 24:22,25 29:19

Georgia 1:14 3:12 37:1 38:4,6
getting 5:15
give 7:25 8:11 35:24
given 16:22 37:9
gives 15:10
go 14:8 20:23 23:25 30:24
goes 34:25
going 6:9 7:5 8:4 13:2 15:17,20 17:6 21:1,12 26:24 29:11 30:14 32:3 34:4,5,23 35:4
good 3:7 8:13
Great 36:5
Group 1:3 30:7
guess 10:21 24:25 31:9

H

hand 33:17
handed 33:13
happened 22:10
happens 10:6
heard 4:8 5:2
hearing 7:15 37:9
hereof 39:5 40:9
high 10:21
him 16:8 17:17,20 18:1 22:2
his/her 40:7
hit 33:7
hundred 8:19

I

idea 7:23
impact 18:13
impacts 10:13
implementation 10:16
implications 10:9 17:21,23 18:3,12
impose 10:7
Inc 1:3,4,7 38:8,10 38:14 41:6
include 18:17
increased 10:7
indeed 15:24
independent 15:18
indicated 6:25 18:2 41:15
industry 4:10 19:13 24:5
information 18:7
inside 4:24
instance 26:23
insure 11:7 14:7 15:21 16:18 26:20
insuring 10:6
intended 31:17,20
intent 15:22,23
interconnection 3:24 4:1 6:13 7:10 9:23 10:10,11 11:8 12:24 20:1 20:12 21:4 24:16 25:8 27:7 28:24 28:25 34:17
interested 37:13
interLATA 17:1 18:21 23:16,18 24:2,5 25:11 26:9 31:21
internal 20:4,18 21:2,13
internally 14:11 35:3
Internet 12:5 13:8 13:16 19:2 23:24 30:10
interoffice 35:1
interpretation 20:20 27:4,4,10
interrelated 25:22 26:7,8
interrelationship 14:3,4
interstate 4:5 17:2 19:19
intraLATA 12:8 14:23 15:1 24:2 27:12,23 28:9 31:4,20,22,23 32:7,13 33:3 34:3 34:4
intrastate 4:5 19:19 27:17 29:21
involve 35:19
ISP 12:4 13:7,16,17 18:19 19:2,10,13 19:16 23:24 26:11 26:23
issue 11:6 22:18 24:20 25:3 33:17
issued 20:7
issues 10:16,24 11:18 13:10,23 15:19 19:4
i.e 4:14 26:11 28:7 31:3 34:23

J

January 1:12 3:2 41:8
Jeffrey 1:10 3:1,3 3:10 39:2 40:5,13 41:7 42:10 43:8
job 3:13 10:20
Judicial 38:3
July 21:6,24 24:21
jurisdiction 12:10 17:2 40:17
jurisdictional 25:11 25:13
jurisdictionally 18:20
just 3:8 5:18 8:14 8:16 12:13 15:8 18:25 20:3,25 21:8 25:5,17 26:4 33:18 34:6 35:8 35:13,24

K

kidding 15:11
kin 37:10
kind 10:22 16:11,12
King 1:10 3:1,3,7 3:10 11:15 21:9 21:10,19 28:1 35:24 39:2 40:5 40:13 41:7 42:10 43:8
know 4:16 7:1,4 8:8 10:18 12:3 13:2 14:1,10,12,15 15:18,19 16:2,12 17:1,15,19,23 18:11 23:6 24:14 25:6,12,15 26:25 27:24 29:25 30:9 30:13,19,22 32:4
knowledgeable 10:14
known 17:14

L

laid 13:25 16:2,9 32:11
language 6:10 10:2 14:18 15:17,23,24 16:19,23 17:5 18:17 20:9 23:14 25:21
lasted 23:4
LATA 13:1 15:3 16:13 18:22 26:14 26:24 28:18 32:18
lcecil@wcsr.com 2:9
LD 32:15 33:10,11 35:12
lead 5:9
leading 9:22
least 12:17
leave 8:12
led 10:1
Lee 1:16 38:19
Legal 2:13
less 29:17,22,25
let 12:12 13:4 14:11 30:18,23 31:10
Let's 20:23 33:21
level 10:21
like 26:22 33:14 35:13
likely 22:9
line 28:3 31:1 41:20 41:23 42:1,4,7,12 42:15,18,21,24 43:2
little 30:23,25
LLC 1:3
loads 31:10
local 3:14,18,21,24 11:20 12:7,9,18 12:19 13:9,13,21 14:6,14,20,23 15:4,25 16:6,12 16:13,16 17:16,24 17:24 18:3 20:1 21:3 22:19 23:19 24:3,6,10,20 25:12 26:12 27:5 27:13 28:19 29:6 29:7,10,16 31:15 32:12,14 34:1,18 35:6,14
long 4:16,18 22:21
look 8:16 15:11,17 20:14 27:25 35:24
looking 8:15
loop 28:22 33:5
LORETTA 2:3
lots 5:5
L-pic 31:25 34:9,17 35:10

M

made 22:20
major 16:21
make 9:15 10:15 12:25 15:11 17:6 20:22 21:11 27:19 31:11 38:4
makes 20:9 21:19
management 3:15 20:8,20 21:10
Manager 3:14
many 23:1
matter 38:9 39:3 40:7 41:12
may 26:12,22 32:22
maybe 8:1,15 32:4
mean 5:1,4 22:23 23:10,24 30:1 32:17
means 14:7
meetings 9:22 10:1 16:17 25:5
messages 4:21 7:2
might 36:3
million 9:6 35:22
minute 4:15,17
minutes 23:5,5,11 23:12 27:17 29:21
misrepresent 26:20 26:24
Mississippi 30:21
money 8:22,25 9:1 9:8
month 8:20
months 8:5,17
more 8:16
most 4:16
move 33:21
much 17:15
multiple 6:1 26:5
myself 20:16

N

name 3:8,10 41:16
nature 12:8 14:23 19:16 26:10
need 3:23 4:4 7:14 9:14 15:11 22:14 32:4
needs 10:14,15

negotiate 11:17
negotiating 24:24
negotiation 9:22 10:1
negotiations 21:16 21:16
net 35:12
network 10:3,6,8,12 10:22,24 16:21 17:7,10 32:21,21 33:11,11,19 34:13 34:25 35:3,10,13 35:15,17
never 16:22
new 11:20
next 19:5
Nicole 2:22
none 17:8
North 1:1 5:1 6:24 27:22 29:1
Notary 40:19
notes 19:24 35:25
nothing 10:6
number 5:7 14:2,3

O

object 21:7 30:14
obtain 11:8,10
obtained 20:12
obviously 5:13 9:19 14:1 15:17,20 16:10 18:11 20:8 20:14,17 23:23 24:23 32:1 33:5 33:18
October 8:1,3,6
off 14:16 20:23 33:13 35:12
offered 5:10
office 33:8,12
Off-the-record 20:24
Oh 12:1
Okay 11:3,12 12:1 14:25 19:15 22:16 29:5 31:9 34:8,11 36:2
once 12:21 14:3
one 14:2,6 20:16 26:4 31:14,16,17 31:18,23 32:7 33:2 34:1,2,24 35:11
one-on-one 25:4
only 10:25 14:22 17:3 22:12 26:8
opposed 30:11 35:11
order 19:13,16
organization 3:15 27:15
original 41:18
originate 28:22 35:16
originated 6:15 7:5 26:13 34:16
originating 28:17 31:24 32:3,24 33:8,8 34:19,20
other 13:10,23 14:22 15:1 18:1,2 18:6,8 21:2 24:19 30:11 35:14
others 24:12,14,15
Otherwise 15:10
out 5:10 13:25 16:2 16:9 31:11 32:12 39:4 40:9
outside 24:4
over 4:22 6:9 11:24 12:5 13:7,16 14:8 14:19 16:14,16 19:1 22:14 23:24 26:21 30:10 32:5 33:10,10,19
overall 11:5
overcharged 7:9 8:24 9:6
overhauls 16:22
own 19:20 28:22 35:12
O.C.G.A 38:12

P

page 6:8,9 7:13 11:22,23,25 18:15 23:21 24:8 25:19 27:25 28:16 30:24 39:4 40:9 41:20 41:23 42:1,4,7,12 42:15,18,21,24 43:2
pages 11:16 37:7
paid 8:24,25 9:8,13
parentheses 28:12
part 3:20
participate 9:21
parties 14:18 21:5 29:1,9 37:11,13 39:10
parts 17:16
party 15:18 34:19
pattern 31:19
pay 9:11 27:12 32:19 33:15,15 34:12 35:14
payments 14:21
Peachtree 1:13 2:5 2:14 3:11
Peacock 11:19 12:2 12:15,25 13:6,18 13:20 15:14,20 16:6 17:4,9 18:16 18:23 19:6,25 20:3,11 22:19 24:9,11 25:20 26:1
peer 24:23
pending 11:19
per 4:17 12:9 19:19 23:22 34:17
period 22:1
person 11:3
personally 40:4
perspective 25:14 28:4 35:8
phone 4:18
phrase 32:23
Phyllis 1:16 38:19
pic'd 28:8 31:4 32:6 32:13,14
pin 12:13
place 4:2 10:9 16:24 26:6 39:4 40:8
plan 7:19
play 31:11
please 3:9
PLU 29:2,5,11,17 29:23 30:3
Plus 31:16,18,18,23 32:7 33:2 34:1,2 34:24 35:11
point 5:14,14,15,16 7:17 35:4
points 5:25 6:1 32:18 34:5
policies 11:9
policy 10:22 25:14
port 33:5
position 23:13 25:7 25:16 28:3
precisely 6:18,23
present 2:20 24:17 24:25
previous 34:7
pricing 27:15
prior 20:22 22:3,25 24:19,20 25:3
privilege 22:6,12
privileged 22:13
probably 5:15 8:15 20:6
problem 13:3
proceeding 11:1
process 9:11
produce 21:2
products 16:16 27:19
prohibited 38:12
proposed 11:20 13:21 17:6 25:21
protect 18:18
protocol 12:5 13:8 13:16 30:10
prove 26:22
provide 9:20 10:15 18:6 21:20,21 29:2
provides 5:25 6:14
provision 10:16
provisions 15:15
Public 40:19
purchase 28:17
pure 5:16
purpose 18:7
purposes 25:11,13
Pursuant 38:1
push 15:20 16:5,7
put 16:11,13,15 28:3 35:8
P-I-C 28:8
P-55 1:5 5:1
p.m 1:12

Q

qualify 23:22
question 15:9 21:8 30:15,18 32:5
questions 18:1 36:3 37:5
quote 6:14,18 23:15

R

rate 27:11,13 32:19 34:11
rates 3:23 35:15,15 38:15
rational 24:10
RE 41:3
read 11:15 39:10 41:11,13
reading 15:15
reads 24:1
really 11:24
Reason 41:22,25 42:3,6,9,14,17,20 42:23 43:1,4
reasonable 21:11 21:23
reasons 41:15
reassurance 16:25
reassured 15:23 18:13
reassuring 20:8,10
rebuttal 6:5 9:16 11:12,14 16:10 24:8 25:19 28:1
recall 9:25 17:17 18:22 25:2
receive 31:6
received 24:6
recess 36:1
recip 33:15
reciprocal 9:2 14:20 27:13
recollection 23:8
record 3:9 15:12 20:23 21:1 41:15
reduced 37:6 39:8
refer 4:12 28:13
referring 19:8 28:13
regarding 16:6 18:3 19:16
Regulations 38:2
relate 21:3
related 13:22
relates 23:16
relative 19:24
relatively 33:6
relayed 20:19
remainder 33:16
remand 19:13
report 38:8
reported 30:4 37:4
reporter 38:7 39:7 41:10
reporter's 15:6
Reporting 38:3
represent 31:18,20

37:7
representative 38:7
request 21:1 41:13
requested 39:6
require 17:6
resolution 10:16
resolve 13:10
respect 12:17 25:9
Respondent 1:8
response 17:22 24:1
responsibilities 3:16,20
responsibility 10:5 11:5 18:12 29:2
responsible 3:17 27:18 34:19
result 13:10 16:23 21:16 37:14
retail 27:11,18,22
return 14:15
returns 31:5
reverse 33:23
review 21:13,23
revisions 9:15
Rice 2:4
right 5:23 7:11 8:2 8:25 9:7 11:1 12:1 13:19 15:21 18:25 24:1 28:19 31:13 31:14 33:24
rough 8:14
Roughly 8:21
route 9:2 35:11
routed 33:10
RPR 1:16
Rules 38:2

S

same 15:10 20:19 26:13,21 29:20 32:16,18 34:5,6 35:4 39:7 41:13
Sandridge 2:4
sat 10:1
says 6:10 7:3 16:11 16:19 26:16 28:3 29:15
scenario 30:24 32:11
scenes 11:7
schedule 19:20
scheme 19:22
se 12:9 19:19
search 20:22 21:11 21:19 22:2
second 6:13 7:10 9:23 21:4 25:7 27:6 28:25 35:24
section 6:11,19 23:15 25:21,22 26:19
sections 26:7
see 6:20 7:3 11:21 12:1 18:13 20:17 21:11 24:12 28:4 28:9 31:7 36:5
seeing 16:10
send 14:16
sense 23:10
sensitive 4:14,20
sent 20:15
sentence 19:5 28:1
separate 19:22
September 8:5
service 31:4
services 3:15,18,19 3:22 28:9
set 3:23 23:14 39:4 40:8
sets 7:8
Sheet 41:1,16
Shiroishi 2:21
Shore 2:12 5:22 7:22 8:7,13,18 20:21,25 21:8,18 22:3,11,17 30:17 35:23 36:2,5
short 36:1
side 11:15 27:16
sign 39:11
SIGNATURE 43:7
signed 9:24 18:24 21:17 41:16
since 23:1
sitting 8:8 23:8
smee 10:22
some 27:23 30:15 36:3
something 4:14,15 5:9 16:24 26:25
somewhat 30:1
sort 27:23
Southern 1:3
speaking 7:4
specific 9:25 10:24 17:1 19:23
spills 11:24
start 9:14 28:2 32:5 33:4
starting 31:1
starts 11:23
state 3:8 6:17 18:18 28:17 37:1 40:2
stated 37:4
states 1:3 30:11,12 40:6
statewide 30:4
stayed 18:22
still 7:19 14:23 19:3 20:13 23:24 29:20 34:2
straight 13:4
straightforward 12:20,21
Street 1:13 2:5,14 3:12
Sub 1:5 5:1
subject 16:4
SUBSCRIBED 40:15
substance 26:1
suggest 16:20
Suite 1:14 2:6,15
support 10:12
sure 5:16 15:11 20:6,7 23:1 31:11
surprised 17:13
switch 28:22
switched 4:5 5:2,4,6 5:6,8,10,11,12,19 6:16,19 12:21 14:8,13,19 16:1,3 16:4 17:3,12,15 17:24 24:2 28:18 33:19,20
switching 4:18 33:9
sworn 3:4 40:6,15
synonym 5:17
synonyms 5:12
systems 8:3

T

take 3:22 5:13 8:16 12:12 16:12,24 19:24 22:22 32:2 33:22
taken 26:5 39:3,7 40:7 41:12
takes 16:14
taking 32:15,24 35:12 38:10
Talbot 10:18
talk 24:18 30:23
talked 30:25
talking 9:3 20:4 25:2
tariff 5:10
tariffs 4:2,6
TCG 1:4
team 24:16,24
technically 19:18 26:22
telecommunicatio... 1:7 4:9,22 41:6
Teleport 1:3
tell 5:18 12:2 13:20 22:12 26:1
telling 12:15 17:17 18:23
term 4:8,9 5:2
terminate 27:14 33:16 34:13 35:16
terminated 6:15 7:6 26:13 30:20
terminating 30:10 33:12
termination 34:20
terms 5:5 23:22
testified 3:4 10:23 11:16 18:8
testimony 6:2,8,10 7:7,13 8:23 9:4,16 11:4,14 12:12 13:5 14:1 16:3 18:10,15 23:15,21 24:9 27:3
their 19:20 27:19
thereto 37:6
things 20:22 26:9
think 6:8 8:1,3,5,12 11:12 16:9 19:12 23:14 35:23
third 15:7 28:2
though 18:21 26:12 26:21
thousand 8:20
through 6:16 7:11 9:5 20:10,12 32:16 35:1,25
tie 19:1 30:15
time 7:17 15:7 17:10,18 21:5 22:1,3,25 24:19 24:20 39:4 40:8
times 24:24
title 39:4 40:9
today 8:12 10:9 15:7 18:9 23:9
told 13:18 15:14 17:8
toll 27:11,12,23 35:3
tomorrow 9:20
top 11:24 28:16
total 29:21
tracking 8:19
tracks 6:18,22
traffic 4:9,13,14,21 4:23 6:19 7:1,4 11:20 12:4,5,7,9 12:18,19 13:7,8,9 13:13,17,21 14:6 14:10 15:4,25 16:1,3,6,14,16 17:1,2,3,24,25 18:3,20,21 19:7,9 19:10,17,23 20:1 21:4 22:20 24:10 26:16,17,21 27:5 28:19,22 29:6,10 29:16 34:19 35:6
transcript 37:4,8 38:15 39:11 40:6 40:10 41:11,18
transpired 36:1
transport 5:25
transported 4:22
treated 12:9 14:24 25:11 26:12 35:13
treatment 14:14
treats 4:19
true 30:3 37:8 40:10
trunk 4:24 30:6
trunks 26:21 33:10
try 7:17 15:10 31:10
trying 6:23 11:7 12:14
turn 6:7
two 5:25 8:5,16 11:18 12:22 13:10 13:22 14:3 23:11 26:7 31:10 32:16 32:17 34:5
type 14:14 17:2 19:23 20:18 26:16 26:21 31:15 33:25
types 13:12,14,15 14:5,12

typewriting 37:6
typewritten 39:8
typically 18:21

U

Uh-huh 6:6,21 10:19 24:13 28:5
unbundled 35:15
under 7:10 13:13 27:9 28:24 29:16 29:17 37:6 38:11
understand 27:2 31:9,11
understanding 5:19 12:13 14:17 15:1 15:5,21 27:9
understood 25:10 25:16
UNE 35:14
UNE-Local 33:9
UNE-P 28:6 31:2,6 31:12 32:9,12,21 32:22,25 33:5,25 34:23 35:5,9,19
units 14:11,16 27:18
unless 30:15
unresolved 11:18
update 7:14,16,19 8:1,4 9:20,20
updated 7:15
usage 4:19
use 4:15 14:12 17:23 35:10
used 4:9
user 33:7,17
uses 28:8 31:4
using 17:12,14 28:21 32:20 34:13
usual 38:14
UTILITIES 1:1

V

vary 23:7
very 11:23 15:12
via 25:5
viewed 25:12
virtue 32:21
voice 12:5 13:7,16 19:1 23:23 30:10
VOIP 25:9 26:11 30:20
VOIP/ISP 26:20
vs 1:6 41:6

W

wait 15:8
want 12:25 13:8 20:25 22:2 32:2 33:22 35:2
wanted 18:17 25:10
wanting 12:6
way 12:7 22:20 23:25 28:2 30:15 32:11,23 33:17
ways 5:8 23:25
Wednesday 36:6
well 3:18 6:25 7:20 8:2 9:18 11:5 12:3 12:19 13:24 14:2 16:10 17:11 19:2 23:3,4 26:3 32:11 33:4
went 14:19 33:19
were 4:18 12:9 14:23 17:12,14 18:25 22:7 23:3 24:22,24 26:7,7,9 26:25 29:9 35:9 37:6
West 1:13 2:5,14
we'll 22:14
we've 8:3 13:6
whichever 32:2
while 11:18 19:3
whoever's 10:15
wholesale 21:13
wide 13:1 16:13 28:18
win 26:13
witness 7:21 8:2,14 10:25 21:24 22:9
Womble 2:4
work 3:10 24:5

Y

Yeah 32:6
years 16:14
y'all 20:21

$

$2 35:21
$2.3 9:6
$90,000 8:15

1

1:49 1:12
100 8:15
11 6:8,9
12 6:9 27:25 30:24
1200 3:11
1201 1:13 2:5
13 28:16
1376 1:5 5:1
16 7:13

2

2 9:4
20 1:12 3:2 41:8
2000 21:25
2001 19:12 21:6,24
2002 7:11 9:5
2003 1:12 3:2 40:16 41:8

3

3 6:11,20
30 23:11
30309 2:7 3:12
30375-0001 2:16
335-0765 2:17
3500 1:14 2:6
3587 41:4

4

404 2:17
404)888-7437 2:8
4300 2:15

5

5 11:16,22,24
5-14-37 38:12
5.3.1 6:11 23:15 25:23
5.3.3 6:20 25:21 26:16

6

6 11:16,25
675 2:14

7

7 18:15

8

8 28:3
8(B) 38:2
80 8:15

9

9 23:21 24:8 25:19 31:1

ORIGINAL TRANSCRIPT

BEFORE THE
NORTH CAROLINA UTILITIES COMMISSION

AT&T Communications of
the Southern States, LLC,
Teleport Communications Group, Inc.,
and TCG of the Carolinas, Inc.,

Complainants,

DOCKET NO. P-55, Sub 1376

vs.

BellSouth Telecommunications, Inc.,

Respondent.

DEPOSITION OF

BILLY C. PEACOCK

January 20, 2003
12:11 p.m.

1201 West Peachtree Street
Suite 3500
Atlanta, Georgia

Phyllis A. Lee, CCR-B-2321, RPR, CSR(IL), CRR

FLORIDA PUBLIC SERVICE COMMISSION
DOCKET NO. 020919-TP EXHIBIT NO. 6
COMPANY/ WITNESS. NCUC - Depo. of B. Peacock
DATE: 5-07-03

Alexander Gallo Associates, Inc.
COURT REPORTING VIDEO SERVICES

• ATLANTA'S TECHNOLOGICAL LEADERS IN LITIGATION SUPPORT •

ATLANTA, GEORGIA WASHINGTON, DC CHICAGO, ILLINOIS NEW YORK, NEW YORK

Telephone (404) 495-0777
Facsimile (404) 495-0766
Toll Free (877) 495-0777

Complimentary Conference Rooms
Throughout Georgia And
Major Cities Nationwide

500 The Candler Building
127 Peachtree Street
Atlanta, Georgia 30303

www.galloreporting.com

1 APPEARANCES OF COUNSEL

2 **On behalf of AT&T:**

3 LORETTA A. CECIL, ESQUIRE

4 Womble Carlyle Sandridge & Rice

5 1201 West Peachtree Street

6 Suite 3500

7 Atlanta, GA 30309

8 (404)888-7437

9 lcecil@wcsr.com

10

11 **On behalf of BellSouth:**

12 ANDREW D. SHORE, ESQUIRE

13 Bellsouth Legal Department

14 675 West Peachtree Street

15 Suite 4300

16 Atlanta, GA 30375-0001

17 (404) 335-0765

18 andrew.shore@bellsouth.com

19

20 **Also Present:**

21 Beth Shiroishi - BellSouth

22 Nicole Bracy - BellSouth

23

24

25

1 **Deposition of Billy C. Peacock**

2 **January 20, 2003**

3 ***BILLY C. PEACOCK***, being first duly

4 sworn, was examined and testified as follows:

5 **EXAMINATION**

6 **BY-MR.SHORE:**

7 Q. Mr. Peacock, good afternoon. Could

8 you state your full name and your business

9 address, please?

10 A. My name is Billy C. Peacock. My

11 work address is P. O. Box 6994, Douglasville,

12 Georgia, 30154.

13 Q. Okay. That Douglasville address, I

14 take it you work out of your home?

15 A. Yes, I do.

16 Q. Have you ever been deposed before?

17 A. I have not.

18 Q. I'm sure Ms. Cecil has told you how

19 these things work.

20 A. She has.

21 Q. But let me be, you know, clear.

22 You are also sworn to tell the truth, so it's

23 important that if you don't understand my

24 question or you need me to repeat it, please

25 ask me to do that. Otherwise, if you need to

1 take a break to run to the restroom or for any
2 other reason, let me know.
3 A. Thank you.
4 Q. I'll be happy to do that.
5 A. Thank you.
6 Q. You've got the testimony in front of
7 you that you filed in North Carolina Docket P-55
8 Sub 1376 on January 17th of this year?
9 A. Yes, I do.
10 Q. Okay. Who wrote your testimony?
11 A. After lengthy discussions with Ms.
12 Cecil, the first draft was typed by Womble
13 Carlyle and provided to me for review and
14 modification. And I made modifications to the
15 document and sent back to Womble to have those
16 modifications inserted.
17 Q. I take it then, when you say after
18 lengthy corroboration, you got together and sort
19 of told Ms. Cecil that information, and she or
20 someone in her office put that in testimony
21 format?
22 A. That's exactly right.
23 Q. And did you collaborate with Jeff
24 King?
25 A. Yes.

Q. Regarding your testimony?

A. We had discussions of the events that led up to the need for the testimony, so the answer would be yes.

Q. Okay. Did you collaborate with anyone else?

A. No.

Q. Okay. Did you collaborate with Ms. Stevens?

A. On my testimony, no.

Q. Tell me about your discussions with Mr. King. First, when did those take place?

A. Regarding the testimony?

Q. Yes, sir.

A. After the drafts were presented to us for the typing from Womble Carlyle, we would have reviewed each other's drafts for consistency.

Q. So I take it, then, that Ms. Cecil's law firm prepared Mr. King's first draft as well, or is that not what you were necessarily saying?

A. I don't have a totally accurate answer. I would make a guess --

Q. I don't want you to guess.

1 MS. CECIL: If you know.
2 THE WITNESS: I do not know.
3 BY MR. SHORE:
4 Q. And that's why I phrased the
5 question the way I did?
6 A. Okay.
7 Q. I don't want you to guess. Just
8 tell me what you know today.
9 A. Okay.
10 Q. I think you said that you and Mr.
11 King reviewed each other's first drafts for
12 consistency?
13 A. Not first drafts, his later and his
14 testimony when it was more complete, I reviewed
15 his.
16 Q. And did you -- and for consistency
17 purposes, is that what you said, for
18 consistency?
19 A. Or to -- well, it would have been
20 consistency for dates, et cetera. You know,
21 facts that we wanted to make sure that we were
22 both correct on.
23 Q. Okay. Consistency, you mean, with
24 your testimony?
25 A. Consistent with, again, facts

1 regarding what we greed to as far as dates or
2 issues.
3 Q. And did you find anything in Mr.
4 King's testimony that you needed to talk to him
5 about that was --
6 A. No.
7 Q. -- inconsistent?
8 A. No, we were right on board with each
9 other.
10 Q. Did you make any suggestions to Mr.
11 King about revisions to his testimony?
12 MS. CECIL: If you know.
13 BY MR. SHORE:
14 Q. Well, you certainly know whether or
15 not you made suggestions.
16 A. They would not have been substantive.
17 They would have perhaps been typos and spelling,
18 et cetera.
19 Q. Did Mr. King make any substantive
20 suggestions to you --
21 A. No.
22 Q. -- about your testimony?
23 A. No.
24 Q. Don't take this personally, because
25 we did this in the first deposition this

1 morning, Mr. Peacock. But for the court
2 reporter's benefit, if you would wait until I
3 get done asking my question before you give me
4 your answer, and I'll try my best -- and I'm
5 not very good at this -- to wait until you get
6 done with your answer before I start my next
7 question.
8 A. I understand.
9 Q. We're going to have a lot cleaner
10 transcript and make her job much easier.
11 A. And that's important.
12 Q. Who prepared the exhibits to your
13 testimony?
14 A. Womble, under my direct control and
15 supervision.
16 Q. Okay. What did you do to control
17 and supervise?
18 A. Determine what would be the exhibits,
19 made suggestions about what the exhibits should
20 be and the text in the form of the exhibits.
21 Q. And after Ms. Cecil's law firm
22 prepared those exhibits, I take it they would
23 send them to you to review?
24 A. Yes.
25 Q. Did you make any changes or

1 modifications of a substantive nature to any of
2 those exhibits?
3 A. No.
4 Q. Do you have any corrections or
5 revisions or changes to any of your testimony or
6 exhibits?
7 A. There is a typographical error on
8 page 22 line 24. It says, "section." It
9 should say second.
10 Q. Okay, thank you. Any others?
11 A. No.
12 Q. I want to talk very briefly, I
13 think, I guess that depends on your definition
14 of very briefly, about your background and jobs
15 and your career.
16 A. Certainly.
17 Q. What's your job now?
18 A. District Manager Local Services and
19 Access Management.
20 Q. And when did you start that job?
21 A. March of 1999.
22 Q. Who was your boss when you started
23 that job?
24 A. Michelle Augier.
25 Q. You better spell that for the court

1 reporter.
2 A. A-U-G-I-E-R.
3 Q. And who is your boss today?
4 A. Denise Zalis, Z-A-L-I-S.
5 Q. And during the period you have been
6 in that job, have you had any other bosses,
7 report to anyone else other than those --
8 A. Yes.
9 Q. Okay.
10 A. Prior to Ms. Zalis, I reported to
11 Greg Terry, T-E-R-R-Y.
12 Q. Did Mr. Terry change jobs?
13 A. The -- no, he did not. The
14 negotiating organization within AT&T moved from
15 regional reporting to national reporting.
16 Q. Prior to March of 1999, when you
17 assumed your current job, what was your job?
18 A. I was a regulatory manager within
19 Law and Government Affairs. I think prior to
20 this assignment I was doing Florida regulatory
21 advocacy.
22 Q. Were you located in Atlanta or
23 Florida?
24 A. In Atlanta.
25 Q. And what were your responsibilities

1 in that job?

2 A. Insuring that all of the procedural

3 requirements of the Florida Public Service

4 Commission were followed in the proceedings that

5 we were involved in, drafting, proofing

6 testimony, working with the Florida staff on

7 issues that were important at the time.

8 Q. Was that the same as docket manager?

9 A. It's very similar to docket manager.

10 Q. But was there also someone that had

11 the docket manager job in Florida?

12 A. No.

13 Q. Okay. How long were you in that

14 job?

15 A. A little over a year.

16 Q. What job were you doing prior to

17 being a regulatory manager?

18 A. I was also a regulatory manager for

19 the state -- states of Alabama and Mississippi,

20 prior to that, doing the same work.

21 Q. And how long did you do that, do

22 those states or were responsible for those

23 states?

24 A. Two years.

25 Q. How about before that?

A. I was in Mississippi as the state manager with responsibility for customer marketing and was in that job for a year.

Q. Okay. Prior to that?

A. Prior to that I was in Baton Rouge, Louisiana. I was an assistant state manager with both legislative and regulatory advocacy responsibilities. I was a lobbyist with AT&T in the Louisiana Legislature, and also advocated before the Louisiana Public Service Commission on AT&T's behalf.

Q. And how long were you in that job in Louisiana?

A. Four and a half years.

Q. You an expert in Network Architecture?

A. I am not an expert in -- no, I am not an expert in Network Architecture.

Q. Now, am I correct in understanding that you led the AT&T team in its Interconnection Agreement negotiations with BellSouth for North Carolina and all other BellSouth states leading up -- well, starting in 1999 --

A. Yes.

1 Q. -- when you assumed your current
2 position?
3 A. Yes.
4 Q. Was that job you took in 1999, your
5 current job, was that a promotion from your
6 regulatory manager job or a lateral?
7 A. A promotion.
8 Q. Have you been promoted since then?
9 A. No.
10 Q. Did you lead the negotiations between
11 AT&T and BellSouth leading up to their execution
12 of the Interconnection Agreement for Mississippi
13 signed in March of 2001?
14 A. Yes.
15 Q. In your testimony you state that Mr.
16 King, Jeff King was not part of the AT&T
17 negotiation team with BellSouth, is that right?
18 A. No, that's not correct, not exactly.
19 Mr. King was a subject matter expert and a
20 client that was consulted during the negotiations
21 with BellSouth on issues that he had a subject
22 matter expertise in, and was basically one of
23 the clients that I discussed the negotiations
24 with.
25 Q. Did Mr. King attend any of the

negotiation meetings and sessions with BellSouth in 2001?

A. Not prior to the filing of the North Carolina ICA.

Q. Not prior to the time you all reached an agreement, is that what you mean by that?

A. Not before we executed the North Carolina contract.

Q. When I refer to negotiating meetings and conference calls, I'm going to use that to refer to the time before you all executed the second -- what y'all refer to as the Second Interconnection Agreement.

A. I'm sorry, say that again.

Q. When I talk about the negotiations --

A. It's prior to that?

Q. Prior to, I think, July 19, 2001.

A. Okay.

Q. And during the course of your negotiations with BellSouth in 2001, I take it you had occasion to negotiate with Ms. Shiroishi from BellSouth?

A. Yes.

1 Q. I want just to understand here on
2 the record -- not me, but I want the record to
3 be clear as to sort of how the parties
4 typically negotiated items to include in their
5 Interconnection Agreement.
6 Would it be fair to say that a
7 party would propose language, put it in writing,
8 send it to the other party, and that party
9 would either accept it, reject it, or modify it
10 in some way to try to reach common ground?
11 A. Yes. The parties would redline
12 existing language. Meaning we would highlight
13 any of our proposed changes that we wished
14 BellSouth to consider. And BellSouth would do
15 the same, they would highlight or redline new or
16 changed language that it may wish for AT&T to
17 consider.
18 Q. And you all kept an agreement going
19 back and forth that would reflect things that
20 you would agreed to maybe prior to the
21 negotiations and sort of stay current with
22 things that you had agreed to previously, and
23 then as other issues were being added, is that
24 a fair characterization?
25 A. Yes. BellSouth was serving as the

1 keeper of the document, the party responsible
2 for maintaining the contract language. So they
3 were actually making the changes based on our
4 discussions, and then sending us back what they
5 believed was the language that had been agreed
6 to by the parties.
7 Q. And I take it, you would then review
8 it. If you had an issue or problem, you would
9 let BellSouth know about it?
10 A. Yes.
11 Q. Did you ever have occasion to
12 contact Ms. Shiroishi at her home during the
13 course of negotiating with her?
14 A. Yes.
15 Q. Okay. How many times?
16 A. Only once, that I remember.
17 Q. Okay. And tell me why you did
18 that?
19 A. We were preparing to finalize or
20 were in the final stages of negotiating the
21 contract language to be executed in North
22 Carolina and there remained some questions about
23 the final language.
24 Q. Did you tell Ms. Shiroishi during
25 that call that you had to make a decision with

1 respect to a certain issue, that you didn't
2 really understand it, and what did Ms. Shiroishi
3 advise you to do?
4 A. I don't remember -- no, I do not
5 remember having that discussion or saying that
6 with Ms. Shiroishi. I remember discussing
7 contract language that was before us and that
8 was to be filed in the ICA.
9 Q. Do you remember what that particular
10 contract language was or what the issue was?
11 A. One of the issues would have dealt
12 with the definition of switched access traffic.
13 There may have been others that were still open
14 and pending prior to the execution of the
15 contract.
16 Q. Do you remember what you said to Ms.
17 Shiroishi during that call regarding --
18 A. I asked her for a definition --
19 sorry.
20 Q. -- regarding the definition of
21 switched access traffic?
22 A. Yes, I do. I asked her to define
23 switched access traffic for me. And my
24 remembrance is that the language that she gave
25 me exactly tracked what was in the definition of

1 switched access in the ICA.
2 Q. IC --
3 A. Interconnection -- I'm sorry, in the
4 contract.
5 Q. Well, you can say ICA. I just want
6 to let the record reflect what you are referring
7 to, Interconnection Agreement?
8 A. Yes.
9 Q. And why were you asked Ms. Shiroishi
10 about the definition of switched access traffic?
11 A. Again, we were in the final stages
12 of negotiating the contract language and
13 BellSouth had been very concerned about AT&T
14 perhaps putting forth other forms of traffic to
15 be compensable by reciprocal compensation rates.
16 And we were discussing what those other access
17 services might have been and whether or not AT&T
18 would take a position that we believed other
19 access services should be compensable or not
20 with recip comp rates.
21 Q. Can you tell me, to your
22 recollection, when you called Ms. Shiroishi at
23 home with the final stages of the negotiation,
24 and exactly what you said to her regarding
25 switched access traffic?

1 Did you just ask her, as you said a
2 minute ago, to define switched access traffic,
3 or did you preface it with some explanation?
4 A. The preface would have been, you
5 know, we're in the last stages of negotiating,
6 there is still some questions that I have
7 regarding, you know, switched access traffic and
8 how that's defined. That would have been the
9 preface.
10 Q. And then she, I think you just
11 testified, essentially read you the definition
12 from the contract?
13 A. I believe that's what she did. It
14 tracked -- the answer she gave me tracked the
15 language in the definition of switched access in
16 the contract.
17 Q. Do you recall asking her about how
18 certain traffic would be compensated or was it
19 just, as you testified, how do you define
20 switched access traffic?
21 A. (No response).
22 Q. In other words, did you explain to
23 her that you were asking about switched access
24 traffic because you wanted to be clear on
25 compensation issues, or did you just ask her,

1 hey, define switched access traffic?
2 A. It would have definitely been how
3 the traffic would be compensated for.
4 Q. Do you recall what you said to her
5 in that regard?
6 A. Again, the preface would have been,
7 switched access traffic is compensated at
8 switched access rates. Anything that is not
9 defined as switched access traffic would be
10 compensated at recip comp rates.
11 Q. Is it your testimony you recall
12 saying that to her or something substantively
13 identical --
14 A. That would have been a part of the
15 discussion.
16 Q. And was Ms. Shiroishi's response
17 anything other than, according to your testimony,
18 to give you the definition of switched access
19 traffic as it appears in the agreement?
20 A. Yes.
21 Q. Now, a few times when you told me
22 about this conversation you said, I think your
23 words were, that would have been a part of it.
24 I just want to be clear for the record
25 purposes, is it your recollection that that was

1 part of it?
2 A. Yes.
3 Q. And you recall saying that and are
4 prepared to swear under oath that you recall
5 saying that?
6 A. I am.
7 Q. Okay. And you testified earlier
8 that you didn't recall telling Ms. Shiroishi
9 that you didn't understand an issue, but yet you
10 were confronted with having to make a decision.
11 Are you denying making that
12 statement, or is it your testimony you just
13 don't recall making that statement?
14 A. I did not make that statement.
15 Q. Now, you state in your testimony, I
16 think on page 6, that AT&T was attempting to
17 get a LATA wide definition of Local Traffic
18 since 1996. Do you recall that?
19 A. Yes.
20 Q. How do you know that was AT&T's
21 objective in 1996?
22 A. I was employed with AT&T in '96 and
23 involved in the regulatory advocacy. I would
24 have been familiar with policy papers that AT&T
25 had published and internal discussions.

1 Q. Do you know whether or not the first
2 Interconnection Agreement between AT&T and
3 BellSouth of North Carolina had a LATA wide
4 definition of Local Traffic?
5 A. It did not have a LATA wide
6 definition of Local Traffic.
7 Q. Do you know whether or not the
8 parties arbitrated that issue in the first
9 agreement back in '96/'97 time frame?
10 A. I was not a part of the arbitration
11 in that time frame, so I don't know.
12 Q. Now, you state in your testimony,
13 it's on pages 6 and 7, I don't know that you
14 need to refer to it, but you certainly can --
15 A. Okay.
16 Q. -- that BellSouth agreed before AT&T
17 filed its arbitration petition regarding the
18 Second Interconnection Agreement that all
19 intraLATA traffic would be treated as local for
20 compensation purposes, correct?
21 A. Yes.
22 Q. What's the basis for that statement,
23 that BellSouth agreed to that?
24 A. The Mississippi contract language
25 provides that all traffic that terminates or

1 originates and terminates in a LATA is local.
2 The parties had also in the preliminary stages
3 of beginning our negotiations had an agreement
4 that we would negotiate on a non-region basis.
5 And that if we came to an agreement on an
6 issue for one state, that we would implement
7 that same language in the other states.
8 Q. Did the parties ultimately sign a
9 non-state agreement in the second go around
10 regarding the second interconnection agreements?
11 A. The language -- no, we did not sign
12 a non-state agreement. We used the language as
13 we went from arbitration to arbitration to build
14 and modify the language based on the arbitration
15 decisions.
16 Q. Are there differences in the
17 agreements between BellSouth and AT&T regarding
18 the second agreements from state to state?
19 A. If a state specific order or rule
20 caused us to need to have differing language, we
21 would. The parties did negotiate a settlement
22 agreement related to Point of Interconnection
23 that was applied to all the states, I can say
24 that.
25 Mississippi was a negotiated

1 arrangement that was kind of a stand alone
2 arrangement done prior to, because we didn't
3 want to arbitrate in Mississippi. So we have
4 one set of language in Mississippi, then we have
5 other sets of language similar in the other
6 states -- identical in the other states.
7 Q. Other than what you have testified
8 to already, any other basis for your testimony
9 that AT&T and BellSouth had agreed on the
10 definition of Local Traffic prior to AT&T filing
11 its arbitration petition in North Carolina?
12 A. Other than that's what was filed in
13 the arbitration petition, as well as what was
14 filed in Mississippi and agreed to and executed,
15 no.
16 Q. Is it your testimony that what was
17 filed by AT&T in North Carolina is the same
18 language that was in the Mississippi Agreement?
19 A. Word for word identical?
20 Q. Yes, sir.
21 A. No, I don't believe it is.
22 Q. Okay. What were the differences?
23 MS. CECIL: Do you have those
24 agreements so he can look at them?
25 MR. SHORE: Yeah, but I just want

1 to know if he knows from memory.
2 MS. CECIL: If you don't know from
3 memory --
4 THE WITNESS: I'd really rather read
5 the language. But the intent was the same,
6 even if the words were different.
7 BY MR. SHORE:
8 Q. Now, on page 10 of your testimony,
9 you say, "The parties eventually resolved their
10 dispute regarding the treatment of ISP traffic
11 by agreeing to implement the FCC's -- I think
12 it's April 27, 2001 -- ISP order on remat
13 right?
14 A. Yes.
15 Q. And you say the language reflecting
16 that agreement was reflected in Section 5.3.1.1
17 of Attachment 3, right?
18 A. Yes.
19 Q. Down there at the bottom of page 10.
20 And then you quote that section of
21 the party's agreement page 11, spilling over to
22 page 12.
23 Now, I want to focus your attention
24 on the part of Section 5.3.1.1 that you have
25 quoted, starting on page 12 line 3. And it

1 starts, "Additionally, the parties agree." Do
2 you see that?
3 A. I do.
4 Q. Through the end of that paragraph.
5 Can we agree that that sentence that
6 starts additionally, is the parties' agreed to
7 definition of Local Traffic?
8 A. There is no true definition of Local
9 Traffic in the ICA. This language sets out
10 what would be considered Local Traffic, but
11 again there is no true definition of Local
12 Traffic in the Interconnection Agreement.
13 Q. So this language starting in this
14 sentence beginning additionally, sets out what
15 the parties would pay intercarrier compensation
16 for local rates?
17 A. Yes.
18 Q. In other words, reciprocal
19 compensation or the agreement, is that fair?
20 A. Yes, I would agree with that.
21 Q. Now, is it your testimony that that
22 sentence we talked about beginning "additionally"
23 was part of the parties' resolution of the ISP
24 traffic issue?
25 A. No, not the resolution of the ISP

1 issue. But the language was negotiated at
2 around the same time that we were finalizing the
3 language that we would use as place holder
4 language for ISP, to implement the ISP order.
5 Q. On pages 12 through, I think it's,
6 14 of your testimony, if I understand correctly,
7 you say that definition of Local Traffic in
8 5.1.1.1 was also put in as part of the parties'
9 agreement regarding voice over Internet protocol
10 calls. Do I understand that correctly?
11 A. Yes. In the arbitration petition
12 that AT&T filed in North Carolina, there were
13 several disagrees that dealt with the
14 jurisdictional nature of traffic. And also
15 language in a disagree that -- where BellSouth
16 was concerned about other access services being
17 put forth as appropriately compensated by
18 reciprocal compensation rates.
19 And the two things that come to mind
20 together are the ISP -- the two issues that
21 were discussed were ISP and voice over IP.
22 Q. Is it your testimony that the
23 sentence we're looking at in 5 -- I think I've
24 been saying 5.1.1.1. I mean to be saying
25 5.3.1.1. But it's the sentence, "Additionally,

1 the parties agree," that you quote on page 12.
2 Is it your testimony that that sentence was put
3 in as part of the parties' resolution of the
4 voice over Internet issue?
5 A. The language was -- let me go back
6 and say no. The language was included through
7 the negotiations to deal with not just voice
8 over IP, but the issue of any other access
9 services that AT&T or another CLP in North
10 Carolina would suggest to BellSouth should be
11 treated as local for reciprocal compensation
12 purposes.
13 Q. When you say on page 14 of your
14 testimony lines -- starting on line 3, you say,
15 "Thus, when it came time to draft language
16 relative to these issues," you see that? I got
17 to get you a hole puncher, it's a lot easier.
18 A. Yes, I do see that. That's when it
19 came time.
20 Q. When you say, "these issue" there,
21 are you referring to the ISP and voice over
22 Internet traffic issues?
23 A. Yes.
24 Q. And then you say there that, "When
25 it came time to draft language relative to those

1 issues, BellSouth eventually also proposed the
2 following language in Section 5.3.1.1 of
3 Attachment 3."
4 And then you quote the "additionally"
5 sentence we've been talking about, right?
6 A. Yes.
7 Q. Is it your testimony that after the
8 parties agreed on the ISP traffic issue, how to
9 deal with that, and agreed on how to deal with
10 the voice over Internet traffic language, that
11 BellSouth then proposed the Local Traffic
12 definition or the "additionally" sentence?
13 A. Yes. BellSouth had earlier provided
14 language that included the exception, but it did
15 not read similar to what the first part of that
16 quoted material reads.
17 Q. What did BellSouth provide? What
18 language did BellSouth provide earlier? And
19 tell me when and what it provided?
20 A. When would have been prior to the
21 execution of the contract.
22 Q. That narrows it down.
23 A. I don't have dates with me, so... it
24 may have been in the May time frame, though, is
25 my remembrance.

1 Q. May 2001?
2 A. Right, I'm sorry, May 2001, where
3 the exception language was just tacked on to our
4 earlier definition of LATA wide local. There
5 was no LATA wide local concept language
6 initially. It was just the definition of what
7 LATA wide local was, then with the exception
8 tacked on.
9 Q. When you say, "the exception," you
10 mean the exception --
11 A. Beginning in line 10. I'm sorry, I
12 did it again.
13 Q. For calls that originated or
14 terminated through switched access arrangements
15 as established by the ruling regulatory body?
16 A. Yes.
17 Q. And when BellSouth proposed that
18 language to you, did it tell you why it wanted
19 that language in there?
20 A. The first time we -- no. The first
21 time we saw the language was really in a draft
22 that either came from the BellSouth standard or
23 from another CLPs agreement. And the language
24 was provided to us as proposed language to
25 settle the ISP. To put the proposed language

1 in the contract for place over language for ISP
2 traffic.
3 Q. You confused me. And I'm sure it
4 wasn't your fault, so I need to ask you a
5 question.
6 The language that BellSouth proposed,
7 is the language that begins, "additionally"?
8 A. Uh-huh.
9 Q. Do I understand you correctly that
10 BellSouth proposed that sentence to deal with
11 the ISP traffic issue?
12 A. The document that contained our first
13 read of the exception clause was language
14 provided to BellSouth -- I'm sorry, provided to
15 AT&T by BellSouth. And it was part of a
16 document that was given to AT&T for our
17 consideration in completing the ISP contract
18 language.
19 Q. And what was the rest of the
20 language that BellSouth proposed to deal with
21 the ISP issue?
22 A. It was language that was consistent
23 with the FCC's ISP order?
24 Q. It's your testimony that BellSouth
25 proposed language and said, let's deal with ISP

1 traffic per the FCC's ISP order on remand?
2 A. That's right.
3 Q. And then included the "additionally"
4 and the exclusion that we referred to for
5 switched access arrangements as part of that
6 same proposal?
7 A. That proposal -- that language was
8 included in the set of language that was given
9 to us, but was not discussed. It was not the
10 topic that was being discussed from that set of
11 language. It was ISP language that was being
12 discussed from that set of language.
13 Q. And your testimony is that that was
14 the first time that BellSouth proposed that
15 exception language for switched access
16 arrangements as part of that?
17 A. I'm not even sure that it's correct
18 to say proposed. It was part of the document
19 that they gave us in their proposal for ISP
20 language.
21 Q. Now, when BellSouth first proposed
22 the exception language, "except for calls that
23 are originated or terminated through switched
24 access arrangements as established by the ruling
25 regulatory body," that language is a little bit

1 different than the language that you ultimately
2 agreed to, right?
3 A. It is, yes.
4 Q. Okay. What was the difference?
5 A. The last part of that sentence or
6 that clause, "as established by the ruling
7 regulatory party," it was changed to read, "as
8 established by the state PSC or FCC or something
9 very similar.
10 Q. And did AT&T request that change?
11 A. Yes.
12 Q. Do you know why?
13 A. It just was clear. It was a
14 clarity issue.
15 Q. Did you ever ask BellSouth what it
16 meant by switched access arrangement?
17 A. No.
18 Q. Had you ever heard that term before
19 in your regulatory or other experience at AT&T?
20 A. I'm familiar with switched access
21 services, but nothing called a switched access
22 arrangement.
23 Q. Have you read the interrogatory
24 responses that BellSouth provided to AT&T in
25 this case?

1 A. I glanced at them. To say that I
2 have a firm remembrance of everything would not
3 be correct.
4 Q. It wouldn't be correct to say I have
5 that either, so that's fair enough.
6 A. There was a lot of documentation.
7 Q. You have read our interrogatory
8 responses?
9 A. I have. I have.
10 Q. And, I take it then, did you recall
11 reviewing the response where BellSouth set out
12 that it first proposed the language, additionally
13 parties agree to LATA wide except for switched
14 access arrangements -- I'm paraphrasing -- on
15 May 22, 2001? Do you recall that?
16 A. I would want to see the
17 interrogatory response before I answer.
18 Q. Would you have any reason to
19 dispute, if that is what the response said, that
20 that is the date that BellSouth provided that to
21 AT&T?
22 A. BellSouth provided to AT&T in that
23 May time frame language that BellSouth wanted
24 AT&T to consider for ISP place over language.
25 Q. My question right now though is, to

1 the extent that BellSouth says in their
2 interrogatory response that it first provided to
3 AT&T the, additionally parties agree to a LATA
4 wide over concept, with the exception for
5 switched access arrangements, on May 22, do you
6 have any reason to dispute that was the date?
7 A. I will not dispute the date. But
8 again, the language, the exception clause, I
9 remember being there, but not the additional
10 language or the LATA wide-local concept
11 language. It was basically a definition of what
12 LATA wide local would be, originating/terminating
13 within a LATA, then with the exception, without
14 the local concept. That was not presented in
15 May.
16 Q. You attended lots of meetings
17 negotiating the Interconnection Agreement with
18 BellSouth, right? I'm not defining lots, but --
19 A. Many.
20 Q. Many. Okay. That's perhaps a more
21 adult word than lots.
22 Did you take notes during those
23 meetings?
24 A. I was fortunate to have someone on
25 my team that was always available to take notes

1 for me and I focused on the negotiating, verbal
2 negotiation.
3 Q. So it was not your practice to take
4 notes, then?
5 A. It was not my practice to take
6 notes.
7 Q. When BellSouth first proposed the
8 LATA wide local concept with the exclusion, we
9 described it for switched access arrangements,
10 did it tell you -- did anyone at BellSouth ever
11 tell you that it was proposing that definition
12 and exclusion to deal with or because of the
13 way the parties were handling ISP traffic or
14 voice over Internet traffic?
15 A. In those exact words, no. But in
16 the discussions around what other disagreements
17 existed between BellSouth and AT&T, the
18 disagreements had existed between us that were
19 ISP and other access services such as voice over
20 IP. So those were the disagreements that we
21 continued to negotiate.
22 Q. Did anyone from BellSouth ever tell
23 you in any words that the sentence in 5.3.1.1
24 that starts "additionally," including the
25 exclusion, was meant to deal with the ISP and

1 voice over Internet traffic issues?
2 MS. CECIL: During what time frame?
3 BY MR. SHORE:
4 Q. At any time.
5 A. If you would add, and other access
6 services, then my answer would be yes.
7 Q. Explain that to me.
8 A. If you would say, ISP traffic, voice
9 over IP or any other access services that the
10 parties -- then yes, those were the discussions.
11 Q. Okay. Tell me about those
12 discussions. Who told you what? Let's start
13 with that.
14 A. It would have been BellSouth's
15 negotiating team, which was comprised of Ms.
16 Shiroishi, Michael Willis at the time, whatever
17 attorneys were present. Those would have been
18 the people that would have been describing to us
19 what BellSouth's concerns were.
20 Q. Do you have a recollection of Ms.
21 Shiroishi ever making any statements about why
22 BellSouth wanted that sentence in there and the
23 exclusion?
24 A. Yes, it was to -- again, it dealt
25 with other -- it dealt with an attempt to

1 resolve the other remaining disagreements that we
2 had in North Carolina. And that would have been
3 ISP and voice over IP or other access services.
4 Q. Did she say, ISP and voice over IP
5 and other access services?
6 A. I'm trying to remember exactly the
7 discussion, so...
8 MS. CECIL: Do you want to have the
9 question repeated?
10 THE WITNESS: Sure.
11 MR. SHORE: Have the court reporter
12 repeat it.
13 (The Court Reporter read back the
14 requested question.)
15 THE WITNESS: Yes.
16 BY MR. SHORE:
17 Q. When did Ms. Shiroishi say that?
18 A. It would have been as we negotiated
19 those disagreements to reach agreement on ISP,
20 voice over IP and other access services.
21 Q. And tell me exactly what Ms.
22 Shiroishi said to you regarding the definition
23 of Local Traffic and how it related to ISP and
24 voice over Internet traffic?
25 A. BellSouth's position was that ISP

1 traffic was interstate in nature and subject to
2 successive switched access charges. AT&T's
3 position was that it was local and subject to
4 compensation via reciprocal compensation. These
5 discussions occurred before the FCC's ISP order
6 was released.
7 After the FCC's order was released,
8 we continued to discuss how to implement that
9 ISP order and how ISP traffic was not Local
10 Traffic, but was information access traffic and
11 compensated at the rate caps determined by the
12 FCC.
13 We also discussed the over trition
14 issue of other access services, i.e., voice over
15 IP. And the fact that BellSouth wanted to
16 suggest that that was interstate as well, AT&T's
17 position was that we needed to wait until the
18 FCC ruled on whether or not it was local or
19 interstate traffic.
20 Q. What I want to know is, with respect
21 to the language in 5.3.1.1, "Parties agree to
22 apply LATA wide local concept for exclusion for
23 switched access arrangements," do you recall Ms.
24 Shiroishi making any specific statements about
25 why BellSouth proposed that language or what

1 that language was to accomplish?
2 A. It was language to protect BellSouth
3 from AT&T or any other CLP asserting that other
4 services should be compensated at reciprocal
5 compensation rates.
6 Q. Is it your testimony that Ms.
7 Shiroishi said that to you?
8 A. Yes.
9 Q. Okay. When did she say that to
10 you?
11 A. It would have been in the
12 discussions in the June/July time frame. I
13 don't have an exact note. I'd have to go back
14 and look to see if it's represented in Ms.
15 Stevens' notes.
16 Q. Do you know if she said that in a
17 face-to-face meeting or over the phone?
18 A. It would have been in face-to-face
19 meetings.
20 Q. Other than that testimony, do you
21 have any recollection or is it your testimony
22 that you recall Ms. Shiroishi saying anything
23 else about the purpose of that language and
24 exclusion, that language being the local concept
25 with the exclusion?

1 A. No.
2 Q. You ever heard the term,
3 cross-boundary traffic?
4 A. Cross-boundary traffic. I could not
5 offer you a definition of cross-boundary traffic,
6 no.
7 Q. You ever heard that term?
8 A. Cross-boundary... I can't answer. I
9 don't have an answer. I do not remember
10 hearing the term, cross-boundary.
11 Q. At any time before the parties
12 signed a Second Interconnection Agreement in July
13 2001, did you ever tell anyone at BellSouth that
14 it was AT&T's understanding that the Local
15 Traffic definition was needed to prevent AT&T
16 from representing that ISP traffic and voice
17 over Internet calls were Local Traffic for
18 purposes of applying local or recip comp rates?
19 A. I'm sorry, would you repeat the
20 question?
21 Q. Ms. Stevens said the same thing when
22 I asked her that question.
23 A. There is a lot in that.
24 Q. Yeah, whenever I have to write down
25 a question word for word...

1 MR. SHORE: Can you read that back,
2 please?
3 (The Court Reporter read back the
4 requested question.)
5 A. I'm sorry, read it just one more
6 time.
7 (The Court Reporter read back the
8 requested question.)
9 THE WITNESS: Yes. Whether in
10 exactly those words, as you have written, again,
11 we were debating and negotiating what other
12 services could become -- what other services
13 would be compensated as switched access traffic
14 or what other services would be compensated as
15 reciprocal compensation levels. So all of the
16 discussions that we had dealt with that.
17 So to say that we explicitly -- that
18 we used the words you used in the same
19 structure, I cannot testify that that's exactly
20 what we said.
21 BY MR. SHORE:
22 Q. Okay. How did you express to
23 BellSouth that that was your understanding,
24 whatever words you used?
25 A. In our negotiations regarding the

1 open issues in the arbitration, it was clear
2 that AT&T's intent was to have LATA wide local
3 ability. And the two issues that could have
4 clouded that desire on our part were ISP traffic
5 and voice over IP. So it was clear in our
6 negotiations that those were the items and the
7 only two items that AT&T would have considered
8 in agreeing to the exception as proposed by
9 BellSouth.
10 Q. And did you tell -- my question was,
11 how if at all did you communicate that to
12 BellSouth?
13 A. Through negotiations and through
14 verbal discussions during the negotiations.
15 Q. And what did you say?
16 A. I think I just told you that we
17 would have said that --
18 Q. I just want to be clear. I don't
19 want -- I want to know what you remember
20 saying.
21 A. Okay. That AT&T, again, desired to
22 have the language that supported our position
23 that we had LATA wide local authority. And
24 that the things that we were considering in our
25 decision as to whether or not to accept the

1 exception language were those disagreements that
2 still existed in the arbitration proceeding.
3 Q. Let me make sure I got the time
4 line right.
5 AT&T filed for arbitration for the
6 Second Interconnection Agreement back in the
7 spring of 2000?
8 A. Yes, we did.
9 Q. And BellSouth in North Carolina, as
10 well as other states --
11 A. Yes.
12 Q. BellSouth filed responses to those
13 petitions, right?
14 A. They filed pleadings in response to
15 our filings, yes.
16 Q. Was it part of your job to review
17 BellSouth's responses to your arbitration
18 petitions?
19 A. The Law and Government Affairs
20 organization assumed responsibility for the
21 arbitration proceedings once the filing was made.
22 My role was to continue to negotiate any
23 outstanding issues in an attempt to resolve
24 those prior to having the Commission's hearing
25 or having the Commission issue us an order.

1 So the review of the BellSouth
2 filing would have been done by the Law and
3 Government Affairs organization.
4 Q. I take it, then, you didn't review
5 BellSouth's responsive filings to your
6 arbitration petition?
7 A. I cannot remember reviewing every
8 one, but yes, I would have, as time permitted,
9 reviewed the BellSouth filing.
10 Q. And is my understanding correct that,
11 subsequent to AT&T filing its arbitration
12 petition in 2000, and BellSouth filing a
13 response, there actually was an arbitration
14 proceeding and hearing before the North Carolina
15 Commission?
16 A. Yes, in July and August of 2000.
17 Q. And been commencing again in 2001,
18 the parties attempted again to try to negotiate
19 issues between them that they wanted to be a
20 part of the second agreement. Is that a fair
21 characterization?
22 A. That's fair. BellSouth filed a
23 brief in October 2000 telling the Commission of
24 certain items that had been resolved between the
25 parties, and suggested what the remaining open

1 issues were. And we continued to negotiate
2 those.
3 Q. And when you continued to negotiate,
4 either the latter half of 2000 or in 2001,
5 continuing until the time you signed the
6 agreement, did you negotiate and eventually agree
7 to any issues that were not open issues at the
8 time of the arbitration?
9 A. That were not disagreements or that
10 were not open issues?
11 Q. That were not contained in your
12 arbitration petition.
13 A. When we filed the arbitration
14 petition, there were disagreements as well as
15 open contract language, that the parties believed
16 we could resolve without arbitrating. And those
17 were dealt with.
18 Q. Okay.
19 A. And if the FCC or the State
20 Commission had issued some additional order or
21 some order that impacted the current language,
22 we would go back and try to reflect to keep
23 the contract language current with what was
24 happening in the different regulatory arenas.
25 Q. So would it be fair to say that the

1 parties addressed some issues in the Second
2 Interconnection Agreement that they executed in
3 July of 2001, that were not identified as
4 arbitrable issues in the petition AT&T filed
5 back in 2000?
6 A. Only if they related to, again, a
7 State Commission or PS or FCC ruling that
8 impacted the language such that it needed to be
9 updated. So it would have been those, anything
10 marked as open, and anything marked as disagree.
11 Q. You have read the testimony Ms.
12 Shiroishi filed in this case?
13 A. Yes, I have.
14 Q. And you have read in Ms. Shiroishi's
15 testimony that she explained to you during the
16 course of negotiations exactly what BellSouth
17 intended with its definition of Local Traffic
18 and the exclusion for switched access
19 arrangements, right?
20 A. I have read that, yes.
21 Q. And, I take it, your testimony would
22 be that Ms. Shiroishi is lying?
23 A. I do not agree with the testimony
24 filed by Ms. Shiroishi.
25 Q. Well, is it your testimony that she

1 is wrong, that that would be a lie?
2 A. Yes, I'm testifying that my
3 recollection and remembrance and notations of the
4 events do not agree with Ms. Shiroishi's.
5 Q. Okay. What notations do you have?
6 A. Again, it would be a reference back
7 to Ms. Stevens' notes during our discussions.
8 Q. Now, on page 16 of your testimony
9 you talk about Ms. Shiroishi's explanation. You
10 see that?
11 A. I do.
12 Q. Okay. What explanation was that?
13 A. The explanation regarding what
14 switched access traffic comprised of -- was
15 comprised of, as well as -- well, we talked
16 about what those were. It's the fact that
17 BellSouth had additional concerns regarding other
18 access services being compensated at recip comp
19 rates, and specifically what those two issues
20 were with ISP and voice over IP Internet.
21 Q. The term in that "additionally"
22 sentence, switched access arrangements, do you
23 know if that appears anywhere else in the
24 Interconnection Agreement the parties signed?
25 A. It does not.

1 Q. You ever heard the term, "trunking
2 arrangements"?
3 A. Yes.
4 Q. What does that mean?
5 A. A trunk is a transport facility that
6 is used to transport certain kinds of traffic.
7 It's usually between either an End Office or a
8 tandem or two End Offices. It's a transporting
9 facility.
10 Q. So would the trunking arrangement
11 refer to those facilities that you described?
12 A. Trunking arrangements would -- I'm
13 sorry, ask that -- ask your clarified question
14 again.
15 Q. I asked if you ever heard of
16 trunking arrangements?
17 A. The answer is yes.
18 Q. And you described some facilities.
19 A. Right.
20 Q. And my question was, then trunking
21 arrangements refers to those facilities and the
22 configuration of those facilities, is that your
23 understanding?
24 A. It would -- yes. Well, it would
25 define or describe the facility, yes, used to

1 carry that traffic.
2 Q. When BellSouth proposed the exclusion
3 language that's at issue in this case, did you
4 ever ask BellSouth what switched access
5 arrangements meant?
6 A. No.
7 Q. Did you ever discuss with anybody
8 internal to AT&T before the second agreement was
9 signed what switched access arrangements meant?
10 A. No, we discussed the switched access
11 traffic definitions and what -- and how they
12 would be transported. But to say that we
13 talked about switched access arrangements, no.
14 Q. BellSouth ever tell you what switched
15 access arrangements meant before you signed the
16 agreement?
17 A. No, we discussed switched access
18 traffic and how that traffic would be defined.
19 Q. In any of your negotiation meetings
20 with BellSouth, do you recall Ms. Shiroishi
21 drawing diagrams on a white board?
22 A. In several, either Ms. Shiroishi or
23 other members of the BellSouth negotiating team.
24 Q. Is it your testimony that Ms.
25 Shiroishi did not draw any diagrams related to

1 the Local Traffic definition and the exclusion
2 for switched access arrangements, or that you
3 don't recall her --
4 A. She did not --
5 MS. CECIL: In what time frame?
6 BY MR. SHORE:
7 Q. Ever.
8 A. Prior to -- I'm sorry, thank you for
9 that question.
10 Prior to the signing of the North
11 Carolina contract, no. After we became aware
12 that BellSouth wasn't willing to comply with the
13 terms of the contract, we began to discuss
14 BellSouth's opposition to the language, and yes,
15 she did draw diagrams.
16 Q. On pages 18 and 19 of your testimony
17 you discuss the fact that there was provisions
18 in Section 5.4, Attachment 3, and you quote
19 those there on pages 18 and I think spilling
20 over to 19. And that Ms. Shiroishi on -- I
21 think you provide the date, July 18, 2001, sent
22 you an e-mail saying that she realized you don't
23 need those provisions, right?
24 A. That's correct.
25 Q. Okay. Did you ever request that

1 those provisions be stricken from the agreement?
2 A. We questioned whether or not those
3 terms were necessary. But did we request that
4 they be deleted? No, BellSouth offered and we
5 agreed to have those terms deleted.
6 Q. And on pages 20 and 21 of your
7 testimony, you state that you reviewed AT&T's
8 meetings notes from the June/July 2001 time
9 frame, right?
10 A. That's correct.
11 Q. Are those Ms. Stevens' notes?
12 A. Yes, it would be the meeting notes,
13 as well as any markings on the redline
14 documents.
15 Q. Other than Ms. Stevens' notes and
16 the markings on the redlines, did you review
17 anything else? I just want to pin down what you
18 are referring to there.
19 A. That's it.
20 Q. Okay. And was there anything that
21 you found in those notes to support your
22 recollection of the events as set forth in your
23 testimony?
24 A. In the June 6th notes from Ms.
25 Stevens, we talk of -- or she notes discussions

1 that we had with BellSouth regarding Point of
2 Interconnection issues, particularly local channel
3 and dedicated transport. And that's -- we have
4 a notation that diagrams were made of that, and
5 those were the diagrams that were made during
6 that meeting, which is not in agreement with Ms.
7 Shiroishi's remembrance of diagrams in that
8 meeting.
9 Q. Anything else in the notes that you
10 reviewed that support your recollection as set
11 forth in your testimony?
12 A. Other than what's contained in the
13 testimony, no.
14 Q. Now, on page 21, and you just
15 touched on it, you testified that the parties on
16 June 6th drew diagrams. But those involve the
17 Point of Interconnection issue, right?
18 A. That's right.
19 Q. Did you remember that or is that
20 from reading Ms. Stevens' notes that that came
21 to mind?
22 A. I remembered it and it was confirmed
23 by Ms. Stevens' notes.
24 Q. Now, the sentence in Section 5.3.3
25 of the agreement that says it's interrelated to

1 Section 5.3.1, right?
2 A. That's correct.
3 Q. Was that sentence proposed by
4 BellSouth?
5 A. It was.
6 Q. BellSouth tell you why it was
7 proposing that section?
8 A. Yes. The reason we were given was
9 that the language in 5.3.5 was, again, directly
10 related to the language in 5.3.1.1, and
11 BellSouth believed it was necessary to show that
12 inter relationship.
13 Q. And who told you that?
14 A. It would have been Ms. Shiroishi.
15 Q. Did she tell you that in a
16 face-to-face meeting?
17 A. It would have been -- yes. Again,
18 we negotiated face to face, and sometimes we
19 negotiated via teleconference. So we would have
20 been in a negotiations meeting whether, again,
21 that was in a face-to-face meeting room, or over
22 the telephone.
23 Q. Do you know what the rules of
24 contract construction and interpretation are?
25 A. Could I quote them? No. Am I

1 familiar with the proper way to construct a
2 contract? Yes.
3 Q. And how are you familiar with the
4 way to construct a contract?
5 A. Prior to my accepting the contract
6 negotiator's job I was -- I took some seminars
7 in contract preparation. And so it was through
8 seminars and through educational opportunities
9 that I had.
10 Q. Okay. And were those internal AT&T
11 courses or were they sort of outside seminars?
12 A. Could have been both. Both.
13 Q. What are the general rules of
14 contract construction and interpretation? I'm
15 not asking you to quote them to me, but as you
16 used that term?
17 MS. CECIL: Relative to this issue?
18 MR. SHORE: No, as he uses the
19 term. Proper rules of contract construction and
20 interpretation.
21 MS. CECIL: Relative to what he is
22 quoting.
23 MR. SHORE: No, not relative, just
24 generally. He says he is familiar with the
25 rules. Obviously he has to be familiar with

1 them generally to apply them to the case.
2 MS. CECIL: Let's look at the exact
3 language.
4 THE WITNESS: What page?
5 BY MR. SHORE:
6 Q. I just want to know if you know
7 what the rules of contract construction and
8 interpretation are generally, without applying
9 them to any point in your testimony?
10 A. What page are you --.
11 MS. CECIL: I think he has already
12 answered that question.
13 THE WITNESS: What page are you
14 referencing?
15 BY MR. SHORE:
16 Q. I'm not referencing any quote.
17 A. I'm sorry, I thought you were.
18 Q. No. You said you got some general
19 knowledge about what the rules of contract
20 construction and interpretation are, and it was
21 based on some seminars that you attended, but
22 you couldn't -- and I'm paraphrasing, I
23 recognize that, but you couldn't quote the
24 source specifically. I just want to know what
25 your general knowledge is. What are the rules

1 of contract construction and --
2 MS. CECIL: Generally?
3 MR. SHORE: Yes.
4 THE WITNESS: That there are two
5 parties involved in a contract; that the terms
6 of the contract are binding on the parties; that
7 you have to show the intent of the parties and
8 develop processes in the contract; that there
9 are certain formalities in structuring language
10 and assigning sites, in doing footnotes.
11 BY MR. SHORE:
12 Q. Okay. Anything else? I don't want
13 to belabor the point.
14 A. That's enough, no.
15 Q. In your contract negotiations with
16 BellSouth, did you ever discuss whether it was
17 technically feasible to terminate different types
18 of traffic that may be combine on a particular
19 trunk group?
20 A. Yes.
21 Q. Okay. And what context were those
22 discussions?
23 A. It would have been during the Point
24 of Interconnection negotiations -- well, let me
25 go back.

1 For Mississippi, let's start there,
2 it would have been during our discussions of
3 AT&T's desire to combine local and switched
4 access services over the same facility to serve
5 one of our customers. And that's the language
6 that you would find in the Mississippi contract
7 today.
8 Q. How about in the context of the
9 North Carolina negotiations?
10 A. In context of the North Carolina
11 Commission, again, it would have to do with
12 Point of Interconnection and the fact that we
13 desired to transport over an interconnection
14 trunk both local and intraLATA toll and transit
15 tracking, as the contract provides.
16 Q. And do you know what time frame that
17 you told BellSouth that?
18 A. We could look back at the redlines
19 to -- it was a point where we were changing
20 from BellSouth's preferred language regarding
21 Point of Interconnection and where AT&T's
22 preference was just to reference an
23 interconnection group.
24 MR. SHORE: Off the record for a
25 second.

1 (A recess transpired.)

2 BY MR. SHORE:

3 Q. I think we talked earlier about

4 BellSouth's original proposal, you said something

5 like switched access arrangements as established

6 by the ruling regulatory body, and you proposed

7 as established by the State Commission or FCC,

8 correct?

9 A. That's correct.

10 Q. And what switched access arrangements

11 did the State Commission or FCC establish?

12 A. The State Commissions establish --

13 State Commissions of the FCC establish how

14 traffic is compensated. They set -- in the

15 FCC's case, they set switched access rates to be

16 billed for originating and terminating traffic.

17 State Commissions, again, set rates

18 for compensating ILECs or other CLECs for

19 terminating IXE switched access traffic. I'm

20 not familiar with anything the FCC or the State

21 Commissions would do regarding switched access

22 arrangements, only the traffic that would be

23 transported.

24 Q. Do you know where it is that the

25 State Commissions would establish switched access

1 service and rates?
2 A. It would have been in an order. If
3 it's established by the State Commission, it
4 would have been ordered by the State Commission.
5 Q. Okay. Could it be in tariffs that
6 the Commission approves, if you know?
7 A. There are switched access tariffs at
8 both the FCC level and the state level, so
9 rates would be established in those tariffs.
10 Q. And would the switched access
11 services, do you know, if they are also
12 described in those tariffs?
13 MS. CECIL: Are you talking
14 generally or under this contract provision?
15 MR. SHORE: No, just generally.
16 MS. CECIL: Generally?
17 THE WITNESS: I mean, rationally and
18 reasonably you would think that switched access
19 services would be defined to go with the rates.
20 So I'm going to say, yes, that the switched
21 access services would be defined consistent with
22 the rates that are also filed in the tariff.
23 BY MR. SHORE:
24 Q. What discussions did you have
25 internal, if any, at AT&T regarding whether to

1 adopt BellSouth's proposal regarding the LATA
2 wide concept in the exclusion, as in the
3 agreement?
4 MS. CECIL: Object to the extent it
5 requires you to answer relative to
6 attorney/client privilege conversations.
7 THE WITNESS: Okay.
8 BY MR. SHORE:
9 Q. Before you signed the agreement, did
10 you have any conversations with Mr. King?
11 A. Absolutely.
12 Q. Tell me those conversations?
13 A. Mr. King's responsibility includes the
14 pricing and the agreement to any compensation
15 that would have been -- any compensation
16 language that would have been put into the
17 contract. So any of the language in Attachment
18 3 that dealt with either AT&T paying BellSouth
19 or BellSouth paying AT&T, then that would have
20 been discussed with Mr. King.
21 Q. And what did you tell Mr. King?
22 What did he tell you? I want to know what
23 y'all said to each other?
24 A. Okay, sorry. There were numerous
25 discussions between myself and Mr. King that

1 dealt everything with the interconnection rates
2 that BellSouth was proposing in the contract.
3 We discussed the bill and keep offer that was
4 made by BellSouth for local channels. We
5 discussed --
6 Q. Let me -- I don't want to interrupt
7 you, but let me go back to my original question
8 about internal discussions about the definition
9 of Local Traffic and its exclusion?
10 A. Sorry. Okay.
11 MS. CECIL: During what time frame?
12 BY MR. SHORE:
13 Q. Before the agreement was signed.
14 MS. CECIL: Going all the way back
15 to negotiations?
16 MR. SHORE: Yeah, in the history of
17 time.
18 MS. CECIL: For North Carolina?
19 BY MR. SHORE:
20 Q. If I don't say a period of time,
21 you can assume ever.
22 A. Okay. We would have discussed the
23 definition of Local Traffic prior to filing the
24 arbitration matrix.
25 Q. Do you recall that discussion?

A. Yes.

Q. What was it?

A. Simple fact that for the State of North Carolina that we maintained the same language that we had executed in Mississippi, which was that Local Traffic was LATA wide.

Q. When was the next time you discussed the definition of Local Traffic as it pertained to the North Carolina Second Agreement with Mr. King?

A. As we were discussing the definition of switched access as provided by BellSouth, which again, we could pinpoint the date, but I don't have it exactly.

Q. That would be in the summer of 2001?

A. Right. And the discussions of what language we would accept as place holder for ISP and what the rates would be and whether or not they would be mirrored rates.

Q. And what specific discussions did you have about the -- with Mr. King about the exclusion for switched access arrangements in that local definition, if any?

A. The discussions were, the exception applies to BellSouth's concerns regarding other

1 access services that AT&T or another CLP may be
2 attempted to try to bill us as recip comp
3 rates.
4 Q. Okay. Did you talk about those
5 issues with anybody else inside AT&T prior to
6 executing the agreement?
7 A. With my negotiating team and the
8 attorneys.
9 MS. CECIL: You just can't say what
10 you said to attorneys.
11 THE WITNESS: Again, the negotiating
12 -- Mr. King would have been the decision maker
13 on whether to accept that or not.
14 BY MR. SHORE:
15 Q. For an interstate call that AT&T
16 terminates to BellSouth, do you know what rates
17 BellSouth charges AT&T for terminating that call?
18 A. AT&T the IXE?
19 Q. Uh-huh.
20 A. For interstate intraLATA it would be
21 interstate access rates.
22 Q. And where are those rates found?
23 A. Probably in an FCC switched access
24 tariff.
25 Q. How about interLATA intrastate call,

1 what rates apply -- what rates -- what rates
2 does BellSouth --
3 A. Intrastate interLATA?
4 Q. Right. What rates does BellSouth --
5 A. It's easier for me to swap it
6 around.
7 Q. What rates does BellSouth charge AT&T
8 for terminating that call?
9 A. For inter -- I'm sorry, for
10 intrastate interLATA, it would be state specific
11 switched access charges.
12 Q. And where would you find that rate?
13 A. In a BellSouth switched access
14 tariff.
15 Q. At the State Commission?
16 A. At the State Commission.
17 Q. Now, if I understand your testimony
18 correctly -- or do I understand your testimony
19 correctly that switched access arrangements, as
20 that term is used in Section 5.3.1, is limited
21 by the definition of switched access traffic in
22 5.3.3?
23 A. Absolutely.
24 Q. Did you ever tell BellSouth that was
25 your understanding before it signed the

1 agreement?
2 A. In -- no.
3 Q. Did you ever tell BellSouth, you
4 know, we are interpreting switched access
5 arrangements to mean switched access traffic as
6 defined in 5.3.3?
7 A. Our discussions were that the
8 exclusion was based on switched access traffic.
9 And as that was defined in 5.3.5. So I don't
10 know if that's responsive to your question or
11 not, but that --
12 Q. I'm not sure if it is or not
13 either.
14 Did you ever tell BellSouth that
15 that was your understanding prior to signing the
16 agreement?
17 A. Yes.
18 Q. Who did you tell?
19 A. It would have been Ms. Shiroishi and
20 the other members of the negotiating team.
21 Q. That would have been in one of your
22 negotiating sessions?
23 A. Yes.
24 Q. What was BellSouth's position
25 regarding voice over Internet protocol calls?

1 Was it that they were interstate?
2 A. Interstate.
3 Q. Did BellSouth ever change its
4 position?
5 A. Yes, after the North Carolina
6 Commission issued its recommended order in the
7 arbitration proceeding and basically ruled in
8 AT&T's favor that the calls -- that the voice
9 over IP calls should not be defined as
10 interstate and deferred to -- I'm sorry, that
11 voice over IP should not be considered as a
12 switched access.
13 Q. What did BellSouth's position become
14 then?
15 A. That they were willing to basically
16 defer that issue to the FCC until the FCC
17 ruled, which was AT&T's position going into the
18 arbitration.
19 Q. You talked about in your pre-file
20 testimony -- I don't have a reference. I might
21 could find one if you need me to. I think you
22 said earlier today that you conferred with Mr.
23 King about issues that you were dealing with in
24 negotiations that dealt with his area of
25 responsibility. Is that a fair way to say it?

A. Yes, sir.

Q. Did you talk to Mr. King about every single issue that came up in negotiations?

A. Yes, every issue that dealt with a price, a rate or how compensation was to be determined between the parties.

MR. SHORE: Want to take a two, three minute break and then we finish up?

THE WITNESS: Sure.

MR. SHORE: I don't have much more.

(A recess transpired.)

BY MR. SHORE:

Q. Mr. Peacock, we were talking earlier about the definition of Local Traffic and its exclusion in switched access arrangements. And your testimony was that it was your understanding that that exclusion was to deal with, I think you said, ISP traffic, VOIP traffic, and other access services?

A. That's right.

Q. What other access services are you referring to?

A. Any Feature Group A, B, C, any other access services that would be defined by the FCC or by the State Commission.

1 MR. SHORE: That's all I have.
2 MS. CECIL: A couple redirect
3 questions.
4 **EXAMINATION**
5 **BY-MS.CECIL:**
6 Q. Mr. Peacock, you indicated that there
7 was one time you remember that you called Ms.
8 Shiroishi at home. Do you recall that?
9 A. I do.
10 Q. Do you know the date that you called
11 Ms. Shiroishi at home?
12 A. July 17, 2001.
13 Q. Now, with respect to the question
14 Mr. Shore just asked you, when you mentioned
15 Feature Group A, Feature Group B, and others
16 kind of traffic, was that within the context of
17 intrastate traffic or interstate traffic?
18 MR. SHORE: Object to the form.
19 You can answer.
20 THE WITNESS: Interstate.
21 MS. CECIL: No further questions.
22 (WHEREUPON, the deposition was
23 concluded.)
24
25

STATE OF GEORGIA:

COUNTY OF FULTON:

I hereby certify that the foregoing transcript was reported, as stated in the caption, and the questions and answers thereto were reduced to typewriting under my direction; that the foregoing pages represent a true, complete, and correct transcript of the evidence given upon said hearing, and I further certify that I am not of kin or counsel to the parties in the case; am not in the employ of counsel for any of said parties; nor am I in anywise interested in the result of said case.

1 Disclosure Pursuant to Article
2 8(B) of the Rules and Regulations of the
3 Board of Court Reporting of the Judicial
4 Council of Georgia, I make the following
5 disclosure:
6 I am a Georgia Certified Court
7 Reporter, here as a representative of
8 Alexander Gallo & Associates, Inc., to report
9 the foregoing matter. Alexander Gallo &
10 Associates, Inc., is not taking this
11 deposition under any contract that is
12 prohibited by O.C.G.A. 5-14-37 (a) and (b).
13 Alexander Gallo & Associates,
14 Inc., will be charging its usual and
15 customary rates for this transcript.
16
17
18
19 Phyllis A. Lee, CCR-B-2021
20
21
22
23
24
25

CERTIFIED COURT REPORTER STATE OF GEORGIA 1776 B-2021

1 CAPTION

2 The Deposition of **Billy C. Peacock**,
3 taken in the matter, on the date, and at the
4 time and place set out on the title page
5 hereof.

6 It was requested that the deposition
7 be taken by the reporter and that same be
8 reduced to typewritten form.

9 It was agreed by and between counsel
10 and the parties that the Deponent will read
11 and sign the transcript of said deposition.

12
13
14
15
16
17
18
19
20
21
22
23
24
25

1 CERTIFICATE

2 STATE OF_____:

3 COUNTY/CITY OF_____:

4 Before me, this day, personally

5 appeared, **Billy C. Peacock**, who, being duly

6 sworn, states that the foregoing transcript

7 of his/her Deposition, taken in the matter,

8 on the date, and at the time and place set

9 out on the title page hereof, constitutes a

10 true and accurate transcript of said

11 deposition.

12 _____

13 **Billy C. Peacock**

14

15 SUBSCRIBED and SWORN to before me this

16 _____ day of_____, 2003 in the

17 jurisdiction aforesaid.

18 _____ _____

19 My Commission Expires Notary Public

20

21

22

23

24

25

DEPOSITION ERRATA SHEET

RE: Alexander Gallo & Associates
File No. 3587
Case Caption: AT&T Communications, et al. vs. BellSouth Telecommunications, Inc.
Deponent: **Billy C. Peacock**
Deposition Date: January 20, 2003

To the Reporter:
I have read the entire transcript of my Deposition taken in the captioned matter or the same has been read to me. I request that the following changes be entered upon the record for the reasons indicated. I have signed my name to the Errata Sheet and the appropriate Certificate and authorize you to attach both to the original transcript.

Page No. _____ Line No. _____ Change to: _____

_____

Reason for change: _____

Page No. _____ Line No. _____ Change to: _____

_____

Reason for change: _____

Page No. _____ Line No. _____ Change to: _____

_____

Reason for change: _____

Page No. _____ Line No. _____ Change to: _____

_____

Reason for change: _____

Page No. _____ Line No. _____ Change to: _____

_____

Reason for change: _____

Deposition of Billy C. Peacock

Page No. _____ Line No. _____ Change to: _____

_____

Reason for change: _____

Page No. _____ Line No. _____ Change to: _____

_____

Reason for change: _____

Page No. _____ Line No. _____ Change to: _____

_____

Reason for change: _____

Page No. _____ Line No. _____ Change to: _____

_____

Reason for change: _____

Page No. _____ Line No. _____ Change to: _____

_____

Reason for change: _____

Page No. _____ Line No. _____ Change to: _____

_____

Reason for change: _____

SIGNATURE: _____ DATE: _____

Billy C. Peacock

A

ability 43:3
Absolutely 61:11 65:23
accept 15:9 43:25 63:17 64:13
accepting 55:5
access 9:19 17:12,21,23 18:1,10,16,19,25 19:2,7 19:15,20,23 20:1,7,8,9 20:18 27:16 28:8 30:14 32:5,15,24 33:16,20,21 34:14 35:5 36:9,19 37:5 37:9 38:3,5,20 39:2,10 39:14,23 42:13 47:18 48:14,18,22 50:4,9,10 50:13,15,17 51:2 58:4 59:5,10,15,19,21,25 60:7,10,18,21 63:12,22 64:1,21,23 65:11,13,19 65:21 66:4,5,8 67:12 68:15,19,21,24
accomplish 40:1
accurate 5:23 73:10
add 37:5
added 15:23
additional 35:9 46:20 48:17
additionally 26:1,6,14,22 27:25 29:4,12 31:7 32:3 34:12 35:3 36:24 48:21
address 3:9,11,13
addressed 47:1
adopt 61:1
adult 35:21
advise 17:3
advocacy 10:21 12:7 21:23
advocated 12:9
Affairs 10:19 44:19 45:3
aforesaid 73:17
afternoon 3:7
ago 19:2
agree 26:1,5,20 28:1 34:13 35:3 39:21 46:6 47:23 48:4
agreed 15:20,22 16:5 22:16,23 24:9,14 26:6 29:8,9 33:2 52:5 72:9
agreeing 25:11 43:8
agreement 12:21 13:12 14:6,14 15:5,18 18:7 20:19 22:2,9,18 23:3,5 23:9,12,22 24:18 25:16 25:21 26:12,19 27:9 30:23 35:17 38:19 41:12 44:6 45:20 46:6 47:2 48:24 50:8,16 52:1 53:6,25 61:3,9,14 62:13 63:9 64:6 66:1,16
agreements 23:10,17,18 24:24
al 74:5
Alabama 11:19
Alexander 71:8,9,13 74:3
ANDREW 2:12
andrew.shore@bellsou... 2:18
answer 5:4,24 8:4,6 19:14 34:17 37:6 41:8,9 49:17 61:5 69:19
answered 56:12
answers 70:5
anybody 50:7 64:5
anywise 70:13
APPEARANCES 2:1
appeared 73:5
appears 20:19 48:23
applied 23:23
applies 63:25
apply 39:22 56:1 65:1
applying 41:18 56:8
appropriate 74:17
appropriately 27:17
approves 60:6
April 25:12
arbitrable 47:4
arbitrate 24:3
arbitrated 22:8
arbitrating 46:16
arbitration 22:10,17 23:13,13,14 24:11,13 27:11 43:1 44:2,5,17,21 45:6,11,13 46:8,12,13 62:24 67:7,18
Architecture 12:16,18
area 67:24
arenas 46:24
arrangement 24:1,2 33:16,22 49:10
arrangements 30:14 32:5 32:16,24 34:14 35:5 36:9 39:23 47:19 48:22 49:2,12,16,21 50:5,9,13 50:15 51:2 59:5,10,22 63:22 65:19 66:5 68:15
Article 71:1
asked 17:18,22 18:9 41:22 49:15 69:14
asking 8:3 19:17,23 55:15
asserting 40:3
assigning 57:10
assignment 10:20
assistant 12:6
Associates 71:8,10,13 74:3
assume 62:21
assumed 10:17 13:1 44:20
Atlanta 1:14 2:7,16 10:22 10:24
attach 74:18
Attachment 25:17 29:3 51:18 61:17
attempt 37:25 44:23
attempted 45:18 64:2
attempting 21:16
attend 13:25
attended 35:16 56:21
attention 25:23
attorneys 37:17 64:8,10
attorney/client 61:6
AT&T 1:2 2:2 10:14 12:8 12:20 13:11,16 15:16 18:13,17 21:16,22,24 22:2,16 23:17 24:9,10 24:17 27:12 28:9 31:15 31:16 33:10,19,24 34:21,22,24 35:3 36:17 40:3 41:15 43:7,21 44:5 45:11 47:4 50:8 55:10 60:25 61:18,19 64:1,5 64:15,17,18 65:7 74:5
AT&T's 12:11 21:20 39:2 39:16 41:14 43:2 52:7 58:3,21 67:8,17
Augier 9:24
August 45:16
authority 43:23
authorize 74:17
available 35:25
aware 51:11
A-U-G-I-E-R 10:2

B

b 68:23 69:15 71:12
back 4:15 15:19 16:4 22:9 28:5 38:13 40:13 42:1,3 42:7 44:6 46:22 47:5 48:6 57:25 58:18 62:7 62:14
background 9:14
based 16:3 23:14 56:21 66:8
basically 13:22 35:11 67:7,15
basis 22:22 23:4 24:8
Baton 12:5
began 51:13
beginning 23:3 26:14,22 30:11
begins 31:7
behalf 2:2,11 12:11
belabor 57:13
believe 19:13 24:21
believed 16:5 18:18 46:15 54:11
BellSouth 1:7 2:11,13,21 2:22 12:22,23 13:11,17 13:21 14:1,22,24 15:14 15:14,25 16:9 18:13 22:3,16,23 23:17 24:9 27:15 28:10 29:1,11,13 29:17,18 30:17,22 31:6 31:10,14,15,20,24 32:14,21 33:15,24 34:11,20,22,23 35:1,18 36:7,10,17,22 37:22 39:15,25 40:2 41:13 42:23 43:9,12 44:9,12 45:1,9,12,22 47:16 48:17 50:2,4,14,20,23 51:12 52:4 53:1 54:4,6 54:11 57:16 58:17 61:18,19 62:2,4 63:12 64:16,17 65:2,4,7,13,24 66:3,14 67:3 74:6
BellSouth's 37:14,19 38:25 44:17 45:5 51:14 58:20 59:4 61:1 63:25 66:24 67:13
benefit 8:2
best 8:4
Beth 2:21
better 9:25
bill 62:3 64:2
billed 59:16
Billy 1:10 3:1,3,10 72:2 73:5,13 74:7 75:10 76:8
binding 57:6
bit 32:25
board 7:8 50:21 71:3
body 30:15 32:25 59:6
boss 9:22 10:3
bosses 10:6
bottom 25:19
Box 3:11

Bracy 2:22
break 4:1 68:8
brief 45:23
briefly 9:12,14
build 23:13
business 3:8
BY-MR.SHORE 3:6
BY-MS.CECIL 69:5

C

C 1:10 3:1,3,10 68:23 72:2 73:5,13 74:7 75:10 76:8
call 16:25 17:17 64:15,17 64:25 65:8
called 18:22 33:21 69:7 69:10
calls 14:11 27:10 30:13 32:22 41:17 66:25 67:8 67:9
caps 39:11
caption 70:5 72:1 74:5
captioned 74:12
career 9:15
Carlyle 2:4 4:13 5:16
Carolina 1:1 4:7 12:22 14:4,9 16:22 22:3 24:11 24:17 27:12 28:10 38:2 44:9 45:14 51:11 58:9 58:10 62:18 63:4,9 67:5
Carolinas 1:4
carry 50:1
case 33:25 47:12 50:3 56:1 59:15 70:11,14 74:5
caused 23:20
CCR-B-2321 1:16 71:19
Cecil 2:3 3:18 4:12,19 6:1 7:12 24:23 25:2 37:2 38:8 51:5 55:17,21 56:2 56:11 57:2 60:13,16 61:4 62:11,14,18 64:9 69:2,21
Cecil's 5:19 8:21
certain 17:1 19:18 45:24 49:6 57:9
certainly 7:14 9:16 22:14
Certificate 73:1 74:17
Certified 71:6
certify 70:3,10
cetera 6:20 7:18
change 10:12 33:10 67:3 74:20,22,23,25 75:1,3,4 75:6,7,9,12,14,15,17,18 75:20,21,23,24 76:1,2,4
changed 15:16 33:7
changes 8:25 9:5 15:13 16:3 74:14
changing 58:19
channel 53:2
channels 62:4
characterization 15:24 45:21
charge 65:7
charges 39:2 64:17 65:11
charging 71:14
clarified 49:13
clarity 33:14
clause 31:13 33:6 35:8
cleaner 8:9
clear 3:21 15:3 19:24 20:24 33:13 43:1,5,18
CLECs 59:18
client 13:20
clients 13:23
clouded 43:4
CLP 28:9 40:3 64:1
CLPs 30:23
collaborate 4:23 5:5,8
combine 57:18 58:3
come 27:19
commencing 45:17
Commission 1:1 11:4 12:10 44:25 45:15,23 46:20 47:7 58:11 59:7 59:11 60:3,4,6 65:15,16 67:6 68:25 73:19
Commissions 59:12,13,17 59:21,25
Commission's 44:24
common 15:10
communicate 43:11
Communications 1:2,3 74:5
comp 18:20 20:10 41:18 48:18 64:2
compensable 18:15,19
compensated 19:18 20:3 20:7,10 27:17 39:11 40:4 42:13,14 48:18 59:14
compensating 59:18
compensation 18:15 19:25 22:20 26:15,19 27:18 28:11 39:4,4 40:5 42:15 61:14,15 68:5
Complainants 1:5
complete 6:14 70:8
completing 31:17
comply 51:12
comprised 37:15 48:14 48:15
concept 30:5 35:4,10,14 36:8 39:22 40:24 61:2
concerned 18:13 27:16
concerns 37:19 48:17 63:25
concluded 69:23
conference 14:11
conferred 67:22
configuration 49:22
confirmed 53:22
confronted 21:10
confused 31:3
consider 15:14,17 34:24
consideration 31:17
considered 26:10 43:7 67:11
considering 43:24
consistency 5:18 6:12,16 6:18,20,23
consistent 6:25 31:22 60:21
constitutes 73:9
construct 55:1,4
construction 54:24 55:14 55:19 56:7,20 57:1
consulted 13:20
contact 16:12
contained 31:12 46:11 53:12
context 57:21 58:8,10 69:16
continue 44:22
continued 36:21 39:8 46:1,3
continuing 46:5
contract 14:9 16:2,21 17:7,10,15 18:4,12 19:12,16 22:24 29:21 31:1,17 46:15,23 51:11 51:13 54:24 55:2,4,5,7 55:14,19 56:7,19 57:1,5 57:6,8,15 58:6,15 60:14 61:17 62:2 71:11
control 8:14,16
conversation 20:22
conversations 61:6,10,12
correct 6:22 12:19 13:18 22:20 32:17 34:3,4 45:10 51:24 52:10 54:2 59:8,9 70:8
corrections 9:4
correctly 27:6,10 31:9 65:18,19
corroboration 4:18
Council 71:4
counsel 2:1 70:11,12 72:9
COUNTY 70:2
COUNTY/CITY 73:3
couple 69:2
course 14:21 16:13 47:16
courses 55:11
court 8:1 9:25 38:11,13 42:3,7 71:3,6
cross-boundary 41:3,4,5 41:8,10
CRR 1:16
CSR(IL) 1:16
current 10:17 13:1,5 15:21 46:21,23
customary 71:15
customer 12:2
customers 58:5

D

D 2:12
date 34:20 35:6,7 51:21 63:13 69:10 72:3 73:8 74:8 76:7
dates 6:20 7:1 29:23
day 73:4,16
deal 28:7 29:9,9 31:10,20 31:25 36:12,25 68:17
dealing 67:23
dealt 17:11 27:13 37:24 37:25 42:16 46:17 61:18 62:1 67:24 68:4
debating 42:11
decision 16:25 21:10 43:25 64:12
decisions 23:15
dedicated 53:3
defer 67:16
deferred 67:10
define 17:22 19:2,19 20:1 49:25
defined 19:8 20:9 50:18 60:19,21 66:6,9 67:9 68:24
defining 35:18
definitely 20:2
definition 9:13 17:12,18 17:20,25 18:10 19:11 19:15 20:18 21:17 22:4 22:6 24:10 26:7,8,11

27:7 29:12 30:4,6 35:11 36:11 38:22 41:5,15 47:17 51:1 62:8,23 63:8 63:11,23 65:21 68:14
definitions 50:11
deleted 52:4,5
Denise 10:4
denying 21:11
Department 2:13
depends 9:13
Deponent 72:10 74:7
deposed 3:16
deposition 1:9 3:1 7:25 69:22 71:11 72:2,6,11 73:7,11 74:1,8,12 75:10
describe 49:25
described 36:9 49:11,18 60:12
describing 37:18
desire 43:4 58:3
desired 43:21 58:13
Determine 8:18
determined 39:11 68:6
develop 57:8
diagrams 50:21,25 51:15 53:4,5,7,16
difference 33:4
differences 23:16 24:22
different 25:6 33:1 46:24 57:17
differing 23:20
direct 8:14
direction 70:7
directly 54:9
disagree 27:15 47:10
disagreements 36:16,18 36:20 38:1,19 44:1 46:9 46:14
disagrees 27:13
disclosure 71:1,5
discuss 39:8 50:7 51:13 51:17 57:16
discussed 13:23 27:21 32:9,10,12 39:13 50:10 50:17 61:20 62:3,5,22 63:7
discussing 17:6 18:16 63:11
discussion 17:5 20:15 38:7 62:25
discussions 4:11 5:2,11 16:4 21:25 36:16 37:10 37:12 39:5 40:12 42:16 43:14 48:7 52:25 57:22 58:2 60:24 61:25 62:8 63:16,20,24 66:7
dispute 25:10 34:19 35:6 35:7
District 9:18
docket 1:5 4:7 11:8,9,11
document 4:15 16:1 31:12,16 32:18
documentation 34:6
documents 52:14
doing 10:20 11:16,20 57:10
Douglasville 3:11,13
draft 4:12 5:20 28:15,25 30:21
drafting 11:5
drafts 5:15,17 6:11,13
draw 50:25 51:15
drawing 50:21
drew 53:16
duly 3:3 73:5

E

earlier 21:7 29:13,18 30:4 59:3 67:22 68:13
easier 8:10 28:17 65:5
educational 55:8
either 15:9 30:22 34:5 46:4 49:7 50:22 61:18 66:13
employ 70:12
employed 21:22
entered 74:14
entire 74:11
Errata 74:1,16
error 9:7
ESQUIRE 2:3,12
essentially 19:11
establish 59:11,12,13,25
established 30:15 32:24 33:6,8 59:5,7 60:3,9
et 6:20 7:18 74:5
events 5:2 48:4 52:22
eventually 25:9 29:1 46:6
evidence 70:9
exact 36:15 40:13 56:2
exactly 4:22 13:18 17:25 18:24 38:6,21 42:10,19 47:16 63:14
EXAMINATION 3:5 69:4
examined 3:4
exception 29:14 30:3,7,9 30:10 31:13 32:15,22 35:4,8,13 43:8 44:1 63:24
exclusion 32:4 36:8,12,25 37:23 39:22 40:24,25 47:18 50:2 51:1 61:2 62:9 63:22 66:8 68:15 68:17
executed 14:8,12 16:21 24:14 47:2 63:5
executing 64:6
execution 13:11 17:14 29:21
exhibits 8:12,18,19,20,22 9:2,6
existed 36:17,18 44:2
existing 15:12
experience 33:19
expert 12:15,17,18 13:19
expertise 13:22
Expires 73:19
explain 19:22 37:7
explained 47:15
explanation 19:3 48:9,12 48:13
explicitly 42:17
express 42:22
extent 35:1 61:4
e-mail 51:22

F

face 54:18,18
face-to-face 40:17,18 54:16,21
facilities 49:11,18,21,22
facility 49:5,9,25 58:4
fact 39:15 48:16 51:17 58:12 63:3
facts 6:21,25
fair 15:6,24 26:19 34:5 45:20,22 46:25 67:25
familiar 21:24 33:20 55:1 55:3,24,25 59:20
far 7:1
fault 31:4
favor 67:8
FCC 33:8 39:12,18 46:19 47:7 59:7,11,13,20 60:8 64:23 67:16,16 68:24
FCC's 25:11 31:23 32:1 39:5,7 59:15
feasible 57:17
Feature 68:23 69:15,15
File 74:4
filed 4:7 17:8 22:17 24:12 24:14,17 27:12 44:5,12 44:14 45:22 46:13 47:4 47:12,24 60:22
filing 14:3 24:10 44:21 45:2,9,11,12 62:23
filings 44:15 45:5
final 16:20,23 18:11,23
finalize 16:19
finalizing 27:2
find 7:3 58:6 65:12 67:21
finish 68:8
firm 5:20 8:21 34:2
first 3:3 4:12 5:12,20 6:11 6:13 7:25 22:1,8 29:15 30:20,20 31:12 32:14 32:21 34:12 35:2 36:7
Florida 10:20,23 11:3,6 11:11
focus 25:23
focused 36:1
followed 11:4
following 29:2 71:4 74:14
follows 3:4
footnotes 57:10
foregoing 70:3,7 71:9 73:6
form 8:20 69:18 72:8
formalities 57:9
format 4:21
forms 18:14
forth 15:19 18:14 27:17 52:22 53:11
fortunate 35:24
found 52:21 64:22
Four 12:14
frame 22:9,11 29:24 34:23 37:2 40:12 51:5 52:9 58:16 62:11
front 4:6
full 3:8
FULTON 70:2
further 69:21 70:10

G

GA 2:7,16
Gallo 71:8,9,13 74:3
general 55:13 56:18,25
generally 55:24 56:1,8 57:2 60:14,15,16
Georgia 1:14 3:12 70:1 71:4,6
give 8:3 20:18
given 31:16 32:8 54:8 70:9

glanced 34:1
go 23:9 28:5 40:13 46:22 57:25 60:19 62:7
going 8:9 14:11 15:18 60:20 62:14 67:17
good 3:7 8:5
Government 10:19 44:19 45:3
greed 7:1
Greg 10:11
ground 15:10
group 1:3 57:19 58:23 68:23 69:15,15
guess 5:24,25 6:7 9:13

H

half 12:14 46:4
handling 36:13
happening 46:24
happy 4:4
heard 33:18 41:2,7 49:1 49:15
hearing 41:10 44:24 45:14 70:9
hereof 72:5 73:9
hey 20:1
highlight 15:12,15
history 62:16
his/her 73:7
holder 27:3 63:17
hole 28:17
home 3:14 16:12 18:23 69:8,11

I

IC 18:2
ICA 14:4 17:8 18:1,5 26:9
identical 20:13 24:6,19
identified 47:3
ILECs 59:18
impacted 46:21 47:8
implement 23:6 25:11 27:4 39:8
important 3:23 8:11 11:7
include 15:4
included 28:6 29:14 32:3 32:8
includes 61:13
including 36:24
inconsistent 7:7
indicated 69:6 74:15
information 4:19 39:10
initially 30:6
inserted 4:16
inside 64:5
Insuring 11:2
intended 47:17
intent 25:5 43:2 57:7
inter 54:12 65:9
intercarrier 26:15
interconnection 12:21 13:12 14:14 15:5 18:3,7 22:2,18 23:10,22 26:12 35:17 41:12 44:6 47:2 48:24 53:2,17 57:24 58:12,13,21,23 62:1
interested 70:13
interLATA 64:25 65:3,10
internal 21:25 50:8 55:10 60:25 62:8
Internet 27:9 28:4,22 29:10 36:14 37:1 38:24 41:17 48:20 66:25
interpretation 54:24 55:14,20 56:8,20
interpreting 66:4
interrelated 53:25
interrogatory 33:23 34:7 34:17 35:2
interrupt 62:6
interstate 39:1,16,19 64:15,20,21 67:1,2,10 69:17,20
intraLATA 22:19 58:14 64:20
intrastate 64:25 65:3,10 69:17
involve 53:16
involved 11:5 21:23 57:5
IP 27:21 28:8 36:20 37:9 38:3,4,20 39:15 43:5 48:20 67:9,11
ISP 25:10,12 26:23,25 27:4,4,20,21 28:21 29:8 30:25 31:1,11,17,21,23 31:25 32:1,11,19 34:24 36:13,19,25 37:8 38:3,4 38:19,23,25 39:5,9,9 41:16 43:4 48:20 63:17 68:18
issue 16:8 17:1,10 21:9 22:8 23:6 26:24 27:1 28:4,8,20 29:8 31:11,21 33:14 39:14 44:25 50:3 53:17 55:17 67:16 68:3 68:4
issued 46:20 67:6
issues 7:2 11:7 13:21 15:23 17:11 19:25 27:20 28:16,22 29:1 37:1 43:1,3 44:23 45:19 46:1,7,7,10 47:1,4 48:19 53:2 64:5 67:23
items 15:4 43:6,7 45:24
IXE 59:19 64:18
i.e 39:14

J

January 1:12 3:2 4:8 74:8
Jeff 4:23 13:16
job 8:10 9:17,20,23 10:6 10:17,17 11:1,11,14,16 12:3,12 13:4,5,6 44:16 55:6
jobs 9:14 10:12
Judicial 71:3
July 14:19 41:12 45:16 47:3 51:21 69:12
June 52:24 53:16
June/July 40:12 52:8
jurisdiction 73:17
jurisdictional 27:14

K

keep 46:22 62:3
keeper 16:1
kept 15:18
kin 70:10
kind 24:1 69:16
kinds 49:6
King 4:24 5:12 6:11 7:11 7:19 13:16,16,19,25 61:10,20,21,25 63:10 63:21 64:12 67:23 68:2
King's 5:20 7:4 61:13
know 3:21 4:2 6:1,2,8,20 7:12,14 16:9 19:5,7 21:20 22:1,7,11,13 25:1 25:2 33:12 39:20 40:16 43:19 48:23 54:23 56:6 56:6,24 58:16 59:24 60:6,11 61:22 64:16 66:4,10 69:10
knowledge 56:19,25
knows 25:1

L

language 15:7,12,16 16:2 16:5,21,23 17:7,10,24 18:12 19:15 22:24 23:7 23:11,12,14,20 24:4,5 24:18 25:5,15 26:9,13 27:1,3,4,15 28:5,6,15 28:25 29:2,10,14,18 30:3,5,18,19,21,23,24 30:25 31:1,6,7,13,18,20 31:22,25 32:7,8,11,11 32:12,15,20,22,25 33:1 34:12,23,24 35:8,10,11 39:21,25 40:1,2,23,24 43:22 44:1 46:15,21,23 47:8 50:3 51:14 54:9,10 56:3 57:9 58:5,20 61:16 61:17 63:5,17
LATA 21:17 22:3,5 23:1 30:4,5,7 34:13 35:3,10 35:12,13 36:8 39:22 43:2,23 61:1 63:6
lateral 13:6
law 5:20 8:21 10:19 44:19 45:2
lcecil@wcsr.com 2:9
lead 13:10
leading 12:23 13:11
led 5:3 12:20
Lee 1:16 71:19
Legal 2:13
legislative 12:7
Legislature 12:9
lengthy 4:11,18
let's 31:25 37:12 56:2 58:1
level 60:8,8
levels 42:15
lie 48:1
limited 65:20
line 9:8 25:25 28:14 30:11 44:4 74:20,23 75:1,4,7 75:12,15,18,21,24 76:2
lines 28:14
little 11:15 32:25
LLC 1:3
lobbyist 12:8
local 9:18 21:17 22:4,6,19 23:1 24:10 26:7,8,10,11 26:16 27:7 28:11 29:11 30:4,5,7 35:10,12,14 36:8 38:23 39:3,9,18,22 40:24 41:14,17,18 43:2 43:23 47:17 51:1 53:2 58:3,14 62:4,9,23 63:6 63:8,23 68:14
located 10:22
long 11:13,21 12:12
look 24:24 40:14 56:2

58:18
looking 27:23
LORETTA 2:3
lot 8:9 28:17 34:6 41:23
lots 35:16,18,21
Louisiana 12:6,9,10,13
lying 47:22

M

maintained 63:4
maintaining 16:2
maker 64:12
making 16:3 21:11,13 37:21 39:24
Management 9:19
manager 9:18 10:18 11:8 11:9,11,17,18 12:2,6 13:6
March 9:21 10:16 13:13
marked 47:10,10
marketing 12:3
markings 52:13,16
material 29:16
matrix 62:24
matter 13:19,22 71:9 72:3 73:7 74:12
mean 6:23 14:6 27:24 30:10 49:4 60:17 66:5
Meaning 15:12
meant 33:16 36:25 50:5,9 50:15
meeting 40:17 52:12 53:6 53:8 54:16,20,21
meetings 14:1,10 35:16 35:23 40:19 50:19 52:8
members 50:23 66:20
memory 25:1,3
mentioned 69:14
Michael 37:16
Michelle 9:24
mind 27:19 53:21
minute 19:2 68:8
mirrored 63:19
Mississippi 11:19 12:1 13:12 22:24 23:25 24:3 24:4,14,18 58:1,6 63:5
modification 4:14
modifications 4:14,16 9:1
modify 15:9 23:14
morning 8:1
moved 10:14

N

name 3:8,10 74:16
narrows 29:22
national 10:15
nature 9:1 27:14 39:1
necessarily 5:21
necessary 52:3 54:11
need 3:24,25 5:3 22:14 23:20 31:4 51:23 67:21
needed 7:4 39:17 41:15 47:8
negotiate 14:23 23:4,21 36:21 44:22 45:18 46:1 46:3,6
negotiated 15:4 23:25 27:1 38:18 54:18,19
negotiating 10:14 14:10 16:13,20 18:12 19:5 35:17 36:1 37:15 42:11 50:23 64:7,11 66:20,22
negotiation 13:17 14:1 18:23 36:2 50:19
negotiations 12:21 13:10 13:20,23 14:17,22 15:21 23:3 28:7 42:25 43:6,13,14 47:16 54:20 57:15,24 58:9 62:15 67:24 68:3
negotiator's 55:6
Network 12:15,18
new 15:15
Nicole 2:22
non-region 23:4
non-state 23:9,12
North 1:1 4:7 12:22 14:3 14:8 16:21 22:3 24:11 24:17 27:12 28:9 38:2 44:9 45:14 51:10 58:9 58:10 62:18 63:4,9 67:5
Notary 73:19
notation 53:4
notations 48:3,5
note 40:13
notes 35:22,25 36:4,6 40:15 48:7 52:8,11,12 52:15,21,24,25 53:9,20 53:23
numerous 61:24

O

O 3:11
oath 21:4
Object 61:4 69:18
objective 21:21
Obviously 55:25
occasion 14:23 16:11
occurred 39:5
October 45:23
offer 41:5 62:3
offered 52:4
office 4:20 49:7
Offices 49:8
Okay 3:13 4:10 5:5,8 6:6 6:9,23 8:16 9:10 10:9 11:13 12:4 14:20 16:15 16:17 21:7 22:15 24:22 33:4 35:20 37:11 40:9 42:22 43:21 46:18 48:5 48:12 51:25 52:20 55:10 57:12,21 60:5 61:7,24 62:10,22 64:4
once 16:16 44:21
open 17:13 43:1 45:25 46:7,10,15 47:10
opportunities 55:8
opposition 51:14
order 23:19 25:12 27:4 31:23 32:1 39:5,7,9 44:25 46:20,21 60:2 67:6
ordered 60:4
organization 10:14 44:20 45:3
original 59:4 62:7 74:18
originated 30:13 32:23
originates 23:1
originating 59:16
originating/terminating 35:12
other's 5:17 6:11
outside 55:11
outstanding 44:23
O.C.G.A 71:12

P

P 3:11
page 9:8 21:16 25:8,19,21 25:22,25 28:1,13 48:8 53:14 56:4,10,13 72:4 73:9 74:20,23 75:1,4,7 75:12,15,18,21,24 76:2
pages 22:13 27:5 51:16 51:19 52:6 70:7
papers 21:24
paragraph 26:4
paraphrasing 34:14 56:22
part 13:16 20:14,23 21:1 22:10 25:24 26:23 27:8 28:3 29:15 31:15 32:5 32:16,18 33:5 43:4 44:16 45:20
particular 17:9 57:18
particularly 53:2
parties 15:3,11 16:6 22:8 23:2,8,21 25:9 26:1,6 26:15,23 27:8 28:1,3 29:8 34:13 35:3 36:13 37:10 39:21 41:11 45:18,25 46:15 47:1 48:24 53:15 57:5,6,7 68:6 70:11,13 72:10
party 15:7,8,8 16:1 33:7
party's 25:21
pay 26:15
paying 61:18,19
Peachtree 1:13 2:5,14
Peacock 1:10 3:1,3,7,10 8:1 68:13 69:6 72:2 73:5,13 74:7 75:10 76:8
pending 17:14
people 37:18
period 10:5 62:20
permitted 45:8
personally 7:24 73:4
pertained 63:8
petition 22:17 24:11,13 27:11 45:6,12 46:12,14 47:4
petitions 44:13,18
phone 40:17
phrased 6:4
Phyllis 1:16 71:19
pin 52:17
pinpoint 63:13
place 5:12 27:3 31:1 34:24 63:17 72:4 73:8
pleadings 44:14
please 3:9,24 42:2
point 23:22 53:1,17 56:9 57:13,23 58:12,19,21
policy 21:24
position 13:2 18:18 38:25 39:3,17 43:22 66:24 67:4,13,17
practice 36:3,5
preface 19:3,4,9 20:6
preference 58:22
preferred 58:20
preliminary 23:2
preparation 55:7
prepared 5:20 8:12,22 21:4
preparing 16:19

present 2:20 37:17
presented 5:15 35:14
prevent 41:15
previously 15:22
pre-file 67:19
price 68:5
pricing 61:14
prior 10:10,16,19 11:16 11:20 12:4,5 14:3,5,18 14:19 15:20 17:14 24:2 24:10 29:20 44:24 51:8 51:10 55:5 62:23 64:5 66:15
privilege 61:6
Probably 64:23
problem 16:8
procedural 11:2
proceeding 44:2 45:14 67:7
proceedings 11:4 44:21
processes 57:8
prohibited 71:12
promoted 13:8
promotion 13:5,7
proofing 11:5
proper 55:1,19
proposal 32:6,7,19 59:4 61:1
propose 15:7
proposed 15:13 29:1,11 30:17,24,25 31:6,10,20 31:25 32:14,18,21 34:12 36:7 39:25 43:8 50:2 54:3 59:6
proposing 36:11 54:7 62:2
protect 40:2
protocol 27:9 66:25
provide 29:17,18 51:21
provided 4:13 29:13,19 30:24 31:14,14 33:24 34:20,22 35:2 63:12
provides 22:25 58:15
provision 60:14
provisions 51:17,23 52:1
PS 47:7
PSC 33:8
Public 11:3 12:10 73:19
published 21:25
puncher 28:17
purpose 40:23
purposes 6:17 20:25 22:20 28:12 41:18
Pursuant 71:1
put 4:20 15:7 27:8,17 28:2 30:25 61:16
putting 18:14
P-55 1:5 4:7
p.m 1:12

Q

question 3:24 6:5 8:3,7 31:5 34:25 38:9,14 41:20,22,25 42:4,8 43:10 49:13,20 51:9 56:12 62:7 66:10 69:13
questioned 52:2
questions 16:22 19:6 69:3 69:21 70:5
quote 25:20 28:1 29:4 51:18 54:25 55:15 56:16,23
quoted 25:25 29:16
quoting 55:22

R

rate 39:11 65:12 68:5
rates 18:15,20 20:8,10 26:16 27:18 40:5 41:18 48:19 59:15,17 60:1,9 60:19,22 62:1 63:18,19 64:3,16,21,22 65:1,1,1 65:4,7 71:15
rationally 60:17
reach 15:10 38:19
reached 14:6
read 19:11 25:4 29:15 31:13 33:7,23 34:7 38:13 42:1,3,5,7 47:11 47:14,20 72:10 74:11 74:13
reading 53:20
reads 29:16
realized 51:22
really 17:2 25:4 30:21
reason 4:2 34:18 35:6 54:8 74:22,25 75:3,6,9 75:14,17,20,23 76:1,4
reasonably 60:18
reasons 74:15
recall 19:17 20:4,11 21:3 21:4,8,13,18 34:10,15 39:23 40:22 50:20 51:3 62:25 69:8
recess 59:1 68:11
recip 18:20 20:10 41:18 48:18 64:2
reciprocal 18:15 26:18 27:18 28:11 39:4 40:4 42:15
recognize 56:23
recollection 18:22 20:25 37:20 40:21 48:3 52:22 53:10
recommended 67:6
record 15:2,2 18:6 20:24 58:24 74:15
redirect 69:2
redline 15:11,15 52:13
redlines 52:16 58:18
reduced 70:6 72:8
refer 14:10,12,13 22:14 49:11
reference 48:6 58:22 67:20
referencing 56:14,16
referred 32:4
referring 18:6 28:21 52:18 68:22
refers 49:21
reflect 15:19 18:6 46:22
reflected 25:16
reflecting 25:15
regard 20:5
regarding 5:1,13 7:1 17:17,20 18:24 19:7 22:17 23:10,17 25:10 27:9 38:22 42:25 48:13 48:17 53:1 58:20 59:21 60:25 61:1 63:25 66:25
regional 10:15
Regulations 71:2
regulatory 10:18,20 11:17,18 12:7 13:6 21:23 30:15 32:25 33:7 33:19 46:24 59:6
reject 15:9
related 23:22 38:23 47:6 50:25 54:10
relationship 54:12
relative 28:16,25 55:17 55:21,23 61:5
released 39:6,7
remained 16:22
remaining 38:1 45:25
remand 32:1
remat 25:12
remember 16:16 17:4,5,6 17:9,16 35:9 38:6 41:9 43:19 45:7 53:19 69:7
remembered 53:22
remembrance 17:24 29:25 34:2 48:3 53:7
repeat 3:24 38:12 41:19
repeated 38:9
report 10:7 71:8
reported 10:10 70:4
reporter 10:1 38:11,13 42:3,7 71:7 72:7 74:10
reporter's 8:2
reporting 10:15,15 71:3
represent 70:7
representative 71:7
represented 40:14
representing 41:16
request 33:10 51:25 52:3 74:13
requested 38:14 42:4,8 72:6
requirements 11:3
requires 61:5
resolution 26:23,25 28:3
resolve 38:1 44:23 46:16
resolved 25:9 45:24
respect 17:1 39:20 69:13
Respondent 1:8
response 19:21 20:16 34:11,17,19 35:2 44:14 45:13
responses 33:24 34:8 44:12,17
responsibilities 10:25 12:8
responsibility 12:2 44:20 61:13 67:25
responsible 11:22 16:1
responsive 45:5 66:10
rest 31:19
restroom 4:1
result 70:14
review 4:13 8:23 16:7 44:16 45:1,4 52:16
reviewed 5:17 6:11,14 45:9 52:7 53:10
reviewing 34:11 45:7
revisions 7:11 9:5
Rice 2:4
right 4:22 7:8 13:17 25:13,17 29:5 30:2 32:2 33:2 34:25 35:18 44:4 44:13 47:19 49:19 51:23 52:9 53:17,18 54:1 63:16 65:4 68:20
role 44:22
room 54:21
Rouge 12:5

RPR 1:16
rule 23:19
ruled 39:18 67:7,17
rules 54:23 55:13,19,25 56:7,19,25 71:2
ruling 30:15 32:24 33:6 47:7 59:6
run 4:1

S

Sandridge 2:4
saw 30:21
saying 5:22 17:5 20:12 21:3,5 27:24,24 40:22 43:20 51:22
says 9:8 35:1 53:25 55:24
second 9:9 14:13,13 22:18 23:9,10,18 41:12 44:6 45:20 47:1 50:8 58:25 63:9
section 9:8 25:16,20,24 29:2 51:18 53:24 54:1,7 65:20
see 26:2 28:16,18 34:16 40:14 48:10
seminars 55:6,8,11 56:21
send 8:23 15:8
sending 16:4
sent 4:15 51:21
sentence 26:5,14,22 27:23 27:25 28:2 29:5,12 31:10 33:5 36:23 37:22 48:22 53:24 54:3
serve 58:4
service 11:3 12:10 60:1
services 9:18 18:17,19 27:16 28:9 33:21 36:19 37:6,9 38:3,5,20 39:14 40:4 42:12,12,14 48:18 58:4 60:11,19,21 64:1 68:19,21,24
serving 15:25
sessions 14:1 66:22
set 24:4 32:8,10,12 34:11 52:22 53:10 59:14,15 59:17 72:4 73:8
sets 24:5 26:9,14
settle 30:25
settlement 23:21
Sheet 74:1,16
Shiroishi 2:21 14:23 16:12,24 17:2,6,17 18:9 18:22 21:8 37:16,21 38:17,22 39:24 40:7,22 47:12,22,24 50:20,22 50:25 51:20 54:14 66:19 69:8,11
Shiroishi's 20:16 47:14 48:4,9 53:7
Shore 2:12 6:3 7:13 24:25 25:7 37:3 38:11,16 42:1 42:21 51:6 55:18,23 56:5,15 57:3,11 58:24 59:2 60:15,23 61:8 62:12,16,19 64:14 68:7 68:10,12 69:1,14,18
show 54:11 57:7
sign 23:8,11 72:11
SIGNATURE 76:7
signed 13:13 41:12 46:5 48:24 50:9,15 61:9 62:13 65:25 74:16
signing 51:10 66:15
similar 11:9 24:5 29:15 33:9
Simple 63:3
single 68:3
sir 5:14 24:20 68:1
sites 57:10
sorry 14:15 17:19 18:3 30:2,11 31:14 41:19 42:5 49:13 51:8 56:17 61:24 62:10 65:9 67:10
sort 4:18 15:3,21 55:11
source 56:24
Southern 1:3
specific 23:19 39:24 63:20 65:10
specifically 48:19 56:24
spell 9:25
spelling 7:17
spilling 25:21 51:19
spring 44:7
staff 11:6
stages 16:20 18:11,23 19:5 23:2
stand 24:1
standard 30:22
start 8:6 9:20 37:12 58:1
started 9:22
starting 12:23 25:25 26:13 28:14
starts 26:1,6 36:24
state 3:8 11:19 12:1,6 13:15 21:15 22:12 23:6 23:18,18,19 33:8 46:19 47:7 52:7 59:7,11,12,13 59:17,20,25 60:3,4,8 63:3 65:10,15,16 68:25 70:1 73:2
stated 70:4
statement 21:12,13,14 22:22
statements 37:21 39:24
states 1:3 11:19,22,23 12:23 23:7,23 24:6,6 44:10 73:6
stay 15:21
Stevens 5:9 40:15 41:21 48:7 52:11,15,25 53:20 53:23
Street 1:13 2:5,14
stricken 52:1
structure 42:19
structuring 57:9
Sub 1:5 4:8
subject 13:19,21 39:1,3
SUBSCRIBED 73:15
subsequent 45:11
substantive 7:16,19 9:1
substantively 20:12
successive 39:2
suggest 28:10 39:16
suggested 45:25
suggestions 7:10,15,20 8:19
Suite 1:14 2:6,15
summer 63:15
supervise 8:17
supervision 8:15
support 52:21 53:10
supported 43:22
sure 3:18 6:21 31:3 32:17 38:10 44:3 66:12 68:9
swap 65:5
swear 21:4
switched 17:12,21,23 18:1,10,25 19:2,7,15,20 19:23 20:1,7,8,9,18 30:14 32:5,15,23 33:16 33:20,21 34:13 35:5 36:9 39:2,23 42:13 47:18 48:14,22 50:4,9 50:10,13,14,17 51:2 58:3 59:5,10,15,19,21 59:25 60:7,10,18,20 63:12,22 64:23 65:11 65:13,19,21 66:4,5,8 67:12 68:15
sworn 3:4,22 73:6,15

T

tacked 30:3,8
take 3:14 4:1,17 5:12,19 7:24 8:22 14:22 16:7 18:18 34:10 35:22,25 36:3,5 45:4 47:21 68:7
taken 72:3,7 73:7 74:12
talk 7:4 9:12 14:16 48:9 52:25 64:4 68:2
talked 26:22 48:15 50:13 59:3 67:19
talking 29:5 60:13 68:13
tandem 49:8
tariff 60:22 64:24 65:14
tariffs 60:5,7,9,12
TCG 1:4
team 12:20 13:17 35:25 37:15 50:23 64:7 66:20
technically 57:17
Telecommunications 1:7 74:6
teleconference 54:19
telephone 54:22
Teleport 1:3
tell 3:22 5:11 6:8 16:17 16:24 18:21 29:19 30:18 36:10,11,22 37:11 38:21 41:13 43:10 50:14 54:6,15 61:12,21,22 65:24 66:3 66:14,18
telling 21:8 45:23
term 33:18 41:2,7,10 48:21 49:1 55:16,19 65:20
terminate 57:17
terminated 30:14 32:23
terminates 22:25 23:1 64:16
terminating 59:16,19 64:17 65:8
terms 51:13 52:3,5 57:5
Terry 10:11,12
testified 3:4 19:11,19 21:7 24:7 53:15
testify 42:19
testifying 48:2
testimony 4:6,10,20 5:1,3 5:10,13 6:14,24 7:4,11 7:22 8:13 9:5 11:6 13:15 20:11,17 21:12 21:15 22:12 24:8,16 25:8 26:21 27:6,22 28:2 28:14 29:7 31:24 32:13 40:6,20,21 47:11,15,21

47:23,25 48:8 50:24 51:16 52:7,23 53:11,13 56:9 65:17,18 67:20 68:16
text 8:20
thank 4:3,5 9:10 51:8
thereto 70:6
thing 41:21
things 3:19 15:19,22 27:19 43:24
think 6:10 9:13 10:19 14:19 19:10 20:22 21:16 25:11 27:5,23 43:16 51:19,21 56:11 59:3 60:18 67:21 68:18
thought 56:17
three 68:8
time 11:7 14:5,12 22:9,11 27:2 28:15,19,25 29:24 30:20,21 32:14 34:23 37:2,4,16 40:12 41:11 42:6 44:3 45:8 46:5,8 51:5 52:8 58:16 62:11 62:17,20 63:7 69:7 72:4 73:8
times 16:15 20:21
title 72:4 73:9
today 6:8 10:3 58:7 67:22
told 3:18 4:19 20:21 37:12 43:16 54:13 58:17
toll 58:14
topic 32:10
totally 5:23
touched 53:15
tracked 17:25 19:14,14
tracking 58:15
traffic 17:12,21,23 18:10 18:14,25 19:2,7,18,20 19:24 20:1,3,7,9,19 21:17 22:4,6,19,25 24:10 25:10 26:7,9,10 26:12,24 27:7,14 28:22 29:8,10,11 31:2,11 32:1 36:13,14 37:1,8 38:23 38:24 39:1,9,10,10,19 41:3,4,5,15,16,17 42:13 43:4 47:17 48:14 49:6 50:1,11,18,18 51:1 57:18 59:14,16,19,22 62:9,23 63:6,8 65:21 66:5,8 68:14,18,19 69:16,17,17
transcript 8:10 70:4,8 71:15 72:11 73:6,10 74:11,18
transit 58:14
transpired 59:1 68:11
transport 49:5,6 53:3 58:13
transported 50:12 59:23
transporting 49:8
treated 22:19 28:11
treatment 25:10
trition 39:13
true 26:8,11 70:8 73:10
trunk 49:5 57:19 58:14
trunking 49:1,10,12,16 49:20
truth 3:22
try 8:4 15:10 45:18 46:22 64:2
trying 38:6
two 11:24 27:19,20 43:3,7 48:19 49:8 57:4 68:7
typed 4:12
types 57:17
typewriting 70:6
typewritten 72:8
typically 15:4
typing 5:16
typographical 9:7
typos 7:17
T-E-R-R-Y 10:11

U

Uh-huh 31:8 64:19
ultimately 23:8 33:1
understand 3:23 8:8 15:1 17:2 21:9 27:6,10 31:9 65:17,18
understanding 12:19 41:14 42:23 45:10 49:23 65:25 66:15 68:17
updated 47:9
use 14:11 27:3
uses 55:18
usual 71:14
usually 49:7
UTILITIES 1:1

V

verbal 36:1 43:14
voice 27:9,21 28:4,7,21 29:10 36:14,19 37:1,8 38:3,4,20,24 39:14 41:16 43:5 48:20 66:25 67:8,11
VOIP 68:18
vs 1:6 74:6

W

wait 8:2,5 39:17
want 5:25 6:7 9:12 15:1,2 18:5 20:24 24:3,25 25:23 34:16 38:8 39:20 43:18,19,19 52:17 56:6 56:24 57:12 61:22 62:6 68:7
wanted 6:21 19:24 30:18 34:23 37:22 39:15 45:19
wasn't 31:4 51:12
way 6:5 15:10 36:13 55:1 55:4 62:14 67:25
went 23:13
West 1:13 2:5,14
we're 8:9 19:5 27:23
we've 29:5
white 50:21
wide 21:17 22:3,5 30:4,5 30:7 34:13 35:4,10,12 36:8 39:22 43:2,23 61:2 63:6
willing 51:12 67:15
Willis 37:16
wish 15:16
wished 15:13
WITNESS 6:2 25:4 38:10 38:15 42:9 56:4,13 57:4 60:17 61:7 64:11 68:9 69:20
Womble 2:4 4:12,15 5:16 8:14
word 24:19,19 35:21 41:25,25
words 19:22 20:23 25:6 26:18 36:15,23 42:10 42:18,24
work 3:11,14,19 11:20
working 11:6
wouldn't 34:4
write 41:24
writing 15:7
written 42:10
wrong 48:1
wrote 4:10

Y

Yeah 24:25 41:24 62:16
year 4:8 11:15 12:3
years 11:24 12:14
y'all 14:13 61:23

Z

Zalis 10:4,10
Z-A-L-I-S 10:4

1

10 25:8,19 30:11
11 25:21
12 25:22,25 27:5 28:1
12:11 1:12
1201 1:13 2:5
1376 1:5 4:8
14 27:6 28:13
16 48:8
17 69:12
17th 4:8
18 51:16,19,21
19 14:19 51:16,20
1996 21:18,21
1999 9:21 10:16 12:24 13:4

2

20 1:12 3:2 52:6 74:8
2000 44:7 45:12,16,23 46:4 47:5
2001 13:13 14:2,19,22 25:12 30:1,2 34:15 41:13 45:17 46:4 47:3 51:21 52:8 63:15 69:12
2003 1:12 3:2 73:16 74:8
21 52:6 53:14
22 9:8 34:15 35:5
24 9:8
27 25:12

3

3 25:17,25 28:14 29:3 51:18 61:18
30154 3:12
30309 2:7
30375-0001 2:16
335-0765 2:17
3500 1:14 2:6
3587 74:4

4

404 2:17
404)888-7437 2:8
4300 2:15

5

5 27:23
5-14-37 71:12
5.1.1.1 27:8,24
5.3.1 54:1 65:20
5.3.1.1 25:16,24 27:25
29:2 36:23 39:21 54:10
5.3.3 53:24 65:22 66:6
5.3.5 54:9 66:9
5.4 51:18

6

6 21:16 22:13
6th 52:24 53:16
675 2:14
6994 3:11

7

7 22:13

8

8(B) 71:2

9

96 21:22 22:9
97 22:9

ORIGINAL TRANSCRIPT

BEFORE THE
NORTH CAROLINA UTILITIES COMMISSION

AT&T Communications of
the Southern States, LLC,
Teleport Communications Group, Inc.,
and TCG of the Carolinas, Inc.,

Complainants,

DOCKET NO. P-55, Sub 1376

vs.

BellSouth Telecommunications, Inc.,

Respondent.

DEPOSITION OF

ROBERTA STEVENS

January 20, 2003
10:39 a.m.

1201 West Peachtree Street
Suite 3500
Atlanta, Georgia

Phyllis A. Lee, CCR-B-2321, RPR, CSR(IL), CRR

FLORIDA PUBLIC SERVICE COMMISSION
DOCKET NO. 020919-TP EXHIBIT NO. 7
COMPANY/ WITNESS: NCUC-Depo. of R. Stevens
DATE: 5-07-03

Alexander Gallo Associates, Inc.
COURT REPORTING VIDEO SERVICES

• ATLANTA'S TECHNOLOGICAL LEADERS IN LITIGATION SUPPORT •

ATLANTA, GEORGIA WASHINGTON, DC CHICAGO, ILLINOIS NEW YORK, NEW YORK

Telephone (404) 495-0777
Facsimile (404) 495-0766
Toll Free (877) 495-0777

Complimentary Conference Rooms
Throughout Georgia And
Major Cities Nationwide

500 The Candler Building
127 Peachtree Street
Atlanta, Georgia 30303

www.galloreporting.com

1 APPEARANCES OF COUNSEL

2 **On behalf of AT&T:**

3 LORETTA A. CECIL, ESQUIRE

4 Womble Carlyle Sandridge & Rice

5 1201 West Peachtree Street

6 Suite 3500

7 Atlanta, GA 30309

8 (404)888-7437

9 lcecil@wcsr.com

10

11 **On behalf of BellSouth:**

12 ANDREW D. SHORE, ESQUIRE

13 Bellsouth Legal Department

14 675 West Peachtree Street

15 Suite 4300

16 Atlanta, GA 30375-0001

17 (404) 335-0765

18 andrew.shore@bellsouth.com

19

20 **Also Present:**

21 Beth Shiroishi - BellSouth

22 Nicole Bracy - BellSouth

23

24

25

1 Deposition of Roberta Stevens

2 January 20, 2003

3 ***ROBERTA STEVENS***, being first duly

4 sworn, was examined and testified as follows:

5 **EXAMINATION**

6 **BY-MR.SHORE:**

7 Q. Ms. Stevens, good morning.

8 A. Good morning.

9 Q. I'm Andrew Shore. I'm a lawyer with

10 BellSouth.

11 Have you ever had your deposition

12 taken before?

13 A. Yes.

14 Q. Okay. So you know sort of pretty

15 much how it works, then. The only thing I

16 would remind you is that one, you are under

17 oath and sworn to tell the truth. And secondly,

18 if you ever don't understand my question or you

19 need me to repeat my question, would you just

20 ask me to do that?

21 A. Yes.

22 Q. Could you state your full name and

23 your business address, please?

24 A. Roberta Stevens, 567 Cascade Drive,

25 Lilburn, Georgia, 30047.

1 Q. You work out of your house?
2 A. Yes.
3 Q. Now, I want to talk to you today,
4 at least in part, about the testimony that you
5 filed in North Carolina Docket P-55 Sub 1376 on
6 January 17th, of this year.
7 Do you have a copy of your testimony
8 there?
9 A. Yes.
10 Q. Okay. Who wrote that testimony?
11 A. I did.
12 Q. Okay. Did you collaborate with
13 anyone else?
14 A. I had several conversations with Ms.
15 Cecil.
16 Q. Anybody else besides your attorney or
17 AT&T's lawyer?
18 A. Probably Bill Peacock, my boss.
19 Just -- Bill Peacock.
20 Q. Okay. And what did you talk to Mr.
21 Peacock about?
22 A. Notes from meetings.
23 Q. Okay. Are those the notes that are
24 referenced in your testimony?
25 A. Yes.

1 Q. Okay. Did you talk with Mr. Peacock
2 in preparation for your testimony about any
3 other notes, other than the ones that are cited
4 in your testimony?
5 A. No.
6 Q. Let me just back up for a second.
7 Do you have any corrections or
8 revisions to make to the testimony you filed
9 last Friday?
10 A. Is this where we would bring up
11 the --
12 MS. CECIL: You can answer the
13 question. Anything you want to change?
14 THE WITNESS: Yes.
15 BY MR. SHORE:
16 Q. Okay. What would you like to
17 change?
18 A. Okay. On page 6 line 3, the word
19 "section" should be second. And the same on
20 page 8 line 7, "section" should be second, and
21 that is all.
22 Q. Now, tell me about the discussions
23 you had with Mr. Peacock about your notes.
24 A. For my testimony and his testimony,
25 I was asked to verify dates. And my notes

1 reflect dates and issues that were addressed --
2 Q. Who --
3 A. -- as my testimony.
4 Q. I'm sorry. Who asked you to verify
5 those dates?
6 A. I had to do it for my own
7 testimony. And I probably verified dates of
8 conversations for Bill's testimony.
9 Q. What did you do to prepare for your
10 deposition today?
11 A. Reviewed my notes.
12 Q. When you say your notes --
13 A. And then read my testimony.
14 Q. When you say, reviewed your notes,
15 are you referring to the notes that AT&T
16 produced to us this morning that are your notes
17 from negotiations and meetings with BellSouth?
18 A. Yes.
19 Q. Okay. I don't mind using the term
20 "notes," I just want to be clear on the
21 record --
22 A. Yes.
23 Q. -- that that's what we are talking
24 about.
25 Okay. Did you review anything else

1 to prepare for today?
2 A. No.
3 Q. Did you talk to anyone?
4 A. Did I talk to anyone today?
5 Q. No, in order to prepare for your
6 deposition.
7 A. Just Loretta, Ms. Cecil, I'm sorry.
8 Q. I'm sure she doesn't mind if you
9 call her Loretta.
10 Anyone else other than Ms. Cecil?
11 A. No.
12 Q. Now, you've been, I think you said,
13 in the telecommunications industry for 25 or 26
14 years?
15 A. Twenty-five, correct.
16 Q. And now you are currently a manager
17 in the local access or Local Services and Access
18 Management Group at AT&T, is that right?
19 A. Yes.
20 Q. And you came to that job in February
21 of 2001?
22 A. Yes.
23 Q. And was Mr. Peacock your boss when
24 you started there in February 2001?
25 A. Yes.

1 Q. And has he--remained your boss until
2 the present day?
3 A. Yes.
4 Q. What job did you have right before
5 you came to that position?
6 A. New mother.
7 Q. Okay.
8 A. I had been on a leave of absence
9 for six months prior to that. But my real job
10 before that was I was in consumer marketing.
11 Q. And what was your -- what were your
12 responsibilities in the consumer marketing job?
13 A. We were working on local entry in
14 Georgia.
15 Q. You were marketing -- working on
16 marketing AT&T's retail service?
17 A. Preparing to market AT&T's, yes.
18 Q. And how long were you in that job?
19 A. I believe maybe nine months.
20 Q. And how about prior to that, what
21 position did you have at AT&T?
22 A. I was in a -- I forget what we were
23 called. It was a marketing organization that
24 worked on partnerships with outside companies.
25 For instance, my client was Cincinnati Bell, and

1 we worked on marketing agreements.
2 Q. And what kind of things would you
3 market in conjunction with other companies?
4 A. They sold our long distance services
5 on behalf of AT&T to their local customers.
6 Q. And how long were you in that
7 marketing organization?
8 A. I believe two years.
9 Q. Did you -- before you came into your
10 current position -- is your current position a
11 promotion from your consumer marketing job?
12 A. No, it was not.
13 Q. Was it lateral?
14 A. Yes.
15 Q. Before you came into your current
16 position in February of 2001, did you have any
17 experience on the access side of AT&T's
18 business?
19 A. I had been in Law and Government
20 Affairs for eight years, so I was familiar --
21 Q. Okay. And when were you --
22 A. -- with access.
23 Q. What was the time period that you
24 were in Law and Government Affairs?
25 A. I believe it was 1986 until -- if

1 I'm correct about the eight years, it would have
2 been like '94, 1994.
3 Q. What was your job in that
4 organization?
5 A. The last job that I had -- I had
6 many jobs in Law and Government Affairs, lateral
7 positions, but I supported different states.
8 The last job I had was what we called a docket
9 manager for the State of Georgia. I had
10 regulatory responsibilities.
11 Q. And as a docket manager, what were
12 your responsibilities?
13 A. Filing tariffs. At the time AT&T
14 was trying to seek authority for deregulation of
15 various services. So I was the commission -- the
16 staff contact.
17 Q. Okay. Contact with the Georgia
18 Public --
19 A. The Georgia Public Commission staff.
20 Q. -- Service Commission staff.
21 I think we're talking over each
22 other just a little bit. So maybe we both
23 need to try -- If you could wait until I get
24 my question out, and I'll try to wait until you
25 get your answer out. Otherwise, the court

1 reporter is going to--mad at one of us, and I
2 have a feeling it's not going to be you.
3 Now, what would you do at the
4 Georgia staff? When you say you were the
5 contact, would you talk to them about things
6 AT&T was filing?
7 A. Sure.
8 Q. You said -- we got into this line
9 of questioning because I asked you what your
10 experience had been with AT&T's access business.
11 What exposure did you have to AT&T's
12 access business in your jobs in Law and
13 Government Affairs?
14 A. We were always coordinating with our
15 pricing organization to get reduced access
16 rights.
17 Q. It's always a goal of AT&T, right?
18 A. Correct.
19 Q. Okay. What other --
20 A. I supported witnesses who were
21 testifying to that effect.
22 Q. When you say, you supported the
23 witnesses, what was your job?
24 A. Reviewing testimony, probably typing
25 some of the testimony, providing the backup

1 support that they needed for their -- not
2 creating, but pulling together backup support
3 that they needed.
4 Q. Was it mostly administrative --
5 A. Yes.
6 Q. -- type work?
7 Before you were involved in contract
8 negotiations with BellSouth in 2001, had you
9 ever heard the term switched access arrangements?
10 A. I had heard the term switched
11 access.
12 Q. Had you ever heard the term,
13 switched access arrangements?
14 A. I don't know if I had heard those
15 three words together before.
16 Q. Did you have an understanding of
17 what those three words meant?
18 A. I have an understanding of switched
19 access.
20 Q. And what's your understanding?
21 A. Traffic, you know, that is utilizing
22 Feature Group A, B, D.
23 Q. Would that traffic include interstate
24 interLATA traffic?
25 A. Yes.

1 Q. Would it include intrastate interLATA
2 traffic?
3 A. Yes.
4 Q. Would it include intrastate intraLATA
5 traffic?
6 MS. CECIL: I would like to object.
7 You mean under the terms of the contract --
8 MR. SHORE: No.
9 MS. CECIL: -- or do you mean
10 generally?
11 MR. SHORE: Just generally, what her
12 understanding was.
13 MS. CECIL: Within the industry in
14 general?
15 MR. SHORE: Prior to these
16 negotiations.
17 MS. CECIL: Do you understand the
18 question?
19 THE WITNESS: I do. Say it again,
20 though, please.
21 BY MR. SHORE:
22 Q. Is your understanding of switched
23 access traffic prior to the time that you were
24 involved in these negotiations with BellSouth,
25 drawing on your experience in Law and Government

1 Affairs and perhaps other experience you had,
2 did you understand that switched access traffic
3 would include intrastate intraLATA traffic?
4 A. Between 1986 and maybe 1990, I would
5 say yes.
6 Q. Okay. And what happened in 1990 to
7 change your understanding?
8 A. AT&T was also applying for intraLATA
9 authority. That was one of the issues that we
10 wanted and worked on.
11 Q. Let me make sure I -- is it your
12 testimony that after 1990 intrastate intraLATA
13 traffic would not fall under the umbrella of
14 switched access traffic? Did I understand you
15 correctly?
16 MS. CECIL: Did you say intrastate?
17 Because I'm even having some trouble.
18 BY MR. SHORE:
19 Q. Intrastate intraLATA?
20 A. Repeat the question.
21 MR. SHORE: Can you read it back.
22 (The Court Reporter read back the
23 requested question.)
24 THE WITNESS: No.
25 //

1 BY MR. SHORE:
2 Q. After 1990, did AT&T, to your
3 knowledge, pay BellSouth switched access rates in
4 any state, that you are aware of, for intrastate
5 intraLATA traffic?
6 A. I guess the reason I'm confused is
7 we weren't a local provider. We were a long
8 distance provider that offered intraLATA to our
9 long distance customers.
10 Q. And in the course of providing
11 intraLATA long distance, intraLATA toll, did
12 BellSouth terminate those calls for AT&T in some
13 places, if you know?
14 A. I'm assuming, but I don't know.
15 Q. Where are the terms and conditions
16 of switched access, as you understand it, set
17 out? In your experience in regulatory
18 experience, where would you go to find where
19 those terms are laid out?
20 A. I would assume in the tariff.
21 Q. And where are those tariffs filed?
22 A. Public service commission.
23 Q. State commission, and I guess for
24 interstate it would be FCC, was that your
25 understanding?

A. Yes.

Q. And are the rates -- do you know where the rates for switched access service are set out?

A. In the tariff?

Q. Have you seen switched access tariffs in your career at AT&T?

A. Recently.

Q. So that's what I'm trying --

MS. CECIL: Let me make sure. Are you saying BellSouth switched access tariffs or anybody's switched access tariffs?

BY MR. SHORE:

Q. Anybody's switched access tariffs.

A. Recently.

Q. Okay. Whose have you seen?

A. Sprint.

Q. Have you ever seen BellSouth's switched access tariffs?

A. Not to my recollection.

Q. So your testimony a few minutes ago that you -- I think you said you assumed -- I'm not quoting you, but you think the terms and conditions for switched access service would be in a tariff, that was just based not on

1 seeing the tariffs, but just on your general
2 understanding in the industry of where that
3 would be? Did I understand that correctly?
4 A. What I said was, I'm assuming that
5 the tariffs address all access related issues
6 that are not contractual with a company.
7 Q. Are you aware that AT&T has recently
8 announced that there are going to be layoffs
9 within AT&T here in Atlanta?
10 A. I've read it.
11 Q. Okay. Do you know whether or not
12 your organization is going to be affected?
13 A. I do not.
14 Q. Have you had any discussions with
15 Mr. Peacock or other folks in your group about
16 that issue?
17 A. No.
18 Q. Now, in your testimony on page 3,
19 maybe running over to page 4, you set out what
20 your job responsibilities are in your current
21 jobs, I guess as they relate -- well, you set
22 forth your responsibilities.
23 Would it be fair to say, Ms.
24 Stevens, that your job responsibilities as they
25 relate to Interconnection Agreement negotiations

1 are administrative in nature?
2 A. Yes.
3 Q. For example, one of the things you
4 do, you organize documents and materials for Mr.
5 Peacock and others to use in negotiations,
6 right?
7 A. I'm not sure what you mean, organize
8 materials.
9 Q. Well, what did you mean when you
10 said on page 3 line 17 that you assist Mr.
11 Peacock in organizing documents and materials
12 utilized in negotiations?
13 A. Yes, we have standard language, just
14 as BellSouth has standard language. So I pull
15 together language that AT&T would like BellSouth
16 to consider.
17 Q. And on page 3 you say one of the
18 other things you do are that you attend
19 negotiation meetings and conference calls and you
20 make notes, right?
21 A. Yes.
22 Q. And why do you do that?
23 A. It's my job.
24 Q. Okay. Are there any written
25 guidelines that tell you what to make notes of

1 in Interconnection Agreement negotiations?
2 A. No.
3 Q. When you started your job, did
4 anyone tell you what you were supposed to take
5 notes of?
6 A. No.
7 Q. Has anyone, has Mr. Peacock or
8 anyone else ever told you, Roberta, Ms. Stevens,
9 here is the kinds of things you need to write
10 down in these meetings?
11 A. My job was to assist in
12 negotiations. And so I understood when I
13 accepted the job that note taking was part of
14 that responsibility.
15 Q. So did anyone ever tell you what
16 those notes ought to consist of? Did they ever
17 say, Roberta, Ms. Stevens, write down everything
18 that's said in these meetings?
19 A. No.
20 Q. Is it your practice to write down
21 everything that's said in negotiation meetings?
22 A. Notes are notes. They are not
23 verbatim. I didn't -- it is not my intention
24 to write down every word that is said. But
25 just as you do in school, you note key issues

1 and the discussions that took place regarding
2 those key issues. But, no, they are not
3 verbatim of a conversation.
4 Q. And is it your goal -- is it your
5 objective when you attend interconnection
6 negotiations with BellSouth to write down what
7 you believe are the key issues?
8 A. No, I write down what the key issues
9 are, not what I believe the key issues are.
10 Q. Who tells you what the key issues
11 are?
12 A. Nobody.
13 Q. So when you say --
14 A. I just know what the issues are from
15 the language that we're looking at and
16 considering.
17 Q. And when you take notes on what you
18 describe as key issues, do you write down what
19 the parties say with respect to those issues,
20 typically?
21 A. Yes.
22 Q. You write down everything they say?
23 A. Word for word?
24 Q. Sure.
25 A. No.

1 Q. How do you -- where do you draw the
2 line? What's your objective as to what you write
3 down regarding what parties say?
4 A. Key words is the only -- you know,
5 you don't write all the ands, buts, thes.
6 Q. Do you write down -- I'm sorry.
7 A. No, go ahead.
8 Q. Do you write down all the
9 substantive discussion?
10 A. Yes.
11 Q. Now, some meetings -- I think you
12 said in your testimony you attend some
13 interconnection negotiation meetings where you
14 don't take notes, is that right?
15 A. Correct.
16 Q. I think you said --
17 A. My notes may be on a version of
18 language that we are looking at and we may
19 decide to change a word, and so I write it
20 right on the version that we're looking at, at
21 the time. I don't separately note it in my
22 record book or something. Or I may put it on
23 our issue matrix.
24 Q. Where do you keep the notes that you
25 do take?

1 A. In a record- book.
2 Q. You have a notebook?
3 A. Yes.
4 MR. SHORE: Why don't we mark this
5 now, just so it's convenient in the record.
6 (WHEREUPON, Exhibit-1 was marked for
7 identification.)
8 BY MR. SHORE:
9 Q. Ms. Stevens, you have in front of
10 you what we have identified as Stevens
11 Deposition Exhibit 1. Are these all the notes
12 that you have taken in your Interconnection
13 Agreement negotiation meetings and conference
14 calls with BellSouth from February 2001 through
15 the present time?
16 A. Yes, with exception of, if there was
17 a word -- a limited word change issue that I
18 wrote on the actual draft, yes.
19 Q. With respect to separate notes --
20 A. Yes.
21 Q. -- they are all here as Exhibit 1?
22 A. Yes.
23 MS. CECIL: Let's go off the record.
24 MR. SHORE: Sure.
25 (Off-the-record conference.)

1 BY MR. SHORE:
2 Q. Ms. Stevens, just for clarification
3 and so we are all clear of what's contained in
4 Exhibit 1, your notes, those are all any
5 internal notes -- when I say internal notes,
6 notes regarding internal meetings you had with
7 AT&T folks, except when an AT&T lawyer was
8 present, and also includes notes concerning any
9 and all negotiation meetings that AT&T had with
10 BellSouth, whether or not counsel was present.
11 Did I get that right?
12 A. That I participated in, yes.
13 Q. Okay, thank you.
14 Now, would you say that the
15 definition of Local Traffic was a key issue in
16 negotiations between AT&T and BellSouth in the
17 summer of 2001, as pertained to their Second
18 Interconnection Agreement?
19 MS. CECIL: I'm going to object
20 unless you can be more specific about summer,
21 because the dates in this proceeding are very
22 important. Can you give her --
23 BY MR. SHORE:
24 Q. In 2001, after you joined the team,
25 was the definition of Local Traffic as it

1 pertained to the parties' Second Interconnection
2 Agreement a key issue?
3 A. When I joined the team?
4 Q. At any time after you joined the
5 team through the time the parties signed the
6 agreement in July of 2001, was the definition of
7 Local Traffic a key issue?
8 A. No.
9 Q. Okay. It was never a key issue or
10 did it become -- was it a key issue at some
11 point in time?
12 A. It wasn't a key issue during my
13 tenure in February of '01.
14 Q. And did it ever become a key issue
15 between February '01 and July 2001?
16 A. No.
17 Q. How do you define key issue, then,
18 as you used it earlier?
19 A. A key issue would have been
20 outstanding contract issues that the parties had
21 not resolved.
22 Q. Is it your testimony that the
23 parties had resolved the definition of Local
24 Traffic prior to February 2001?
25 A. Yes.

1 Q. Okay. And what is that
2 understanding based on?
3 A. The Mississippi Interconnection
4 Agreement.
5 Q. You are going to have to explain
6 that to me, Ms. Stevens.
7 Had they resolved it as it pertained
8 to the North Carolina Agreement?
9 A. I'm sorry, repeat.
10 Q. With respect to the North Carolina
11 Interconnection Agreement, is it your
12 understanding that the parties had already
13 resolved the definition of Local Traffic before
14 February 2001?
15 A. Yes.
16 Q. Okay. And what is that
17 understanding based on?
18 A. Because of the language that's in
19 the Mississippi Agreement, where Local Traffic
20 was defined as anything within the LATA.
21 Q. How does that language in Mississippi
22 resolve it for North Carolina, in your mind?
23 I'm really not following you.
24 A. It required no further definition.
25 It had already been defined in Mississippi, and

1 language from one contract carried over to
2 another.
3 Q. Is it your understanding that the
4 language that had -- in the Mississippi
5 Agreement was going to be the language that was
6 going to be in the North Carolina Agreement, as
7 it pertains to the definition of Local Traffic?
8 A. It was not discussed that it would
9 not be.
10 Q. Was it your understanding that it
11 would be?
12 A. It was not an open issue that the
13 parties were discussing in North Carolina.
14 Q. Was it your understanding that the
15 definition of Local Traffic in the Mississippi
16 Agreement would be the definition that was going
17 to be in the North Carolina Agreement?
18 A. I think I've already answered that
19 twice, but yes.
20 Q. Now you've answered it. So even I
21 can understand it. Yes or no helps me, thanks.
22 And what was that understanding based
23 on? Did someone tell you that?
24 A. As I said earlier, it was not an
25 issue that the parties were discussing. The

1 intent of our meetings was to discuss open
2 issues. It was not an open issue.
3 Q. Okay. Do you have any recollection
4 at some point of BellSouth proposing a
5 definition of Local Traffic to AT&T after you
6 joined the team in 2001?
7 A. Not before the North Carolina
8 Agreement was signed, no.
9 Q. So just so -- maybe to wrap this
10 up. Maybe this will be my last question on
11 this, but I'm not promising. I may have asked
12 you this.
13 At no time then before the North
14 Carolina Agreement was signed did you feel that
15 the definition of Local Traffic was a key issue,
16 is that right?
17 A. Let me make sure I heard it
18 correctly. Could you repeat it?
19 Q. At no time before the North Carolina
20 Second Agreement was signed from the time you
21 joined the team to that point, you didn't
22 believe that the definition of Local Traffic was
23 a key issue?
24 A. That's correct.
25 Q. I want to maybe just establish for

1 the record, and maybe I'll learn something in
2 the process as well, how the Interconnection
3 Agreement negotiations -- what the procedure is.
4 And am I correct that the parties sort of start
5 off, each start off with contract language, and
6 they exchange drafts and redlines reflecting new
7 proposals and where they agree and disagree, and
8 sort of have this document continue to be
9 exchanged between the parties as the negotiations
10 occur?
11 A. That's correct, that describes the
12 process.
13 Q. Are you the person at AT&T that's
14 responsible for keeping the current version?
15 A. Yes.
16 Q. And when I say, the current version,
17 I mean sort of the last version to go back and
18 forth between the parties. Does that fall
19 within your administrative responsibilities?
20 A. Yes.
21 Q. Now, when you take notes when you
22 attend interconnection negotiations with
23 BellSouth, do you review those notes after the
24 meeting with Mr. Peacock or anyone else?
25 A. My process usually was to review my

1 notes and update the issues matrix that was
2 created, that tracked open and closed issues.
3 Q. You ever go over your notes with Mr.
4 Peacock and say, hey, did I get everything in
5 there or does this look accurate, or did he
6 review your notes in anyway?
7 A. During the negotiation session?
8 Q. During the negotiations.
9 A. No.
10 Q. And as the negotiations were
11 continuing? I mean, before this case, did he
12 review your notes?
13 A. No.
14 Q. Do you have any experience in
15 Network Architecture?
16 A. No.
17 Q. Did you participate in any of the
18 substantive discussions at the negotiation
19 sessions with BellSouth over the Second
20 Interconnection Agreement?
21 A. I attended.
22 Q. Right, I got that. I'm trying to
23 find out if you were -- you talked while you
24 were there?
25 A. My role was not to understand the

1 technical issues of Network Architecture and
2 Point of Interconnection. I was serving more in
3 an administrative capacity.
4 Q. So you didn't participate in the
5 discussions?
6 A. I may have said, can you say again
7 what you just said.
8 Q. Okay. But in terms of -- this
9 isn't a trick question, Ms. Stevens, I promise.
10 In terms of substantive negotiations
11 that went on, you weren't involved in those, is
12 that fair to say?
13 A. No, that's fair to say.
14 Q. Now, in your testimony on the bottom
15 of page 3, I think it spills over to page 4,
16 when you are describing your job
17 responsibilities, you say one of your
18 responsibilities was to, "assist with arbitration
19 petitions filed with state commissions."
20 Do you see that?
21 A. Yes.
22 Q. What did you do -- how did you
23 assist with arbitration petitions?
24 A. Again, verified dates that
25 conversations took place, issues that were

1 discussed at those sessions.
2 Q. I take it detail is an important
3 part of your job responsibility?
4 A. Yes.
5 Q. Now, on page 4 lines 2 and 3 after
6 the comma, you say that you, "assisted with the
7 preparation of AT&T's arbitration petition filed
8 with the Commission." Do you see that?
9 A. Yes.
10 Q. Okay. What are you referring to
11 there? Which arbitration petition -- maybe start
12 out with, which commission?
13 A. I need a minute.
14 MS. CECIL: Okay, we'll take a
15 break.
16 MR. SHORE: Well, let me just get
17 an answer to my question on the record.
18 THE WITNESS: I don't have an
19 answer.
20 MS. CECIL: She wants to take a
21 break.
22 MR. SHORE: Hang on a second. She
23 is not allowed to confer with you before giving
24 me an answer. If it involves attorney/client
25 privilege, that's one thing. But you can't talk

about your answers with your counsel before you give them. This is her deposition.

MS. CECIL: What do you want to do? You want to go out to the restroom?

THE WITNESS: Yeah.

MS. CECIL: Okay. Go ahead. I'll sit here.

(A recess transpired.)

THE WITNESS: Could you restate the question?

MR. SHORE: Yeah, I'll just let the court reporter.

(The Court Reporter read back the requested question.)

THE WITNESS: I'm sorry, you asked about lines 2 and 3, correct?

BY MR. SHORE:

Q. Yes, on page 4 where you say, "In this respect, I assisted with the preparation of AT&T's arbitration petition filed with the Commission?

A. With the North Carolina Commission, the complaint petition -- I don't know the legal name of it.

Q. Do you mean the complaint that

1 initiated this particular docket?
2 A. Yes.
3 Q. When you stepped out a few minutes
4 ago, did you talk to anybody about that
5 question?
6 A. No.
7 Q. And what did you do in preparation
8 -- in assisting with the preparation of AT&T's
9 complaint in this case?
10 MS. CECIL: Wait. I'd like to
11 clarify. Let's go off the record.
12 MR. SHORE: Sure.
13 (Off-the-record conference.)
14 MR. SHORE: Let's back up.
15 BY MR. SHORE:
16 Q. Is it your testimony that you
17 assisted with the preparation of the complaint
18 in this proceeding that we're in that relates to
19 the definition of Local Traffic and the
20 exclusion, or something else that you assisted
21 with?
22 A. Ask me again. I think I am
23 confused about the question.
24 Q. Okay. Did you assist in the
25 preparation of AT&T's complaint in this case

that initiated the case where you filed your testimony?

A. Yes.

Q. What did you do?

A. It's the same answer that I gave before, I confirmed dates of conversations, content of conversations.

Q. And do you recall specifically what you did in assisting in preparing that complaint or petition?

A. I don't. I provided dates --

Q. Who did you provide those to?

A. -- of conversations and -- Jeff King, probably.

Q. Okay. And when was that?

A. I don't know.

Q. Was it 2001, 2002?

A. If I recollect, the petition was filed in August of 2002, maybe. So it was probably 2002.

Q. I think you covered this already, Ms. Stevens, so I apologize. But when I make my notes getting ready for these things, sometimes the questions come up out of order. And I don't remember when I get to that point

1 in my notes. So I'm not trying to be
2 repetitive or confuse the issue, but let me ask
3 this again to make sure I asked it.
4 Did you attend every negotiation
5 meeting and conference call between BellSouth and
6 AT&T from February 2001 when you joined the team
7 through July 19, 2001, when the agreement was
8 signed?
9 A. No.
10 Q. Would there be a particular reason
11 that there were meetings that you didn't attend,
12 other than maybe you had a day off?
13 A. No.
14 Q. That --
15 A. It was because of a day off or I
16 had to pick my kids up and the meeting ran
17 until 7:00 or 8:00.
18 Q. Okay. I want to ask you about some
19 testimony that's on page 5 of your testimony,
20 beginning on line 11, that question there.
21 And it says at page 5 lines 110
22 through 14 -- I'm not sure it's supposed to say
23 110. It's probably supposed to say 10, of Ms.
24 Shiroishi's testimony, Ms. Shiroishi states, "In
25 the course of these discussions, the parties

1 discussed the fact that this reference, except
2 for those calls that are originated or
3 terminated through switched access arrangements,
4 as established by the State Commission or FCC,
5 was to the switched access arrangements that are
6 offered for purchase through each party's
7 switched access tariffs, which are approved by
8 the State Commission for intrastate switched
9 access, or the FCC for interstate switched
10 access.
11 Do you ever remember being in a
12 meeting or on a conference call when Ms.
13 Shiroishi or anyone else from BellSouth made
14 such statements?"
15 Do you see that?
16 A. Yes, I see that.
17 Q. And your answer over on the next
18 page is that you, "Don't remember Ms. Shiroishi
19 or anyone else from BellSouth making such a
20 statement before the parties signed the
21 Interconnection Agreement," correct?
22 A. Correct.
23 Q. Is it your sworn testimony that Ms.
24 Shiroishi never made such a statement in any
25 meeting you attended, or just that you don't

1 recall hearing her make such a statement?
2 A. My notes do not reflect that she
3 made such a statement.
4 Q. Now, you say in that same answer
5 that you remember Ms. Shiroishi making a
6 statement to that effect after the
7 Interconnection Agreement was signed, and your
8 notes reflect that that was on November 16,
9 2001?
10 A. Correct.
11 Q. November 16, 2001, was after AT&T
12 let BellSouth know that it disagreed with
13 BellSouth regarding how the Local Traffic
14 exclusion was to be interpreted, right?
15 A. I believe it was along that same
16 time frame that we realized there was a
17 disconnect.
18 Q. Is your recollection of the statement
19 -- do you have an independent recollection of
20 Ms. Shiroishi making that statement in November
21 of 2001, or is your recollections based on just
22 seeing that reference in your notes?
23 A. Seeing the reference in my notes.
24 Q. Now, for meetings, negotiation
25 meetings between BellSouth and AT&T or conference

1 calls that you didn't attend, for whatever
2 reason, was there another person at AT&T whose
3 job it was to take notes at those meetings?
4 A. I'm assuming whoever conducted the
5 meeting on behalf of AT&T, or conference call.
6 For instance, if it was Bill and Beth having a
7 conversation.
8 Q. Do you know whether or not anyone
9 took notes in your absence?
10 A. No, I do not.
11 Q. Mr. Peacock was AT&T's lead
12 negotiator with BellSouth?
13 A. Correct.
14 Q. Was it Mr. Peacock's practice to
15 take notes during the meetings?
16 A. During the meetings that I was in
17 attendance?
18 Q. Yes, ma'am.
19 A. No.
20 Q. Did you ever hear Ms. Shiroishi or
21 anyone else at BellSouth say that BellSouth
22 wanted the definition of Local Traffic and
23 corresponding exclusion that made its way into
24 the agreement -- you are familiar with that
25 language, I take it, in Section 5.3.1.1?

1 MS. CECIL: Object to that. What
2 language?
3 BY MR. SHORE:
4 Q. Are you familiar with the definition
5 of Local Traffic that's in the party's Second
6 Interconnection Agreement?
7 A. In North Carolina?
8 Q. Yes, ma'am.
9 A. Yes, I know what it says.
10 Q. And that's the -- okay.
11 Did you ever hear Ms. Shiroishi or
12 anyone else at BellSouth during your contract
13 negotiations before the Second Interconnection
14 Agreement was signed say that BellSouth wanted
15 that definition of Local Traffic to prevent AT&T
16 or another CLEC from claiming that ISP traffic
17 and voice over Internet protocol calls
18 constituted Local Traffic for purposes of local
19 recip comp payments?
20 A. I'm sorry, you are going to have to
21 say that back again. I was kind of losing you
22 there.
23 MR. SHORE: Could you help me out?
24 Maybe I lost myself. I tried to write that
25 question down.

1 MS. CECIL: -- And if you still don't
2 understand the question, say you don't understand
3 the question.
4 MR. SHORE: She didn't say she
5 didn't understand.
6 (The Court Reporter read back the
7 requested question.)
8 THE WITNESS: I think what I'm
9 confused about is that definition.
10 BY MR. SHORE:
11 Q. The definition of Local Traffic
12 that's in the parties' Second Interconnection
13 Agreement as signed?
14 A. In North Carolina?
15 Q. Yes, ma'am.
16 A. And the question was, do I recall a
17 conversation before the North Carolina Agreement
18 was signed? The answer is no.
19 MS. CECIL: It might be easier if
20 you show her the language that you are asking
21 about. We appear to have some confusion here.
22 MR. SHORE: Okay. I didn't think
23 she was confused, but let's see.
24 BY MR. SHORE:
25 Q. When I refer to the definition of

1 Local Traffic in the parties' Second
2 Interconnection Agreement, Ms. Stevens, I have
3 been referring to the language that says --
4 MS. CECIL: Wait one second. Which
5 version of the contract?
6 THE WITNESS: And this is in the
7 signed agreement, correct?
8 BY MR. SHORE:
9 Q. Yes, ma'am. To the language that
10 says, "The parties agree to apply a LATA wide
11 local concept to this Attachment 3, meaning the
12 traffic that has traditionally been treated as
13 intraLATA toll traffic will now be treated as
14 local for intercarrier compensation purposes,
15 except those calls that are originated or
16 terminated through switched access arrangements
17 as established by the State Commission or FCC."
18 Is that which I have been referring
19 to as the Local Traffic definition that you are
20 wear of, is that what your understanding was
21 during our prior conversations today as the
22 Local Traffic definition in the Second
23 Interconnection Agreement?
24 A. Yes.
25 MS. CECIL: Just for the record,

1 were you referring to Section 5.3.1 in Exhibit 1
2 to the second amendment to the Second
3 Interconnection Agreement?
4 MR. SHORE: No, I was referring to
5 Section 5.3.1 of Attachment 3 of the agreement,
6 the original agreement. Now, that language
7 happens to be the same in the amendment, but I
8 was just reading that as you cited it in your
9 complaint.
10 MS. CECIL: Okay.
11 BY MR. SHORE:
12 Q. Has there been any misunderstanding
13 when I referred to the definition of Local
14 Traffic in the Second Interconnection Agreement
15 that you have been understanding it any
16 differently than I just read it and it appears
17 in Section 5.3.1 of the agreement?
18 A. No, as long as you clarify that it's
19 in the North Carolina Second Agreement.
20 Q. Okay.
21 A. Uh-huh.
22 Q. Did you ever hear anyone at AT&T,
23 Mr. Peacock, Mr. King, anyone, before the
24 agreement was signed, the second agreement on
25 July 19, 2001, state any reason that BellSouth

1 wanted the definition of Local Traffic that you
2 now have there in front of you in the
3 agreement?
4 A. I know ISP and voice over IP had
5 been discussed, there were issues.
6 Q. And my question was, though, did you
7 ever hear anyone at AT&T, before AT&T signed the
8 Second Interconnection Agreement, state that what
9 their understanding was as to why BellSouth
10 wanted that definition of Local Traffic? That
11 would be before I think it's July 19, 2001?
12 A. Just what my notes reflected in
13 meetings that we had.
14 Q. You don't have any independent
15 recollection of -- outside of what would be in
16 your notes?
17 A. No.
18 Q. The Interconnection Agreement
19 negotiation meetings that you attended do you
20 ever recall -- you know Beth Shiroishi from
21 BellSouth?
22 A. Yes.
23 Q. Do you ever recall Ms. Shiroishi
24 drawing diagrams up on a white board?
25 A. Did you say, do I recall that before

1 the Second Interconnection Agreement was filed?
2 Q. Yes, ma'am, during the negotiations
3 leading up to that.
4 A. My notes reflect that there were
5 some diagrams drawn on June the 6th, I believe.
6 Q. Okay. Let me just back up.
7 Apart from your notes, do you have
8 any independent memory of Ms. Shiroishi ever
9 drawing diagrams on a white board during any
10 negotiation meeting?
11 A. During any negotiation meeting?
12 Q. Yes, ma'am?
13 A. Before the agreement was signed?
14 Q. Yes, ma'am.
15 A. No.
16 Q. Now, you say that your notes reflect
17 -- you talked about this in your testimony
18 somewhere, on page 7, I guess it is. You
19 refer halfway through the page there to your
20 notes for a meeting on June 6th says -- your
21 notes state -- you purport to be quoting from
22 your notes there, right, starting on page 15; is
23 that right?
24 A. Starting on page 15?
25 Q. Line 15 on page 7?

1 A. Oh, sorry.
2 Q. Where you have the local channel,
3 it's in quotes?
4 A. Yes.
5 Q. That quotation is from your notes, I
6 take it?
7 A. Yes.
8 Q. And you say, "Local channel and
9 dedicated transport definition. Failed to get
10 with Dave Talbot to discuss BST explanation.
11 Sam drew up BST diagrams. Close quote.
12 Do you see that?
13 A. Yes.
14 Q. Okay. Sam, is Sam --
15 A. Benenati.
16 Q. Thank you.
17 MR. SHORE: Off the record.
18 (Off-the-record conference.)
19 BY MR. SHORE:
20 Q. Ms. Stevens, when you say, "Sam drew
21 up BST diagrams," what does that mean?
22 A. Related to local channel and
23 dedicated transport.
24 Q. Where did Sam draw those?
25 A. I don't think I'm implying that he

1 actually drew them. I think what I'm saying is
2 that he copied the diagrams that were up on the
3 white board.
4 Q. He copied those on some paper?
5 A. I didn't, so I'm assuming that, yes.
6 That's what my notes say that he did.
7 Q. Do you have those?
8 A. No, I don't.
9 Q. Do you recall -- it doesn't say in
10 your notes, does it, that Ms. Shiroishi drew the
11 diagrams?
12 A. I'd have to look at my notes.
13 Q. Okay. Do you have them there in
14 front of you?
15 A. Yes.
16 Q. You are looking in Deposition Exhibit
17 1. Let the record reflect that.
18 A. Uh-huh.
19 MS. CECIL: For the record, why
20 don't we indicate what page in your exhibit she
21 is looking at?
22 MR. SHORE: That's fine, if she
23 wants to say that. That's fine.
24 THE WITNESS: Page 216 and 217, and
25 218, actually. It would be those three pages.

1 My first reference would be
2 two-thirds of the way down the page 1.9, leave
3 open --
4 BY MR. SHORE:
5 Q. Which page?
6 A. I'm sorry, page 216.
7 Q. Okay.
8 A. It says, "Leave open, AT&T will
9 clarify BellSouth drawing of local channel
10 application with Dave Talbot."
11 Q. Okay. Do you know who it is from
12 BellSouth that made that drawing?
13 A. It would have been Beth or Ed.
14 Q. You don't remember?
15 A. No.
16 Q. Okay. Any other references in your
17 notes from that meeting on June 6th to anyone
18 from BellSouth drawing diagrams?
19 A. On page 217 about halfway, I'm
20 indicating a section reference at the time we
21 were negotiating 3.23. And I say, "Resolve with
22 diagrams."
23 Q. You know what that's a reference to?
24 A. I do not. It would be -- we'd have
25 to refer back to the redlines at that time.

1 Q. Let me ask you this question: Is
2 it your sworn testimony that Ms. Shiroishi
3 didn't draw any diagrams relating to switched
4 access arrangements and how those arrangements
5 would affect the definition of Local Traffic, or
6 just that your notes don't reflect her drawing
7 those diagrams?
8 MS. CECIL: During what time frame?
9 BY MR. SHORE:
10 Q. At this June 6th meeting?
11 MS. CECIL: Do you need to have the
12 question repeated?
13 THE WITNESS: No. My notes reflect
14 that the diagrams that were involved had to do
15 with the local channel and the dedicated
16 transport.
17 BY MR. SHORE:
18 Q. And my question is, would you swear
19 under oath that Ms. Shiroishi didn't draw any
20 diagrams relating to the Local Traffic definition
21 and exclusion regarding switched access
22 arrangements?
23 A. Yes, I stand by my notes.
24 Q. You don't have -- and would it be
25 your sworn testimony that Ms. Shiroishi never

1 drew any diagrams in any meeting with AT&T
2 regarding the Local Traffic definition and
3 switched access arrangements?
4 A. Prior to the contract being signed?
5 Q. Yes, ma'am.
6 A. Yes.
7 Q. And is it your testimony here today
8 that if Ms. Shiroishi had drawn such diagrams,
9 you would have reflected that in your notes?
10 A. Yes, a reference to it. I may not
11 have drawn the diagram, but yes.
12 Q. Okay. Did you attend -- do you
13 know whether or not you attended a negotiation
14 meeting with BellSouth on June 26, 2001?
15 A. Yes, I did.
16 Q. Did you attend a conference call
17 meeting with BellSouth on July 17, 2001 -- or
18 excuse me, July 16, 2001?
19 A. Yes.
20 Q. Do you know how long that conference
21 call lasted?
22 A. I do not have that noted.
23 Q. Do you remember?
24 A. My notes -- just from looking at my
25 notes.

1 Q. And how about, did you attend a
2 conference call on July 17, 2001, with
3 BellSouth?
4 A. I have a note on here that says,
5 "On July 17th Beth will redline us back. If
6 AT&T didn't touch it, she didn't."
7 Q. But do you recall or do your notes
8 help you refresh your recollection as to whether
9 or not you attended a conference call with
10 BellSouth on July 17th of 2001?
11 A. My notes do not reflect that I
12 attended that conference.
13 Q. Have you talked to Mr. Peacock about
14 this case, this complaint proceeding in North
15 Carolina?
16 A. We've discussed the fact that we
17 were both filing testimony.
18 Q. When did that conversation take
19 place?
20 A. Maybe within the last two weeks.
21 Q. Did you have any conversations with
22 him before the last two weeks about this case?
23 A. Not that I recall.
24 Q. Was Mr. Peacock the person that came
25 to you and told you that he wanted you to file

1 testimony in this case?
2 A. Yes.
3 Q. What did he tell you at that time?
4 A. I'm sorry, what did he tell me at
5 that time?
6 Q. Yes, ma'am.
7 A. That I was going to -- that I
8 needed to be a part of this complaint or
9 testimony.
10 Q. Did he tell you why?
11 A. Did he tell me why? Yes.
12 Q. What did he tell you?
13 A. To confirm dates, and conversations
14 that took place on dates, because I was the
15 official note taker.
16 Q. Anything else?
17 A. No.
18 Q. Okay. Did you write down anywhere
19 in your meeting notes of the interconnection
20 negotiations with BellSouth how long the meeting
21 lasted or what time it started and what time it
22 ended? Was that something that you typically
23 wrote down?
24 A. No.
25 MR. SHORE: Off the record.

1 (A recess transpired.)
2 BY MR. SHORE:
3 Q. Ms. Stevens, this morning before your
4 deposition your counsel produced documents to us
5 consisting of e-mails and redline agreements and
6 some other things that we are going to mark
7 collectively as Stevens Deposition Exhibit No. 2.
8 And I want to ask you about some of those
9 documents.
10 (WHEREUPON, Exhibit 2 was marked for
11 identification.)
12 BY MR. SHORE:
13 Q. Let me show you, Ms. Stevens, a
14 document that looks like it's an e-mail from
15 Michael Willis at BellSouth to Mr. Peacock,
16 dated May 22, 2001.
17 Have you seen that before?
18 A. I wasn't copied on it, so I don't
19 recall.
20 Q. To the extent -- okay. Strike that.
21 Let me show you a document that's
22 entitled Attachment 3, and on the cover page
23 there is a date written 5/22/01. Is that your
24 handwriting?
25 A. Yes.

1 Q. And if you look in this document,
2 Attachment 3, that you have written 5/22/01 on
3 it, at various points can we agree in this
4 document that there are notes in the margin?
5 You see those?
6 A. Yes, there are notes.
7 Q. Okay. Is that your handwriting?
8 A. Some of it is my handwriting.
9 Q. Okay. Can you tell me, for example,
10 which is not your handwriting in that document?
11 Just flip through it.
12 A. On page 3, 1.1.1 I didn't write the
13 word AT&T.
14 Q. Do you know who did?
15 A. I think it's Bill's writing, Bill
16 Peacock.
17 Q. What about these OKs in the margin?
18 A. Those are my writing.
19 Q. Would you just flip through and tell
20 me if there is anything that you see that looks
21 like it's someone's writing, other than your
22 own?
23 A. This is writing other than my own.
24 Q. On page 4, it says, "This is the
25 earlier" -- something or another?

1 A. "Clarification, eliminate the need for
2 this language."
3 Q. Anything else that isn't yours?
4 A. That is not.
5 Q. "Delete," down there at bottom of
6 page 4?
7 A. Uh-huh.
8 Q. Okay.
9 A. And this, "Or causing to be
10 provided."
11 Q. Okay. Let the record reflect that
12 is right above the, "delete," still on page 4.
13 Okay. If you just continue to flip
14 through it.
15 A. (Indicating), these notes are not
16 mine.
17 Q. On page 5 up at the top, "or
18 leased," and then a third or so of the way
19 down?
20 A. "At our discretion."
21 Q. "At our discretion," isn't yours?
22 A. That's correct. And that's not
23 mine.
24 Q. In the left margin, "Only traffic
25 covered in this agreement." That's not yours?

1 A. No.
2 Q. Let the record reflect that I'm not
3 going to have you look through the entire thing.
4 A. Okay.
5 Q. I got a pretty good idea now what
6 each person's handwriting looks like, but...
7 Are all these "OKs" that I see in
8 the agreement, is that your writing --
9 A. Yes.
10 Q. -- in various places?
11 When you write "OK" next to a
12 contract provision, what does that indicate?
13 A. In these situations, I believe it
14 meant that both parties were okay with the
15 language.
16 Q. They had reached agreement on the
17 language?
18 A. Or it hadn't been discussed during
19 that session, previously agreed to.
20 Q. Okay. On page 20 of Attachment 3,
21 is there any handwriting on that page that isn't
22 yours?
23 A. No.
24 Q. And you have written "OK" up there
25 next to the 5.3.1. Is that your handwriting?

1 A. Yes.
2 Q. Okay. What does that "OK" indicate?
3 A. Possibly just the heading.
4 Q. Do you know?
5 A. I'm assuming just the heading, since
6 I have different notes in here.
7 Q. Okay.
8 A. I think headings were an issue then.
9 Q. I'm sure between the parties --
10 MS. CECIL: If we can go off the
11 record.
12 (Off-the-record conference.)
13 MR. SHORE: Okay. We'll make that
14 one Exhibit 3.
15 (WHEREUPON, Exhibit-3 was marked for
16 identification.) (that was the previous exhibit)
17 MR. SHORE: All right. We'll mark
18 as Exhibit 4 a document that's another version
19 of Attachment 3, that has typewritten down at
20 the bottom, 6/12/01.
21 (WHEREUPON, Exhibit-4 was marked for
22 identification.)
23 BY MR. SHORE:
24 Q. Let me show you that one, Ms.
25 Stevens. I direct your attention to page 26 of

1 that. Are those OKs there in the margin, is
2 that your handwriting?
3 A. It is my handwriting.
4 Q. What are those OKs meant to indicate
5 there next to 5.4.1, 5.4.2, 5.4.3?
6 A. Language that was not discussed at
7 the time, and that the parties didn't have any
8 questions about at the time.
9 MR. SHORE: Thanks, Ms. Stevens.
10 **EXAMINATION**
11 **BY-MS.CECIL:**
12 Q. Ms. Stevens, this is Loretta Cecil,
13 and I have a few questions to ask you about
14 some of the questions that Mr. Shore asked you.
15 He asked you about Exhibits 3 and 4,
16 which we just had identified. And he asked you
17 about handwriting on those exhibits. And at the
18 bottom of those exhibits there are dates, were
19 there not?
20 A. Yes.
21 Q. For example, on Exhibit 3, the date
22 at the bottom indicates that it was --
23 MR. SHORE: You've got 4, I think,
24 Loretta.
25 MS. CECIL: I'm sorry. Thanks.

1 BY MS. CECIL:

2 Q. On the bottom of Exhibit 3, it look
3 like marked out, "NC revised 4/18/00."
4 That designates May 18, 2000, is
5 that correct?
6 A. Yes -- or April, I'm sorry.
7 Q. I'm sorry. And then there is a
8 mark through, and then there is a notation
9 5/22/01. Do you see that?
10 A. Yes.
11 Q. And was it your testimony that you
12 would have written 5/22/01 on that document?
13 A. Yes.
14 Q. Okay. And then with respect to
15 Exhibit No. 4, at the bottom of the page, the
16 first page of that exhibit, there is a notation,
17 "NC revised 4/18/00." And that appears to be
18 struck through, is that correct?
19 A. Yes.
20 Q. And beside it, it is typed in,
21 "6/12/01" underlined. You see that?
22 A. Yes.
23 Q. Who would have placed in there
24 6/12/01, underlined, if you know?
25 A. I believe it was Beth.

1 Q. Okay. During the course of the
2 negotiations where you were involved and you
3 were taking notes, were there discussions between
4 AT&T and BellSouth about document control and
5 making sure that the headers on the various
6 versions of the contract was accurate?
7 A. BellSouth had document control.
8 Q. Was there a problem with the
9 document always reflecting the correct version on
10 the bottom of the document?
11 A. Yes. And, for example, only the
12 first page of this is marked with the change,
13 so I had to manually go in and write in the
14 correct date on the other pages so we were
15 clear.
16 Q. So if someone was looking at all of
17 the different redline versions of the contract
18 and they were looking at a date at the bottom
19 of the contract, is there any absolute guarantee
20 that that date reflects the date of that
21 language?
22 A. No.
23 Q. Do you remember any discussions with
24 Ms. Shiroishi about doing a better job of
25 keeping the dates at the bottom consistent with

1 the language in the contract?
2 A. I don't remember a specific
3 discussion. I think we may have in jest
4 suggested that it needed to be done.
5 Q. But that was an issue in document
6 control, wasn't it?
7 A. Yes.
8 Q. Okay. Now, Mr. Shore asked you
9 about a negotiations meeting between AT&T and
10 BellSouth on July 16, 2001. Do you remember
11 that?
12 A. Yes.
13 Q. Okay. And that was the day before
14 the parties supposedly reached agreement on July
15 17th on final terms for the contract. You
16 understand that?
17 A. Yes.
18 Q. Did you attend that negotiation --
19 MR. SHORE: Let me just -- you are
20 talking fast, go right ahead. I just wanted to
21 try to lodge an objection to the form before
22 she answered the last question. I just want to
23 reflect that.
24 MS. CECIL: Okay.
25 //

1 BY MS. CECIL:
2 Q. Did you attend that negotiation
3 session on July 16, 2001?
4 A. Yes.
5 Q. Did you attend all of the meeting?
6 A. Yes.
7 Q. Now, the meeting that took place
8 between AT&T and BellSouth on July 17th, you say
9 you did not attend that meeting or you did?
10 A. I don't know. My notes reflect
11 something on July 17th, but I don't know what.
12 Q. Okay. All right.
13 A. I did not attend the conference
14 call, I know that.
15 Q. Okay. I want to ask you some
16 questions about your testimony. Mr. Shore asked
17 you questions about your assistance with the
18 arbitration petition.
19 If you look at the bottom of page 3
20 of your testimony.
21 A. Uh-huh.
22 Q. You say at line 25, "And finally, I
23 assisted with the preparation of arbitration
24 petitions filed with the State Commissions. In
25 this respect, I assisted with the preparation of

1 AT&T arbitration petition filed with this
2 Commission."
3 Do you see that?
4 A. Yes.
5 Q. Okay. Now, I was confused when Mr.
6 Shore asked you some questions about that.
7 Can you tell me exactly what you did
8 in any preparation of AT&T's arbitration petition
9 filed with this Commission, as you state there
10 on page 4, lines 2 and 3 of your testimony?
11 A. The petition in North Carolina for
12 arbitration was filed prior to me joining the
13 team. But as a continuing effort of the
14 petition arbitration, I provided support of
15 conversations that took place, documenting
16 conversations in negotiation sessions, et cetera.
17 Q. And I think you told Mr. Shore that
18 you also assisted with the complaint that AT&T
19 has filed in this proceeding as well?
20 A. Yes.
21 MS. CECIL: No further questions.
22 **EXAMINATION**
23 **BY-MR.SHORE:**
24 Q. Ms. Stevens, Deposition Exhibit 3
25 where we talked earlier that you crossed out the

1 date and wrote 5/22/01 down there, what's that
2 5/22/01 supposed to indicate?
3 A. That would have been the date that
4 the redline was made.
5 Q. That's sort of the redline agreement
6 like we talked about earlier going back and
7 forth as of May 22, 2001?
8 A. Yes.
9 MR. SHORE: Thanks.
10 (WHEREUPON, the deposition was
11 concluded.)
12
13
14
15
16
17
18
19
20
21
22
23
24
25

1 STATE OF GEORGIA:
2 COUNTY OF FULTON:
3 I hereby certify that the foregoing
4 transcript was reported, as stated in the
5 caption, and the questions and answers
6 thereto were reduced to typewriting under my
7 direction; that the foregoing pages represent
8 a true, complete, and correct transcript of
9 the evidence given upon said hearing, and I
10 further certify that I am not of kin or
11 counsel to the parties in the case; am not
12 in the employ of counsel for any of said
13 parties; nor am I in anywise interested in
14 the result of said case.
15
16
17
18
19
20
21
22
23
24
25

1 Disclosure Pursuant to Article
2 8(B) of the Rules and Regulations of the
3 Board of Court Reporting of the Judicial
4 Council of Georgia, I make the following
5 disclosure:
6 I am a Georgia Certified Court
7 Reporter, here as a representative of
8 Alexander Gallo & Associates, Inc., to report
9 the foregoing matter. Alexander Gallo &
10 Associates, Inc., is not taking this
11 deposition under any contract that is
12 prohibited by O.C.G.A. 5-14-37 (a) and (b):
13 Alexander Gallo & Associates,
14 Inc., will be charging its usual and
15 customary rates for this transcript.
16
17
18 /s/ Phyllis A. Lee
19 Phyllis A. Lee, CCR-B-2321
20
21
22
23
24
25

1 CAPTION

2 The Deposition of **Roberta Stevens**,
3 taken in the matter, on the date, and at the
4 time and place set out on the title page
5 hereof.
6 It was requested that the deposition
7 be taken by the reporter and that same be
8 reduced to typewritten form.
9 It was agreed by and between counsel
10 and the parties that the Deponent will read
11 and sign the transcript of said deposition.
12
13
14
15
16
17
18
19
20
21
22
23
24
25

1 CERTIFICATE

2 STATE OF_____:

3 COUNTY/CITY OF_____:

4 Before me, this day, personally

5 appeared, **Roberta Stevens**, who, being duly

6 sworn, states that the foregoing transcript

7 of his/her Deposition, taken in the matter,

8 on the date, and at the time and place set

9 out on the title page hereof, constitutes a

10 true and accurate transcript of said

11 deposition.

12 _____

13 **Roberta Stevens**

14

15 SUBSCRIBED and SWORN to before me this

16 _____ day of_____, 2003 in the

17 jurisdiction aforesaid.

18 _____ _____

19 My Commission Expires Notary Public

20

21

22

23

24

25

DEPOSITION ERRATA SHEET

RE: Alexander Gallo & Associates
File No. 3587
Case Caption: AT&T Communications, et al. vs. BellSouth Telecommunications, Inc.
Deponent: **Roberta Stevens**
Deposition Date: January 20, 2003

To the Reporter:
I have read the entire transcript of my Deposition taken in the captioned matter or the same has been read to me. I request that the following changes be entered upon the record for the reasons indicated. I have signed my name to the Errata Sheet and the appropriate Certificate and authorize you to attach both to the original transcript.

Page No. _____ Line No. _____ Change to: _____

_____

Reason for change: _____

Page No. _____ Line No. _____ Change to: _____

_____

Reason for change: _____

Page No. _____ Line No. _____ Change to: _____

_____

Reason for change: _____

Page No. _____ Line No. _____ Change to: _____

_____

Reason for change: _____

Page No. _____ Line No. _____ Change to: _____

_____

Reason for change: _____

Deposition of Roberta Stevens

Page No. _____ Line No. _____ Change to: _____

_____

Reason for change: _____

Page No. _____ Line No. _____ Change to: _____

_____

Reason for change: _____

Page No. _____ Line No. _____ Change to: _____

_____

Reason for change: _____

Page No. _____ Line No. _____ Change to: _____

_____

Reason for change: _____

Page No. _____ Line No. _____ Change to: _____

_____

Reason for change: _____

Page No. _____ Line No. _____ Change to: _____

_____

Reason for change: _____

SIGNATURE: _____ DATE: _____

Roberta Stevens

AMENDED CERTIFICATE

STATE OF GEORGIA:

COUNTY OF FULTON:

I hereby certify that in addition to the certification made on the Reporter's Certificate Pages, this Original Deposition has been sealed pending the witness' right to review said deposition within 30 days, which time has not elapsed.

Alexander Gallo & Associates, Inc.

A

about 4:4,21 5:2,22 5:23 6:24 8:20 10:1 11:5 17:15 23:20 32:1,16 33:4,23 35:18 40:9,21 44:17 47:19 50:1,13,22 52:8 53:17 57:8 57:13,15,17 59:4 59:24 60:9 61:16 61:17 62:6 63:6
above 54:12
absence 8:8 38:9
absolute 59:19
accepted 19:13
access 7:17,17 9:17 9:22 11:10,12,15 12:9,11,13,19 13:23 14:2,14 15:3,16 16:3,6,11 16:12,14,19,24 17:5 36:3,5,7,9,10 41:16 48:4,21 49:3
accurate 29:5 59:6 68:10
actual 22:18
actually 46:1,25
address 3:23 17:5
addressed 6:1
administrative 12:4 18:1 28:19 30:3
Affairs 9:20,24 10:6 11:13 14:1
affect 48:5
affected 17:12
aforesaid 68:17
after 14:12 15:2 23:24 24:4 27:5 28:23 31:5 37:6 37:11
again 13:19 30:6,24 33:22 35:3 39:21
ago 16:21 33:4
agree 28:7 41:10 53:3
agreed 55:19 67:9
agreement 17:25 19:1 22:13 23:18 24:2,6 25:4,8,11 25:19 26:5,6,16 26:17 27:8,14,20 28:3 29:20 35:7 36:21 37:7 38:24 39:6,14 40:13,17 41:2,7,23 42:3,5,6 42:14,17,19,24,24 43:3,8,18 44:1,13 54:25 55:8,16 60:14 63:5
agreements 9:1 52:5
ahead 21:7 32:6 60:20
al 69:5
Alexander 66:8,9 66:13 69:3
allowed 31:23
along 37:15
already 25:12,25 26:18 34:21
always 11:14,17 59:9
amendment 42:2,7
Andrew 2:12 3:9
andrew.shore@b... 2:18
ands 21:5
announced 17:8
another 26:2 38:2 39:16 53:25 56:18
answer 5:12 10:25 31:17,19,24 34:5 36:17 37:4 40:18
answered 26:18,20 60:22
answers 32:1 65:5
anybody 4:16 33:4
anybody's 16:12,14
anyone 4:13 7:3,4 7:10 19:4,7,8,15 28:24 36:13,19 38:8,21 39:12 42:22,23 43:7 47:17
anything 5:13 6:25 25:20 51:16 53:20 54:3
anyway 29:6
anywhere 51:18
anywise 65:13
Apart 44:7
apologize 34:22
appear 40:21
APPEARANCES 2:1
appeared 68:5
appears 42:16 58:17
application 47:10
apply 41:10
applying 14:8
appropriate 69:17
approved 36:7
April 58:6
arbitration 30:18 30:23 31:7,11 32:20 61:18,23 62:1,8,12,14
Architecture 29:15 30:1
arrangements 12:9 12:13 36:3,5 41:16 48:4,4,22 49:3
Article 66:1
asked 5:25 6:4 11:9 27:11 32:15 35:3 57:14,15,16 60:8 61:16 62:6
asking 40:20
assist 18:10 19:11 30:18,23 33:24
assistance 61:17
assisted 31:6 32:19 33:17,20 61:23,25 62:18
assisting 33:8 34:9
Associates 66:8,10 66:13 69:3
assume 15:20
assumed 16:22
assuming 15:14 17:4 38:4 46:5 56:5
Atlanta 1:14 2:7,16 17:9
attach 69:18
Attachment 41:11 42:5 52:22 53:2 55:20 56:19 64:5 64:6
attend 18:18 20:5 21:12 28:22 35:4 35:11 38:1 49:12 49:16 50:1 60:18 61:2,5,9,13
attendance 38:17
attended 29:21 36:25 43:19 49:13 50:9,12
attention 56:25
attorney 4:16
attorney/client 31:24
AT&T 1:2 2:2 6:15 7:18 8:21 9:5 10:13 11:6,17 14:8 15:2,12 16:7 17:7,9 18:15 23:7 23:7,9,16 27:5 28:13 35:6 37:11 37:25 38:2,5 39:15 42:22 43:7 43:7 47:8 49:1 50:6 53:13 59:4 60:9 61:8 62:1,18 69:5
AT&T's 4:17 8:16 8:17 9:17 11:10 11:11 31:7 32:20 33:8,25 38:11 62:8
August 34:19
authority 10:14 14:9
authorize 69:17
aware 15:4 17:7
a.m 1:12

B

b 12:22 66:12
back 5:6 14:21,22 28:17 32:13 33:14 39:21 40:6 44:6 47:25 50:5 63:6
backup 11:25 12:2
based 16:25 25:2,17 26:22 37:21
become 24:10,14
before 1:1 3:12 8:4 8:10 9:9,15 12:7 12:15 25:13 27:7 27:13,19 29:11 31:23 32:1 34:6 36:20 39:13 40:17 42:23 43:7,11,25 44:13 50:22 52:3 52:17 60:13,21 68:4,15
beginning 35:20
behalf 2:2,11 9:5 38:5
being 3:3 36:11 49:4 68:5
believe 8:19 9:8,25 20:7,9 27:22 37:15 44:5 55:13 58:25
Bell 8:25
BellSouth 1:7 2:11 2:13,21,22 3:10 6:17 12:8 13:24 15:3,12 16:11 18:14,15 20:6 22:14 23:10,16 27:4 28:23 29:19 35:5 36:13,19 37:12,13,25 38:12 38:21,21 39:12,14 42:25 43:9,21 47:9,12,18 49:14 49:17 50:3,10 51:20 52:15 59:4 59:7 60:10 61:8 69:6
BellSouth's 16:18
Benenati 45:15
beside 58:20
besides 4:16
Beth 2:21 38:6 43:20 47:13 50:5 58:25
better 59:24
between 14:4 23:16 24:15 28:9,18 35:5 37:25 56:9 59:3 60:9 61:8 67:9
Bill 4:18,19 38:6 53:15
Bill's 6:8 53:15
bit 10:22
board 43:24 44:9 46:3 66:3
book 21:22 22:1
boss 4:18 7:23 8:1
both 10:22 50:17 55:14 69:18
bottom 30:14 54:5 56:20 57:18,22 58:2,15 59:10,18 59:25 61:19
Bracy 2:22
break 31:15,21
bring 5:10
BST 45:10,11,21
business 3:23 9:18 11:10,12

buts 21:5
BY-MR.SHORE 3:6 62:23
BY-MS.CECIL 57:11

C

call 7:9 35:5 36:12 38:5 49:16,21 50:2,9 61:14
called 8:23 10:8
calls 15:12 18:19 22:14 36:2 38:1 39:17 41:15
came 7:20 8:5 9:9 9:15 50:24
capacity 30:3
caption 65:5 67:1 69:5
captioned 69:12
career 16:7
Carlyle 2:4
Carolina 1:1 4:5 25:8,10,22 26:6 26:13,17 27:7,14 27:19 32:22 39:7 40:14,17 42:19 50:15 62:11
Carolinas 1:4
carried 26:1
Cascade 3:24
case 29:11 33:9,25 34:1 50:14,22 51:1 65:11,14 69:5
causing 54:9
CCR-B-2321 1:16 66:19
Cecil 2:3 4:15 5:12 7:7,10 13:6,9,13 13:17 14:16 16:10 22:23 23:19 31:14 31:20 32:3,6 33:10 39:1 40:1 40:19 41:4,25 42:10 46:19 48:8 48:11 56:10 57:12 57:25 58:1 60:24 61:1 62:21
Certificate 68:1 69:17
Certified 66:6
certify 65:3,10
cetera 62:16
change 5:13,17 14:7 21:19 22:17 59:12 69:20,22,23,25 70:1,3,4,6,7,9,12 70:14,15,17,18,20 70:21,23,24 71:1 71:2,4
changes 69:14
channel 45:2,8,22 47:9 48:15
charging 66:14
Cincinnati 8:25
cited 5:3 42:8
claiming 39:16
clarification 23:2 54:1
clarify 33:11 42:18 47:9
clear 6:20 23:3 59:15
CLEC 39:16
client 8:25
Close 45:11
closed 29:2
collaborate 4:12
Collection 64:4
collectively 52:7
come 34:24
comma 31:6
commission 1:1 10:15,19,20 15:22 15:23 31:8,12 32:21,22 36:4,8 41:17 62:2,9 68:19
commissions 30:19 61:24
Communications 1:2,3 69:5
comp 39:19
companies 8:24 9:3
company 17:6
compensation 41:14
Complainants 1:5
complaint 32:23,25 33:9,17,25 34:9 42:9 50:14 51:8 62:18
complete 65:8
concept 41:11
concerning 23:8
concluded 63:11
conditions 15:15 16:24
conducted 38:4
confer 31:23
conference 18:19 22:13,25 33:13 35:5 36:12 37:25 38:5 45:18 49:16 49:20 50:2,9,12 56:12 61:13
confirm 51:13
confirmed 34:6
confuse 35:2
confused 15:6 33:23 40:9,23 62:5
confusion 40:21
conjunction 9:3
consider 18:16
considering 20:16
consist 19:16
consistent 59:25
consisting 52:5
constituted 39:18
constitutes 68:9
consumer 8:10,12 9:11
contact 10:16,17 11:5
contained 23:3
content 34:7
continue 28:8 54:13
continuing 29:11 62:13
contract 12:7 13:7 24:20 26:1 28:5 39:12 41:5 49:4 55:12 59:6,17,19 60:1,15 66:11
contractual 17:6
control 59:4,7 60:6
convenient 22:5
conversation 20:3 38:7 40:17 50:18
conversations 4:14 6:8 30:25 34:6,7 34:13 41:21 50:21 51:13 62:15,16
coordinating 11:14
copied 46:2,4 52:18
copy 4:7
correct 7:15 10:1 11:18 21:15 27:24 28:4,11 32:16 36:21,22 37:10 38:13 41:7 54:22 58:5,18 59:9,14 65:8
corrections 5:7
correctly 14:15 17:3 27:18
corresponding 38:23
Council 66:4
counsel 2:1 23:10 32:1 52:4 65:11 65:12 67:9
COUNTY 65:2
COUNTY/CITY 68:3
course 15:10 35:25 59:1
court 10:25 14:22 32:12,13 40:6 66:3,6
cover 52:22
covered 34:21 54:25
created 29:2
creating 12:2
crossed 62:25
CRR 1:16
CSR(IL) 1:16
current 9:10,10,15 17:20 28:14,16
currently 7:16
customary 66:15
customers 9:5 15:9

D

D 2:12 12:22
date 52:23 57:21 59:14,18,20,20 63:1,3 67:3 68:8 69:8 71:7
dated 52:16 64:5,6
dates 5:25 6:1,5,7 23:21 30:24 34:6 34:11 51:13,14 57:18 59:25
Dave 45:10 47:10
day 8:2 35:12,15 60:13 68:4,16
decide 21:19
dedicated 45:9,23 48:15
define 24:17
defined 25:20,25
definition 23:15,25 24:6,23 25:13,24 26:7,15,16 27:5 27:15,22 33:19 38:22 39:4,15 40:9,11,25 41:19 41:22 42:13 43:1 43:10 45:9 48:5 48:20 49:2
delete 54:5,12
Department 2:13
Deponent 67:10 69:7
deposition 1:9 3:1 3:11 6:10 7:6 22:11 32:2 46:16 52:4,7 62:24 63:10 66:11 67:2 67:6,11 68:7,11 69:1,8,12 70:10
deregulation 10:14
describe 20:18
describes 28:11
describing 30:16
Description 64:1,2
designates 58:4
detail 31:2
diagram 49:11
diagrams 43:24 44:5,9 45:11,21 46:2,11 47:18,22 48:3,7,14,20 49:1 49:8
different 10:7 56:6 59:17
differently 42:16
direct 56:25
direction 65:7
disagree 28:7
disagreed 37:12
disclosure 66:1,5
disconnect 37:17
discretion 54:20,21
discuss 27:1 45:10
discussed 26:8 31:1 36:1 43:5 50:16 55:18 57:6
discussing 26:13,25
discussion 21:9 60:3
discussions 5:22 17:14 20:1 29:18 30:5 35:25 59:3 59:23
distance 9:4 15:8,9 15:11
docket 1:5 4:5 10:8

10:11 33:1
document 28:8 52:14,21 53:1,4 53:10 56:18 58:12 59:4,7,9,10 60:5
documenting 62:15
documents 18:4,11 52:4,9 64:4
doing 59:24
done 60:4
down 19:10,17,20 19:24 20:6,8,18 20:22 21:3,6,8 39:25 47:2 51:18 51:23 54:5,19 56:19 63:1
draft 22:18
drafts 28:6
draw 21:1 45:24 48:3,19
drawing 13:25 43:24 44:9 47:9 47:12,18 48:6
drawn 44:5 49:8,11
drew 45:11,20 46:1 46:10 49:1
Drive 3:24
duly 3:3 68:5
during 24:12 29:7,8 38:15,16 39:12 41:21 44:2,9,11 48:8 55:18 59:1

E

each 10:21 28:5 36:6 55:6
earlier 24:18 26:24 53:25 62:25 63:6
easier 40:19
Ed 47:13
effect 11:21 37:6
effort 62:13
eight 9:20 10:1
eliminate 54:1
employ 65:12
ended 51:22
entered 69:14
entire 55:3 69:11
entitled 52:22
entry 8:13
Errata 69:1,16
ESQUIRE 2:3,12
establish 27:25
established 36:4
41:17
et 62:16 69:5
even 14:17 26:20
ever 3:11,18 12:9 12:12 16:18 19:8 19:15,16 24:14 29:3 36:11 38:20 39:11 42:22 43:7 43:20,23 44:8
every 19:24 35:4
everything 19:17,21 20:22 29:4
evidence 65:9
exactly 62:7
EXAMINATION 3:5 57:10 62:22
examined 3:4
example 18:3 53:9 57:21 59:11
except 23:7 36:1 41:15
exception 22:16
exchange 28:6
exchanged 28:9
exclusion 33:20 37:14 38:23 48:21
excuse 49:18
exhibit 22:11,21 23:4 42:1 46:16 46:20 52:7 56:14 56:16,18 57:21 58:2,15,16 62:24 64:2
exhibits 57:15,17,18 64:1
Exhibit-1 22:6
Exhibit-2 52:10
Exhibit-3 56:15
Exhibit-4 56:21
experience 9:17 11:10 13:25 14:1 15:17,18 29:14
Expires 68:19
explain 25:5
explanation 45:10
exposure 11:11
extent 52:20
e-mail 52:14
e-mails 52:5

F

fact 36:1 50:16
Failed 45:9
fair 17:23 30:12,13
fall 14:13 28:18
familiar 9:20 38:24 39:4
fast 60:20
FCC 15:24 36:4,9 41:17
Feature 12:22
February 7:20,24 9:16 22:14 24:13 24:15,24 25:14 35:6
feel 27:14
feeling 11:2
few 16:21 33:3 57:13
file 50:25 69:4
filed 4:5 5:8 15:21 30:19 31:7 32:20 34:1,19 44:1 61:24 62:1,9,12 62:19
filing 10:13 11:6 50:17
final 60:15
finally 61:22
find 15:18 29:23
fine 46:22,23
first 3:3 47:1 58:16 59:12
flip 53:11,19 54:13
folks 17:15 23:7
following 25:23 66:4 69:14
follows 3:4
foregoing 65:3,7 66:9 68:6
forget 8:22
form 60:21 67:8
forth 17:22 28:18 63:7
frame 37:16 48:8
Friday 5:9
from 4:22 6:17 9:11 20:14 22:14 26:1 27:20 35:6 36:13 36:19 39:16 43:20 44:7,21 45:5 47:11,17,18 49:24 52:14
front 22:9 43:2 46:14
full 3:22
FULTON 65:2
further 25:24 62:21
65:10

G

GA 2:7,16
Gallo 66:8,9,13 69:3
gave 34:5
general 13:14 17:1
generally 13:10,11
Georgia 1:14 3:25 8:14 10:9,17,19 11:4 65:1 66:4,6
getting 34:23
give 23:22 32:2
given 65:9
giving 31:23
go 15:18 21:7 22:23 28:17 29:3 32:4,6 33:11 56:10 59:13 60:20
goal 11:17 20:4
going 11:1,2 17:8 17:12 23:19 25:5 26:5,6,16 39:20 51:7 52:6 55:3 63:6
good 3:7,8 55:5
Government 9:19 9:24 10:6 11:13 13:25
group 1:3 7:18 12:22 17:15
guarantee 59:19
guess 15:6,23 17:21 44:18
guidelines 18:25

H

halfway 44:19 47:19
handwriting 52:24 53:7,8,10 55:6,21 55:25 57:2,3,17
handwritten 64:3
Hang 31:22
happened 14:6
happens 42:7
having 14:17 38:6
headers 59:5
heading 56:3,5
headings 56:8
hear 38:20 39:11 42:22 43:7
heard 12:9,10,12,14
27:17
hearing 37:1 65:9
help 39:23 50:8
helps 26:21
her 7:9 13:11 23:22 32:2 37:1 40:20 48:6
hereof 67:5 68:9
hey 29:4
him 50:22
his/her 68:7
house 4:1

I

idea 55:5
identification 22:7 52:11 56:16,22
identified 22:10 57:16
implying 45:25
important 23:22 31:2
Inc 1:3,4,7 66:8,10 66:14 69:6
include 12:23 13:1 13:4 14:3
includes 23:8
independent 37:19 43:14 44:8
indicate 46:20 55:12 56:2 57:4 63:2
indicated 69:15
indicates 57:22
indicating 47:20 54:15
industry 7:13 13:13 17:2
initiated 33:1 34:1
instance 8:25 38:6
intent 27:1
intention 19:23
intercarrier 41:14
interconnection 17:25 19:1 20:5 21:13 22:12 23:18 24:1 25:3,11 28:2 28:22 29:20 30:2 36:21 37:7 39:6 39:13 40:12 41:2 41:23 42:3,14 43:8,18 44:1 51:19
interested 65:13

interLATA 12:24 13:1
internal 23:5,5,6
Internet 39:17
interpreted 37:14
interstate 12:23 15:24 36:9
intraLATA 13:4 14:3,8,12,19 15:5 15:8,11,11 41:13
intrastate 13:1,4 14:3,12,16,19 15:4 36:8
involved 12:7 13:24 30:11 48:14 59:2
involves 31:24
IP 43:4
ISP 39:16 43:4
issue 17:16 21:23 22:17 23:15 24:2 24:7,9,10,12,14 24:17,19 26:12,25 27:2,15,23 35:2 56:8 60:5
issues 6:1 14:9 17:5 19:25 20:2,7,8,9 20:10,14,18,19 24:20 27:2 29:1,2 30:1,25 43:5

J

January 1:12 3:2 4:6 69:8
Jeff 34:13
jest 60:3
job 7:20 8:4,9,12,18 9:11 10:3,5,8 11:23 17:20,24 18:23 19:3,11,13 30:16 31:3 38:3 59:24
jobs 10:6 11:12 17:21
joined 23:24 24:3,4 27:6,21 35:6
joining 62:12
Judicial 66:3
July 24:6,15 35:7 42:25 43:11 49:17 49:18 50:2,5,10 60:10,14 61:3,8 61:11
June 44:5,20 47:17 48:10 49:14
jurisdiction 68:17
just 3:19 4:19 5:6 6:20 7:7 10:22 13:11 16:25 17:1 18:13 19:25 20:14 22:5 23:2 27:9,25 30:7 31:16 32:11 36:25 37:21 41:25 42:8,16 43:12 44:6 48:6 49:24 53:11,19 54:13 56:3,5 57:16 60:19,20,22

K

keep 21:24
keeping 28:14 59:25
key 19:25 20:2,7,8,9 20:10,18 21:4 23:15 24:2,7,9,10 24:12,14,17,19 27:15,23
kids 35:16
kin 65:10
kind 9:2 39:21
kinds 19:9
King 34:14 42:23
know 3:14 12:14,21 15:13,14 16:2 17:11 20:14 21:4 32:23 34:16 37:12 38:8 39:9 43:4,20 47:11,23 49:13,20 53:14 56:4 58:24 61:10,11,14
knowledge 15:3

L

laid 15:19
language 18:13,14 18:15 20:15 21:18 25:18,21 26:1,4,5 28:5 38:25 39:2 40:20 41:3,9 42:6 54:2 55:15,17 57:6 59:21 60:1
last 5:9 10:5,8 27:10 28:17 50:20,22 60:22
lasted 49:21 51:21
LATA 25:20 41:10
lateral 9:13 10:6
Law 9:19,24 10:6 11:12 13:25
lawyer 3:9 4:17 23:7
layoffs 17:8
lcecil@wcsr.com 2:9
lead 38:11
leading 44:3
learn 28:1
leased 54:18
least 4:4
leave 8:8 47:2,8
Lee 1:16 66:19
left 54:24
legal 2:13 32:23
let 5:6 14:11 16:10 27:17 31:16 32:11 35:2 37:12 44:6 46:17 48:1 52:13 52:21 54:11 55:2 56:24 60:19
let's 22:23 33:11,14 40:23
like 5:16 10:2 13:6 18:15 33:10 52:14 53:21 55:6 58:3 63:6
Lilburn 3:25
limited 22:17
line 5:18,20 11:8 18:10 21:2 35:20 44:25 61:22 69:20 69:23 70:1,4,7,12 70:15,18,21,24 71:2
lines 31:5 32:16 35:21 62:10
little 10:22
LLC 1:3
local 7:17,17 8:13 9:5 15:7 23:15,25 24:7,23 25:13,19 26:7,15 27:5,15 27:22 33:19 37:13 38:22 39:5,15,18 39:18 40:11 41:1 41:11,14,19,22 42:13 43:1,10 45:2,8,22 47:9 48:5,15,20 49:2
lodge 60:21
long 8:18 9:4,6 15:7 15:9,11 42:18 49:20 51:20
look 29:5 46:12 53:1 55:3 58:2 61:19
looking 20:15 21:18 21:20 46:16,21 49:24 59:16,18
looks 52:14 53:20 55:6
Loretta 2:3 7:7,9 57:12,24
losing 39:21
lost 39:24

M

mad 11:1
made 36:13,24 37:3 38:23 47:12 63:4
make 5:8 14:11 16:10 18:20,25 27:17 34:22 35:3 37:1 56:13 66:4
making 36:19 37:5 37:20 59:5
Management 7:18
manager 7:16 10:9 10:11
manually 59:13
many 10:6
margin 53:4,17 54:24 57:1
mark 22:4 52:6 56:17 58:8
marked 22:6 52:10 56:15,21 58:3 59:12
market 8:17 9:3
marketing 8:10,12 8:15,16,23 9:1,7 9:11
materials 18:4,8,11
matrix 21:23 29:1
matter 66:9 67:3 68:7 69:12
may 21:17,18,22 27:11 30:6 49:10 52:16 58:4 60:3 63:7
maybe 8:19 10:22 14:4 17:19 27:9 27:10,25 28:1 31:11 34:19 35:12 39:24 50:20
ma'am 38:18 39:8 40:15 41:9 44:2 44:12,14 49:5 51:6
mean 13:7,9 18:7,9 28:17 29:11 32:25 45:21
meaning 41:11
meant 12:17 55:14 57:4
meeting 28:24 35:5 35:16 36:12,25 38:5 44:10,11,20 47:17 48:10 49:1 49:14,17 51:19,20 60:9 61:5,7,9
meetings 4:22 6:17 18:19 19:10,18,21 21:11,13 22:13 23:6,9 27:1 35:11 37:24,25 38:3,15 38:16 43:13,19
memory 44:8
Michael 52:15
might 40:19
mind 6:19 7:8 25:22
mine 54:16,23
minute 31:13
minutes 16:21 33:3
Mississippi 25:3,19 25:21,25 26:4,15
misunderstanding 42:12
months 8:9,19
more 23:20 30:2
morning 3:7,8 6:16 52:3
mostly 12:4
mother 8:6
much 3:15
myself 39:24

N

name 3:22 32:24 69:16
nature 18:1
NC 58:3,17
need 3:19 10:23 19:9 31:13 48:11 54:1
needed 12:1,3 51:8 60:4
negotiating 47:21
negotiation 18:19 19:21 21:13 22:13 23:9 29:7,18 35:4

37:24 43:19 44:10 44:11 49:13 60:18 61:2 62:16
negotiations 6:17 12:8 13:16,24 17:25 18:5,12 19:1,12 20:6 23:16 28:3,9,22 29:8,10 30:10 39:13 44:2 51:20 59:2 60:9
negotiator 38:12
Network 29:15 30:1
never 24:9 36:24 48:25
new 8:6 28:6
next 36:17 55:11,25 57:5
Nicole 2:22
nine 8:19
Nobody 20:12
North 1:1 4:5 25:8 25:10,22 26:6,13 26:17 27:7,13,19 32:22 39:7 40:14 40:17 42:19 50:14 62:11
Notary 68:19
notation 58:8,16
note 19:13,25 21:21 50:4 51:15
notebook 22:2
noted 49:22
notes 4:22,23 5:3,23 5:25 6:11,12,14 6:15,16,20 18:20 18:25 19:5,16,22 19:22 20:17 21:14 21:17,24 22:11,19 23:4,5,5,6,8 28:21 28:23 29:1,3,6,12 34:23 35:1 37:2,8 37:22,23 38:3,9 38:15 43:12,16 44:4,7,16,20,21 44:22 45:5 46:6 46:10,12 47:17 48:6,13,23 49:9 49:24,25 50:7,11 51:19 53:4,6 54:15 56:6 59:3 61:10 64:3
November 37:8,11 37:20

O

oath 3:17 48:19
object 13:6 23:19 39:1
objection 60:21
objective 20:5 21:2
occur 28:10
off 22:23 28:5,5 33:11 35:12,15 45:17 51:25 56:10
offered 15:8 36:6
official 51:15
Off-the-record 22:25 33:13 45:18 56:12
Oh 45:1
OK 55:11,24 56:2
okay 3:14 4:10,12 4:20,23 5:1,16,18 6:19,25 8:7 9:21 10:17 11:19 14:6 16:16 17:11 18:24 23:13 24:9 25:1 25:16 27:3 30:8 31:10,14 32:6 33:24 34:15 35:18 39:10 40:22 42:10 42:20 44:6 45:14 46:13 47:7,11,16 49:12 51:18 52:20 53:7,9 54:8,11,13 55:4,14,20 56:2,7 56:13 58:14 59:1 60:8,13,24 61:12 61:15 62:5
OKs 53:17 55:7 57:1,4
one 3:16 11:1 14:9 18:3,17 26:1 30:17 31:25 41:4 56:14,24
ones 5:3
only 3:15 21:4 54:24 59:11
open 26:12 27:1,2 29:2 47:3,8
order 7:5 34:24
organization 8:23 9:7 10:4 11:15 17:12
organize 18:4,7
organizing 18:11
original 42:6 69:18
originated 36:2 41:15
other 5:3,3 7:10 9:3 10:22 11:19 14:1 17:15 18:18 35:12 47:16 52:6 53:21 53:23 59:14
others 18:5
Otherwise 10:25
ought 19:16
out 4:1 10:24,25 15:17,19 16:4 17:19 29:23 31:12 32:4 33:3 34:24 39:23 58:3 62:25 67:4 68:9
outside 8:24 43:15
outstanding 24:20
over 10:21 17:19 26:1 29:3,19 30:15 36:17 39:17 43:4
own 6:6 53:22,23
O.C.G.A 66:12

P

page 5:18,20 17:18 17:19 18:10,17 30:15,15 31:5 32:18 35:19,21 36:18 44:18,19,22 44:24,25 46:20,24 47:2,5,6,19 52:22 53:12,24 54:6,12 54:17 55:20,21 56:25 58:15,16 59:12 61:19 62:10 67:4 68:9 69:20 69:23 70:1,4,7,12 70:15,18,21,24 71:2
pages 46:25 59:14 65:7
paper 46:4
part 4:4 19:13 31:3 51:8
participate 29:17 30:4
participated 23:12
particular 33:1 35:10
parties 20:19 21:3 24:1,5,20,23 25:12 26:13,25 28:4,9,18 35:25 36:20 40:12 41:1 41:10 55:14 56:9 57:7 60:14 65:11 65:13 67:10
partnerships 8:24
party's 36:6 39:5
pay 15:3
payments 39:19
Peachtree 1:13 2:5 2:14
Peacock 4:18,19,21 5:1,23 7:23 17:15 18:5,11 19:7 28:24 29:4 38:11 42:23 50:13,24 52:15 53:16
Peacock's 38:14
perhaps 14:1
period 9:23
person 28:13 38:2 50:24
personally 68:4
person's 55:6
pertained 23:17 24:1 25:7
pertains 26:7
petition 31:7,11 32:20,23 34:10,18 61:18 62:1,8,11 62:14
petitions 30:19,23 61:24
Phyllis 1:16 66:19
pick 35:16
place 20:1 30:25 50:19 51:14 61:7 62:15 67:4 68:8
placed 58:23
places 15:13 55:10
please 3:23 13:20
point 24:11 27:4,21 30:2 34:25
points 53:3
position 8:5,21 9:10 9:10,16
positions 10:7
Possibly 56:3
practice 19:20 38:14
preparation 5:2 31:7 32:19 33:7,8 33:17,25 61:23,25 62:8
prepare 6:9 7:1,5
preparing 8:17 34:9
present 2:20 8:2 22:15 23:8,10
pretty 3:14 55:5
prevent 39:15
previous 56:16
previously 55:19
pricing 11:15
prior 8:9,20 13:15 13:23 24:24 41:21 49:4 62:12
privilege 31:25
probably 4:18 6:7 11:24 34:14,20 35:23
problem 59:8
procedure 28:3
proceeding 23:21 33:18 50:14 62:19
process 28:2,12,25
produced 6:16 52:4
prohibited 66:12
promise 30:9
promising 27:11
promotion 9:11
proposals 28:7
proposing 27:4
protocol 39:17
provide 34:12
provided 34:11 54:10 62:14
provider 15:7,8
providing 11:25 15:10
provision 55:12
Public 10:18,19 15:22 68:19
pull 18:14
pulling 12:2
purchase 36:6
purport 44:21
purposes 39:18 41:14
Pursuant 66:1
put 21:22
P-55 1:5 4:5

Q

question 3:18,19 5:13 10:24 13:18 14:20,23 27:10 30:9 31:17 32:10 32:14 33:5,23 35:20 39:25 40:2

40:3,7,16 43:6 48:1,12,18 60:22
questioning 11:9
questions 34:24 57:8,13,14 61:16 61:17 62:6,21 65:5
quotation 45:5
quote 45:11
quotes 45:3
quoting 16:23 44:21

R

ran 35:16
rates 15:3 16:2,3 66:15
RE 69:3
reached 55:16 60:14
read 6:13 14:21,22 17:10 32:13 40:6 42:16 67:10 69:11 69:13
reading 42:8
ready 34:23
real 8:9
realized 37:16
really 25:23
reason 15:6 35:10 38:2 42:25 69:22 69:25 70:3,6,9,14 70:17,20,23 71:1 71:4
reasons 69:15
recall 34:8 37:1 40:16 43:20,23,25 46:9 50:7,23 52:19
recently 16:8,15 17:7
recess 32:8 52:1
recip 39:19
recollect 34:18
recollection 16:20 27:3 37:18,19 43:15 50:8
recollections 37:21
record 6:21 21:22 22:1,5,23 28:1 31:17 33:11 41:25 45:17 46:17,19 51:25 54:11 55:2 56:11 69:15
redline 50:5 52:5 59:17 63:4,5
redlines 28:6 47:25
reduced 11:15 65:6 67:8
refer 40:25 44:19 47:25
reference 36:1 37:22,23 47:1,20 47:23 49:10
referenced 4:24
references 47:16
referred 42:13
referring 6:15 31:10 41:3,18 42:1,4
reflect 6:1 37:2,8 44:4,16 46:17 48:6,13 50:11 54:11 55:2 60:23 61:10
reflected 43:12 49:9
reflecting 28:6 59:9
reflects 59:20
refresh 50:8
regarding 20:1 21:3 23:6 37:13 48:21 49:2
Regulations 66:2
regulatory 10:10 15:17
relate 17:21,25
related 17:5 45:22
relates 33:18
relating 48:3,20
remained 8:1
remember 34:25 36:11,18 37:5 47:14 49:23 59:23 60:2,10
remind 3:16
repeat 3:19 14:20 25:9 27:18
repeated 48:12
repetitive 35:2
report 66:8
reported 65:4
reporter 11:1 14:22 32:12,13 40:6 66:7 67:7 69:10
Reporting 66:3
represent 65:7
representative 66:7
request 69:13
requested 14:23 32:14 40:7 67:6
required 25:24
resolve 25:22 47:21
resolved 24:21,23 25:7,13
respect 20:19 22:19 25:10 32:19 58:14 61:25
Respondent 1:8
responsibilities 8:12 10:10,12 17:20,22,24 28:19 30:17,18
responsibility 19:14 31:3
responsible 28:14
restate 32:9
restroom 32:4
result 65:14
retail 8:16
review 6:25 28:23 28:25 29:6,12
reviewed 6:11,14
Reviewing 11:24
revised 58:3,17
revisions 5:8
Rice 2:4
right 7:18 8:4 11:17 18:6,20 21:14,20 23:11 27:16 29:22 37:14 44:22,23 54:12 56:17 60:20 61:12
rights 11:16
Roberta 1:10 3:1,3 3:24 19:8,17 64:3 67:2 68:5,13 69:7 70:10 71:8
role 29:25
RPR 1:16
Rules 66:2
running 17:19

S

Sam 45:11,14,14,20 45:24
same 5:19 34:5 37:4 37:15 42:7 67:7 69:13
Sandridge 2:4
saying 16:11 46:1
says 35:21 39:9 41:3,10 44:20 47:8 50:4 53:24
school 19:25
second 5:6,19,20 23:17 24:1 27:20 29:19 31:22 39:5 39:13 40:12 41:1 41:4,22 42:2,2,14 42:19,24 43:8 44:1
secondly 3:17
section 5:19,20 38:25 42:1,5,17 47:20
see 30:20 31:8 36:15,16 40:23 45:12 53:5,20 55:7 58:9,21 62:3
seeing 17:1 37:22 37:23
seek 10:14
seen 16:6,16,18 52:17
separate 22:19
separately 21:21
service 8:16 10:20 15:22 16:3,24
services 7:17 9:4 10:15
serving 30:2
session 29:7 55:19 61:3
sessions 29:19 31:1 62:16
set 15:16 16:4 17:19 17:21 67:4 68:8
several 4:14
Sheet 69:1,16
Shiroishi 2:21 35:24 36:13,18,24 37:5,20 38:20 39:11 43:20,23 44:8 46:10 48:2 48:19,25 49:8 59:24
Shiroishi's 35:24
Shore 2:12 3:9 5:15 13:8,11,15,21 14:18,21 15:1 16:13 22:4,8,24 23:1,23 31:16,22 32:11,17 33:12,14 33:15 39:3,23 40:4,10,22,24 41:8 42:4,11 45:17,19 46:22 47:4 48:9,17 51:25 52:2,12 56:13,17,23 57:9 57:14,23 60:8,19 61:16 62:6,17 63:9
show 40:20 52:13 52:21 56:24
side 9:17
sign 67:11
SIGNATURE 71:7
signed 24:5 27:8,14 27:20 35:8 36:20 37:7 39:14 40:13 40:18 41:7 42:24 43:7 44:13 49:4 69:16
since 56:5
sit 32:7
situations 55:13
six 8:9
sold 9:4
some 11:25 14:17 15:12 21:11,12 24:10 27:4 35:18 40:21 44:5 46:4 52:6,8 53:8 57:14 61:15 62:6
someone 26:23 59:16
someone's 53:21
something 21:22 28:1 33:20 51:22 53:25 61:11
sometimes 34:24
somewhere 44:18
sorry 6:4 7:7 21:6 25:9 32:15 39:20 45:1 47:6 51:4 57:25 58:6,7
sort 3:14 28:4,8,17 63:5
Southern 1:3
specific 23:20 60:2
specifically 34:8
spills 30:15
Sprint 16:17
staff 10:16,19,20 11:4
stand 48:23
standard 18:13,14
start 28:4,5 31:11
started 7:24 19:3 51:21

starting 44:22,24
state 3:22 10:9 15:4 15:23 30:19 36:4 36:8 41:17 42:25 43:8 44:21 61:24 62:9 65:1 68:2
stated 65:4
statement 36:20,24 37:1,3,6,18,20
statements 36:14
states 1:3 10:7 35:24 68:6
stepped 33:3
Stevens 1:10 3:1,3,7 3:24 17:24 19:8 19:17 22:9,10 23:2 25:6 30:9 34:22 41:2 45:20 52:3,7,13 56:25 57:9,12 62:24 64:3 67:2 68:5,13 69:7 70:10 71:8
still 40:1 54:12
Street 1:13 2:5,14
Strike 52:20
struck 58:18
Sub 1:5 4:5
SUBSCRIBED 68:15
substantive 21:9 29:18 30:10
suggested 60:4
Suite 1:14 2:6,15
summer 23:17,20
support 12:1,2 62:14
supported 10:7 11:20,22
supposed 19:4 35:22,23 63:2
supposedly 60:14
sure 7:8 11:7 14:11 16:10 18:7 20:24 22:24 27:17 33:12 35:3,22 56:9 59:5
swear 48:18
switched 12:9,10,13 12:18 13:22 14:2 14:14 15:3,16 16:3,6,11,12,14 16:19,24 36:3,5,7 36:8,9 41:16 48:3 48:21 49:3
sworn 3:4,17 36:23 48:2,25 68:6,15

T

take 19:4 20:17 21:14,25 28:21 31:2,14,20 38:3 38:15,25 45:6 50:18
taken 3:12 22:12 67:3,7 68:7 69:12
taker 51:15
taking 19:13 59:3 66:10
Talbot 45:10 47:10
talk 4:3,20 5:1 7:3,4 11:5 31:25 33:4
talked 29:23 44:17 50:13 62:25 63:6
talking 6:23 10:21 60:20
tariff 15:20 16:5,25
tariffs 10:13 15:21 16:6,11,12,14,19 17:1,5 36:7
TCG 1:4
team 23:24 24:3,5 27:6,21 35:6 62:13
technical 30:1
telecommunicatio... 1:7 7:13 69:6
Teleport 1:3
tell 3:17 5:22 18:25 19:4,15 26:23 51:3,4,10,11,12 53:9,19 62:7
tells 20:10
tenure 24:13
term 6:19 12:9,10 12:12
terminate 15:12
terminated 36:3 41:16
terms 13:7 15:15,19 16:23 30:8,10 60:15
testified 3:4
testifying 11:21
testimony 4:4,7,10 4:24 5:2,4,8,24,24 6:3,7,8,13 11:24 11:25 14:12 16:21 17:18 21:12 24:22 30:14 33:16 34:2 35:19,19,24 36:23 44:17 48:2,25 49:7 50:17 51:1,9 58:11 61:16,20 62:10
thank 23:13 45:16
thanks 26:21 57:9 57:25 63:9
their 9:5 12:1 23:17 43:9
thereto 65:6
thes 21:5
thing 3:15 31:25 55:3
things 9:2 11:5 18:3 18:18 19:9 34:23 52:6
think 7:12 10:21 16:22,23 21:11,16 26:18 30:15 33:22 34:21 40:8,22 43:11 45:25 46:1 53:15 56:8 57:23 60:3 62:17
third 54:18
though 13:20 43:6
three 12:15,17 46:25
through 22:14 24:5 35:7,22 36:3,6 41:16 44:19 53:11 53:19 54:14 55:3 58:8,18
time 9:23 10:13 13:23 21:21 22:15 24:4,5,11 27:13 27:19,20 37:16 47:20,25 48:8 51:3,5,21,21 57:7 57:8 67:4 68:8
title 67:4 68:9
today 4:3 6:10 7:1,4 41:21 49:7
together 12:2,15 18:15
told 19:8 50:25 62:17
toll 15:11 41:13
top 54:17
touch 50:6
tracked 29:2
traditionally 41:12
traffic 12:21,23,24 13:2,5,23 14:2,3 14:13,14 15:5 23:15,25 24:7,24 25:13,19 26:7,15 27:5,15,22 33:19 37:13 38:22 39:5 39:15,16,18 40:11 41:1,12,13,19,22 42:14 43:1,10 48:5,20 49:2 54:24
transcript 65:4,8 66:15 67:11 68:6 68:10 69:11,18
transpired 32:8 52:1
transport 45:9,23 48:16
treated 41:12,13
trick 30:9
tried 39:24
trouble 14:17
true 65:8 68:10
truth 3:17
try 10:23,24 60:21
trying 10:14 16:9 29:22 35:1
Twenty-five 7:15
twice 26:19
two 9:8 50:20,22
two-thirds 47:2
type 12:6
typed 58:20
typewriting 65:6
typewritten 56:19 67:8
typically 20:20 51:22
typing 11:24

U

Uh-huh 42:21 46:18 54:7 61:21
umbrella 14:13
under 3:16 13:7 14:13 48:19 65:6 66:11
underlined 58:21 58:24
understand 3:18 13:17 14:2,14 15:16 17:3 26:21 29:25 40:2,2,5 60:16
understanding 12:16,18,20 13:12 13:22 14:7 15:25 17:2 25:2,12,17 26:3,10,14,22 41:20 42:15 43:9
understood 19:12
unless 23:20
until 8:1 9:25 10:23 10:24 35:17
update 29:1
use 18:5
used 24:18
using 6:19
usual 66:14
usually 28:25
UTILITIES 1:1
utilized 18:12
utilizing 12:21

V

various 10:15 53:3 55:10 59:5
verbatim 19:23 20:3
verified 6:7 30:24
verify 5:25 6:4
version 21:17,20 28:14,16,17 41:5 56:18 59:9
versions 59:6,17
very 23:21
voice 39:17 43:4
vs 1:6 69:6

W

wait 10:23,24 33:10 41:4
want 4:3 5:13 6:20 27:25 32:3,4 35:18 52:8 60:22 61:15
wanted 14:10 38:22 39:14 43:1,10 50:25 60:20
wants 31:20 46:23
wasn't 24:12 52:18 60:6
way 38:23 47:2 54:18
wear 41:20
weeks 50:20,22
well 17:21 18:9 28:2 31:16 62:19
went 30:11

were 6:1 8:11,13,15 8:18,22 9:6,21,24 10:11 11:4,14,20 12:7 13:23 15:7 19:4 26:13,25 29:10,23,24 30:25 35:11 42:1 43:5 44:4 46:2 47:21 48:14 50:17 55:14 56:8 57:18 59:2,3 59:3,14,18 65:6
weren't 15:7 30:11
West 1:13 2:5,14
we'll 31:14 56:13,17
we're 10:21 20:15 21:20 33:18
We've 50:16
while 29:23
white 43:24 44:9 46:3
wide 41:10
Willis 52:15
WITNESS 5:14 13:19 14:24 31:18 32:5,9,15 40:8 41:6 46:24 48:13
witnesses 11:20,23
Womble 2:4
word 5:18 19:24 20:23,23 21:19 22:17,17 53:13
words 12:15,17 21:4
work 4:1 12:6
worked 8:24 9:1 14:10
working 8:13,15
works 3:15
wrap 27:9
write 19:9,17,20,24 20:6,8,18,22 21:2 21:5,6,8,19 39:24 51:18 53:12 55:11 59:13
writing 53:15,18,21 53:23 55:8
written 18:24 52:23 53:2 55:24 58:12
wrote 4:10 22:18 51:23 63:1

Y

Yeah 32:5,11
year 4:6
years 7:14 9:8,20 10:1

0

01 24:13,15

1

1 22:11,21 23:4 42:1 46:17 64:3
1.1.1 53:12
1.9 47:2
10 35:23
10:39 1:12
11 35:20
110 35:21,23
1201 1:13 2:5
1376 1:5 4:5
14 35:22
15 44:22,24,25
16 37:8,11 49:18 60:10 61:3
17 18:10 49:17 50:2
17th 4:6 50:5,10 60:15 61:8,11
18 58:4
19 35:7 42:25 43:11
1986 9:25 14:4
1990 14:4,6,12 15:2
1994 10:2

2

2 31:5 32:16 52:7 62:10 64:4
20 1:12 3:2 55:20 69:8
2000 58:4
2001 7:21,24 9:16 12:8 22:14 23:17 23:24 24:6,15,24 25:14 27:6 34:17 35:6,7 37:9,11,21 42:25 43:11 49:14 49:17,18 50:2,10 52:16 60:10 61:3 63:7
2002 34:17,19,20
2003 1:12 3:2 68:16 69:8
216 46:24 47:6
217 46:24 47:19
218 46:25
22 52:16 63:7
25 7:13 61:22
26 7:13 49:14 56:25

3

3 5:18 17:18 18:10 18:17 30:15 31:5 32:16 41:11 42:5 52:22 53:2,12 55:20 56:14,19 57:15,21 58:2 61:19 62:10,24 64:5,5,6
3.23 47:21
30047 3:25
30309 2:7
30375-0001 2:16
335-0765 2:17
3500 1:14 2:6
3587 69:4

4

4 17:19 30:15 31:5 32:18 53:24 54:6 54:12 56:18 57:15 57:23 58:15 62:10 64:6
4/18/00 58:3,17
404 2:17
404)888-7437 2:8
4300 2:15

5

5 35:19,21 54:17
5-14-37 66:12
5.3.1 42:1,5,17 55:25
5.3.1.1 38:25
5.4.1 57:5
5.4.2 57:5
5.4.3 57:5
5/22/01 52:23 53:2 58:9,12 63:1,2 64:5
567 3:24

6

6 5:18
6th 44:5,20 47:17 48:10
6/12/01 56:20 58:21 58:24 64:6
675 2:14

7

7 5:20 44:18,25
7:00 35:17

8

8 5:20
8(B) 66:2
8:00 35:17

9

94 10:2

DKt. 020919-TP

Exh. 7 Notes, cont'd.

NCUC- Depo. of R. Stevens

5-07-03

EXHIBIT
Stevens 1
1-20-03 DL
Alexander Galloway & Associates, Inc.

182

2/21/01 Collocation Mtg w/ BST

- John Hammon [X]
- Michelle Culver
- Rhona Reynolds - atty

* Security - Provide details of what AT&T ds for security checks
  - Don Crosby info →
  - Ron Mills

Wed Bernadette Seigler Mtg
UNE P Business Mtg.

2/28 Mtg Trial or real? Hr we gvn directive not to sell to cust adv 3 lines?
- What size customers? Ds our contract apply to both bu
* - We'll ask BST if necessary to send both port & loop VSUL. Currently sending just port & wrkng.
* Msrd vs Flat rate → told only can use msrd but even if we send Flat → shows msrd on CSR
- LK up def. of ADVE, ODVE, EDVE
* LK at contract for cust care info in regards to cust switching to ATT from another CLEC: TLK w/ Denise Zalif. → Bill
- att 6, Sec 3 - Confirm in old contract local acct maintenance

[Active W = Full account As Is, Bell assigned code for moving svc as/is]

* Escalation list on website, updated monthly. Shld be updated ~~time~~. If run across error, let Ann ___ know

3/15/01 Mtg w/ BST Leah Cooper, Michael Willi

GA - Termination Liability
ATT - 6 mos. after we can order electronically
BST - Not hpy w/ dec. at all. Appealing order.
w/ ask for stay. Issue in GA+SC
No response by next Thursday. Each ~~co~~ ~~to~~
submit separate responses.

SC - Michael sending matrix that confirms
what open/closed issues are. Only 4 issues arbit

NC - Motion for Reconsideration must be filed
w/i 30-45 days after order. Not sure i
AT+T w/ file one or not. (April 9)

POI - We have BST's latest language. Wrkn
on response.

OLNS - GA available now. Other states →
Michael → 2Q Leah → YE. Want formal respon
on when available.

NC rvw of order →
Language necessary in POI, tandem. (rate

Bill hndld
- Separate agreements for AT+T + TCG
~~XXX~~ Get list of state + name for TCG

GTC
Transfer of Exchange - Sec 24.1.2. BST
find agrd to language.

attach 1 - No disagree

www.Interconnection.BellSouth.com

1595 FR 424 185

alt 2 * 2.7.1 Don't know why this was not arbitrated. ✓ w/ Greg. Same with 2.9

* 2.11 → BST has language ~~w/ send~~. Straight from the order. We agrd to it in MS. We w/ lk at.

* 3.7.3 Whole UCL issue mvd to cost docket. ✓ last sentence in MS to see how changed.

3.8 Settled, add hot cut language.
3.9.2 Confirm what we did → may hv pulled.
4.3.2: Closed - OK - W/ get MS language. BST's 4.3.2 is our 4.2.1.5 language.

5.2. Subloop Distribution → we show mvd to UNE cost docket. Issue is abt method of access. AT&T may hv language that says rates are subject to outcome of cost docket.

6.3.1.3 - 4 line & over issue. Not part of arbitration. Mvd to UNE cost dkt. Standalone out that AT&T hasn't signed → we hvn't signed. Preference is to pull language from standalone's in here & say subject to outcome of cost dkt. ~~XXX~~ AT&T w/ lk at standalone agree & can bk w/ language.

6.4.1-10 AT&T agrd to BST language in MS. W/ use that here.

att 2 — 7.1 OSDA →
BST wl get us new language. Wl Kp all Sel Cr Language out of this section. (orientire Section 7.)

8.3.1.4.3 We accepted language for all 9 states. CLOSE

8.3.1.4.9.1 tkn out → ours is 8.3.1.4.10 → agrd to accept language + rmv AT&T.

8.3.1.5 - TK all out

att 3 — SKIP → Beth nds to rvw. Once see new language wl set up mtg to discuss.

att 4 — Settled → Security issue → Collocation dkt in NC
Condo mvd to cost dkt. Wl get wl Rhona + John

att 6 — Nothing

att 7 — Issue 8 on NC order
3.20 Jay + Milner hv bn exchanging language.
4.2.1 Not arbitrated in NC. Wl ✓ + see status. Rvwd in NC order, pg 7.
6 - Deleted in MS. AT&T owes response to BST.
CCP → qrtly update w/o amendment to contract.

att 8 — No issues

att 9 — Performance → On web. BST wl send up updated pkg. → also on website. Wl also say that we get whatever PSC says we get.
There is also Perf Measure dkt in NC.

AH 13 BAPLO → no ltr updating contracts in current agree in MS.
BAPLO agreement stands alone.
BST wl ✓ data on + get bk wl Bill.

MS - Signature page → Michael wl send bk to AT&T tmo (3/16). Bill wl get Greg to sign.

Georgia | Lkng at staff rec
Issue 13 - Roxanne wl put together proposed language
Issue - DKt over, Lrtng on order

GT&C Sec 16 - Do whatever do in KY
24.1.2 BST get agrd to language..
att 1 Nothing
att 2 2.7.1 → Language that has already bn agrd to
7/25/00 2.11.1 - Lv open for AT&T to rsw
BST nds to add in language (same as in MS)
3.7.3 → MS language on UCL
3.8 Not wtd → resolved
3.9.2 + .3 - Line Sharing → Mvd to xDLC DKt 7892-U. Dnt think AT&T wnts language (rmv lang) until DLC DKt over.
4.3.2 - Use MS language
5.2 → We wl rsw whole thing
6.3.1.5 → Go wl BST language → add language about using mkt based rts for cu wl 4 or more lines.

6.4 We're OK w/ this.
Sec 7 - 7.1 → W/ provide reworked language
8.3.1.4.9 → AT&T agrees. Bill brought up MCI order
that says CLEC has access.....
BST w/ see what has proposed & get to us.
MCI lang. ← 8.3.1.4.9.2 → Deleted, 10 still there, 11 deleted
8.3.1.5 - 1.5.11.2 → all coming out
att 3 Tandem language added here
att 4 add Security language, delete condo language
W/ wt on order to see interpretation.
att 5 Nothing → Michael w/ ✓ to see if
updated LNPG. - 10/99 latest version we have
att 6 Nothing
att 7 Roxanne w/ put lang in 1.1.1 (just like NC)
3.2. See if gs here or att 2. Bradbury & Milner
4.2.1 → use BST language
4.6 + 4.7 → Deleted
6 - AT&T owes response.
att 8 Nothing
att 9

GA PSC website to get BST proposed
1 CA w/ Alltel.

SC → No date set on termination liability.
Just tk out language.

- No recip comp on IP.
- ATT dsn't get tandem rates.

Both bk in ofc 3/19 → try to set mtg
~~for~~ Thursday 3/22 to tlk abt att 3

Objective on ADR is to be sure there are no ?'s
abt process/procedure if cms to thr.

~~AAG~~ Check att 2 MS contract for
term language

3/23/01 LSAM Natl. Call

- any prob if we lift edits for non-seq DID #'s. ✓ in ICA's to mk sure we don't hv any language tying vs to sequential. SK is silent on it.
att 5, 2.13 Porting of PNP DID
3 main changes
- SP01
-
-

** att 2/2.13 → Our language 2.11 → compare to see our language to MIA.
Our language come directly from FCC order.

Term liability → FCC has said in 3 orders we are resp. We hv trd to offset costs
** MIA explns process to show revs reduced.
LK at MIA language.

196

4/12/01

BST Mtg Leah, Michael
Bill, Roxanne, Michael

GTC

-NC statute → wl use M3 language in contract. See GT&C 24.1.2
Cpy of statute gvn to BST

16-Dispute Res - Rox gv lang on. Deleted ref to separate agreement

aH7

aH7 - 1.1 - 1.6 for us. CCP lang gvn to BST. (Not doing JTA - Sec 6)
Scratch -

This was already used language. We want our lang plus 12 mos.

4.2.1 ~~Michael gv proposed language to BST.~~ BST wl send internally for review. (Issue 10 on arb order)
Finding of Fact

BST filed objection in NC. 4.2.1 (Issue 1) was one of the issues.

aH3 - Bill cvrd mtg. Wl schedule mtg in early May. Michael wl send us Beth's dates for avail.

aH3 - IP Telephony 6.1.6 in M3 cont addresses point of when using IP protocol wl address issue. For NC, AT&T proposal is to use M3 lang & add track & trace.

aH2

OLNS, OS/DA - all language shld be available next wk. Keith Milner told Leah that he & Jay hv agrd to most

issues. BST drafting contract lang.
Question w/ it default to AT&T or BST.
Either all AT&T or all BST.
OLNS implementation schedule → Leah
provided to us. FL next state ordering
OLNS. (att 3, 7.2)

Wil amend FL standalone to reflect
New OLNS.

att3 - Tandem IC → obj filed by
BST on this issue.
1.3 in NC contract. BST wl IK at language.

att4 Security → AT&T propose go bk to 99,
Thomas going bk to IK at. Bill volunteered
10 to go up condo if they accept our lang
on security.

att7 - Issues 4.7 - BST thing bk to client,
4.6 agree to use at. ↳ wl try to get agree to lang

att 2 2.7.1 If new, change mrk. If existing,
use Telric rates. Bill read MS language
trad AT&T wld agree to temp language until rev.
al of cost dkt. BST wl draft interim language.
Use must it MS lang, site docket.

2.12.8 - Roxanne wl ✓ order again.
We won in SC.

3.7.3 agrd to changes.

alt 2 cont.

BS2 - after get order in GA, can we negotiate for all 9 states? W/ lk at language again after receipt of order.
3.9.2 Silent until hr order. AT&T wants placeholder that references OKT, parties unable to agree.

4.3.2 - OK
5.2 - Wrkng on subloop lang to provide BST.

6.3.1.3 - We suggest pulling in lang from standalone. AT&T w/ send lang we want.

- AGRD TO ALL OTHER CHANGES ON ISSUES LIST FROM BST.

- WLD LIKE ORG CHART ONCE CONSIDERED FINAL

ISP Dispute Resolution - BST was going to ✓ w/ Beth to see what latest pos. is. They w/ ✓ w/ Jerry. AT&T wld lk latest BST prop., what things are tied together.
What are previous & future dates?
Full meal deal settlement

FU on 4/12
Leah call → 3 issues

Hot cut - Darrell said wasn't sure we discussed
implementing right away 5/15 Implement across the board - agreement letter
DSL order across 9 states → Probably, (Steve Kliman)
When get order w/ let us know

SONET language for MCI - Leah has rqstd

* - Send e-mail on standalone
to Michael - hold up is term lang.
Wlng to pull lang pending res. thru arbitration
- FU w/ Roxanne on this b4 gtng w/ Michael Willis.

* Randolph Tel Co. - Run thru HQ again to see it agree or disagree

* Bill + I w/ cl Lillian to discuss what we can/can't do in MS.

204

5/9/01 BST - Beth Shiroshi, Ed Honeycutt, Leah Cooper, Michael W
AT&T Bill, Roxanne, Sam, Michael

8.9 stays consistent for 3 mos b4 establish change for DS3.

• Bill requested info on BST view of their MOUs which wld trigger POIs. Also want them to verify our data. BST wl discuss & see if possible. Traffic data that will trigger nd for 3POI or physical POI.

Wl BST negotiate higher trigger.
8.9 M is exchange of traffic.
(POI)
Billing - Interofc Tran ded per mi per mo. per mileage
& facility component (per month fixed)
Billing POI at UNE rates. No recip comp except on PPOI.

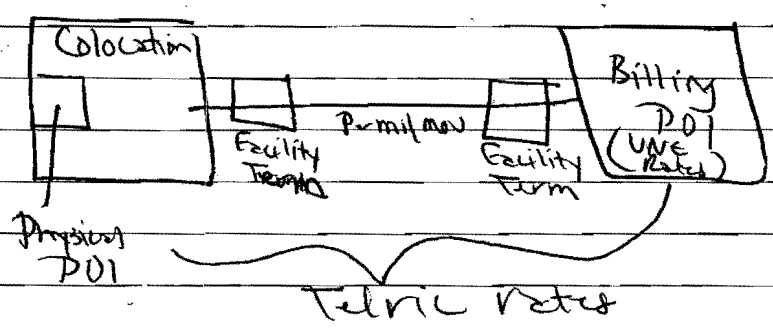

1 charge covers both Fac Term charges

BST lkng at Recip Comp order & hv ?'s abt caps
- Do they include total minute or just transport minute

BST will consider → Footing bill up to 2nd threshold which triggers 8.9 M. We don't pay up until we truly get to DS3 level.

- Section 155 of Order addressing adoption date of recip comp

Dave - Need to know BST pos on recip comp order. Transport is issue. We can lk at both ways in doing our analysis.

- Sam asked how firm we were on 2 omis. BST (Beth) suggested may be able to lk at 25 or 30 (in lieu of 20). Beth suggested we could do this on state level instead of regional deal. AT&T will submit some mileage scenarios for each state.

TSP Settlement -

In 9/15/00 doc → issue 1 → firm on $1.4M. We are seeing if acceptable. Second piece would lk at $X for period from where 1 ends until date of order.

AL - is it May or December??

Both sides lking at what #'s should be. Both said should hv their's by end of wk. Will share numbers. AT&T preference is to settle up to the date of order. BST agrees. AT&T needs to confirm with orders. Will get bk w/ BST.

BST can write 3 sep V's or all together. Include Media1 in settlement. All complaint letters were prior to acq of Media1.

BST has disputed some of our bills. They'd to decide if payments are inclusive or exclusive of disputed charges.
BST will query what that is.
Bill P. assumes we want 2 issues kept separate.

Bill w/ cl Beth once have our #s to meet again

Brought up track + true up position.

Let Beth know if $14M in 1 is acceptable.

attachment 3 - W/ meet Wednesday, all day. Redline by Monday.
AT&T on Tuesday, AT&T on Wednesday.

Send Beth.sbiroishi@bridge.bellsouth.com
404-927 8997, att3 NC

Tue agenda - NC

- Everything but att3
- GA → Michael w/ send
- ELTA/TAFI → no center language

Alan Sunshine - 404 351 9512
Jim Lamoreux - In place for arb - Dec, Dec - Current

- Michael avail 11 am/tmo if wnt to meet w/ Jeff

RJ AT&T ExPate info on DSL
(can be found) on reg net

5/15/01 BST Meeting Leah, Michael
Jeff King, Bill, Roxanne, Sam, Michael

SL1 - Michael → add optin bk in. Go into BST standard language to see language. BST tk out as a stand alone. Section 2 → order coordination

✓ Subloop - SME w/ cm bk w/ counter proposal. hopefully in a.m.
• Michael sent smthg to Bill for Broadband. Bill said not happy with it. Michael requested list of proposed language.

NC
↓↓
No TLG in LA, SC, MS

GT&C ✓ See my blueline

ATT 1 ✓ Pg 15 TK advantage of GA order, No rate per order in NC, TN. FL → w/ lk at standing order + result of cost case to see if addressed. Michael W. confirming NC. Manual charges for NC + FL shld be $0 also.

ATT 2 ✓ 2.7.1 We have prob w/ words "in fact". BST won't use MS lang. because based on premise that we wldn't use certain things. Will propose lang. to each other by Fri, 5/18.
2.10 add tree-up + OKt reference
2.12.8 Jeff King said NO PROBLEM. OK.
3.7.4. agrd to change.
3.8.5.7 agrd to change.
3.9.2 BST sending vs standard language on DSL → not in ICA for BST yet.
3.8.2.2.8 ✓ng on version
3.9.3 BST w/ send vs new line sharing language.
6.3.1.3 Use stand-alone, mkt based lang here.

ATT 6 — 1.2.3 Use MS language.
1.2.2. per use or per unit of vertical
1.11.3 Send Michael language from 4/28.
1.17.2 Send language to Michael
all other stuff OK.

ATT 7 — 1.1 Split into 2 - consistent w/ MS
1.5 ~~Reference most current CCP here.~~
Change - remove attached hereto.... reference
4.7 W/ change to "best efforts" instead of when possible. Use Michaels lang w/ change

ATT 8 — Rmv ref to Exh C. - BST

ATT 9 — agree to new.

GA ↓↓ — Michael w/ get folks wrkng on subloop lang to interpret what GA order says abt subloop or INC.

- BST w/ go bk to GPSC to get clarification on Security issue. How many do we think we'd copies on. BST proposed grng vs M&P's + random sampling.
- Transfer of Exchanges - Reference GA statute
- BST lkng at ADVF - Go bk to Dan Caldwell grp to lk at ADVF + ODVF
Michael W. agrd to lk at.

5/16/01 Leah Cooper, Michael Willis, Beth Shiroshi, Ed Honeycutt
Roxanne, Michael, Bill, Sam

- Opting in to ELL order
- Don't hv answer on whether wl share minutes with us

ATT3 Comparing 4/18 version to 4/28

• ATT checking to see it def at 1.11 is OK (Local Channel - BST considers closed issue)

Version 4/28 2.1.3. AT&T wl provide definition of interconnection traffic to BST that they (BST) will consider.

2.1.8 End at → shall be done.
2.2. Per Dave, dsn't lk objectionable. He wnts to lk at further.
2.2.1 Remains open

Version 4/18 2.8.3 BST to provide language from other ICA with different CLEC (Beth)

Version 4/28 3.1-3.2 BST to review and comment to AT&T

3.2.1 Within 45 days of either party's request.
3.2.4 same as above.
3.3.6 ATT to rvw to see if wnt Exhibits & reference from 3.6.6 4/18 version
Beth wl send updated diagrams. → include wireless.
3.5 Vng to see if open. BST
3.6 → 3.7 Bill cl Dave abt certain provision he dsn't see.

4/28 3.23 - 3.29 Lv open for AT&T to rvw.
BST will send new diagrams which include AWS.
4/28 4.10 - BST vng (Beth) to mk sure OK.
4/18 5.3.1.1 BST local, 2 pic to AT&T is issue Bill + Dave nd to discuss. \ Clsd lang → wl chng to MS language
4/28 6.1.1 BST vng to be sure OK. Not in orig 4/18 version.

4/28 6.1.2. Bill + Dave wl talk. Version 4.18 5.3.1.6

4/28 6.1.8 AT&T to provide language to Beth

4/18 5.3.1.7 Beth to provide language.
4/28 6.1.10 - FCC order may hv resolved. BST nds to tk bk + lk at. Hv lang in MS that says lk at, BST wl lk at order + get bk with us.
4/28 6.1.11 Use MS language, Bill agrd OK. Put in PLF.

4/28 6.1.16 BST vng on current lang. wl modify if necessary.

Local Network architecture
Lengthy discussion regarding mileage, 8.9 M minutes, etc. ~~[illegible]~~. Bill askd if wld apply regionally. Bill's concerned that in states wl orders that are better, we shld go with that.

→ Beth wl type up action item list. Hv info to us by COB Tue, 5/22.

~~Bill w/ gt bk to BST w/ date to meet~~
~~again~~ Mtg w/ BST 6/6 Wed,
9-1 pm.

[redacted] Subloop language mtg 10:30-2,
Thursday 5/31.

5/22/01 Network arch call
Mike Lacy, D. Talbott, Allison, Tom Hammond, Paul Cain
Deborah Rosini,

Rptng Requirements: We reqstd BST rpt
MOU to us to rectify w/ our bills.
BST constantly disputing their orig minutes to us.

Internet Offhook Switch people
Tom suggesting we tlk with
Tony Culmme

Sign Off
Tony Fera - Network Nancy Kester - Network
Paul Danforth - ?

6/16/01 Mark Lindsey, Leah Cooper, Michael Willis, Beth Shiroisi, Ed Honeycutt, Michael Kerno, Roxanne, Bill, Sam

- POIs - adding new switches, AT&T wl see what we can share wl BST abt new switches. BST wl lk to put language in contract limiting this so new CLEC's who opt in don't hv open door. Beth suggested putting info in forecasting section under proprietary cover.

- Separate TCG & AT&T contracts
  8.9 M separate for each

- 1.1.1 Beth has issue wl outside plant & cust prem ~~BST wl rvw~~. AT&T wl rvw order & advise where came from. Will show as eg. instead of w/o limitation.

1.1.2 BST wants to lv open until LID transit traffic. Not accepting our language at this time.

1.2 Wait until resolve 8.9 M issue.
1.5 Strike - agrd by both insert 1.7 S/R version
1.7 OK wl language
1.8 Lv open.
1.9 Lv open. AT&T wl clarify BST drawing of LC application wl Dave Talbott
1.10 OK with new language
1.11 Go bk to Dave Talbott
2.1 - 2.2.6 OK → see Bill's language sheet
2.8 - 2.8.3 - BST agrd to move

2.8.2. - OK with def by BST
2.9.1 - change to Point of Interface,
no LC change → just defining what LC is
BST rvng to see if worded correctly for
last sentence. AT&T proposed new lang
for last sentence. Once BST verifies what
it means, w/ probably IK like our lang.
as long as two way → AT&T ✓ w/ Dave
Talbott.

3.6.6. Renumber to 3.7 → insert Local Tand Inc
language → Head: Trunking arrangements

3.7 and 3.8 OK w/ BST
3.23 - 4/28 OK → resolve w/ diagrams
5.2 BST gv vs new language to
rvw.

5.3.1.1 BST w/ rvw our proposed
language.

Disagree still there on middle, unnumbered
paragraph.

5.3.1.6. TK out center, don't cap AT&T Suit
5.3.1.7 Bill + Keep acceptable, once eff order
that governs. BST w/ gv vs some language.
5.3.2 BST rvwng order. Thinks we may
be right.

5.3.3. 3Q2001 may hv to be changed.
5.4.5. open

4/28 version 3.24.1 add language requested by AT&T.
OK w/ other.

AT&T w/ re-read 3.24 Lang in its entirety & mk sure we are OK.
BST wants lang & diagrams

* Gv BST language from MIA Part 11C 1.3 (8YY Language)

~~Transit~~

Local Interconnection Offer

- AT&T w/ gt bk w BST on switch forecast (Bill thinks 5-7)

- BST countered w/ 25 miles.
AT&T w/ go bk & 1K at 25 → our cost analysis based on 30.

Incumbent on 25 miles

- Transition → how will we transition for those that already meet/exceed 8.9M

- BST can agree to 1 per LATA first 6 months, 1 per LATA second six months, 2 per LATA thereafter.

- OSS Rates - Bill w/ FV w/ Jeff King on these.

- Tue, June 19 all Day - Lenox
  Finish NC, Send GA + KY

- ~~Wed, June 20 9:30-3:00 - AT+T~~
  Fri, June 22 9:30-3:00 - AT+T
- Tue, June 26 9:30-4:30 BST Center Local Inter
- Tue July 10 9:30-3:30 - Lenox

- ISP Settlement

  • AT+T wants 95% of disputed amount + 95% of interest owed

Melisa
Date of Birth
6/9/57
888703
2100
248735944

6/11 Collo Mtg - Rhona Reynolds, John Hamman
Roxanne, Michael, Bill, Darlene, Sam

Northpoint assets → Interim agreements w/ sunset once new agreements are in place.
Although Language same, contracts w/ be maintained separately

GT&C - may use abbreviated version from standalones. Collo - use state respective versions of sectg/collo. Billing attachment.
BST lkng at standalones to see how addressed.

Condo w/ not be issue w/ standalone.

For states where we don't hv arb order, won't hv condo language.

FIM - ACNA → Northpoint

Compilation of document - BST is handling.

Names are diff than on agreement already in place. Bill suggested

Get together agn end of this wk to wrap this up. Get bk w/ John.

6/19/01 BST mtg Leah, Michael W., Bill, Roxanne, Sam, Michael

- Michael W. grng vs lang on offering LATA wide clng plan as a UNE. Also has lang cvrng vertical features - lowered Cmsn ordered rates. 1 flat rate for all features.

Michael provided vs cpy of rate sheets for GA. Has re-formatted. Shld have for all states. Michael wl send electronically.

- Elec LSR rates → Bill advised Michael wl go state specific. ADUF + ODUF → can mark as interim (subject to true UP) until Cmsn rules on new cost studies filed by BST.

GA GTC 16 - AT&T lang - OK
17.1 add suite #'s 8100 + 12254
attach Disaster Recovery 24.1.2. No to add statute reference. For states w/ no statute, see Bill
8.3.1 " marks
Signature change to Orig Terry
(see pg 38)
~~9.3 add [illegible]~~
* add statement abt cal unless specified
BST thinking abt
Fortnot doc as GA 6/19/01
Sec 13 SQM
18.1.1 - 18.1.2 CAPE
a#1 Change Elec LSR charge

a#2 2.7 OK w/ lang
2.11.1,2,3 OK to strike
3.4 AT&T OK
3.5 Fix wraparound items in Chart
~~3.9.3.3 Change to [illegible]~~ 3.9.3.28. Rmv ref to

Print ISDL + Line Share lang.

3.5 cont. AT&T feels ~~[illegible]~~ per LSR, not end user.
Delete per end user. - BST agrd.
AT&T can't agree to lang / /. on pg 12
BST w/ re-vamp lang. in brackets.
3.8.3 Deleted + 3.8.4 becomes 3.8.3, OK w/ all new bolded language.
3.10.2 BST submitted new lang. AT&T w/ rvw + respond. 6/15 lang. W/ gr to Ron, shld hv response bk by Friday.
3.10.3 same as abv. AT&T w/ rvw. agrd to cite source.
4.3.2 + .3 - OK w/ deletion + language
5 - Subloops - AT&T provided new lang.
Send e-mail file. Rmv GT on UNTW anytime used.
6.3.1.2 + 3 OK
6.3.1.4 - nd clarity. Shld part be platform, define inter-switch.
6.4.10 Rmv open - all lang in 6.4 OK
7 - Bill OK w/ lang up to 8.4.2. of new lang submitted by BST on 6/18.
OK subject to ✓. See doc. for ~~changes~~
✓ FL agreement to mk sure OLNS lang in there.

8.3.1.4.9.1 MCI SONET lang here thru 8.3.1.5.12

AT&T 6 1.6.1 ~~add Section #~~ Rmv in Section #6
1.1.7 add Secty language
1.17.2.1 see copy OK w/ rest
1.19.1 Rmv 800, cannot blk 700
Exhibit E Footnote rates interim

att 7	3.20 Verify Jay OK to mv to ATT 2 1.5 Rmv lang abt att A 3.5 End sentence at website 3.7 Rmv ref to Exh - new lang
NC	GT&C 1.1 Change to 13
att 2 GA to	Rmv 2.9 + renumber 3.8.2.2.8 Rmv ref to Att 2 Exh A 3.7.5.8 - Numbered wrong?? 5 - Michael sending AT&T a clean cpy of Subloop language. Pg 42 4.1.3.2. - # wrong 7 - same as GA
SC	Update foot dates Michael wl hv new ICAs to us by Friday.

230

4/26/01 BST Mtg Michael W., Ed H., Beth, Leah (Lindsey - Intern)

LATA Wide Calling → Jim Maziar w/ BST wrote. Will set up call with him.

Media 1 Switches → How can we bring up switches into AT&T contract. Michael will find out what we need to do & get bk w/ us.

Power augmentation → Send ltr to Michael abt issue.

ATT 3 Bill will go bk to forecasters to determine which switches will be in new places (new POI's) and how many are in same place as existing POI # switches is only issue. We accept 25 mi., 8.9M orig. This will be regional offer, including MS. AT&T will get bk by end of wk

1.1.1 Use lang from UNE remand
1.1.2 Lv open for BST - want to see ID of transit traff
1.2 Bolded lang (16/12) stl open
1.8 Stl open to BST
1.9 AT&T has no local channel, want to charge BST out of our tariff. BST can't agree to this, can't transport + switching
Sugg MD to offer BS Final language.
1.11 Stl open to AT&T
2.1 Rmv "tion"
2.1.2 AT&T OK
2.1.3 AT&T OK
2.2.1 Change to interconnection - assuming we get definition.

2.2.2 AT&T OK
2.3.1 AT&T OK
3.3.2 LV open pending resolution of diagrams
3.14.1.1 - LV open to BST - vng wrding
3.23 - ~~Open AT&T~~ AT&T agrees
OK to put in 4/28 version of 3.23 thru 4
Opng sent "at AT&T's discretion ~~may use~~ following trunk gpo may be used ~~others~~, on two way trunking → agree that we wl mutually agree
5.2 BST wl find out how they are actually notifying tdy + propose language.
5.3.1.1 BST wl propose lang that tracks FCC order. We wl try to hv language reflecting FCC order on ISP → AT&T rdy to exchange agrd to exchange language ASAP. AT&T not wlng to rush thru → change of law provision if necessary.
5.3.1.7 - OPEN BST → Linked to ISP. Both parties stl agree to bill + keep.
5.3.2 - BST proposing lang that wl be included in ISP lang.
5.4.5 We'll each hv own language on diagrams.

* We owe definition of interconnection traffic. + Provide by COB today. Where we want to use it.

KY

Header - Rmv TCG, + disagrees
Preface - Rmv TCG, Def + dcr - BST open
24.1.2 - No statute. BST w/ add lang we agrd to.
2.7.1 - Use GA lang.
2.9 - Open, see order
2.11.8 - Delete lang at end
3.5. Delete per end user, fix chart

* XDSL → gv BST redline version by COB Friday.
* LATA Wide Lng - BST w/ re-work, we w/ send fdbk

SEE KY cpy for further open items.

→ Michael w/ tk our redline + ask it can be applied to all 9 states.

6/28/01 Thurs - FL DKT
6/28 PSC - 01-1402-FOF-TP

SL - att 2, Exh C, Port
att S - Exh A - #Port

234

7/10/01

BST
Leah, Michael, Paula, Karen
AT&T Michael, Bill, Sam, Roxanne
INC - add lang that says "Paties disagree on ___, however we agree to following for ordering

- Michael W. has sm curr comb language she wl share to discuss on Thurs.

- Michael sending LATA wide language to us.

- advsd BST - MCI SONET OK - delete all ded. transport + insert

- ISP - request BST mark-up our version Mtg wl Beth to discuss (possibly conference call)

- xDSL → BST hasn't complted going thru

- Michael W. rng maintenance lang we sent. Thinks response is lang OK.

~~Agenda for Thursday~~:

Network architecture - Michael wl go to Beth to say can we accept settlement lang. for
Reginal → KY, NC, MS, AL, LA, SC, TN | Not for GA+FL
AT&T wl go bk to client to share final lang. + get bk wl BST.

In instances where states didn't address or are addressing in open dkts.
MDU's - Nd to decide what lang wl go into ICA if don't decide by filing ICA. Nd to either hv placeholder + ref dkt or hv BST or other lang + ref dkt.

ISP → Line Sharing → Treat as interim lang as necessary. Not sure whose lang to use. Roxanne → Line Sharing we may hold. Lang wld say "Parties disagree. Wi 60 days parties wl file proposed. If stl don't agree, parties wl file B+F final lang.

7/13/01
ATT 9 - OA + LA Only states with specific orders, we'll just say follow orders. In other states, refer to BST's SQM's.

ATT 4 - BST sent matrix of issues for each state. AT&T has nothing to do.

ATT 3 - Bill wl handle all updates on Net Arch. ISP → Rox recs B+F. In NC where it wasn't arbitrated, Ref FCC order.

Subloop - KY + NC → ref cost dkt, use BST lang

✓ * LK at rate sheets, see if access terminal rates are in there.

✓ * FV wl Jon → do you hv anything we've agreed to that differs from what FCC order says

✓ FU w/ Owen → NC+KY absolutely
nd response by Monday.
GA - FL - SC

✓ FU w/ Jay on OS/DA long tdy

7/16/01 Beth + Leah
Bill, Karna, Roxanne

• POIs that exist tdy

2) Wld be wlng not to include #2
in Bill's resp to BST for NC+KY

→ BST suggesting whether for 7 states (not 6 more)
Wld the proposal minus

Send Beth counter proposal

7/17/01 Beth w/ redline vs bk, if AT&T didn't
touch it, she didn't

NC Due Thurs 7/19, KY due Fri 7/20

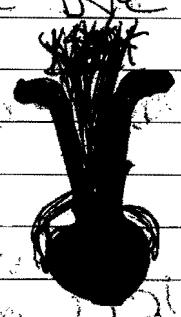

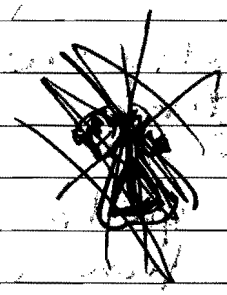

404-B -

237

7/18
NC + KY Pricing

Order out of NC → Exceptions filed to order. Not prepared to incorporate exceptions

7/23/01 Jerry Hendrix, Michael Willis

Last spk 6/21, to resolve recip. comp.
Brief due this Thursday.
Last AT&T offer → AT&T/TCG thru 6/1
Pay $36M to resolve issues, rmr forward to implement.
BST last → $29M. (shld go thru 6/14 now)
ATT 3 long for FL + GA, implement FLC order for single rate drop issues w/ cust. interface → not address until 1/1/03.
$31M cash. CIA - not collect anything up to this pt for CIA, but want agreement in place.

- FL - We w/ file motion for extension due to reconsiderations. Extension w/ ask for 14 day trigger.

- GA - Due 14 days after wrtn order in arbitration ( )

- NC + KY

8/1/01 Michael, Leah

POI - Thinks ~~we~~ they are OK w/ 4, Beth may hv 1 counter. We w/ wait to receive.

ISP - Ed may hv redline bk by end of wk.

Michael w/ cl Ed → hold off on generic ISP lang, get concensus on Roxanne's lang.

Subloop → Go over lang on Friday → won't file just 60 day language Michael w/ receive

Line Sharing / Line Splitting →

are we in agreement that goal is to have language in. Leah responded yes, w/ lk to.

8/1/01 Phil Tongue org → Kim Gaddy

- Send ICA + issues list to Pat Patello once finalized. Cmtd to do by 8/10.

-

Forward DSL to Mellany

8/9/01 Mtg w/ BST Michael W., Leah
Phone: Jerry Hendrix,
AT&T: John Blimmell, Bob Rivera - Phone
Roxanne, Michael K., Bill, Sam

Dir. Listing Changes to record → Carrier ownership changes to AT&T. Bill → Don't believe any work done by BST → no evidence given to us to indicate changes. Jerry → Highlight work activities done to change → Bill → Show us, but then indicate where tariff or ICA shows that's what we pay for. Don't believe changing carrier ownership is part of list of things we pay secondary listing charge for.

Not GA or FL

Leah → arbitrated issue in other states → Bill → we'll ✓ arbitration -
Jerry → BST w/ not mv off of position but w/ send us add'l info.
Michael W. confirmed ~~Q~~ svc order w/ not be cut off.

BST w/ bring info to 8/16 mtg.

Tandem Interconnection

Jerry → BST requesting we provide info to BST indicating areas we serve.
Bill → For both GA + FL, we will provide maps indicating coverage.
John B. → shld hv GA by end of today.
Michael → asked abt retroactivity → Jerry's initial take is not retro.

We w/ exchange data on 8/16.

Subloop Outstanding Issues
Special Construction
access at vault to UNTW / Riser
Who obtains property owner permission to build
Who pays after req. to activate

Power argument Discussion

(CLEC negotiations)

BST: Steve Martin, Vendale, John Hamman, Jim Tamplin
Lhona, Bill Darwin (product mgmt)
AT&T: Sam, Michael K., Roger, Jeff King, Bill Peacock

FL - 27 properties, 14 more mostly in NC + other
BST to ✓ true up from old $3+ to new $6+ crrd by order
5 GA, 1 AL, 4 NC, 1 KY, 1 TN.

Vendale + Roger w/ wrk together on this.

8/17/01 Mtg w/ BST Michael, Leah
Bill, Roxanne, Roberta

- ✓ Elec rates w/ Jeff King for FL
- POI discussions to designate POI - both parties w/ work on gtng mtg together AT&T w/ put in ltr. W/i wk we'll set up mtg date.
- ISP redline coming bk from BST
- Collocation - 2 yr, AT&T won condo Get Sam to F/U.
- Copies of Northpoint standards
- Michael W. gtng w/ his LCP people to mk sure manual is updated to reflect FL changes.
- Michael w/ send elec version of amendments

9/17/01 Michael W.

- Sending msg. to SME's for mtg nxt wk to discuss subloop for other states

- Line Sharing - Don't think alot of outstanding issues. Still think can hv regional language.

KY → mvd to cost dkt → process is what it is
NC → "
MS → Process is what it is

Bill Peacock
CNAM Agreement - Bill w/ forward msgs
Want us to negotiate CNAM agreement
Michael K → rvw w/ him. Previous lang was BST's standard.
NC, GA, FL → priority states

- ISP
Paul Cain → fax language to him
Know that BST & AT&T hv agreed to mirror FCC rates for both local & ISP. Lot of orig lang not necessary. For 2001, BST proposes pay for every min, regardless of local or ISP (not capture 3 to 1 ratio). Feb 2002, parties meet. See if BST overpaid us. Don't think AT&T w/ go over 3 to 1 until Nov or Dec. No massive payment

Sec. C.2 Ray Sinclair & BST working on to see if any changes to para.

Ed Honeycutt

9/19/01 M1 Switch Transition — Patty, Ellen Schmidt - NJ
Ann Smith, Denise Berger - Atl

all facilities & cirktry that goes bk to LEC are coming over to LNS network
(all Telephony based switches & facilities)
Name changes also simultaneously going on in L+GA world

Payable wl be cmng to Alpha or Staten Island centers.
Receivables wl be cmng from standard location

- May hv change in dates on transitions of M1 switches. May here on 9/20 call.

9/20/01 Leah, Michael W., Michael K., Sam

Leah - Out from Nov 5 thru Dec. Nds to wrap-up.

- AL → hoping for order in December → per Leah. Wl lk to see what we hv in AL arb dkt, see if we can close w/o order.

NC - subloop, currently combined, Line Sharing
Rvw order on exceptions, forward to BST.

Don't nd to file ltr in NC because lang. actually says 60 days after motion settled.
KY - File ltr, BST w/ sign & cpy vs. ltr filed tdy
GA - Subloop language complete. Same ltr for 11/8.
Conforming agreements - BST opposed to this
Want to file comprehensive attachments

Line Sharing - assume regional, AT&T w/ confirm. Rates must be interim.

Hot Cut Process Improvement - Michael K. w/ rvw & get bk w/ Leah

Remote Site Collo - AT&T recvd lang. Not prepared to rvw or hold up DSL lang. - wnt ref in DSL documents. Agree all provisions shld be in collo.

9/20/01
Media Switch Transition

Definitely not going to mk 9/28 date. I'd to communicate to them immediately not happening. Denise w/ go bk to BST & advise. The earliest date for Jax is 10/12. W/ hv firm date w/i a wk from today.

9/25/01 Subloop Language - Michael W, Leah, Paula

apply for KY + NC now, differences for FL
BST wld be agreeable for 7 state language
GA language - delete first 2 para's in language.

UNTW on 9/25 is proposed replacement

- Delete def UNTW, alrdy cvrd in def
- BST prefers mutually agreeable language for advance request (90 days) or 90 days (we will ✓)
  Regional - 7 states

ISP Compensation

* New 1.2 language - Jim Maziar met w/ Ray S. cple of wks ago. Explain call flows.
  Jim sending to AT&T, cpy Ray

* Change all recip to intercarrier
* Ed sending us language on annual rvw instead of quarterly
* Ed rvwng 1.5.2.1-3 - agrees to rmv state lang subject to ✓
* 1.5.24 - Ed wl get bk with us. Considering putting bk in.
* 1.5.3 (second one) Ed wl think abt + gt bk
  BST ≥ proposed lvng struck.
  1.6 Ed wl tlk over again with his folks
  1.8 Kp lang subject to AT&T ✓ BST suggested
  may not needs

10/3/01 Michael W., Leah BST
Sam, Bill, Michael, Ray Sinclair AT&T

- Combining contracts → sending joint & sev liab lang to NJ to approve. BST wants our contracts together. Wld nd to work thru POI, issue if combine contracts. M1 wld TCG agreement.

- MDU issue in FL clsd out.

include

- Rwd Subloop - few outstanding issues
- " KDSL - few outstanding issues
- ISP →

10/10/01 ISP Discussion w/ BST
- Ed, Beth, Leah, Michael
- Roberta, Michael, Sam, Jeff King, Bill

— 1.5.2.1 BST stl argues that FCC order allows for ability to use lower of state rates. AT&T - we agrd during nego that it wld be FCC rates as stated. BST prob is that in TN & FL, state rates are lower than FCC.
→ SUGGEST WE FILE "Best & Final"

— 1.6 Best & Final language as well
Bill gv them info from Jerry Hendrix ltr of 6/19 to Greg Terry where he specifically outlines FCC rate caps.

— LATA wide calling

- BST sub pic'd to AT&T for LD, AT&T pays switched access on orig or term

— AT&T wl file something on Monday, 10/15 regardless.

11/1/01 BST - Ed, Michael, Leah, Beth
AT&T - Michael, Sam, Bill, Ray, Jeff

- Rhona not available.

- Intent of call is to formulate plan for negotiations. Rhona nds to be brought on board.

- AT&T position is still the same as what it was on our last conversation.

- AT&T would like to resolve w/i 30 days if possible. Don't want to wait out 60 days.

- Email Michael with proposed dates.
We suggested 8, 9 + 12

- BST position is 60 days is for negotiating ISP FCC Order, not trying to add new lang on call flows. It will include def of latawide

AT&T w/ send formal requests to BST to begin. W/ send to Michael. W.

258

11/9/01 MediaOne switch Transition

AT&T - Roberta, Ann Smith, Michael K., Bill
BST - Jan Flint, Michael W., Rhma Reynolds, Billing group, Michael Moore

Bill → BST aware of our desire to transfer ownership of AOCN code (6040) changed to 7125 (TCG) assoc. OCN + ACNA's w/ now be assoc w/ 7125.

→ LATA Wide Local

11/16/01 BST: Ed H., Beth S., Rhma R., Shelly Decker
AT&T: Jeff K., Ray S., Bill, Sam, Michael

Beth - BST understanding that ATT3 is Facil Based → Both hr own network + interconnect
ATT2 - UNEP.
Bill, Ray, Jeff - agree this is OK
FBased defined by Beth as Not using BST facilities (switching). For us, that means LNS + ALD are FB.

- Beth + Ed agreed we had closure on FCC Cap + 50% lang by adding ref to mid yr settlement. BST w/ put lang in + resend to us.

FB only

- Beth made clr that offering right now is for Fac Based.

BST interprets that lang says "anything" over switched access stays. Beth brought up as if.

point that AT&T orders all as switched access lines ~~[illegible]~~ and they can hold us to that via contract language.

BST agrd: Fac Based

- ~~AT&T local EU → LPIC'd to BST mks It call → term to BST EU~~
  ~~AT&T bills both orig~~

~~1~~ Fac Based It IntraLATA

1

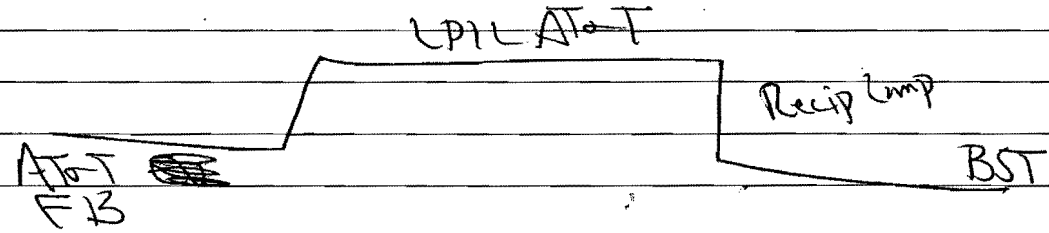

2

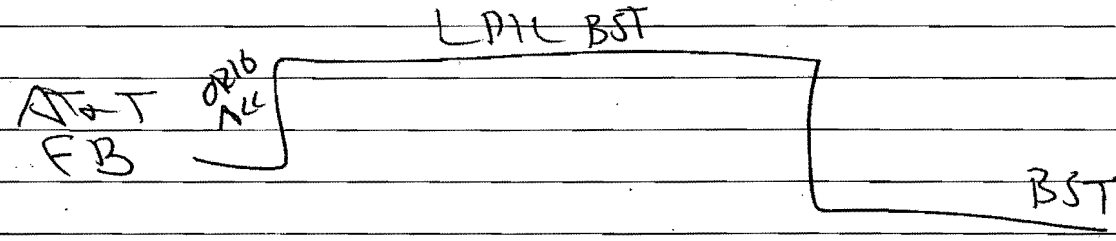

3

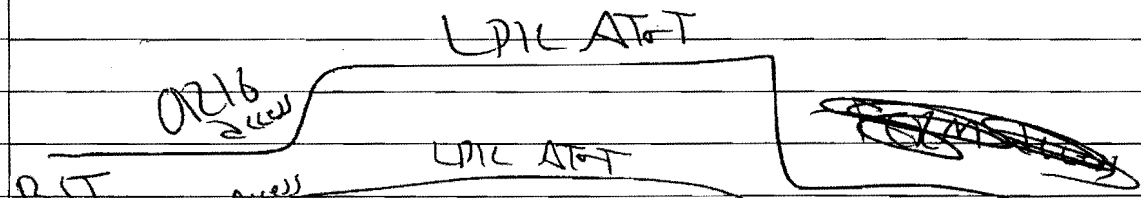

3B

4

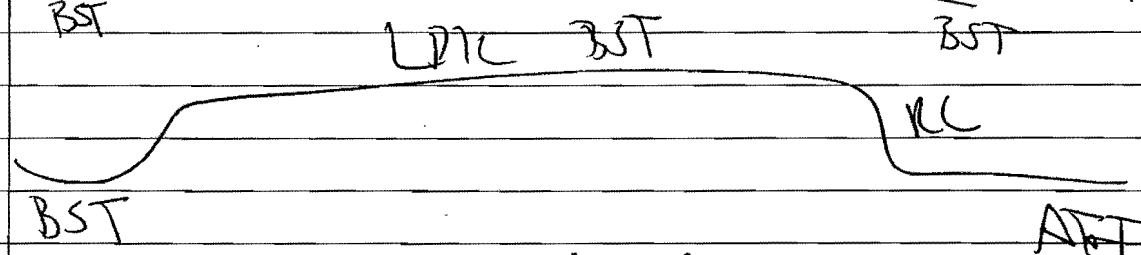

4 is recip of 1

~~Transit traffic~~

In ATT 3, nvr defined local traffic.
Bill - OK with using interconnection traffic instead of local
Beth - May want to define local where it is necessary to use such as in compensation

Michael K - Definition of local + LT.
Beth wl work on

~~11/27 available all day~~
~~11/28 - 9-12p~~
~~12/4, 5 or 7 - anytime~~

11/29/01 LATAwide Discussion w/ BST
BST: Michael, Jim M., Beth S.
AT&T: Sam, Ray, Bill + Jeff

- Beth sent FB revised language.
- Bill advsd different nds for Con + Bus.

Routing = CIC $\frac{\text{IntraLATA}}{\text{Toll svc}}$ = LPIC
Rltnship w/ CUST

- Jim + Beth - agrd we cld use BST CIC and AT&T LPIC so AT&T cld bill end-user. (CIC code in LPIC field of LSR)
(THIS MEETS CONSUMER NEED)

12/4/01 BST: Rhonz, Ed, Beth, Michael, Jim
AT&T: Bill, Michael, Ray, Jeff, Sam

Rvw of Beth's redline - Resolution of EB time to resolution of UNE-P (BST position) → Beth S.

Bill rvwd AT&T proposed changes.
? - Does AT&T view 10XXXX or 1-800 traffic as same in 5.3.2 ?? Michael K. has ?

5.3.5 - open for AT&T for tracking.

Michael W. wl send vs SC into wh the next two days.

Strategy on LATA wide local:

Ray - Fight or not?
Ray - Funding?
Ray - accept ~~fact~~ billing intraLATA ca?
Ray - adopt ~~BS~~ Consumer position

Bill suggested that what BST is offering is not horrible. No to get Bvs. to move in that mindset → adopt consumer position.

12/13/02 BST - Michael W., Thomas
AT&T - Michael K., Anthony

Michael W. didn't think language shld be part of contract. Michael K. feels this language shld replace placeholder currently in place.

Anthony - #4 - AT&T offered 45 days, BST counter is 90 days. MW →
which

September - Lunch - N-Learn lead
- Rick day, place

Target Dates
April - Denise
DSL Overview
Diversity - June + July
Roberta - Number Portability - September
LNS Reorg - May
Local sales

- Share Sally Muscarella LNL mtgs
W team

Target which months to do Employee Trend survey: ~~Aug or Sept??~~ Oct

Events Team - Pam Nelson
Coordinate with them

By next month's meeting, determine date. No Mon or Fri,
1 hr to 1 1/2 hrs.

Stevens, Roberta, NCAM

From: Stevens, Roberta, NCAM
Sent: Wednesday, June 06, 2001 4:23 PM
To: Southern Region ICA Team
Subject: BST Meetings

Following are the AT&T action items from our meeting with BST today. I have also updated our issues matrix to reflect the latest decisions (or non-decisions!!). Even though the matrix reflects our action items, I thought it would be helpful to highlight them separately.

ATT 3

Future Meeting Dates:

Tuesday, June 19, 9:30-4:30, Lenox
Friday, June 22, 9:30-3:00, AT&T
Tuesday, June 26, 9:30-4:30, BST Center, Local Interconnection
Tuesday, July 10, 9:30-3:30, Lenox

*Local Interconnection Offer - Bill to see what info he can provide BST on new switches. BST will suggest new language in contract limiting this to designated AT&T switches to avoid problems with CLECs who opt in.

*BST agreed TCG and AT&T contracts treated separately for accumulation of 8.9M minutes.

*AT&T to review what order MIA language came from including outside plant and customer prem as interconnection point. Issue 1.1.1 in Bill's 6/6 proposed language.

*Local Channel and Dedicated Transport definitions - Bill to get with Dave Talbott to discuss BST explanation. Sam drew out BST diagrams.

*Fiber Meet - BST to review new language and get back with us. Bill to get with Dave Talbott on BST's new proposal (if necessary).

*Network Maintenance- BST provided new language. Section 5.2. Are we OK with the language following:

Network Management and Changes. Both parties will work cooperatively with each other to install and maintain the most effective and reliable interconnected telecommunications networks, including but not limited to, the exchange of toll-free maintenance contact numbers and escalation procedures. Both Parties agree to provide public notice of changes in the information necessary for the transmission and routing of services using its local exchange facilities or networks, as well as of any other changes that would affect the interoperability of those facilities and networks pursuant to 47 C.F.R. SS51.325-51.335.

*AT&T to review BST Access Tandem Interconnection Architectures section and diagrams. Owe BST response.

*Transit Traffic - Each party will submit their own language in the ICA.

*LNA counter proposal from BST - 8.9M originating, 25 miles, transition plan would be 1 POI per LATA in first 6 months, 1 per in second 6 months, 2 per thereafter. This offer is incumbent upon AT&T accepting the 25 miles. AT&T owes response back.

I spoke with Michael this afternoon. They are still reviewing our currently combined proposed language and will get back ASAP. Roxanne-she also agreed to modify the security deposit language to protect other CLECs--she will forward new language ASAP. Michael committed to have new set of ICAs to us by next Thursday, June 14.

North Carolina
Status Project3...

EXHIBIT
Stevens 2
1-20-03 PR
Alexander Galloway Associates, Inc.

NORTH CAROLINA ICA
OUTSTANDING ISSUES

ISSUE #	SECTION	DESCRIPTION	RESPONSIBLE PARTY(IES)	OPENED	CLOSED	OUTCOME/COMMENTS STATUS/DUE DATES
1A	GT&C, Table	Remove reference to Attachment 14 on table of contents	BST	6/19/2001	6/25/01	Completed
1B	GT&C, Definition	BST considering adding language abt calendar days	BST	6/19/2001		
1C	GT&C, 1.1	Remove reference to Attachment 14	BST	6/19/2001	6/25/01	Completed
1D	GT&C, 8.3.1	Add " to beginning of paragraph	BST	6/19/2001	6/25/01	Completed
1E	GT&C, 13	Change heading to Service Quality Measurements	BST	6/19/2001	6/25/01	Completed
1F	GT&C, 18.1.1&2	Cap I in first word "if" in both paragraphs	BST	6/19/2001	6/25/01	Completed
1G	GT&C, 16	4th sentence, proper misspelled	BST	6/19/2001	6/25/01	Completed
1H	GT&C, 17.1	Add suite numbers to notices, 12254 Bill, 8100 L&GA	BST	6/19/2001	6/25/01	Completed
1	GT&C, 24.1.2.1	Change MS to NC	BST	5/15/2001	6/19/2001	Completed
2	GT&C, 24.16.1	Delete Reference to Section # (Remove 4.2)	BST	5/15/2001	6/19/2001	Completed
3	ATT 1, EXH A	No rate for elec/manual LSR proc per NC order, BST rvwing	BST	5/15/2001		AT&T wants state specific rates, not regional.
4	ATT 2, 2.3	Change Section 14 to Attachment 10	BST	5/15/2001	6/25/01	Completed
5	ATT 2, 2.7.1	Parties disagree on currently combined language, each party to propose new language by 5/18	BST/AT&T	5/15/2001	✓ w/Rex which is	Parties submitting sep lang
6	ATT 2, 2.8	Align paragraph	BST	5/15/2001	6/25/01	Completed
7	ATT 2, 2.10	Add true-up and cost docket reference. ??	BST	5/15/2001	6/25/01	Completed
8	ATT 2, 2.12	Status of disagree, AT&T OK with BST language	AT&T	5/15/2001	6/19/2001	Completed
8A	ATT 2. 3.5	Remove "per end user" language, revamp last part of paragraph after chart beginning "BST in the normal...	BST	6/19/2001	6/25/01	C
8B	ATT 2, 3.5 Chart	Fix wraparounds in columns 2, 4 and 5	BST	6/19/2001	6/25/01	C
8C	ATT 2, 3.5 Chart	3.6 Language from GA missing in NC ICA	BST	6/19/2001		
9	ATT 2, 3.7.4	Change reference to applicable industry standard	BST	5/15/2001	6/19/2001	Completed
10	ATT 2, 3.8.2.2.8	Add word "current", remove ref to ATT 7, Exh A (CD)	BST	6/19/2001	6/25/01	C
11	ATT 2, 3.8.2.2.9	Remove second period at end of paragraph	BST	5/15/2001	6/25/01	C
12	ATT 2, 3.8.5.7	Add "d" to outline, change reference to applicable industry standard	BST	5/15/2001	6/25/01	C
13	ATT 2, 3.8.5.8	AT&T OK with BST proposed language, remove disagree	BST	5/15/2001	6/19/2001	Completed

NORTH CAROLINA ICA
OUTSTANDING ISSUES

14	ATT 2, 3.9.2	BST sending AT&T standard DSL language	BST	5/15/2001		
15	ATT 2, 3.9.3	BST sending AT&T standard line sharing language	BST	5/15/2001		
16	ATT 2, 5	Awaiting BST feedback on AT&T proposed subloop lang	BST	5/15/2001		
17	ATT 2, 6.1	Change section reference to 6.8.6 from 6.6.9	BST	5/15/2001	6/19/2001	Completed
18	ATT 2, 6.3.1.3	Define inter-switch, check if port should be platform	BST	6/19/2001		
19	ATT 2, 7	AT&T OK w/new lang subject to check. SEE BELOW New Lang - 8.5.2.6.2, remove the before AT&T, second period at end. 8.6 remove >> after AT&T.8.7.1 add except OLNS after Levels.	BST	6/19/2001		
19A	ATT 2, 8.3	AT&T reviewing new lang provided by BST	AT&T	6/19/2001		
20	ATT 2, 11.3.2.1	Last sentence, remove "the" before BellSouth and space between retail end.	BST	5/15/2001	6/25/01	C
21	ATT 2, Exhibits	Exhibits C through F not included in file sent by BST	BST	5/15/2001		Include in final draft
		ALL OPEN REFERENCES TO ATT 3 ARE FROM THE 6/12 VERSION UNLESS INDICATED OTHERWISE				
22	ATT 3, 1.1.1	AT&T to add proposed language from MIA	AT&T/BST	6/5/2001		BST rvwing. Prob with outside plant ref. AT&T wl chk order.
23	ATT 3, 1.1.2	AT&T to add propsed language from MIA, delete other.	AT&T/BST	6/5/2001		BST left open. Wnt to see how we ID transit traffic.
24	ATT 3, 1.2	AT&T OK with language	AT&T/BST	5/16/2001		AT&T submitted new lang. BST wnts to wait until 8.9M offer rslvd.
25	ATT 3, 1.43-1.44	Remove BST open and language removed	BST	5/16/2001	5/22/2001	Completed.
26	ATT 3, 1.5	Replace with 1.7 lang frm 5/12	BST	5/30/2001	6/12/2001	Completed.
27	ATT 3, 1.7	Add language "or causing to be provided"	BST	6/5/2001	6/12/2001	Completed.
28	ATT 3, 1.8	AT&T proposes deleting language	BST	6/5/2001		Open for BST.
29	ATT 3, 1.9	AT&T confirming if definition of Local Channel OK	AT&T	5/16/2001		Open for AT&T. Need to get

NORTH CAROLINA ICA
OUTSTANDING ISSUES

						with Talbott.
30	ATT 3, 1.10	Add words "or leased" after owned.	AT&T/BST	6/5/2001	6/12/2001	BST agrd to add new language
31	ATT 3, 1.11	AT&T proposed deleting, replaced by new def in 1.9	AT&T	6/5/2001		Open AT&T. Get w Talbott
31A	ATT 3, 2.1	Separate lang between AT&T and BST REMOVE "ION" FROM INTERCONNECTION	AT&T	6/6/2001	6/12/2001	Bill language of 6/6 2.1-2.26 2.2.2 last sent-open for BST
31B	ATT 3, 2.12-.3	BST changed language-confirm AT&T OK	AT&T	6/12/2001		2.2.4 same as 2.1.4. BST OK
31C	ATT 3, 2.1.5	Change Section to 2.3 from 2.9	BST	6/12/2001		with language subject to check
32A	ATT 3, 2.2	Remove "ION" from interconnection	BST	6/12/2001		
32B	ATT 3, 2.2.1	Change local to say interconnection	BST	6/12/2001		
32	ATT 3, 2.2.2	AT&T owes definition of Interconnection Traffic to BST	AT&T	5/16/2001	DELETED	Replaced by 31A above
32C	ATT 3, 2.2.5	Change Section to 2.3 from 2.9	BST	6/12/2001		
33	ATT 3, 2.3-2.7	Renumber to show as sub under MOI	AT&T	6/5/2001	DELETED	Replaced by 31A above
34	ATT 3, 2.7	End paragraph at shall be done.	BST	5/16/2001	DELETED	Replaced by 31A above
35	ATT 3, 2.8-2.8.3	Show under heading of Trunking Arrangement. OK w/lang.	AT&T	6/5/2001	6/12/2001	Completed.
36	ATT 3, 2.8.1	AT&T to review language further-AT&T OK	AT&T	5/16/2001	DELETED	Replaced by 35 above
37	ATT 3, 2.8.2	What does last sentence mean?	AT&T	6/5/2001	6/6/2001	BST explained. ATT OK. Cmpltd.
38	ATT 3, 2.8.3	Beth to provide AT&T language from other ICA with different CLEC. AT&T OK with language.	BST	5/16/2001	6/5/2001	AT&T OK w lang. See 35 above.
39	ATT 3, 2.3.1 (was 2.9.1)	Propose new language from MIA, Part 2, C, 1.6.1	AT&T/BST	6/5/2001		Both parties rvwing AT&T lang.
40	ATT 3, 3.1-3.2	4/18-BST to review and comment to AT&T. Proposal is to change the effective date to of either parties request.	BST	5/16/2001	5/22/2001	Reference in 3.2.1 and 3.2.4 in 4/28 version. Completed
40A	ATT 3, 3.3.2	BST changed language slightly. Is AT&T OK	AT&T	6/12/2001		
41	ATT 3, 3.6.6	Trunking configurations. Beth sending updated diagrams which include wireless. AT&T to review Exhibits to see if we want reference included.	BST/AT&T	5/16/2001		Renumber to 3.7. Pull lang from 2.8-2.8.3 -BST OK. BST to add lang reg 1 trnk grp per LATA
42	ATT 3, 3.6.7	Open for BST.	BST	5/16/2001	5/22/2001	BST closed. Completed
43	ATT 3, 3.7(old)	BST agreed to remove	BST	5/16/2001	5/22/2001	Removed. Completed.
44	ATT 3, 3.7(new)	OK subject to BST check	BST	5/16/2001	6/12/2001	BST OK with language. Cmpltd.

NORTH CAROLINA ICA
OUTSTANDING ISSUES

45	ATT 3, 3.8	FGB calls to tandem. BST rvwing to see why open	BST	5/16/2001	6/12/2001	BST OK with language. Cmpltd.
46	ATT 3, 3.9-3.10	Dave and Bill to discuss certain missing provisions.	AT&T	5/16/2001	6/6/2001	AT&T OK with language. Cmptd
47	ATT 3, 3.14.1.1	Add correct section number	BST	5/16/2001		
48	ATT 3, 3.23-3.29	AT&T to review language and provide feedback to BST	AT&T	5/16/2001		AT&T needs to re-read sec and see if OK with diagrams.
49	ATT 3, 4.8.2-.3	Add A to Exhibit reference	BST	5/16/2001		
50	ATT 3, 4.12.9	Signaling Call Info-Leave as is in 4/28 version, move after 4.12.8 in 4/18 version.	BST	5/16/2001	5/22/2001	Moved language. Completed.
51	ATT 3, 4.13.4.3	Use language from 4/18 4.13.5.3	BST	5/16/2001	5/22/2001	Completed.
52	ATT 3, 4.13.5	BST reviewing to see why they show open.	BST	5/16/2001	5/22/2001	BST closed. Completed.
53	ATT 3, 5.2	AT&T showed open. BST submtd new lang.	BST/AT&T	5/16/2001		BST gv AT&T new lang to rvw
54	ATT 3, 5.3.1.1	BST local, 2 PIC AT&T issue for Bill and Dave. AT&T OK with new language at end of page.	AT&T	5/16/2001		BST to rvw new lang of 6/6. Stl disagree on middle unnumbrd iss
55	ATT 3, 5.3.1.6	BST OK with language. AT&T requests remove Center	AT&T	6/5/2001	6/12/2001	Completed.
56	ATT 3, 6.1.1	4/28-BST reviewing to see if OK with language, not in 4/18	BST	5/16/2001	DELETE	Non-issue.
57	ATT 3, 6.1.2	4/28-Bill and Dave to discuss, not in 5/22 version	AT&T	5/16/2001	DELETE	Non-issue.
58	ATT 3, 5.3.1.7	Access Svcs traffic as local-Beth to provide language	BST	5/16/2001		AT&T OK w/ B &K until FCC order final. BST to submit lang.
59	ATT 3, 5.3.2	Virtual NXX. FCC order may have resolved. BST to review order and get back with AT&T. AT&T cannot accept lang.	BST/AT&T	5/16/2001		BST thinks AT&T right. Stl rvwng
60	ATT 3, 5.3.3	PLU-Use MS language, add PLF	BST	5/16/2001	5/22/2001	Used MS language. Completed. 3Q01 date may hv to change.
61	ATT 3, 5.3.3.1	Remove language. BST/AT&T agree	BST	5/16/2001	5/22/2001	Language removed. Completed.

NORTH CAROLINA ICA
OUTSTANDING ISSUES

62	ATT3, 5.4-5.4.2	Language not in 4/28 version. AT&T OK with it	AT&T	5/30/2001	6/6/2001	AT&T OK lvng lang in. Cmpltd.
63	ATT 3, 5.4.5	Transit Traffic-AT&T reviewing current language.	AT&T	5/16/2001		Each party to submit own lang in the ICA.
63A	ATT 3, 5.4.6	Mismarked on 6/12 version-BST proposes striking lang.	AT&T	6/12/2001		
64	ATT 3, 6	Determine why open for AT&T. AT&T OK w/language	AT&T	5/30/2001		AT&T OK with 5/22 language.
65	Non-specific	AT&T reviewing LNA BST offer-f/u with BST before 6/6 mtg	AT&T	5/16/2001		Counter from BST is 8.9M orig, 25 miles. Transition is 1 POI perLATA first 6 mos, 1 in 2nd 6 mos, 2 per LATA thereafter. Incumbent on AT&T accept 25.
66	ATT 4	Awaiting language from BST, BST to determine whether they will accept 2 yr criminal background check in exchange for walking away from condo issue. BST also asking GPSC for clarification on providing copies of security checks to AT&T.	BST	5/15/2001		
67	ATT 5, 2.2.4	Change Attachment number to 7 from 15	BST	5/15/2001	6/25/01	C
68	ATT 5, 4.1	Remove "a" before AT&T in first sentence	BST	5/15/2001	6/25/01	C
69	ATT 6, 1.2.2	Middle of paragraph-should read per use or per unit of vertical services..... OK AS IS	BST	5/15/2001	6/19/2001	Leave as is. Completed.
70	ATT 6, 1.2.3	Bill Date info - use MS language here	BST	5/15/2001	6/19/2001	Completed
70A	ATT 6, 1.6.1	Remove reference to Section	BST	6/19/2001	6/25/01	C
71	ATT 6, 1.11.3	Test tape - Roberta sent Michael 4/28 language for review	BST	5/15/2001	6/19/2001	Language OK. Completed.
71A	ATT6, 1.17.2.1	End sentence after or service	BST	6/19/2001	6/25/01	C
72	ATT 6, 1.17.2-5	Roberta sent Michael 4/28 language for review	BST	5/15/2001	6/19/2001	Language OK. Completed.
73	ATT 6, 1.19.1	Remove reference to 800 in GA ICA, NC Completed	BST	6/19/2001	6/19/2001	Cannot block 800 or 700
74	ATT 6, 3.2	Space between 3.2 & 3.3	BST	5/15/2001	6/25/01	C
75	ATT 6, EXH E	Missing from file sent by BST. BST to review ADUF and ODUF rates for all states other than LA based on incorrect forecasts.	BST	5/15/2001		6/19-BST to reference these are interim subject to cost filing they have filed.
76	ATT 6	Roxanne sharing BST security deposit language with	AT&T	5/15/2001	6/19/2001	Incorporated as 1.1.7

NORTH CAROLINA ICA
OUTSTANDING ISSUES

		Dagger. Will provide feedback to BST.				
77	ATT 7, Contents	Remove 11 from Table of Contents	BST	6/19/2001		
78	ATT 7, 1.1	Split into two paragraphs at bolded language	BST	5/15/2001	6/19/2001	Completed
79	ATT 7, 1.6	Remove reference to attached exhibit	BST	6/19/2001	6/25/01	C
79A	ATT 7, 3.5	End sentence at Internet website	BST	6/19/2001	6/25/01	C
79B	ATT 7, 3.7	Remove exhibit A and replace with section 3.9	BST	6/19/2001		
79C	ATT 7, 3.20	AT&T to confirm with Jay B. ok to mv to ATT 2	AT&T	6/19/2001		6/22 Jay OK w/ mmg
80	ATT 7, 4.2.1	Leave as disagree until PSC decision on BST objections	BST	5/15/2001	6/19/2001	AT&T OK w/BST Language MR3 we OK
81	ATT 7, 4.7	Will adopt BST proposed language of 5/8 changing when possible to best efforts. Leah confirming OK w/lang	BST	5/15/2001	6/19/2001	Completed
82	ATT 7, 6	Remove all of section 6 - JIA	BST	5/15/2001	6/19/2001	Completed
83	ATT 7, Exhibit A	Remove Exhibit A and all references to it	BST/ATT	6/19/2001	6/25/01	C
84	ATT 8, Contents	Remove reference to Exhibit C	BST	5/15/2001	6/19/2001	Completed
85	ATT 10, 1.11	Space between this Attachment in last sentence	BST	5/15/2001	6/19/2001	Completed
86	ATT 13 and 14	Not included in files sent by BST	BST	5/15/2001	6/19/2001	No 14, 13 will be in Completed.

Where is it in ATT 2?

ATTACHMENT 3

LOCAL INTERCONNECTION

DISAGREE:

5.3.1.1
5.3.1.7

OPEN-AT&T

1.2
1.5
1.7
1.8
1.9 – 1.11
2.2.2
2.7
3.2 – 3.5
3.6.7
3.18.1.1
4.13.5.3
5.2
5.3.1.1
5.3.3
5.3.3.1
6

OPEN-BST

1.2
1.4.3
1.4.4
1.5
1.7
1.8
1.9 – 1.11
2.2.2
3.2 – 3.5
3.6.6
3.6.7
3.7
3.8
3.9
4.14.1
5.3.2

TABLE OF CONTENTS

1. NETWORK INTERCONNECTION 33
2. METHODS OF INTERCONNECTION 55
3. INTERCONNECTION TRUNKING AND ROUTING 88
4. NETWORK DESIGN AND MANAGEMENT FOR INTERCONNECTIONERROR! BOOKMAR
5. NETWORK MAINTENANCE 1919

EXHIBIT A

EXHIBIT B

EXHIBIT C

EXHIBIT D

EXHIBIT E

EXHIBIT F

LOCAL INTERCONNECTION

OK **1. NETWORK INTERCONNECTION**

OK 1.1 The Parties shall provide interconnection with each other's network for the transmission and routing of telephone exchange service (local) and exchange access (intraLATA toll and switched access).

[redacted] BellSouth shall provide AT&T interconnection with BellSouth's network at any technically feasible point within BellSouth's network. including... (1.1.12 MIA)

not in 4/28 [redacted] AT&T shall provide interconnection to BellSouth at any mutually agreed upon point. (MIA 1.3)

[redacted] **[AT&T must establish, at a minimum, a single ~~Point of Presence, Point of Interface, and~~ Point of Interconnection with BellSouth within the LATA for the delivery of AT&T's originated local, intraLATA toll terminated to BellSouth and transit traffic terminated to other than BellSouth.][OPEN-BST/AT&T]** If AT&T chooses to interconnect at a single Point of Interconnection within a LATA, the interconnection must be at a BellSouth access or local tandem. Furthermore, AT&T must establish Points of Interconnection at all BellSouth access and local tandems where AT&T NXXs are "homed." A "Homing" arrangement is defined by a "Final" Trunk Group between the BellSouth access or local tandem and AT&T End Office switch. A "Final" Trunk Group is the last choice telecommunications path between the access or local tandem and End Office switch. It is AT&T's responsibility to enter its own NPA/NXX access and/or local tandem "homing" arrangements into the national Local Exchange Routing Guide ("LERG"). In order for AT&T to home its NPA/NXX(s) on a BellSouth access or local tandem, AT&T's NPA/NXX(s) must be assigned to an exchange rate center area served by that BellSouth access or local tandem and as specified by BellSouth.

OK 1.4 BST prop 4/28 AT&T tirewrite

~~interconnection trunk group instead of POP~~

OK 1.3 A Point of Presence is the physical location (a structure where the environmental, power, air conditioning, etc. specifications for a Party's terminating equipment can be met) at which a Party establishes itself for obtaining access to the other Party's network. The Point of Presence is the physical location within which the Point(s) of Interface occur.

1.5 4/28

OK 1.4 A Point of Interface is the physical telecommunications interface between BellSouth and AT&T's interconnection facilities. It establishes the technical interface and point of operational responsibility. The primary purpose of the Point of Interface is to serve

1.6 4/28

as the terminus for each Party's interconnection facilities. The Point of Interface has the following main characteristics:

OK 1.4.1 1.6.1 4/28 It is a cross-connect point to allow connection, disconnection, transfer or restoration of service.

OK 1.4.2 1.6.2 4/28 It is a point where BellSouth and AT&T can verify and maintain specific performance objectives.

OK 1.4.3 [It is specified according to the interfaces offered in this Attachment 3.] ~~[OPEN-BST]~~

OK ~~1.4.4 [The Parties provide their own equipment to interface with the equipment on the customer premises.] [OPEN-BST]~~

[redacted] **[The Point of Interconnection is the point at which the originating Party delivers its originated traffic to the terminating Party's first point of switching on the terminating Party's common (shared) network for call transport and termination. Points of Interconnection are available at either access tandems, local tandems, End Offices, or any other technically feasible point, as described in this Agreement. AT&T's requested Point of Interconnection will also be used for the receipt and delivery of transit traffic at BellSouth access and local tandems. Points of Interconnection established at the BellSouth local tandem apply only to AT&T-originated local and local originating and terminating transit traffic.] [OPEN-BST/AT&T]**

1.7 4/28 still up

does the earlier clarification eliminate the need for this language?

OK 1.6 1.8 4/28 The Parties will work cooperatively to establish the most efficient trunking network in accordance with the provisions set forth in this Attachment 3 and accepted industry practices.

[redacted] [Each party will be responsible for engineering its network (i.e., the underlying facilities on which trunks are provisioned) and providing any necessary equipment on its side of the Point of Interface.] AT&T, at its option, shall establish Points of Presence and Points of Interface for the delivery of its originated local and intraLATA toll traffic to BellSouth. The Point of Interface may not necessarily be established at the Point of Interconnection.] ~~[OPEN-BST/AT&T]~~

or causing to be provided

are we OK with new 1.9 4/28

[redacted] **[BellSouth shall designate the Points of Presence and Points of Interface for the delivery of its originated local and intraLATA toll traffic to AT&T for call transport and termination by AT&T.] [OPEN-BST/AT&T]**

delete

1.10 4/28 Disposition?

[redacted] 1.11 4/28 **[For the purposes of this Attachment 3, Local Channel is defined as a switch transport facility between a Party's Point of Presence and its designated serving wire center.[open AT&T]**

[redacted] 1.12 4/28 For the purposes of this Attachment 3, Serving Wire Center is defined as the wire center owned by one Party from which the other Party would normally obtain dial tone for its Point of Presence.

[redacted] 1.13 4/28 **For the purposes of this Attachment 3, Dedicated Transport is defined as a switch transport facility between a Party's designated serving wire center and the first point of switching on the other Party's common (shared) network.] [OPEN-~~BST/~~AT&T]**

OK **2. METHODS OF INTERCONNECTION**

OK 2.1 The Parties shall interconnect their networks utilizing one of the following methods in accordance with the provisions set forth in this Attachment 3. at our discretion

OK 2.2 2.1.1 4/28 Interconnection by one Party at the premises of the other Party.

OK 2.2.1 2.1.2 4/28 BellSouth shall provide collocation to AT&T pursuant to the terms set forth in Attachment 4 of this Agreement, incorporated herein by this reference. AT&T may, at its option, purchase such collocation at the rates, terms, and conditions set forth in Attachment 4 of this Agreement, incorporated herein by this reference.

only traffic covered by this agreement

[redacted] 2.1.3 4/28 **[AT&T, at its sole discretion, may permit BellSouth to utilize space and power in AT&T facilities specified by AT&T solely for the purpose of terminating BellSouth's local traffic. BellSouth may request installation of both cable and equipment, or cable only. The pricing, terms and conditions of such arrangement shall be pursuant to Exhibit [redacted] of this Attachment 3, incorporated herein by this reference.] [OPEN-BST/AT&T]**

interconnection traffic exclude exchange access traffic

OK 2.3 2.1.4 4/28 Leased Facilities – where the Party requesting interconnection utilizes the facilities offered by the other Party. Such leased facilities shall be provided at the rates, terms, and conditions set forth in this Attachment 3. At AT&T's request, it may lease separate facilities for the sole purpose of delivering undipped 8YY traffic from AT&T's end users to BellSouth's [redacted] ("SSP") for dipping into BellSouth's toll free database. \ Shld be service switching Party

OK 2.4 2.1.5 4/28 Third Party Facilities – where the Party requesting interconnection utilizes the facilities provided by a source other than the Parties to this Agreement. The Party utilizing this option shall comply with industry standards to maintain network integrity and will be solely responsible

for any charges or fees assessed by the third party for use of its facilities.

OK 2.5 4/28 2.1.6

Commercial Intra-building Interconnection – where both Parties have constructed broadband facilities into a commercial building (i.e., a building that is not a telephone central office) and agree to establish a Point of Interface at such location utilizing intra-building cable.

OK 2.6 4/28 2.1.7

"Fiber Meet" is an interconnection arrangement whereby the Parties physically interconnect their networks via an optical fiber interface (as opposed to an electrical interface), at which one Party's facilities, provisioning, and maintenance responsibility begins and the other Party's responsibility ends (i.e., Point of Interface). A Fiber Meet shall be an arrangement as set forth in Section 2.9 of this Attachment 3.

OK 2.7 4/28 2.1.8

Any other method determined to be technically feasible and requested by AT&T shall be done pursuant to the process defined in Attachment 10 of this Agreement, incorporated herein by this reference. Any other method determined to be technically feasible and requested by BellSouth and agreed to by AT&T shall be done. ~~pursuant to~~ [redacted] ~~[OPEN-AT&T]~~

Trunking arrangement [redacted] 4/28 2.2 OK AT&T

Trunks

Local Tandem Interconnection. This interconnection arrangement allows AT&T to establish a Point of Interconnection at BellSouth local tandems for: (1) the delivery of AT&T-originated local traffic transported and terminated by BellSouth to BellSouth end offices within the local calling area as defined in BellSouth's General Subscriber Services Tariff, Section A3 served by those BellSouth local tandems; and (2) for local transit traffic transported by BellSouth for third party network providers who have also established Points of Interconnection at those BellSouth local tandems.

[redacted]

OK 4/28 2.2.1 OK AT&T

When a specified local calling area is served by more than one BellSouth local tandem, AT&T must designate a "home" local tandem for each of its assigned NPA/NXXs and establish trunk connections to such local tandems. Additionally, AT&T may choose to establish a Point of Interconnection at the BellSouth local tandems where it has no codes homing but is not required to do so. AT&T may deliver local traffic to a "home" BellSouth local tandem that is destined for other BellSouth or third party network provider end offices subtending other BellSouth local tandems in the same local calling area where AT&T does not choose to establish a Point of Interconnection. It is AT&T's responsibility to enter its own NPA/NXX local tandem homing arrangements into the LERG either directly or via a vendor in order for other third party network providers to determine appropriate traffic routing to AT&T's codes. Likewise, AT&T shall obtain its routing information from the LERG.

3 MTA 4/28 OK

[redacted] 4/28 2.2.2 OK with saving inter trunk groups instead of 30's ??

Not withstanding establishing Points of Interconnection to BellSouth's local tandems, AT&T must also establish Points of Interconnection to BellSouth access tandems within the LATA on which AT&T has NPA/NXX's homed for the delivery of Interexchange Carrier Switched Access ("SWA") and toll traffic, and traffic to Type 2A CMRS connections located at the access tandems. BellSouth cannot switch SWA traffic through more than one BellSouth access tandem. SWA, Type 2A CMRS or toll traffic routed to the local tandem in error will not be backhauled to the BellSouth access tandem for completion. (Type 2A CMRS interconnection is defined in BellSouth's General Subscriber Services Tariff, Section A35.)

What does this mean

[redacted] 2.2.3 4/28 are we OK

OK

Bell-South shall pass transit traffic to other third party network providers subtending these local tandems. However, AT&T shall be responsible directly to that third party for all reciprocal compensation obligations.~~'s provisioning of local tandem interconnection assumes that AT&T has the necessary local interconnection arrangement with the other third party network providers subtending those local tandems as required by the Act.~~

OK **2.9** 2.3 4/28

Fiber Meet

[redacted] 2.3.1 4/28

If AT&T elects to establish a Point of Interconnection with BellSouth pursuant to a Fiber Meet, AT&T and BellSouth shall jointly engineer and operate a Synchronous Optical Network ("SONET") transmission system by which they shall interconnect their transmission and routing of local traffic via a Local Channel facility at either the DS0, DS1, or DS3 level and shall be ordered via an Access Services Request ("ASR") in the initial phase of this offering. The Parties shall work jointly to determine the specific transmission system. The parties will work cooperatively to establish joint access to transmission overhead signals and commands for such facilities and software. However, AT&T's SONET transmission must be compatible with BellSouth's equipment in the serving wire center. The Parties will work cooperatively in the selection of compatible transmission equipment and software. Fiber Meet will be used for the provision of two-way trunking unless otherwise agreed to by the Parties. ~~The system is bealloted~~ 1.6.1 MIA, Part 1 First sentence

OK 2.9.2 2.3.2 4/28

BellSouth shall, wholly at its own expense, procure, install and maintain the agreed upon SONET equipment in the BellSouth Serving Wire Center ("BSWC").

OK 2.9.3 2.3.3 4/28

AT&T shall, wholly at its own expense, procure, install and maintain the agreed upon SONET equipment in the AT&T Serving Wire Center ("ASWC").

OK 2.9.4 2.3.4 4/28

The parties shall mutually agree upon a Point of Interface outside of the BSWC as a Fiber Meet point and shall make all necessary preparations to receive and to allow and enable delivery of fiber optic facilities into the Point of Interface with sufficient spare length to reach the Point of Interface. A Common Language Location Identification ("CLLI") code will be established for each Point of Interface. The code established must be a building type code. All orders shall originate from the Point of Interface (i.e., Point of Interface to AT&T, Point of Interface to BellSouth).

OK 2.9.5 2.3.5 4/28

The Parties shall deliver and maintain their own strands wholly at their own expense. Upon verbal request by either Party, the other Party shall allow access to the Fiber Meet entry point for maintenance purposes as promptly as possible.

OK 2.9.6 2.3.6 4/28

The Parties shall jointly coordinate and undertake maintenance of the SONET transmission system. Each Party shall be responsible for maintaining the components of their own SONET transmission system.

OK 2.9.7 2.3.7 4/28

Each Party will be responsible for (i) providing its own transport facilities to the Fiber Meet, and (ii) the cost to build-out its facilities to such Fiber Meet.

OK 2.9.8 2.3.8 4/28

Neither Party shall charge the other for its portion of the Fiber Meet facility between the ASWC and the BSWC used exclusively for the other Party's local traffic (i.e., the Local Channel). The Parties do not intend to utilize this arrangement for transit traffic.

3.1 thru 3.2 in version 4/28 with DSL Dom 2b7

OK 3. **INTERCONNECTION TRUNKING AND ROUTING** → MIA, Part II C

OK 3.1 3.2 4/28

The Parties will convert all existing interconnection arrangements and trunks to the interconnection arrangements described in this Attachment in accordance with the following:

OK 3.2 3.2.1 4/28

[Within 45 days of ~~the Effective Date~~either Party's written request, the Parties will mutually develop an operations plan based on sound engineering and operations principles, which will specify the guidelines to convert from the existing interconnection arrangements to the interconnection arrangements described in this Attachment 3. Such guidelines will conform to standard industry practices adopted by and contained in documents published by Industry Forums, including but not limited to, the Alliance for Telecommunications Industry Solutions ("ATIS") and the Ordering and Billing Forum ("OBF").

OK 3.3 3.2.2 4/28

Each Party shall bear its own costs to convert from the existing interconnection arrangements to the interconnection arrangements described in this Attachment.

OK 3.4 3.2.3 4/28 Unless otherwise mutually agreed, the Parties will complete the conversion within one [1] year of the ~~Effective Date~~Requesting Party's written request ~~of the Agreement~~.

OK 3.5 3.2.4 4/28 If, following one [1] year after the ~~Effective Date of the Agreement~~Requesting Parth's written request, there exists any interconnection trunks which have not been converted to the interconnection arrangements described in this Attachment 3, then either Party may invoke the dispute resolution proceeding, pursuant to Section 16 of the General Terms and Conditions of this Agreement, incorporated herein by this reference. ~~[OPEN-BST/AT&T]~~

OK 3.6 3.3 4/28 The Parties will use the following interconnection standards:

OK 3.6.1 3.3.1 4/28 The Parties agree to establish Binary 8 Zero Sum Extended Superframe line protocol, where technically feasible.

OK 3.6.2 3.3.2 4/28 In those cases where either Party's equipment will not support 64K Clear Channel Capability ("CCC"), the Parties agree to establish AMI line coding. Any AMI line coding will be Superframe formatted. DS3 facilities will be provisioned with C-bit parity.

OK 3.6.3 3.3.3 4/28 Where additional equipment is required, such equipment shall be obtained, engineered, and installed to support 64K CCC trunks.

OK 3.6.4 3.3.4 4/28 All interconnection facilities between the Parties will be sized according to mutual forecasts developed per the requirements of Section 4.14 of this Attachment 3 and sound engineering practices.

OK 3.6.5 3.3.5 4/28 Interconnection will be provided utilizing either a DS1 or DS3 interface or, with the mutual agreement of the Parties, another technically feasible interface (e.g., STS-1).

[redacted] 3.3.6 4/28 BellSouth and AT&T shall establish interconnecting trunk groups and trunking configurations between networks including the establishment of one-way or two-way trunks in accordance with **[Exhibit [redacted] of this Attachment 3, attached hereto and incorporated herein by this reference.] [OPEN-BST to provide list]** 200 lang here - mk charges to 1 & 2 way slides

OK 3.6.7 3.3.7 4/28 ~~[~~All terms and conditions, as well as charges, both non-recurring and recurring, associated with interconnecting trunk groups between BellSouth and AT&T not addressed in Exhibit A shall be as set forth in the appropriate Party's intrastate or interstate tariff for switched access services. For two-way trunking that carries the Parties' local and intraLATA toll traffic, excluding transit traffic, the Parties shall be compensated for the nonrecurring and recurring charges for trunks and DS1 facilities at 50% of the applicable contractual or tariff rates for the services provided by each Party. AT&T shall be responsible for

ordering and paying for any two-way trunks carrying transit traffic.] ~~[OPEN-BST/AT&T]~~

OK ~~3.7[The Parties will work cooperatively to assure that reasonable diversity is achieved among the trunk groups between each Party's switches within each LATA.] [OPEN-BST]~~

OK [redacted] 3.4 4/28 **All originating toll free service calls for which the end office Party performs the SSP function, if delivered to the tandem Party, shall be delivered by the end office Party using GR-394 CORE format for IXC bound calls, or using GR-317-CORE format for LEC bound calls. [OPEN-BST]**

OK [redacted] 3.5 4/28 **[Originating Feature Group B calls delivered to either Party's tandem shall use GR-317-CORE signaling format unless the associated FGB carrier employs GR-394-CORE signaling for its FGB traffic at the serving access tandem.] [OPEN-BST]**

[redacted] 3.6 OK 4/28 The Parties shall deliver over any trunk groups groomed for a specific access tandem only traffic destined for those publicly-dialable NPA NXX codes served by: (1) end offices that directly subtend the access tandem; and (2) those providers (including, but not limited to CMRS providers, other independent LECs, and CLECs) that directly connect to the access tandem. Parties agree to route traffic pursuant to the LERG. 3.12 below.

[redacted] 3.7 OK 4/28 For BellSouth end offices that do not normally subtend tandem for which calls are routed to that end office on an alternate routing basis, BellSouth will provide AT&T its alternative routing (scheme) arrangements. Where BellSouth utilizes alternative arrangements, it shall deliver any traffic through that alternative routing.

OK ~~3.12~~3.11 3.8 4/28 The Parties shall deliver over any trunk groups groomed for a specific end office only traffic destined for those publicly-dialable NPA NXX codes served by that end office, unless otherwise agreed to by the Parties.

OK ~~3.13~~3.12 3.9 4/28 The source for the routing information for all traffic shall be the LERG unless otherwise agreed to between the Parties.

Say same thing

OK ~~3.14~~3.13 3.10 4/28 Where either Party delivers over the local traffic trunk groups miscellaneous calls (e.g., time, weather, 976) destined for the other Party, it shall deliver such traffic in accordance with the serving arrangements defined in the LERG.

OK ~~3.15~~3.14 3.11 4/28 The Parties will cooperate to establish separate, choke trunk groups for the completion of calls to customers such as radio contest lines. Notwithstanding the foregoing, the Parties agree that where the

Parties' switch has the capability to perform call gapping and other protective network traffic management controls, separate trunk groups shall not be required to carry such traffic.

OK ~~3.16~~3.15 3.12 4/28 N11 code traffic shall be routed between the Parties' networks pursuant to accepted industry practice (e.g., over local traffic trunks or over separate trunk groups).

OK ~~3.17~~3.16 3.13 4/28 Each Party shall establish procedures whereby its operator bureau will coordinate with the operator bureau of the other Party in order to provide Busy Line Verification/Busy Line Verification Interrupt ("BLV/BLVI") services on calls between their respective line side end users for numbers that are not ported.

OK ~~3.18~~3.17 3.14.1 4/28 A blocking standard of one-half of one percent (.005) shall be maintained during the average busy hour for final trunk groups carrying jointly provided exchange access traffic between an end office and an access tandem. All other final trunk groups are to be engineered with a blocking standard of one percent (.01). High usage trunk groups shall be sized to an economic CCS parameter mutually agreed to by both Parties.

OK 3.14.1 4/28 ~~AT&T rvw~~ [redacted] **BellSouth agrees to provide upon request of AT&T, pursuant to Section [redacted] of the General Terms and Conditions of this Agreement, traffic usage data (including, but not limited to, usage, peg and overflow counts) for each AT&T NXX subtending the BellSouth tandem to determine which AT&T traffic by NXX is being blocked. [OPEN-AT&T]**

OK ~~3.18.1.2~~3.17.1.2 3.14.2 4/28 Pursuant to Attachment 9, incorporated herein by this reference, BellSouth shall report to AT&T information regarding blocking of interconnection traffic.

OK ~~3.19~~3.18 3.15 4/28 The Parties agree to jointly manage the capacity of interconnection trunk groups to encourage the economic deployment of increasingly robust and diverse interconnection between their networks.

[redacted] 3.23 thru 3.29 open AT&T

OK 4. **NETWORK DESIGN AND MANAGEMENT FOR INTERCONNECTION**

4.1 OK Network Management and Changes. Both Parties will work cooperatively with each other to install and maintain the most effective and reliable interconnected telecommunications networks, including but not limited to, the exchange of toll-free maintenance contact numbers and escalation procedures. Both Parties agree to provide

We're OK if intent of BST was to delete lang. [illegible]

public notice of changes in the information necessary for the transmission and routing of services using its local exchange facilities or networks, as well as of any other changes that would affect the interoperability of those facilities and networks.

4.2 OK Interconnection Technical Standards. The interconnection of all networks will be based upon accepted industry/national guidelines for transmission standards and traffic blocking criteria. Interconnecting facilities shall conform, at a minimum, to the technical specifications set forth in the applicable industry standard technical references. Signal transfer point, Signaling System 7 ("SS7") connectivity is required at each interconnection point. BellSouth will provide out-of-band signaling using Common Channel Signaling Access Capability where technically and economically feasible, in accordance with the technical specifications set forth in the applicable industry standard technical references. Facilities of each Party shall provide the necessary on-hook, off-hook answer and disconnect supervision and shall hand off calling number ID (Calling Party Number) when technically feasible.

4.3 OK Quality of Interconnection. The local interconnection for the transmission and routing of telephone exchange service and exchange access that each Party provides to each other will be at least equal in quality to what it provides to itself and any subsidiary or affiliate, where technically feasible, or to any other Party to which each Party provides local interconnection.

4.4 OK Common Channel Signaling. Both Parties will provide LEC-to-LEC Common Channel Signaling ("CCS") to each other, where available, in conjunction with all traffic in order to enable full interoperability of CLASS features and functions except for call return. All CCS signaling parameters will be provided, including automatic number identification ("ANI"), originating line information ("OLI") calling company category, charge number, etc. All privacy indicators will be honored, and each Party will cooperate with each other on the exchange of Transactional Capabilities Application Part ("TCAP") messages to facilitate full interoperability of CCS-based features between the respective networks. The Parties will provide all line information signaling parameters including, but not limited to, Calling Party Number, Charge Number (if it is different from calling party number), and originating line information ("OLI"). For terminating FGD, either Party will pass any CPN it receives from other carriers. All privacy indicators will be honored. Where available, network signaling information such as Transit Network Selection ("TNS") parameter (SS7 environment) will be provided by the end office Party wherever such information is needed for call routing or billing. Where TNS information has not been provided by the end office Party, the tandem Party will route originating

exchange access traffic to the IXC using available translations. The Parties will follow all industry Ordering and Billing Forum ("OBF") adopted guidelines pertaining to TNS codes.

OK 4.4.1 BellSouth's Common Channel Signaling Access Service ("CCSAS") allows interconnected carriers to exchange signaling information over a communications path that is separate from the message path.

OK 4.4.2 The transport portion of CCSAS, commonly referred to as a signaling link, is provided via dedicated 56 kbps out of band signaling connections between the AT&T signaling point of interconnection and BellSouth's signaling point of interconnection ("SPOI").

OK 4.4.3 The network termination point where this interconnection takes place is called the Signaling Transfer Point ("STP") port termination.

OK 4.4.4 Charges for signaling links and the STP port termination can be found in Attachment 2 of this Agreement, incorporated herein by this reference.

OK 4.4.5 Each CCSAS signaling connection provides for two-way digital transmission at speeds in multiples of 56 kbps. The connection to BellSouth's STP pair can be made from either AT&T's signaling point ("SP"), which requires a minimum of two links, or from AT&T's STP pair, which requires a minimum of four links.

OK 4.5 4.4.6 4/28 SS7 Interconnection will take place at STP locations that are mutually agreed to by the Parties.

OK 4.6 4.4.7 4/28 Where CCS is not available, in-band multi-frequency signaling will be provided. In such an arrangement, each Party will outpulse the full ten-digit telephone number of the called party to the other Party with appropriate call set-up and Automatic Number Identification ("ANI") where available, at parity.

OK 4.7 4.4.8 4/28 The Parties will provide CCS to one another, where and as available, in conjunction with access to call related databases and Service Control Points ("SCP"), including toll free databases, Line Information Database ("LIDB"), Calling Name ("CNAM"), and any other necessary databases.

OK 4.8 4.4.9 4/28 When the Parties establish new links , each Party shall provide its own STP port termination(s) and charge the other Party for the signaling links as follows

OK 4.8.1 4.4.9.1 4/28 Where the SPOI for the signaling link is at a Fiber Meet, there shall be no compensation between the Parties for the signaling link facilities used.

[redacted] Where the SPOI for the signaling link facilities is located at the BellSouth Serving Wire Center where the signaling link facilities terminates and AT&T has furnished the interconnection facility, BellSouth will pay a monthly charge equal to one half of the AT&T-provided facility charge according to BellSouth's unbundled rate element for the facility used. Rates for said interconnection facilities shall be as set forth in Exhi[redacted] Attachment 2, incorporated herein by this reference.

4.4.9.2 4/28

[redacted] Where the SPOI for the signaling link facilities is located at the AT&T Serving Wire Center facility where the signaling link facilities terminate and BellSouth has furnished the interconnection facility, AT&T will pay a monthly charge equal to one half of the BellSouth-provided facility charge according to BellSouth's unbundled rate element for the facility used. Rates for said interconnection facilities shall be as set forth in Exhi[redacted] in Attachment 2, incorporated herein by this reference.

4.4.9.3 4/28

OK 4.8.4 Each party is responsible for all facility maintenance and provisioning on its side of the SPOI.

4.4.9.4 4/28

OK 4.9 Implementation of new interconnection arrangements (as opposed to augmentation of existing arrangements), including testing of SS7 interconnection, shall be pursuant to the technical specifications set forth in the applicable industry standard technical references. Each Party will be expected to provide sufficient cooperative testing resources to ensure proper provisioning, including the ability to confirm that AT&T LERG-assigned NPA NXX codes have been opened, translated and routed accurately in all appropriate BellSouth switches. A mutually agreed test calling plan shall be conducted to ensure successful completion of originating and terminating calls.

4.4.10 4/28

OK 4.10 <u>Message Screening</u>

4.5 4/28

OK 4.10.1 BellSouth shall set message screening parameters so as to accept messages from AT&T local or tandem switching systems destined to any signaling point in the BellSouth SS7 network or any network interconnected to the BellSouth SS7 network with which the AT&T switching system has a legitimate signaling relationship.

4.5.1 4/28

OK 4.10.2 BellSouth shall set message screening parameters so as to accept messages destined to/from an AT&T local or tandem switching system or to/from an AT&T Service Control Point ("SCP") from any signaling point or network interconnected to the BellSouth SS7 network with which the AT&T switching system has a legitimate signaling relationship.

4.5.2 4/28

OK 4.11 <u>STP Requirements</u>

4.6 4/28

OK 4.11.1 4.6.1 4/28 BellSouth shall provide message transfer part and Signaling Connection Control Point ("SCCP") protocol interfaces in accordance with the technical specifications set forth in the applicable industry standard technical references.

OK 4.12 4.7 4/28 <u>SS7 Network Interconnection</u>

OK 4.12.1 4.7.1 4/28 SS7 Network Interconnection is the interconnection of AT&T STPs and AT&T local or tandem switching systems with the BellSouth STPs. This interconnection provides connectivity that enables the exchange of SS7 messages among BellSouth switching systems and databases, AT&T local or tandem switching systems and other third-party switching systems directly connected to the BellSouth SS7 network.

OK 4.12.2 4.7.2 4/28 SS7 Network Interconnection shall provide connectivity to all components of the BellSouth SS7 network. These include:

OK 4.12.2.1 4.7.2.1 4/28 BellSouth local or tandem switching systems;

OK 4.12.2.2 4.7.2.2. 4/28 BellSouth databases; and

OK 4.12.2.3 4/28 Other third-party local or tandem switching systems.

OK 4.12.3 4/28 The connectivity provided by SS7 Network Interconnection shall fully support the functions of BellSouth switching systems and databases and AT&T or other third-party switching systems with [note could be A or D/B link] direct access to the BellSouth SS7 network.

OK 4.12.4 4/28 SS7 Network Interconnection shall provide transport for certain types of TCAP messages. If traffic is routed based on dialed or translated digits between an AT&T local switching system and a BellSouth or other third-party local switching system, either directly or via a BellSouth tandem switching system, then it is a requirement that the BellSouth SS7 network convey via SS7 Network Interconnection the TCAP messages that are necessary to provide Call Management services (Automatic Callback, Automatic Recall, and Screening List Editing) between the AT&T local STPs and the BellSouth or other third-party local switch.

OK 4.12.5 4/28 When the capability to route messages based on Intermediate Signaling Network Identifier ("ISNI") is generally available on BellSouth STPs, the BellSouth SS7 Network shall also convey TCAP messages using SS7 Network Interconnection in similar circumstances where the BellSouth switch routes traffic based on a Carrier Identification Code ("CIC").

OK 4.~~12~~7.6 4/28 BellSouth shall offer the following SS7 Network Interconnection options to connect AT&T or AT&T-designated local or tandem switching systems or STPs to the BellSouth SS7 network:

OK 4.~~12~~7.6.1 4/28 A-link interface from AT&T local or tandem switching systems; and

OK 4.~~12~~7.6.2 4/28 D/B-link interface from AT&T STPs.

OK 4.~~12~~7.7 4/28 Each interface shall be provided by one or more sets (layers) of signaling links, as follows:

OK 4.~~12~~7.7.1 4/28 An A-link layer shall consist of two links.

OK 4.~~12~~7.7.2 4/28 A D/B-link layer shall consist of four links.

OK 4.~~12~~7.8 4/28 The Parties agree to implement intraoffice diversity for the signaling links so that no single failure of intraoffice facilities or equipment shall cause the failure of any two links in a layer connecting to a BellSouth STP.

OK **4.12.9** 4.7.9 4/28 <u>Signaling Call Information. BellSouth and AT&T will send and receive 10 digits for local traffic. Additionally, BellSouth and AT&T will exchange the proper call information, i.e., originated call company number and destination call company number, CIC, and OZZ, including all proper translations for routing between networks and any information necessary for billing.</u>

OK 4.~~13~~8 4/28 <u>Trunk Forecasting and Servicing Requirements</u>.

OK 4.~~12~~8.1 4/28 The Parties shall exchange technical descriptions and forecasts of their interconnection and traffic requirements in sufficient detail necessary to establish the interconnections required to assure traffic completion to and from all customers in their respective designated service areas. In order for BellSouth to provide as accurate reciprocal trunking forecasts as possible to AT&T, AT&T must timely inform BellSouth of any known or anticipated events that may affect BellSouth reciprocal trunking requirements. If AT&T refuses to provide such information, BellSouth shall provide reciprocal trunking forecasts based only on existing trunk group growth and BellSouth's annual estimated percentage of BellSouth subscriber line growth.

OK 4.~~13~~8.1 4.8.2 4/28 Both Parties shall meet every six months or at otherwise mutually agreeable intervals for the purpose of exchanging non-binding forecast of its traffic and volume requirements for the interconnection and network elements provided under this Agreement, in the form and in such detail as agreed by the Parties. The Parties agree that each forecast provided under this section shall be deemed "Confidential

Information" as set forth in Section 18 of the General Terms and Conditions of this Agreement, incorporated herein by this reference.

OK 4.13.2 The trunk forecast should include trunk requirements for all of the interconnecting trunk groups for the current year plus the next two future years. The forecast meeting between the two companies may be a face-to-face meeting, video conference or audio conference. It may be held regionally or geographically. Ideally, these forecast meetings should be held at least semi-annually, or more often if the forecast is no longer usable. Updates to a forecast or portions thereof should be made whenever the Party providing the forecast deems that the latest trunk requirements exceed the original quantities by 48 trunks or 10%, whichever is greater. Either Party should notify the other Party if they have measurements indicating that a trunk group is exceeding its designed call carrying capacity and is impacting other trunk groups in the network. Also, either Party should notify the other Party if they know of situations in which the traffic load is expected to increase significantly and thus affect the interconnecting trunk requirements as well as the trunk requirements within the other Party's network. The Parties agree that the forecast information provided under this section shall be deemed "Confidential Information" as set forth in Section 18 of the General Terms and Conditions of this Agreement, incorporated herein by this reference. Each Party shall provide a specified point of contact for planning, forecasting and trunk servicing purposes.

4.8.3 4/28

OK 4.13.3 For a non-binding trunk forecast, agreement between the two Parties on the trunk quantities and the timeframe of those trunks does not imply any liability for failure to perform if the trunks are not available for use at the required time.

4.8.4 4/28

4.13.4~~Signaling Call Information. BellSouth and AT&T will send and receive 10 digits for local traffic. Additionally, BellSouth and AT&T will exchange the proper call information, i.e., originated call company number and destination call company number, CIC, and OZZ, including all proper translations for routing between networks and any information necessary for billing.~~

OK

OK ~~4.13.5~~4.13.4 Both Parties will manage the capacity of their interconnection trunk groups. BellSouth will issue an ASR to AT&T to order changes BellSouth desires to the BellSouth interconnection trunk groups based on BellSouth's capacity assessment. AT&T will issue an ASR to BellSouthBellSouth to order changes AT&T desires to the AT&T interconnection trunk groups based on AT&T's capacity assessment.

4.8.5 4/28

OK ~~4.13.5.1~~4.13.4.1 Either Party may issue a Trunk Group Service Request ("TGSR") to the other Party to order changes it desires to the

4.8.6 4/28

interconnection trunk groups based on its capacity assessment. The Party receiving the TGSR will, within ten (10) business days, respond with an ASR or an explanation of why it believes an ASR is inappropriate.

OK ~~4.13.5.2~~4.13.4.2 The Party submitting an ASR will provide complete and accurate tie down inventory assignments in typical industry bay, panel and jack format, or in such other format as the Parties agree, on each order by use of a Design Layout Record. Additional tie down information, such as span information, may be required when applicable.
4.8.7 4/28

OK ~~4.13.5.3~~4.13.4.3 The Parties will prepare ASRs pursuant to the industry standard guidelines of the OBF. [When submitting an ASR, BellSouth will identify AT&T's end office in the SEC LOC field of the ASR form.] ~~[OPEN-AT&T]~~
4.8.8 4/28

OK ~~4.13.5.4~~4.13.4.4 The Party provisioning the ASR will assign to the requesting Party a location code expressed in CLLI code format that will appear in the Access Customer Terminal Location Field of the ASR.
4.8.9 4/28

OK ~~4.13.6~~4.13.5 The standard interval used for the provisioning of additions to local interconnection trunk groups shall be no greater than ten (10) business days, for orders of fewer than ninety-six (96) DS-0 trunks. Other orders shall be determined on an individual case basis. Where feasible, either Party will expedite installation, upon the other Party's request.
4.8.10 4/28

OK ~~4.13.7~~4.13.6 Major projects shall be limited to those projects that require the coordination and execution of multiple orders or related activities between and among BellSouth and AT&T work groups specifically relating to: (i) the initial establishment of local interconnection trunk groups; (ii) extending service into a new area; (iii) NXX code moves; (iv) facility grooming; or (v) network rearrangements. If orders that are component pieces of a major project are submitted after project implementation has been jointly planned and coordinated, they shall be submitted with a major project reference. Several orders submitted at one time may not be classified as a major project without the consent of the submitting Party. Each Party will identify a single point of contact that will be responsible for overall coordination and management of a major project through an agreed completion point.
4.8.11 4/28

OK ~~4.13.8~~4.13.7 As provided herein, AT&T and BellSouth agree to exchange escalation lists which reflect contact personnel including vice president level officers. These lists shall include name, department, title, phone number, and fax number for each person. AT&T and BellSouth agree
4.8.12 4/28

to exchange an up-to-date list promptly following changes in personnel or information.

OK 4.~~14~~.9 4/28 Interference or Impairment

OK 4.14.1 4.10 4/28 [Within three (3) business days of receipt of notification of blocking of traffic originated within the other Party's network, the Parties shall determine and begin work to implement reasonable corrective measures in a manner consistent with industry practices.] ~~[OPEN-BST]~~

OK 4.15 4.11 4/28 Local Dialing Parity

OK 4.15.1 4.11.1 4/28 BellSouth and AT&T shall provide local and toll dialing parity to each other with no unreasonable dialing delays. Dialing parity shall be provided for all originating telecommunications services that require dialing to route a call. BellSouth and AT&T shall permit similarly situated telephone exchange service end users to dial the same number of digits to make a local telephone call notwithstanding the identity of the end user's or the called party's telecommunications service provider.

OK **5. NETWORK MAINTENANCE**

OK 5.1 Outage Repair Standard

OK 5.1.1 In the event of an outage or trouble in any arrangement, facility, or service being provided by BellSouth hereunder, BellSouth will follow procedures for isolating and clearing the outage or trouble that are no less favorable than those that apply to comparable arrangements, facilities, or services being provided by BellSouth to itself, Affiliate or any other carrier whose network is connected to that of BellSouth.

[redacted] **[BellSouth shall provide AT&T at least sixty (60) days' advance notice of any scheduled maintenance activity which may impact AT&T's end users. Scheduled maintenance shall include, without limitation, such activities as, switch software retrofits, power tests, major equipment replacements and cable rolls. Plans for scheduled maintenance shall include, at a minimum, the following information: location and type of facilities, specific work to be performed, date and time work is scheduled to commence, work schedule to be followed, date and time work is scheduled to be completed, estimated number of work-hours for completion.] [OPEN-AT&T]**

Close Pm 5/16 mtg.

OK **5.3 Interconnection Compensation**

6 4/28

Use FLL order

OK 5.3.1 6.1 4/28 Compensation for Local Traffic

[redacted]

6.1.1 4/28

Issue for Bill & Dave

[redacted]

For reciprocal compensation between the Parties pursuant to this Attachment, Local Traffic is defined as ~~means~~ any telephone call that originates and terminates in the same LATA except for those calls that are originated or terminated through switched access arrangements as established by the ruling regulatory body~~and is billed by the originating Party as a local call~~ [when the originating Party has its own switch]. [OPEN-AT&T] Therefore, when an AT&T end user originates traffic and AT&T sends it to BellSouth for termination, AT&T will determine whether the traffic is local or intraLATA toll. When a BellSouth end user originates traffic and BellSouth sends it to AT&T for termination, BellSouth will determine whether the traffic is local or intraLATA toll. Each Party will provide the other with information that will allow it to distinguish local from intraLATA toll traffic. At a minimum, each Party shall utilize NXX's in such a way that the other Party shall be able to distinguish local from intraLATA toll traffic. The NPA's/NXX of the orig + term end user shall be the ~~shall~~ sole basis for distinguishing local from intraLATA toll traffic

Do we need this language?

Local + toll calls will be determ by exchange (NPA) of party

DISAGREE

[redacted]

AT&T PROPOSAL: As clarification of this definition and for reciprocal compensation, Local Traffic does include traffic that originates from or terminates to or through an enhanced service provider or information service provider.

BST PROPOSAL: As clarification of this definition and for reciprocal compensation, Local Traffic does not include traffic that originates from or is directed to or through an enhanced service provider or information service provider.

6.1.3 New lang 4/28

The Parties recognize and agree that the compensation for the transport and termination of Local Traffic are intended to allow each Party to recover costs associated with such traffic. The Parties recognize and agree that such compensation will not be billed and shall not be paid for calls where a Party sets up a call, or colludes with a third party to set up a call, to the other Party's network for the purpose of receiving reciprocal compensation, and not for the purposes of providing a telecommunications service to an end user.~~As further clarification, Local Traffic does not include traffic that consists of minutes of use from any end user customer that relies upon a call placed by that end user customer or on the end user customer's behalf to establish or maintain a network connection, if: (a) minutes of use to be billed are primarily associated with traffic of a type not routinely and ordinarily recognized by a reasonable person to constitute traffic as a result of a telephone~~

OK

~~call (i.e., voice or data traffic); (b) the end user customer does not control the destination of the call; and (c) the minutes of use do not serve a legitimate purpose that is unrelated to the receipt of reciprocal compensation or any other benefit that may be derived solely from establishing or maintaining the network connection.~~

[redacted] 4/28

The Parties shall provide for the mutual and reciprocal recovery of the costs for the network facilities utilized in transporting and terminating local traffic on each other's network. The Parties agree that charges for transport and termination of calls on their respective networks are as set forth in Exhibit A to this Attachment.

OK 5.3.1.3 6.1.5 4/28

For the purposes of this Attachment 3, Common (Shared) Transport is defined as the transport of one Party's traffic by the other Party over the other Party's common (shared) facilities between the other Party's tandem switch and end office switch and/or between the other Party's tandem switches.

OK 5.3.1.4 6.1.6 4/28

For the purposes of this Attachment 3, Tandem Switching is defined as the function that establishes a communications path between two switching offices through a third switching office (the Tandem switch).

OK 5.3.1.5 6.1.7 4/28

For the purposes of this Attachment 3, End Office Switching is defined as the function that establishes a communications path between the trunk side and line side of the End Office switch.

[redacted]

In the event that AT&T elects to offer service within a LATA using a switch located in another LATA, AT&T agrees to provide the transport for both Parties' traffic between the remote AT&T switch and a point (i.e., a facility point of presence) within the LATA in which AT&T offers service. Such facility point of presence shall be deemed to be an AT&T Switch ~~Center~~ for the purposes of this Attachment.~~If AT&T utilizes a switch outside the LATA and BellSouth chooses to purchase dedicated or common (shared) transport from AT&T for transport and termination of BellSouth originated traffic, BellSouth will pay AT&T no more than the airline miles between the V & H coordinates of the Point of Interface within the LATA where AT&T receives the BellSouth originated traffic and the V & H coordinates of the BellSouth Exchange Rate Center Area that the AT&T terminating NPA/NXX is associated in the same LATA. For these situations, BellSouth will compensate AT&T at either dedicated or common (shared) transport rates specified in Exhibit A and based upon the network facilities provided by AT&T as defined in this Attachment 3.~~

This is a language from Parts Bth.

OK

RMV Cont

[redacted] **DISAGREE**

6.1.9 4/28

AT&T PROPOSAL: ~~Neither Party shall represent access services traffic (e.g., Internet Protocol Telephony, FGA, FGB, etc.) as Local Traffic for purposes of payment of reciprocal compensation. "Internet Protocol Telephony" is defined as real-time voice conversations over the Internet by converting voices into data which is compressed and split into packets, which are sent over the Internet like any other packets and reassembled as audio output at the receiving end.~~

BST PROPOSAL: Neither Party shall represent access services traffic (e.g., Internet Protocol Telephony, FGA, FGB, etc.) as Local Traffic for purposes of payment of reciprocal compensation. "Internet Protocol Telephony" is defined as real-time voice conversations over the Internet by converting voices into data which is compressed and split into packets, which are sent over the Internet like any other packets and reassembled as audio output at the receiving end.

~~5.3.2~~

[Unidentifiable traffic. AT&T shall utilize its NPA/NXXs in such a way and will provide the necessary information so that BellSouth shall be able to distinguish local from intraLATA toll traffic for BellSouth originated traffic. AT&T end users assigned NPA/NXX line numbers shall be physically located in the BellSouth rate center with which the NPA/NXX has been associated. Whenever BellSouth delivers traffic to AT&T for termination on the AT&T's network, if BellSouth cannot determine, because of the manner in which AT&T has utilized its NXX codes whether the traffic is local or toll, BellSouth will charge the applicable rates for originating intrastate network access service as reflected in BellSouth's Intrastate Access Services Tariff. BellSouth will make appropriate billing adjustments if AT&T can provide sufficient information for BellSouth to determine whether said traffic is local or toll.] [OPEN-BST]

5.3.3 Percent Local Use. Each Party will report to the other a Percentage Local Usage ("PLU"). The application of the PLU will determine the amount of local minutes to be billed to the other Party. For purposes of developing the PLU, each Party shall consider every local call and every long distance call, excluding intermediary traffic. BellSouth shall report quarterly PLU factors to AT&T. BellSouth will accept from AT&T monthly PLU factors provided under the previous agreement until the third quarter of 2001, at which time AT&T shall report quarterly PLU factors. ~~[By the first of January, April, July and October of each year,~~ BellSouth and AT&T shall also provide a positive report updating the PLU. Detailed requirements associated with PLU reporting shall be as set forth in BellSouth's Standard Percent Local

Use Reporting Platform for Interconnection Purchasers, as it is amended from time to time during this Agreement.~~] [OPEN-AT&T]~~ Notwithstanding the foregoing, where the terminating company has message recording technology that identifies the traffic terminated, such information, in lieu of the PLU factor, shall at the company's option be utilized to determine the appropriate reciprocal compensation to be paid.

~~5.3.3.1[Notwithstanding the reporting interval set forth in Section 5.3.3, BellSouth will accept and implement a monthly PLU, for a period of twelve (12) months, whenever AT&T gains an end user whose calling pattern and traffic would likely have an impact on the PLU reported by AT&T or whenever AT&T opens a new calling area or begins marketing local services in a new area. After reporting the PLU monthly for a twelve (12) month period, the PLU reporting will revert to quarterly. Unless the monthly reporting demonstrates that the PLU has stabilized, then the reporting party will continue to report a monthly PLU for an additional six (6) month period or until the Parties agree that the PLU has stabilized, whichever occurs first. In all other instances, the PLU reporting shall be quarterly.] [OPEN-AT&T]~~

OK

5.3.4 Percent Local Facility. Each Party shall report to the other a Percent Local Facility ("PLF"). The application of the PLF will determine the portion of switched dedicated transport to be billed per the local jurisdiction rates. The PLF shall be applied to multiplexing, local channel and interoffice channel switched dedicated transport utilized in the provision of local interconnection trunks. Each Party shall update its PLF on the first of January, April, July and October of the year and shall send it to the other Party to be received no later than 30 calendar days after the first of each such month to be effective the first bill period the following month, respectively. Requirements associated with PLU and PLF calculation and reporting shall be as set forth in BellSouth's Percent Local Use/Percent Local Facility Reporting Guidebook, as it is amended from time to time.

OK from M

OK 6/1/12 4/28

~~5.3.4~~5.3.5 Percentage Interstate Usage. For combined interstate and intrastate AT&T traffic terminated by BellSouth over the same facilities, AT&T will be required to provide a projected Percentage Interstate Usage ("PIU") to BellSouth. All jurisdictional report requirements, rules and regulations for Interexchange Carriers specified in BellSouth's Intrastate Access Services Tariff will apply to AT&T. After interstate and intrastate traffic percentages have been determined by use of PIU procedures, the PLU factor will be used for application and billing of local interconnection. Notwithstanding the foregoing, where the

5/22/01

terminating company has message recording technology that identifies the traffic terminated, such information, in lieu of the PLU factor, shall at the company's option be utilized to determine the appropriate reciprocal compensation to be paid.

~~5.3.5~~5.3.6 Audits. On thirty (30) days' written notice, each Party must provide the other the ability and opportunity to conduct an annual audit of the traffic reported. BellSouth and AT&T shall retain records of call detail for a minimum of nine months from which a PLU and/or PIU can be ascertained. The audit shall be accomplished during normal business hours at an office designated by the Party being audited. Audit requests shall not be submitted more frequently than one (1) time per calendar year. Audits shall be performed by a mutually acceptable independent auditor paid for by the Party requesting the audit. The PLU and/or PIU shall be adjusted based upon the audit results and shall apply to the usage for the quarter the audit was completed, to the usage for the quarter prior to the completion of the audit, and to the usage for the two quarters following the completion of the audit. If, as a result of an audit, either Party is found to have overstated the PLU and/or PIU by twenty percentage points (20%) or more, that Party shall reimburse the auditing Party for the cost of the audit.

OK 6.1.13 4/28

5.4 Compensation for IntraLATA Toll Traffic

5.4.1 IntraLATA Toll Traffic. IntraLATA Toll Traffic is defined as any telephone call that originates and terminates in the same LATA and is billed by the originating Party as a toll call.

5.4.2 Compensation for IntraLATA Toll Traffic. For terminating its IntraLATA Toll Traffic on the other Party's network, the originating Party will pay the terminating Party's intrastate or interstate terminating switched access tariff rates as set forth in the effective intrastate or interstate access services tariff, whichever is appropriate. The appropriate charges will be determined by the routing of the call. If BellSouth or AT&T is the other Party's end user's presubscribed interexchange carrier or if an end user uses BellSouth or AT&T as an interexchange carrier on a 101XXXX basis, BellSouth or AT&T will charge the other Party the appropriate tariff charges for originating switched access services.

OK 5.4.3 Compensation for 800 Traffic. Each Party shall compensate the other pursuant to the appropriate switched access charges, including the database query charge as set forth in the each Party's intrastate or interstate switched access tariffs.

6.1.14 4/28

OK 5.4.4 Records for 8YY Billing. Each Party will provide to the other the appropriate records necessary for billing intraLATA 8YY customers.

6.1.15 4/28

Records required for billing end users purchasing 8YY Services shall be provided pursuant to Attachment 6 of this Agreement, incorporated herein by this reference.

Transit Traffic Service. BellSouth shall provide tandem switching and transport services for AT&T's transit traffic. Transit traffic is traffic originating on AT&T's network that is switched and/or transported by BellSouth and delivered to a third party's network, or traffic originating on a third Party's network that is switched and/or transported by BellSouth and delivered to AT&T's network . Rates for local transit traffic shall be the applicable call transport and termination charges as set forth in Exhibit A to this Attachment. Rates for intraLATA toll and Switched Access transit traffic shall be the applicable call transport and termination charges as set forth in BellSouth Interstate or Intrastate Switched Access tariffs. Switched Access transit traffic presumes that AT&T's end office is subtending the BellSouth Access Tandem for switched access traffic to and from AT&T's end users utilizing BellSouth facilities, either by direct trunks with the IXC, or via the BellSouth Access Tandem. Billing associated with all transit traffic shall be pursuant to MECAB procedures. Wireless Type 1 traffic shall not be treated as transit traffic from a routing or billing perspective. Wireless Type 2A traffic shall not be treated as transit traffic from a routing or billing perspective until BellSouth and the Wireless carrier have the capability to properly meet-point-bill in accordance with Multiple Exchange Carrier Access Billing ("MECAB") guidelines.

[OSS Rates – To the extend AT&T orders a Service and Element for the purpose of interconnection, the OSS Rates set forth in Exhibit __ of Attachment 2, incorporated herein by this reference, shall apply.] [OPEN-AT&T]

Exhibit B

Basic Architecture

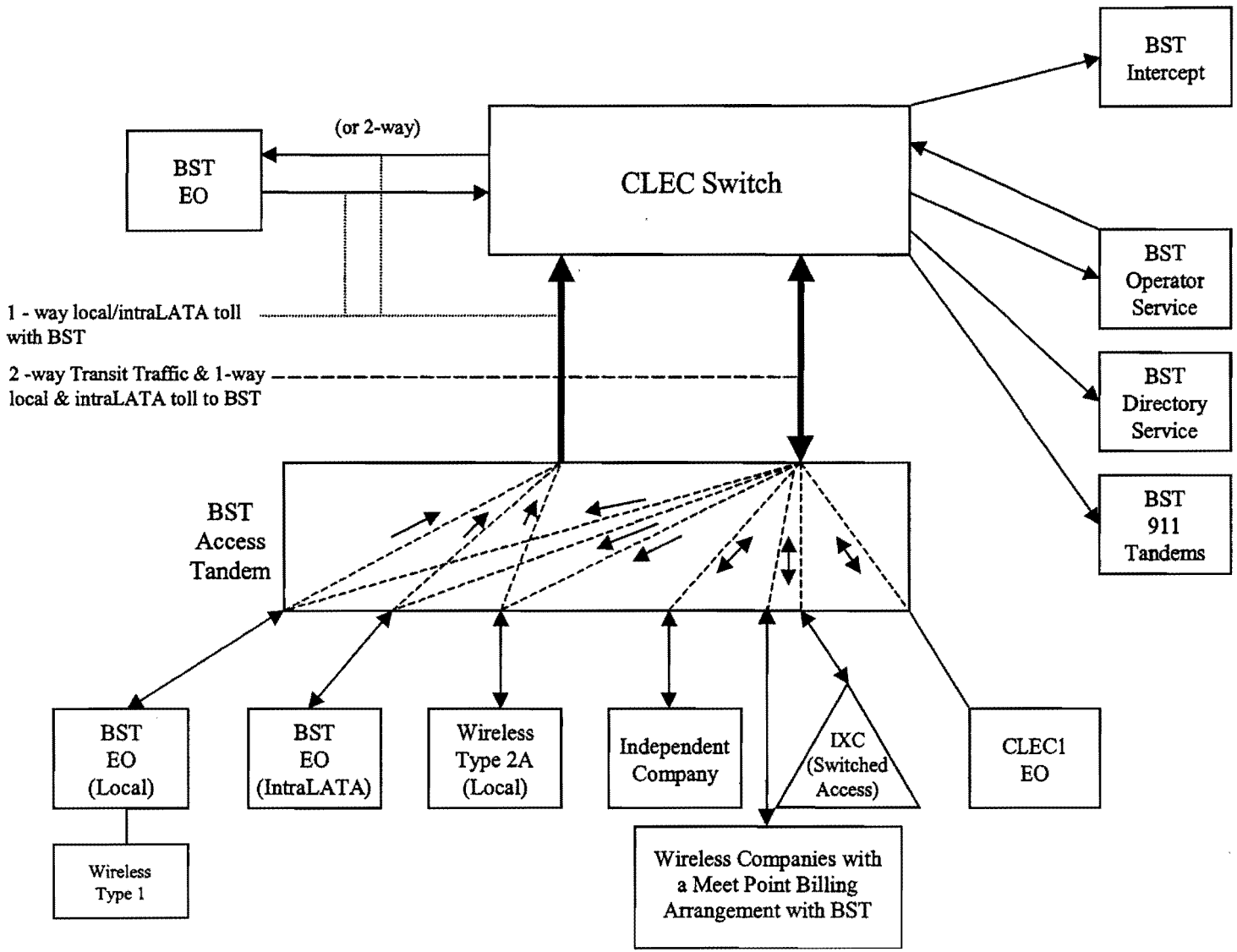

Exhibit C

One-Way Architecture

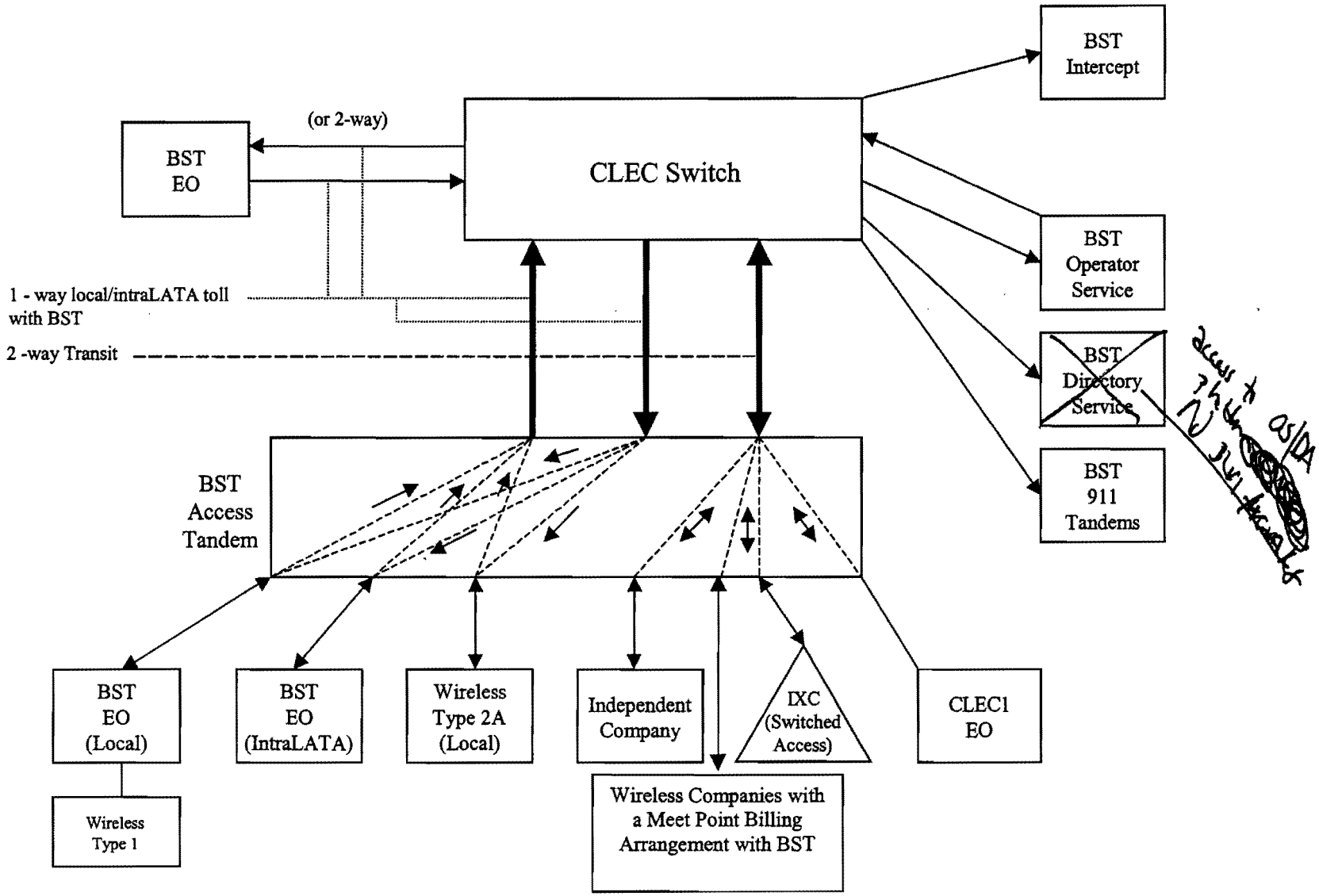

Exhibit D

Two-Way Architecture

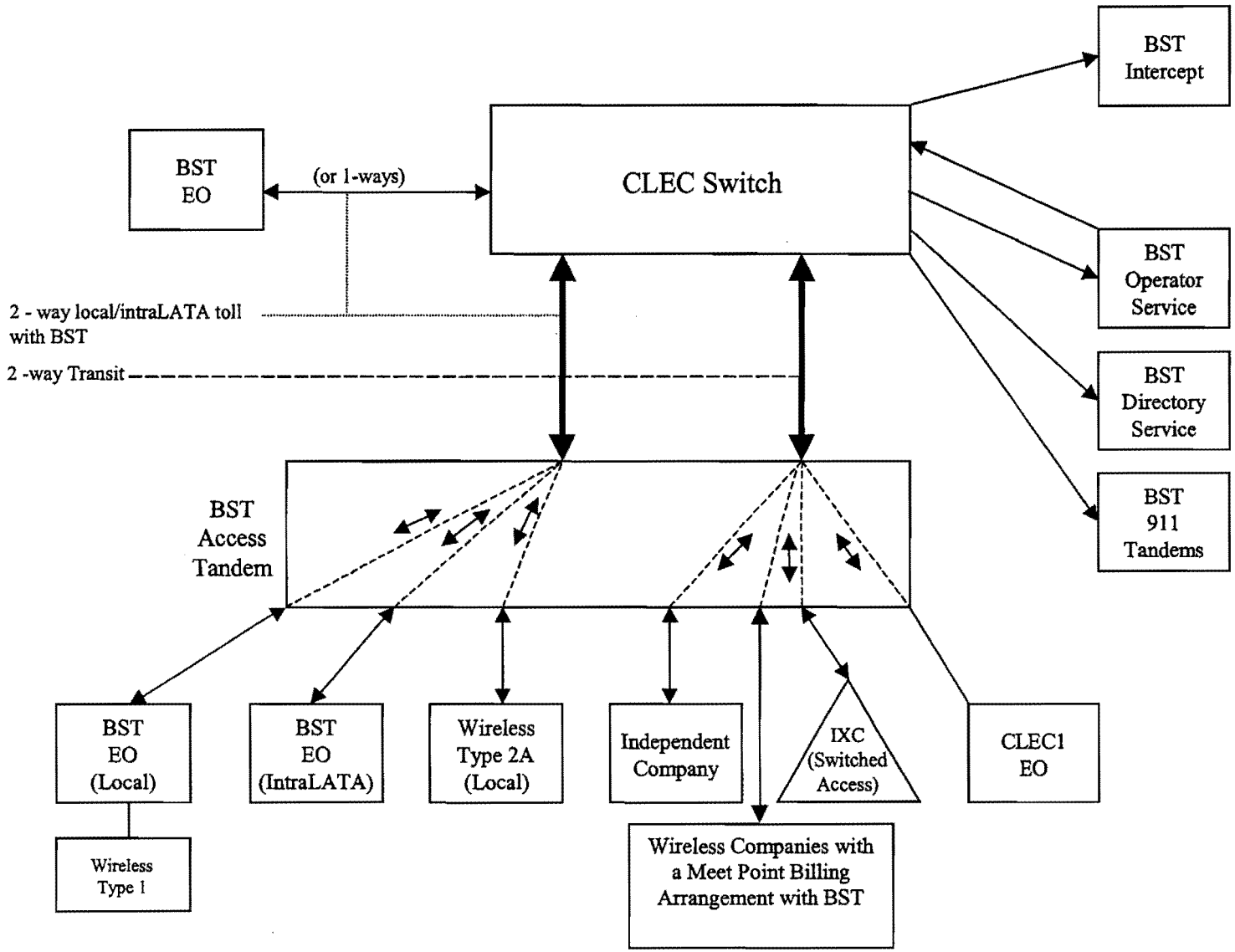

Exhibit E

Supergroup Architecture

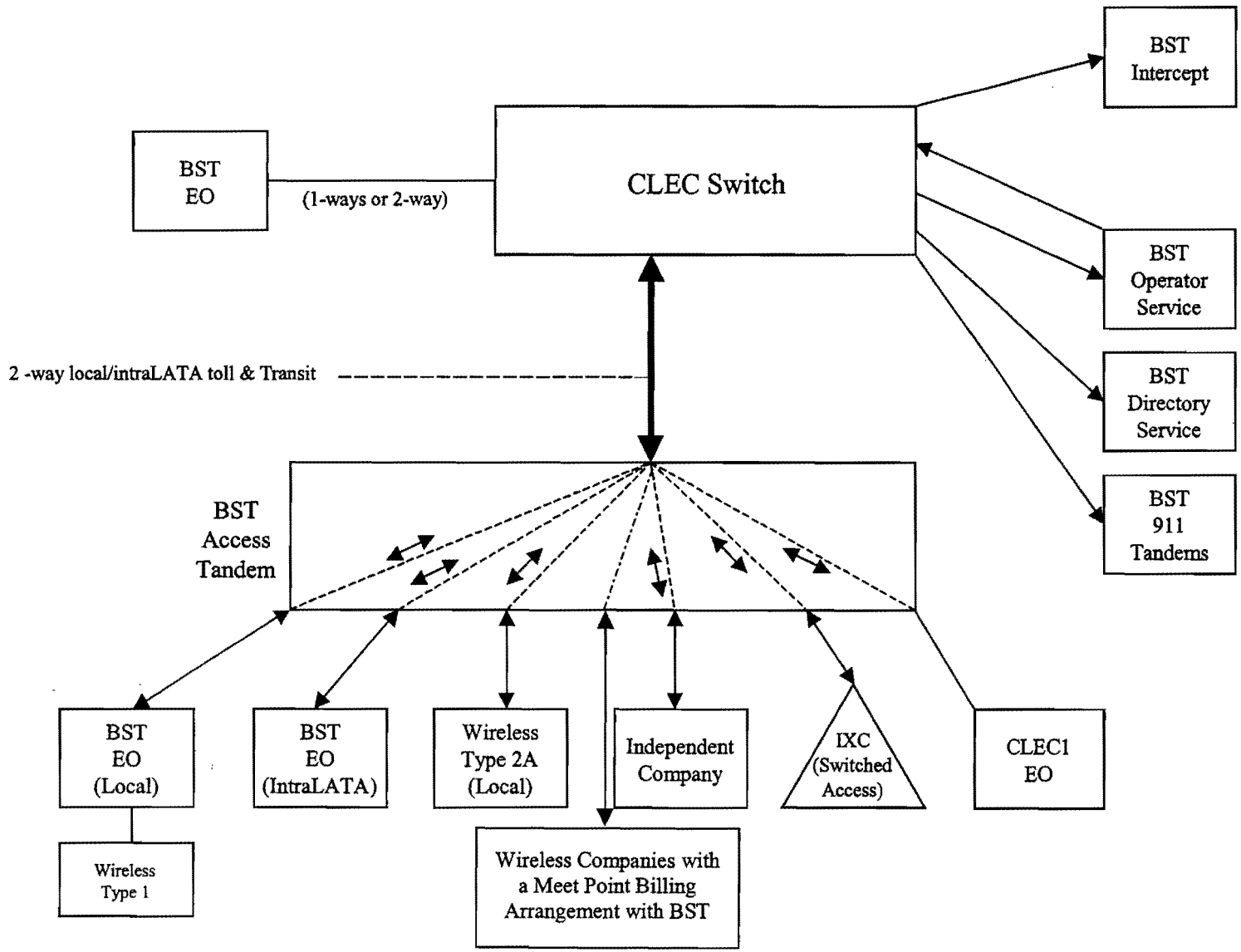

ATTACHMENT 3

LOCAL INTERCONNECTION

DISAGREE:

5.3.1.1
5.3.1.7

OPEN-AT&T	OPEN-BST
1.2	1.2
1.5	1.4.3
1.7	1.4.4
1.8	1.5
1.9 – 1.11	1.7
2.2.2	1.8
2.7	1.9 – 1.11
3.2 – 3.5	2.2.2
3.6.7	3.2 – 3.5
3.18.1.1	3.6.6
4.13.5.3	3.6.7
5.2	3.7
5.3.1.1	3.8
5.3.3	3.9
5.3.3.1	4.14.1
6	5.3.2

TABLE OF CONTENTS

1. NETWORK INTERCONNECTION 3

2. METHODS OF INTERCONNECTION 5

3. INTERCONNECTION TRUNKING AND ROUTING 8

4. NETWORK DESIGN AND MANAGEMENT FOR INTERCONNECTION 11

5. NETWORK MAINTENANCE 19

EXHIBIT A

EXHIBIT B

EXHIBIT C

EXHIBIT D

EXHIBIT E

EXHIBIT F

LOCAL INTERCONNECTION

1. NETWORK INTERCONNECTION

1.1 The Parties shall provide interconnection with each other's network for the transmission and routing of telephone exchange service (local) and exchange access (intraLATA toll and switched access).

1.1.1 BellSouth shall provide interconnection with BellSouth's network at any technically feasible point within BellSouth's network.

1.1.2 AT&T shall provide interconnection to BellSouth at any mutually agreed upon point.

1.2 **[AT&T must establish, at a minimum, a single Point of Presence, Point of Interface, and Point of Interconnection with BellSouth within the LATA for the delivery of AT&T's originated local, intraLATA toll terminated to BellSouth and transit traffic terminated to other than BellSouth.][OPEN-BST/AT&T]** If AT&T chooses to interconnect at a single Point of Interconnection within a LATA, the interconnection must be at a BellSouth access or local tandem. Furthermore, AT&T must establish Points of Interconnection at all BellSouth access and local tandems where AT&T NXXs are "homed." A "Homing" arrangement is defined by a "Final" Trunk Group between the BellSouth access or local tandem and AT&T End Office switch. A "Final" Trunk Group is the last choice telecommunications path between the access or local tandem and End Office switch. It is AT&T's responsibility to enter its own NPA/NXX access and/or local tandem "homing" arrangements into the national Local Exchange Routing Guide ("LERG"). In order for AT&T to home its NPA/NXX(s) on a BellSouth access or local tandem, AT&T's NPA/NXX(s) must be assigned to an exchange rate center area served by that BellSouth access or local tandem and as specified by BellSouth.

1.4 in 4/21 R Davet. OK with unbolded language

1.3 A Point of Presence is the physical location (a structure where the environmental, power, air conditioning, etc. specifications for a Party's terminating equipment can be met) at which a Party establishes itself for obtaining access to the other Party's network. The Point of Presence is the physical location within which the Point(s) of Interface occur.

1.4 A Point of Interface is the physical telecommunications interface between BellSouth and AT&T's interconnection facilities. It establishes the technical interface and point of operational responsibility. The primary purpose of the Point of Interface is to serve

as the terminus for each Party's interconnection facilities. The Point of Interface has the following main characteristics:

1.4.1 It is a cross-connect point to allow connection, disconnection, transfer or restoration of service.

1.4.2 It is a point where BellSouth and AT&T can verify and maintain specific performance objectives.

1.4.3 **[It is specified according to the interface offered in this Attachment 3.] [OPEN-BST]** 4/28 version shows removed

1.4.4 **[The Parties provide their own equipment to interface with the equipment on the customer premises.] [OPEN-BST]**

1.5 **[The Point of Interconnection is the point at which the originating Party delivers its originated traffic to the terminating Party's first point of switching on the terminating Party's common (shared) network for call transport and termination. Points of Interconnection are available at either access tandems, local tandems, End Offices, or any other technically feasible point, as described in this Agreement. AT&T's requested Point of Interconnection will also be used for the receipt and delivery of transit traffic at BellSouth access and local tandems. Points of Interconnection established at the BellSouth local tandem apply only to AT&T-originated local and local originating and terminating transit traffic.] [OPEN-BST/AT&T]**

1.6 The Parties will work cooperatively to establish the most efficient trunking network in accordance with the provisions set forth in this Attachment 3 and accepted industry practices.

1.7 **[Each party will be responsible for engineering its network (i.e., the underlying facilities on which trunks are provisioned) on its side of the Point of Interface.] AT&T, at its option, shall establish Points of Presence and Points of Interface for the delivery of its originated local and intraLATA toll traffic to BellSouth. The Point of Interface may not necessarily be established at the Point of Interconnection.] [OPEN-BST/AT&T]**

1.8 **[BellSouth shall designate the Points of Presence and Points of Interface for the delivery of its originated local and intraLATA toll traffic to AT&T for call transport and termination by AT&T.] [OPEN-BST/AT&T]**

1.9 **[For the purposes of this Attachment 3, Local Channel is defined as a switch transport facility between a Party's Point of Presence and its designated serving wire center.**

1.10 **For the purposes of this Attachment 3, Serving Wire Center is defined as the wire center owned by one Party from which the other Party would normally obtain dial tone for its Point of Presence.**

1.11 **For the purposes of this Attachment 3, Dedicated Transport is defined as a switch transport facility between a Party's designated serving wire center and the first point of switching on the other Party's common (shared) network.] [OPEN-BST/AT&T]**

2. METHODS OF INTERCONNECTION

2.1 The Parties shall interconnect their networks utilizing one of the following methods in accordance with the provisions set forth in this Attachment 3.

2.2 Interconnection by one Party at the premises of the other Party.

2.2.1 BellSouth shall provide collocation to AT&T pursuant to the terms set forth in Attachment 4 of this Agreement, incorporated herein by this reference. AT&T may, at its option, purchase such collocation at the rates, terms, and conditions set forth in Attachment 4 of this Agreement, incorporated herein by this reference.

2.2.2 **[AT&T, at its sole discretion, may permit BellSouth to utilize space and power in AT&T facilities specified by AT&T solely for the purpose of terminating BellSouth's local traffic. BellSouth may request installation of both cable and equipment, or cable only. The pricing, terms and conditions of such arrangement shall be pursuant to Exhibit [redacted] of this Attachment 3, incorporated herein by this reference.] [OPEN-BST/AT&T]**

2.3 Leased Facilities – where the Party requesting interconnection utilizes the facilities offered by the other Party. Such leased facilities shall be provided at the rates, terms, and conditions set forth in this Attachment 3. At AT&T's request, it may lease separate facilities for the sole purpose of delivering undipped 8YY traffic from AT&T's end users to BellSouth's Switching Services Port ("SSP") for dipping into BellSouth's toll free database.

2.4 Third Party Facilities – where the Party requesting interconnection utilizes the facilities provided by a source other than the Parties to this Agreement. The Party utilizing this option shall comply with industry

standards to maintain network integrity and will be solely responsible for any charges or fees assessed by the third party for use of its facilities.

2.5 Commercial Intra-building Interconnection – where both Parties have constructed broadband facilities into a commercial building (i.e., a building that is not a telephone central office) and agree to establish a Point of Interface at such location utilizing intra-building cable.

2.6 "Fiber Meet" is an interconnection arrangement whereby the Parties physically interconnect their networks via an optical fiber interface (as opposed to an electrical interface), at which one Party's facilities, provisioning, and maintenance responsibility begins and the other Party's responsibility ends (i.e., Point of Interface). A Fiber Meet shall be an arrangement as set forth in Section 2.9 of this Attachment 3.

2.7 Any other method determined to be technically feasible and requested by AT&T shall be done pursuant to the process defined in Attachment 10 of this Agreement, incorporated herein by this reference. Any other method determined to be technically feasible and requested by BellSouth and agreed to by AT&T shall be done pursuant to [redacted] **[OPEN-AT&T]**

2.8 Local Tandem Interconnection. This interconnection arrangement allows AT&T to establish a Point of Interconnection at BellSouth local tandems for: (1) the delivery of AT&T-originated local traffic transported and terminated by BellSouth to BellSouth end offices within the local calling area as defined in BellSouth's General Subscriber Services Tariff, Section A3 served by those BellSouth local tandems; and (2) for local transit traffic transported by BellSouth for third party network providers who have also established Points of Interconnection at those BellSouth local tandems.

2.8.1 When a specified local calling area is served by more than one BellSouth local tandem, AT&T must designate a "home" local tandem for each of its assigned NPA/NXXs and establish trunk connections to such local tandems. Additionally, AT&T may choose to establish a Point of Interconnection at the BellSouth local tandems where it has no codes homing but is not required to do so. AT&T may deliver local traffic to a "home" BellSouth local tandem that is destined for other BellSouth or third party network provider end offices subtending other BellSouth local tandems in the same local calling area where AT&T does not choose to establish a Point of Interconnection. It is AT&T's responsibility to enter its own NPA/NXX local tandem homing arrangements into the LERG either directly or via a vendor in order for other third party network providers to determine appropriate traffic routing to AT&T's codes. Likewise, AT&T shall obtain its routing information from the LERG.

2.8.2 Not withstanding establishing Points of Interconnection to BellSouth's local tandems, AT&T must also establish Points of Interconnection to BellSouth access tandems within the LATA on which AT&T has NPA/NXX's homed for the delivery of Interexchange Carrier Switched Access ("SWA") and toll traffic, and traffic to Type 2A CMRS connections located at the access tandems. BellSouth cannot switch SWA traffic through more than one BellSouth access tandem. SWA, Type 2A CMRS or toll traffic routed to the local tandem in error will not be backhauled to the BellSouth access tandem for completion. (Type 2A CMRS interconnection is defined in BellSouth's General Subscriber Services Tariff, Section A35.)

2.8.3 Bell South's provisioning of local tandem interconnection assumes that AT&T has the necessary local interconnection arrangement with the other third party network providers subtending those local tandems as required by the Act.

2.9 Fiber Meet

2.9.1 If AT&T elects to establish a Point of Interconnection with BellSouth pursuant to a Fiber Meet, AT&T and BellSouth shall jointly engineer and operate a Synchronous Optical Network ("SONET") transmission system by which they shall interconnect their transmission and routing of local traffic via a Local Channel facility at either the DS0, DS1, or DS3 level and shall be ordered via an Access Services Request ("ASR") in the initial phase of this offering. The Parties shall work jointly to determine the specific transmission system. The parties will work cooperatively to establish joint access to transmission overhead signals and commands for such facilities and software. However, AT&T's SONET transmission must be compatible with BellSouth's equipment in the serving wire center. The Parties will work cooperatively in the selection of compatible transmission equipment and software. Fiber Meet will be used for the provision of two-way trunking unless otherwise agreed to by the Parties.

2.9.2 BellSouth shall, wholly at its own expense, procure, install and maintain the agreed upon SONET equipment in the BellSouth Serving Wire Center ("BSWC").

2.9.3 AT&T shall, wholly at its own expense, procure, install and maintain the agreed upon SONET equipment in the AT&T Serving Wire Center ("ASWC").

2.9.4 The parties shall mutually agree upon a Point of Interface outside of the BSWC as a Fiber Meet point and shall make all necessary preparations to receive and to allow and enable delivery of fiber optic facilities into the Point of Interface with sufficient spare length to reach

the Point of Interface. A Common Language Location Identification ("CLLI") code will be established for each Point of Interface. The code established must be a building type code. All orders shall originate from the Point of Interface (i.e., Point of Interface to AT&T, Point of Interface to BellSouth).

2.9.5 The Parties shall deliver and maintain their own strands wholly at their own expense. Upon verbal request by either Party, the other Party shall allow access to the Fiber Meet entry point for maintenance purposes as promptly as possible.

2.9.6 The Parties shall jointly coordinate and undertake maintenance of the SONET transmission system. Each Party shall be responsible for maintaining the components of their own SONET transmission system.

2.9.7 Each Party will be responsible for (i) providing its own transport facilities to the Fiber Meet, and (ii) the cost to build-out its facilities to such Fiber Meet.

2.9.8 Neither Party shall charge the other for its portion of the Fiber Meet facility between the ASWC and the BSWC used exclusively for the other Party's local traffic (i.e., the Local Channel). The Parties do not intend to utilize this arrangement for transit traffic.

3. INTERCONNECTION TRUNKING AND ROUTING

3.1 The Parties will convert all existing interconnection arrangements and trunks to the interconnection arrangements described in this Attachment in accordance with the following:

3.2 [Within 45 days of the Effective Date, the Parties will mutually develop an operations plan based on sound engineering and operations principles, which will specify the guidelines to convert from the existing interconnection arrangements to the interconnection arrangements described in this Attachment 3. Such guidelines will conform to standard industry practices adopted by and contained in documents published by Industry Forums, including but not limited to, the Alliance for Telecommunications Industry Solutions ("ATIS") and the Ordering and Billing Forum ("OBF").

3.3 Each Party shall bear its own costs to convert from the existing interconnection arrangements to the interconnection arrangements described in this Attachment.

3.4 **Unless otherwise mutually agreed, the Parties will complete the conversion within one [1] year of the Effective Date of the Agreement.**

3.5 **If, following one [1] year after the Effective Date of the Agreement, there exists any interconnection trunks which have not been converted to the interconnection arrangements described in this Attachment 3, then either Party may invoke the dispute resolution proceeding, pursuant to Section 16 of the General Terms and Conditions of this Agreement, incorporated herein by this reference. [OPEN-BST/AT&T]**

3.6 The Parties will use the following interconnection standards:

3.6.1 The Parties agree to establish Binary 8 Zero Sum Extended Superframe line protocol, where technically feasible.

3.6.2 In those cases where either Party's equipment will not support 64K Clear Channel Capability ("CCC"), the Parties agree to establish AMI line coding. Any AMI line coding will be Superframe formatted. DS3 facilities will be provisioned with C-bit parity.

3.6.3 Where additional equipment is required, such equipment shall be obtained, engineered, and installed to support 64K CCC trunks.

3.6.4 All interconnection facilities between the Parties will be sized according to mutual forecasts developed per the requirements of Section 4.14 of this Attachment 3 and sound engineering practices.

3.6.5 Interconnection will be provided utilizing either a DS1 or DS3 interface or, with the mutual agreement of the Parties, another technically feasible interface (e.g., STS-1).

3.6.6 BellSouth and AT&T shall establish interconnecting trunk groups and trunking configurations between networks including the establishment of one-way or two-way trunks in accordance with **[Exhibit [redacted] of this Attachment 3, attached hereto and incorporated herein by this reference.] [OPEN-BST to provide list]**

3.6.7 **[All terms and conditions, as well as charges, both non-recurring and recurring, associated with interconnecting trunk groups between BellSouth and AT&T not addressed in Exhibit A shall be as set forth in the appropriate Party's intrastate or interstate tariff for switched access services. For two-way trunking that carries the Parties' local and intraLATA toll traffic, excluding transit traffic, the Parties shall be compensated for the nonrecurring and recurring charges for trunks and DS1 facilities at 50% of the**

applicable contractual or tariff rates for the services provided by each Party. AT&T shall be responsible for ordering and paying for any two-way trunks carrying transit traffic.] [OPEN-BST/AT&T]

Rmvd

[The Parties will work cooperatively to assure that reasonable diversity is achieved among the trunk groups between each Party's switches within each LATA.] [OPEN-BST]

3.8 OK - subject to BST ✓

All originating toll free service calls for which the end office Party performs the SSP function, if delivered to the tandem Party, shall be delivered by the end office Party using GR-394 CORE format for IXC bound calls, or using GR-317-CORE format for LEC bound calls. [OPEN-BST]

3.9 BST ✓ng

[Originating Feature Group B calls delivered to either Party's tandem shall use GR-317-CORE signaling format unless the associated FGB carrier employs GR-394-CORE signaling for its FGB traffic at the serving access tandem.] [OPEN-BST]

3.10 The Parties shall deliver over any trunk groups groomed for a specific access tandem only traffic destined for those publicly-dialable NPA NXX codes served by: (1) end offices that directly subtend the access tandem; and (2) those providers (including, but not limited to CMRS providers, other independent LECs, and CLECs) that directly connect to the access tandem.

3.11 For BellSouth end offices that do not normally subtend tandem for which calls are routed to that end office on an alternate routing basis, BellSouth will provide AT&T its alternative routing (scheme) arrangements. Where BellSouth utilizes alternative arrangements, it shall deliver any traffic through that alternative routing.

3.12 The Parties shall deliver over any trunk groups groomed for a specific end office only traffic destined for those publicly-dialable NPA NXX codes served by that end office, unless otherwise agreed to by the Parties.

3.13 The source for the routing information for all traffic shall be the LERG, unless otherwise agreed to between the Parties.

3.14 Where either Party delivers over the local traffic trunk groups miscellaneous calls (e.g., time, weather, 976) destined for the other Party, it shall deliver such traffic in accordance with the serving arrangements defined in the LERG.

3.15 The Parties will cooperate to establish separate, choke trunk groups for the completion of calls to customers such as radio contest lines.

Notwithstanding the foregoing, the Parties agree that where the Parties' switch has the capability to perform call gapping and other protective network traffic management controls, separate trunk groups shall not be required to carry such traffic.

3.16 N11 code traffic shall be routed between the Parties' networks pursuant to accepted industry practice (e.g., over local traffic trunks or over separate trunk groups).

3.17 Each Party shall establish procedures whereby its operator bureau will coordinate with the operator bureau of the other Party in order to provide Busy Line Verification/Busy Line Verification Interrupt ("BLV/BLVI") services on calls between their respective line side end users for numbers that are not ported.

3.18 A blocking standard of one-half of one percent (.005) shall be maintained during the average busy hour for final trunk groups carrying jointly provided exchange access traffic between an end office and an access tandem. All other final trunk groups are to be engineered with a blocking standard of one percent (.01). High usage trunk groups shall be sized to an economic CCS parameter mutually agreed to by both Parties.

3.18.1.1 BellSouth agrees to provide upon request of AT&T, pursuant to Section [redacted] of the General Terms and Conditions of this Agreement, traffic usage data (including, but not limited to, usage, peg and overflow counts) for each AT&T NXX subtending the BellSouth tandem to determine which AT&T traffic by NXX is being blocked. [OPEN-AT&T]

BST 1Kry
+ use
nothing
else
open

3.18.1.2 Pursuant to Attachment 9, incorporated herein by this reference, BellSouth shall report to AT&T information regarding blocking of interconnection traffic.

3.19 The Parties agree to jointly manage the capacity of interconnection trunk groups to encourage the economic deployment of increasingly robust and diverse interconnection between their networks.

4. NETWORK DESIGN AND MANAGEMENT FOR INTERCONNECTION

4.1 Network Management and Changes. Both Parties will work cooperatively with each other to install and maintain the most effective and reliable interconnected telecommunications networks, including but not limited to, the exchange of toll-free maintenance contact numbers and escalation procedures. Both Parties agree to provide public notice of changes in the information necessary for the

transmission and routing of services using its local exchange facilities or networks, as well as of any other changes that would affect the interoperability of those facilities and networks.

4.2 Interconnection Technical Standards. The interconnection of all networks will be based upon accepted industry/national guidelines for transmission standards and traffic blocking criteria. Interconnecting facilities shall conform, at a minimum, to the technical specifications set forth in the applicable industry standard technical references. Signal transfer point, Signaling System 7 ("SS7") connectivity is required at each interconnection point. BellSouth will provide out-of-band signaling using Common Channel Signaling Access Capability where technically and economically feasible, in accordance with the technical specifications set forth in the applicable industry standard technical references. Facilities of each Party shall provide the necessary on-hook, off-hook answer and disconnect supervision and shall hand off calling number ID (Calling Party Number) when technically feasible.

4.3 Quality of Interconnection. The local interconnection for the transmission and routing of telephone exchange service and exchange access that each Party provides to each other will be at least equal in quality to what it provides to itself and any subsidiary or affiliate, where technically feasible, or to any other Party to which each Party provides local interconnection.

4.4 Common Channel Signaling. Both Parties will provide LEC-to-LEC Common Channel Signaling ("CCS") to each other, where available, in conjunction with all traffic in order to enable full interoperability of CLASS features and functions except for call return. All CCS signaling parameters will be provided, including automatic number identification ("ANI"), originating line information ("OLI") calling company category, charge number, etc. All privacy indicators will be honored, and each Party will cooperate with each other on the exchange of Transactional Capabilities Application Part ("TCAP") messages to facilitate full interoperability of CCS-based features between the respective networks. The Parties will provide all line information signaling parameters including, but not limited to, Calling Party Number, Charge Number (if it is different from calling party number), and originating line information ("OLI"). For terminating FGD, either Party will pass any CPN it receives from other carriers. All privacy indicators will be honored. Where available, network signaling information such as Transit Network Selection ("TNS") parameter (SS7 environment) will be provided by the end office Party wherever such information is needed for call routing or billing. Where TNS information has not been provided by the end office Party, the tandem Party will route originating exchange access traffic to the IXC using available translations. The

Parties will follow all industry Ordering and Billing Forum ("OBF") adopted guidelines pertaining to TNS codes.

4.4.1 BellSouth's Common Channel Signaling Access Service ("CCSAS") allows interconnected carriers to exchange signaling information over a communications path that is separate from the message path.

4.4.2 The transport portion of CCSAS, commonly referred to as a signaling link, is provided via dedicated 56 kbps out of band signaling connections between the AT&T signaling point of interconnection and BellSouth's signaling point of interconnection ("SPOI").

4.4.3 The network termination point where this interconnection takes place is called the Signaling Transfer Point ("STP") port termination.

4.4.4 Charges for signaling links and the STP port termination can be found in Attachment 2 of this Agreement, incorporated herein by this reference.

4.4.5 Each CCSAS signaling connection provides for two-way digital transmission at speeds in multiples of 56 kbps. The connection to BellSouth's STP pair can be made from either AT&T's signaling point ("SP"), which requires a minimum of two links, or from AT&T's STP pair, which requires a minimum of four links.

4.5 SS7 Interconnection will take place at STP locations that are mutually agreed to by the Parties.

4.6 Where CCS is not available, in-band multi-frequency signaling will be provided. In such an arrangement, each Party will outpulse the full ten-digit telephone number of the called party to the other Party with appropriate call set-up and Automatic Number Identification ("ANI") where available, at parity.

4.7 The Parties will provide CCS to one another, where and as available, in conjunction with access to call related databases and Service Control Points ("SCP"), including toll free databases, Line Information Database ("LIDB"), Calling Name ("CNAM"), and any other necessary databases.

4.8 When the Parties establish new links , each Party shall provide its own STP port termination(s) and charge the other Party for the signaling links as follows

4.8.1 Where the SPOI for the signaling link is at a Fiber Meet, there shall be no compensation between the Parties for the signaling link facilities used.

4.8.2 Where the SPOI for the signaling link facilities is located at the BellSouth Serving Wire Center where the signaling link facilities terminates and AT&T has furnished the interconnection facility, BellSouth will pay a monthly charge equal to one half of the AT&T-provided facility charge according to BellSouth's unbundled rate element for the facility used. Rates for said interconnection facilities shall be as set forth in Exhibit [redacted] in Attachment 2, incorporated herein by this reference.

4.8.3 Where the SPOI for the signaling link facilities is located at the AT&T Serving Wire Center facility where the signaling link facilities terminate and BellSouth has furnished the interconnection facility, AT&T will pay a monthly charge equal to one half of the BellSouth-provided facility charge according to BellSouth's unbundled rate element for the facility used. Rates for said interconnection facilities shall be as set forth in Exhibit [redacted] in Attachment 2, incorporated herein by this reference.

4.8.4 Each party is responsible for all facility maintenance and provisioning on its side of the SPOI.

4.9 Implementation of new interconnection arrangements (as opposed to augmentation of existing arrangements), including testing of SS7 interconnection, shall be pursuant to the technical specifications set forth in the applicable industry standard technical references. Each Party will be expected to provide sufficient cooperative testing resources to ensure proper provisioning, including the ability to confirm that AT&T LERG-assigned NPA NXX codes have been opened, translated and routed accurately in all appropriate BellSouth switches. A mutually agreed test calling plan shall be conducted to ensure successful completion of originating and terminating calls.

4.10 <u>Message Screening</u>

4.10.1 BellSouth shall set message screening parameters so as to accept messages from AT&T local or tandem switching systems destined to any signaling point in the BellSouth SS7 network or any network interconnected to the BellSouth SS7 network with which the AT&T switching system has a legitimate signaling relationship.

4.10.2 BellSouth shall set message screening parameters so as to accept messages destined to/from an AT&T local or tandem switching system or to/from an AT&T Service Control Point ("SCP") from any signaling point or network interconnected to the BellSouth SS7 network with which the AT&T switching system has a legitimate signaling relationship.

4.11 <u>STP Requirements</u>

4.11.1 BellSouth shall provide message transfer part and Signaling Connection Control Point ("SCCP") protocol interfaces in accordance with the technical specifications set forth in the applicable industry standard technical references.

4.12 SS7 Network Interconnection

4.12.1 SS7 Network Interconnection is the interconnection of AT&T STPs and AT&T local or tandem switching systems with the BellSouth STPs. This interconnection provides connectivity that enables the exchange of SS7 messages among BellSouth switching systems and databases, AT&T local or tandem switching systems and other third-party switching systems directly connected to the BellSouth SS7 network.

4.12.2 SS7 Network Interconnection shall provide connectivity to all components of the BellSouth SS7 network. These include:

4.12.2.1 BellSouth local or tandem switching systems;

4.12.2.2 BellSouth databases; and

4.12.2.3 Other third-party local or tandem switching systems.

4.12.3 The connectivity provided by SS7 Network Interconnection shall fully support the functions of BellSouth switching systems and databases and AT&T or other third-party switching systems with [note could be A or D/B link] direct access to the BellSouth SS7 network.

4.12.4 SS7 Network Interconnection shall provide transport for certain types of TCAP messages. If traffic is routed based on dialed or translated digits between an AT&T local switching system and a BellSouth or other third-party local switching system, either directly or via a BellSouth tandem switching system, then it is a requirement that the BellSouth SS7 network convey via SS7 Network Interconnection the TCAP messages that are necessary to provide Call Management services (Automatic Callback, Automatic Recall, and Screening List Editing) between the AT&T local STPs and the BellSouth or other third-party local switch.

4.12.5 When the capability to route messages based on Intermediate Signaling Network Identifier ("ISNI") is generally available on BellSouth STPs, the BellSouth SS7 Network shall also convey TCAP messages using SS7 Network Interconnection in similar circumstances where the BellSouth switch routes traffic based on a Carrier Identification Code ("CIC").

4.12.6 BellSouth shall offer the following SS7 Network Interconnection options to connect AT&T or AT&T-designated local or tandem switching systems or STPs to the BellSouth SS7 network:

4.12.6.1 A-link interface from AT&T local or tandem switching systems; and

4.12.6.2 D/B-link interface from AT&T STPs.

4.12.7 Each interface shall be provided by one or more sets (layers) of signaling links, as follows:

4.12.7.1 An A-link layer shall consist of two links.

4.12.7.2 A D/B-link layer shall consist of four links.

4.12.8 The Parties agree to implement intraoffice diversity for the signaling links so that no single failure of intraoffice facilities or equipment shall cause the failure of any two links in a layer connecting to a BellSouth STP.

4.13 Trunk Forecasting and Servicing Requirements.

4.12.1 The Parties shall exchange technical descriptions and forecasts of their interconnection and traffic requirements in sufficient detail necessary to establish the interconnections required to assure traffic completion to and from all customers in their respective designated service areas. In order for BellSouth to provide as accurate reciprocal trunking forecasts as possible to AT&T, AT&T must timely inform BellSouth of any known or anticipated events that may affect BellSouth reciprocal trunking requirements. If AT&T refuses to provide such information, BellSouth shall provide reciprocal trunking forecasts based only on existing trunk group growth and BellSouth's annual estimated percentage of BellSouth subscriber line growth.

4.13.1 Both Parties shall meet every six months or at otherwise mutually agreeable intervals for the purpose of exchanging non-binding forecast of its traffic and volume requirements for the interconnection and network elements provided under this Agreement, in the form and in such detail as agreed by the Parties. The Parties agree that each forecast provided under this section shall be deemed "Confidential Information" as set forth in Section 18 of the General Terms and Conditions of this Agreement, incorporated herein by this reference.

4.13.2 The trunk forecast should include trunk requirements for all of the interconnecting trunk groups for the current year plus the next two future years. The forecast meeting between the two companies may be a face-to-face meeting, video conference or audio conference. It may be held regionally or geographically. Ideally, these forecast

meetings should be held at least semi-annually, or more often if the forecast is no longer usable. Updates to a forecast or portions thereof should be made whenever the Party providing the forecast deems that the latest trunk requirements exceed the original quantities by 48 trunks or 10%, whichever is greater. Either Party should notify the other Party if they have measurements indicating that a trunk group is exceeding its designed call carrying capacity and is impacting other trunk groups in the network. Also, either Party should notify the other Party if they know of situations in which the traffic load is expected to increase significantly and thus affect the interconnecting trunk requirements as well as the trunk requirements within the other Party's network. The Parties agree that the forecast information provided under this section shall be deemed "Confidential Information" as set forth in Section 18 of the General Terms and Conditions of this Agreement, incorporated herein by this reference. Each Party shall provide a specified point of contact for planning, forecasting and trunk servicing purposes.

4.13.3 For a non-binding trunk forecast, agreement between the two Parties on the trunk quantities and the timeframe of those trunks does not imply any liability for failure to perform if the trunks are not available for use at the required time.

4.13.4 Signaling Call Information. BellSouth and AT&T will send and receive 10 digits for local traffic. Additionally, BellSouth and AT&T will exchange the proper call information, i.e., originated call company number and destination call company number, CIC, and OZZ, including all proper translations for routing between networks and any information necessary for billing.

4.13.5 Both Parties will manage the capacity of their interconnection trunk groups. BellSouth will issue an ASR to AT&T to order changes BellSouth desires to the BellSouth interconnection trunk groups based on BellSouth's capacity assessment. AT&T will issue an ASR to BellSouthBellSouth to order changes AT&T desires to the AT&T interconnection trunk groups based on AT&T's capacity assessment.

4.13.5.1 Either Party may issue a Trunk Group Service Request ("TGSR") to the other Party to order changes it desires to the interconnection trunk groups based on its capacity assessment. The Party receiving the TGSR will, within ten (10) business days, respond with an ASR or an explanation of why it believes an ASR is inappropriate.

4.13.5.2 The Party submitting an ASR will provide complete and accurate tie down inventory assignments in typical industry bay, panel and jack format, or in such other format as the Parties agree, on each order by

use of a Design Layout Record. Additional tie down information, such as span information, may be required when applicable.

4.13.5.3 The Parties will prepare ASRs pursuant to the industry standard guidelines of the OBF. **[When submitting an ASR, BellSouth will identify AT&T's end office in the SEC LOC field of the ASR form.] [OPEN-AT&T]**

4.13.5.4 The Party provisioning the ASR will assign to the requesting Party a location code expressed in CLLI code format that will appear in the Access Customer Terminal Location Field of the ASR.

4.13.6 The standard interval used for the provisioning of additions to local interconnection trunk groups shall be no greater than ten (10) business days, for orders of fewer than ninety-six (96) DS-0 trunks. Other orders shall be determined on an individual case basis. Where feasible, either Party will expedite installation, upon the other Party's request.

4.13.7 Major projects shall be limited to those projects that require the coordination and execution of multiple orders or related activities between and among BellSouth and AT&T work groups specifically relating to: (i) the initial establishment of local interconnection trunk groups; (ii) extending service into a new area; (iii) NXX code moves; (iv) facility grooming; or (v) network rearrangements. If orders that are component pieces of a major project are submitted after project implementation has been jointly planned and coordinated, they shall be submitted with a major project reference. Several orders submitted at one time may not be classified as a major project without the consent of the submitting Party. Each Party will identify a single point of contact that will be responsible for overall coordination and management of a major project through an agreed completion point.

4.13.8 As provided herein, AT&T and BellSouth agree to exchange escalation lists which reflect contact personnel including vice president level officers. These lists shall include name, department, title, phone number, and fax number for each person. AT&T and BellSouth agree to exchange an up-to-date list promptly following changes in personnel or information.

4.14 <u>Interference or Impairment</u>

4.14.1 [Within three (3) business days of receipt of notification of blocking of traffic originated within the other Party's network, the Parties shall determine and begin work to implement reasonable corrective measures in a manner consistent with industry practices.] [OPEN-BST]

4.15 Local Dialing Parity

4.15.1 BellSouth and AT&T shall provide local and toll dialing parity to each other with no unreasonable dialing delays. Dialing parity shall be provided for all originating telecommunications services that require dialing to route a call. BellSouth and AT&T shall permit similarly situated telephone exchange service end users to dial the same number of digits to make a local telephone call notwithstanding the identity of the end user's or the called party's telecommunications service provider.

5. NETWORK MAINTENANCE

5.1 Outage Repair Standard

5.1.1 In the event of an outage or trouble in any arrangement, facility, or service being provided by BellSouth hereunder, BellSouth will follow procedures for isolating and clearing the outage or trouble that are no less favorable than those that apply to comparable arrangements, facilities, or services being provided by BellSouth to itself, Affiliate or any other carrier whose network is connected to that of BellSouth.

5.2 **[BellSouth shall provide AT&T at least sixty (60) days' advance notice of any scheduled maintenance activity which may impact AT&T's end users. Scheduled maintenance shall include, without limitation, such activities as, switch software retrofits, power tests, major equipment replacements and cable rolls. Plans for scheduled maintenance shall include, at a minimum, the following information: location and type of facilities, specific work to be performed, date and time work is scheduled to commence, work schedule to be followed, date and time work is scheduled to be completed, estimated number of work-hours for completion.] [OPEN-AT&T]**

OK w/ AT&T

5.3 Interconnection Compensation

Diff in AT&T Version 4/28

5.3.1 Compensation for Local Traffic

5.3.1.1 Local Traffic means any telephone call that originates and terminates ~~in the same LATA and is billed by the originating Party as a local call~~ **[when the originating Party has its own switch]. [OPEN-AT&T]** Therefore, when an AT&T end user originates ~~traffic and AT&T~~ sends it to BellSouth for termination, AT&T will determine whether the traffic is local or intraLATA toll. When a BellSouth end user originates traffic and BellSouth sends it to AT&T for termination, BellSouth will determine whether the traffic is local or intraLATA toll. Each Party will provide the other with information that will allow it to distinguish local

from intraLATA toll traffic. At a minimum, each Party shall utilize NXX's in such a way that the other Party shall be able to distinguish local from intraLATA toll traffic.

DISAGREE

AT&T PROPOSAL: As clarification of this definition and for reciprocal compensation, Local Traffic does include traffic that originates from or terminates to or through an enhanced service provider or information service provider.

BST PROPOSAL: As clarification of this definition and for reciprocal compensation, Local Traffic does not include traffic that originates from or is directed to or through an enhanced service provider or information service provider. As further clarification, Local Traffic does not include traffic that consists of minutes of use from any end user customer that relies upon a call placed by that end user customer or on the end user customer's behalf to establish or maintain a network connection, if: (a) minutes of use to be billed are primarily associated with traffic of a type not routinely and ordinarily recognized by a reasonable person to constitute traffic as a result of a telephone call (i.e., voice or data traffic); (b) the end user customer does not control the destination of the call; and (c) the minutes of use do not serve a legitimate purpose that is unrelated to the receipt of reciprocal compensation or any other benefit that may be derived solely from establishing or maintaining the network connection.

5.3.1.2 The Parties shall provide for the mutual and reciprocal recovery of the costs for the network facilities utilized in transporting and terminating local traffic on each other's network. The Parties agree that charges for transport and termination of calls on their respective networks are as set forth in Exhibit A to this Attachment.

5.3.1.3 For the purposes of this Attachment 3, Common (Shared) Transport is defined as the transport of one Party's traffic by the other Party over the other Party's common (shared) facilities between the other Party's tandem switch and end office switch and/or between the other Party's tandem switches.

5.3.1.4 For the purposes of this Attachment 3, Tandem Switching is defined as the function that establishes a communications path between two switching offices through a third switching office (the Tandem switch).

5.3.1.5 For the purposes of this Attachment 3, End Office Switching is defined as the function that establishes a communications path between the trunk side and line side of the End Office switch.

5.3.1.6 If AT&T utilizes a switch outside the LATA and BellSouth chooses to purchase dedicated or common (shared) transport from AT&T for transport and termination of BellSouth originated traffic, BellSouth will pay AT&T no more than the airline miles between the V & H coordinates of the Point of Interface within the LATA where AT&T receives the BellSouth-originated traffic and the V & H coordinates of the BellSouth Exchange Rate Center Area that the AT&T terminating NPA/NXX is associated in the same LATA. For these situations, BellSouth will compensate AT&T at either dedicated or common (shared) transport rates specified in Exhibit A and based upon the network facilities provided by AT&T as defined in this Attachment 3.

5.3.1.7 DISAGREE

AT&T PROPOSAL: ~~Neither Party shall represent access services traffic (e.g., Internet Protocol Telephony, FGA, FGB, etc.) as Local Traffic for purposes of payment of reciprocal compensation. "Internet Protocol Telephony" is defined as real-time voice conversations over the Internet by converting voices into data which is compressed and split into packets, which are sent over the Internet like any other packets and reassembled as audio output at the receiving end.~~

BST PROPOSAL: Neither Party shall represent access services traffic (e.g., Internet Protocol Telephony, FGA, FGB, etc.) as Local Traffic for purposes of payment of reciprocal compensation. "Internet Protocol Telephony" is defined as real-time voice conversations over the Internet by converting voices into data which is compressed and split into packets, which are sent over the Internet like any other packets and reassembled as audio output at the receiving end.

5.3.2 [Unidentifiable traffic. AT&T shall utilize its NPA/NXXs in such a way and will provide the necessary information so that BellSouth shall be able to distinguish local from intraLATA toll traffic for BellSouth originated traffic. AT&T end users assigned NPA/NXX line numbers shall be physically located in the BellSouth rate center with which the NPA/NXX has been associated. Whenever BellSouth delivers traffic to AT&T for termination on the AT&T's network, if BellSouth cannot determine, because of the manner in which AT&T has utilized its NXX codes whether the traffic is local or toll, BellSouth will charge the applicable rates for originating intrastate network access service as reflected in BellSouth's Intrastate Access Services Tariff. BellSouth will make appropriate billing adjustments if AT&T can provide sufficient

information for BellSouth to determine whether said traffic is local or toll.] [OPEN-BST]

5.3.3 Percent Local Use. Each Party will report to the other a Percentage Local Usage ("PLU"). The application of the PLU will determine the amount of local minutes to be billed to the other Party. For purposes of developing the PLU, each Party shall consider every local call and every long distance call, excluding intermediary traffic. **[By the first of January, April, July and October of each year, BellSouth and AT&T shall provide a positive report updating the PLU. Detailed requirements associated with PLU reporting shall be as set forth in BellSouth's Standard Percent Local Use Reporting Platform for Interconnection Purchasers, as it is amended from time to time during this Agreement.] [OPEN-AT&T]** Notwithstanding the foregoing, where the terminating company has message recording technology that identifies the traffic terminated, such information, in lieu of the PLU factor, shall at the company's option be utilized to determine the appropriate reciprocal compensation to be paid.

5.3.3.1 [Notwithstanding the reporting interval set forth in Section 5.3.3, BellSouth will accept and implement a monthly PLU, for a period of twelve (12) months, whenever AT&T gains an end user whose calling pattern and traffic would likely have an impact on the PLU reported by AT&T or whenever AT&T opens a new calling area or begins marketing local services in a new area. After reporting the PLU monthly for a twelve (12) month period, the PLU reporting will revert to quarterly. Unless the monthly reporting demonstrates that the PLU has stabilized, then the reporting party will continue to report a monthly PLU for an additional six (6) month period or until the Parties agree that the PLU has stabilized, whichever occurs first. In all other instances, the PLU reporting shall be quarterly.] [OPEN-AT&T]

Gives away

5.3.4 Percentage Interstate Usage. For combined interstate and intrastate AT&T traffic terminated by BellSouth over the same facilities, AT&T will be required to provide a projected Percentage Interstate Usage ("PIU") to BellSouth. All jurisdictional report requirements, rules and regulations for Interexchange Carriers specified in BellSouth's Intrastate Access Services Tariff will apply to AT&T. After interstate and intrastate traffic percentages have been determined by use of PIU procedures, the PLU factor will be used for application and billing of local interconnection. Notwithstanding the foregoing, where the terminating company has message recording technology that identifies the traffic terminated, such information, in lieu of the PLU factor, shall at the company's option be utilized to determine the appropriate reciprocal compensation to be paid.

5.3.5 Audits. On thirty (30) days' written notice, each Party must provide the other the ability and opportunity to conduct an annual audit of the traffic reported. BellSouth and AT&T shall retain records of call detail for a minimum of nine months from which a PLU and/or PIU can be ascertained. The audit shall be accomplished during normal business hours at an office designated by the Party being audited. Audit requests shall not be submitted more frequently than one (1) time per calendar year. Audits shall be performed by a mutually acceptable independent auditor paid for by the Party requesting the audit. The PLU and/or PIU shall be adjusted based upon the audit results and shall apply to the usage for the quarter the audit was completed, to the usage for the quarter prior to the completion of the audit, and to the usage for the two quarters following the completion of the audit. If, as a result of an audit, either Party is found to have overstated the PLU and/or PIU by twenty percentage points (20%) or more, that Party shall reimburse the auditing Party for the cost of the audit.

5.4 Compensation for IntraLATA Toll Traffic

5.4.1 IntraLATA Toll Traffic. IntraLATA Toll Traffic is defined as any telephone call that originates and terminates in the same LATA and is billed by the originating Party as a toll call.

5.4.2 Compensation for IntraLATA Toll Traffic. For terminating its IntraLATA Toll Traffic on the other Party's network, the originating Party will pay the terminating Party's intrastate or interstate terminating switched access tariff rates as set forth in the effective intrastate or interstate access services tariff, whichever is appropriate. The appropriate charges will be determined by the routing of the call. If BellSouth or AT&T is the other Party's end user's presubscribed interexchange carrier or if an end user uses BellSouth or AT&T as an interexchange carrier on a 101XXXX basis, BellSouth or AT&T will charge the other Party the appropriate tariff charges for originating switched access services.

5.4.3 Compensation for 800 Traffic. Each Party shall compensate the other pursuant to the appropriate switched access charges, including the database query charge as set forth in the each Party's intrastate or interstate switched access tariffs.

5.4.4 Records for 8YY Billing. Each Party will provide to the other the appropriate records necessary for billing intraLATA 8YY customers. Records required for billing end users purchasing 8YY Services shall be provided pursuant to Attachment 6 of this Agreement, incorporated herein by this reference.

5.4.5 Transit Traffic Service. BellSouth shall provide tandem switching and transport services for AT&T's transit traffic. Transit traffic is traffic originating on AT&T's network that is switched and/or transported by BellSouth and delivered to a third party's network, or traffic originating on a third Party's network that is switched and/or transported by BellSouth and delivered to AT&T's network . Rates for local transit traffic shall be the applicable call transport and termination charges as set forth in Exhibit A to this Attachment. Rates for intraLATA toll and Switched Access transit traffic shall be the applicable call transport and termination charges as set forth in BellSouth Interstate or Intrastate Switched Access tariffs. Switched Access transit traffic presumes that AT&T's end office is subtending the BellSouth Access Tandem for switched access traffic to and from AT&T's end users utilizing BellSouth facilities, either by direct trunks with the IXC, or via the BellSouth Access Tandem. Billing associated with all transit traffic shall be pursuant to MECAB procedures. Wireless Type 1 traffic shall not be treated as transit traffic from a routing or billing perspective. Wireless Type 2A traffic shall not be treated as transit traffic from a routing or billing perspective until BellSouth and the Wireless carrier have the capability to properly meet-point-bill in accordance with Multiple Exchange Carrier Access Billing ("MECAB") guidelines.

6. **[OSS Rates – To the extend AT&T orders a Service and Element for the purpose of interconnection, the OSS Rates set forth in Exhibit __ of Attachment 2, incorporated herein by this reference, shall apply.] [OPEN-AT&T]**

BELLSOUTH/CLEC-1 RATES
LOCAL INTERCONNECTION

DESCRIPTION	USOC	NC
LOCAL INTERCONNECTION (CALL TRANSPORT AND TERMINATION)		
End Office Switching,		
per mou (includes E.O. trunk port shared per MOU)	NA	$0.0017
Tandem Switching		
per mou (includes tandem trunk port - shared per MOU)	N/A	$0.0009
INTEROFFICE TRANSPORT		
Common (Shared) Transport		
Common (Shared) Transport per mile per mou	N/A	$0.00001
Common (Shared) Transport Facilities Termination per mou	N/A	$0.00034
Interoffice Channel Transport - Dedicated - VG		
Interoffice Transport - Dedicated - 2-Wire VG - per mile	1L;5XF	$0.0282
Interoffice Transport - Dedicated - 2-Wire VG - facilities termination per month	1L;5XF	$18.00
NRC - 1st	1L;5XF	$137.48
NRC - Add'l	1L;5XF	$52.58
NRC - Incremental Charge - Manual Service Order - 1st	SOMAC	$38.07
NRC - Incremental Charge - Manual Service Order - Add'l	SOMAC	$38.07
Interoffice Channel Transport - Dedicated - DS0 - 56/64 KBPS		
Interoffice Transport - Dedicated - DS0 - per mile per month	1L5XK	$0.0282
Interoffice Transport - Dedicated - DS0 - facility termination per month	1L5XK	$17.40
NRC - 1st	1L5XK	$137.48
NRC - Add'l	1L5XK	$52.58
NRC - Incremental Charge - Manual Service Order - 1st	SOMAC	$38.07
NRC - Incremental Charge - Manual Service Order - Add'l	SOMAC	$38.07
Interoffice Channel Transport - Dedicated - DS1		
Interoffice Transport - Dedicated - DS1 - per mile per month	1L5XL	$0.5753
Interoffice Transport - Dedicated - DS1 - facility termination per month	1L5XL	$71.29
NRC - 1st	1L5XL	$217.17
NRC - Add'l	1L5XL	$163.75
NRC - Incremental Charge - Manual Service Order - 1st	SOMAC	$38.07
NRC - Incremental Charge - Manual Service Order - Add'l	SOMAC	$38.07
Interoffice Channel Transport - Dedicated - DS3		
Interoffice Transport - Dedicated - DS3 - per mile per month	1L5XM	$12.98
Interoffice Transport - Dedicated - DS3 - facility termination per month	1L5XM	$720.38
NRC - 1st	1L5XM	$794.94
NRC - Add'l	1L5XM	$579.55
NRC - Incremental Charge - Manual Service Order - 1st	SOMAC	$91.26
NRC - Incremental Charge - Manual Service Order - Add'l	SOMAC	$91.26
Local Channel - Dedicated		
Local Channel - Dedicated - 2-Wire VG		
Monthly Recurring	TEFV2	$14.82
NRC - 1st	TEFV2	$553.80
NRC - Add'l	TEFV2	$86.69
NRC - Incremental Charge - Manual Service Order - 1st	SOMAC	$42.17
NRC - Incremental Charge - Manual Service Order - Add'l	SOMAC	$12.76
Local Channel - Dedicated - 4-Wire VG		
Monthly Recurring	TEFV4	$15.87
NRC - 1st	TEFV4	$562.23
NRC - Add'l	TEFV4	$92.67
NRC - Incremental Charge - Manual Service Order - 1st	SOMAC	$42.17
NRC - Incremental Charge - Manual Service Order - Add'l	SOMAC	$12.76
Local Channel - Dedicated - DS1		
Monthly Recurring	TEFHG	$35.68
NRC - 1st	TEFHG	$534.48
NRC - Add'l	TEFHG	$462.69
NRC - Incremental Charge - Manual Service Order - 1st	SOMAC	$86.15
NRC - Incremental Charge - Manual Service Order - Add'l	SOMAC	$1.77
Local Channel - Dedicated – DS3		
Monthly Recurring	TEFHJ	$498.87
NRC - 1st	TEFHJ	$562.25
NRC - Add'l	TEFHJ	$527.88
NRC - Incremental Charge - Manual Service Order - 1st	SOMAC	$56.25
NRC - Incremental Charge - Manual Service Order - Add'l	SOMAC	$56.25
NOTE: If no rate is identified in the contract the rate for the specific service or function will be as set forth in applicable		
BellSouth tariff or as negotiated by the parties upon request by either party.		

Preferred Interconnection Architecture

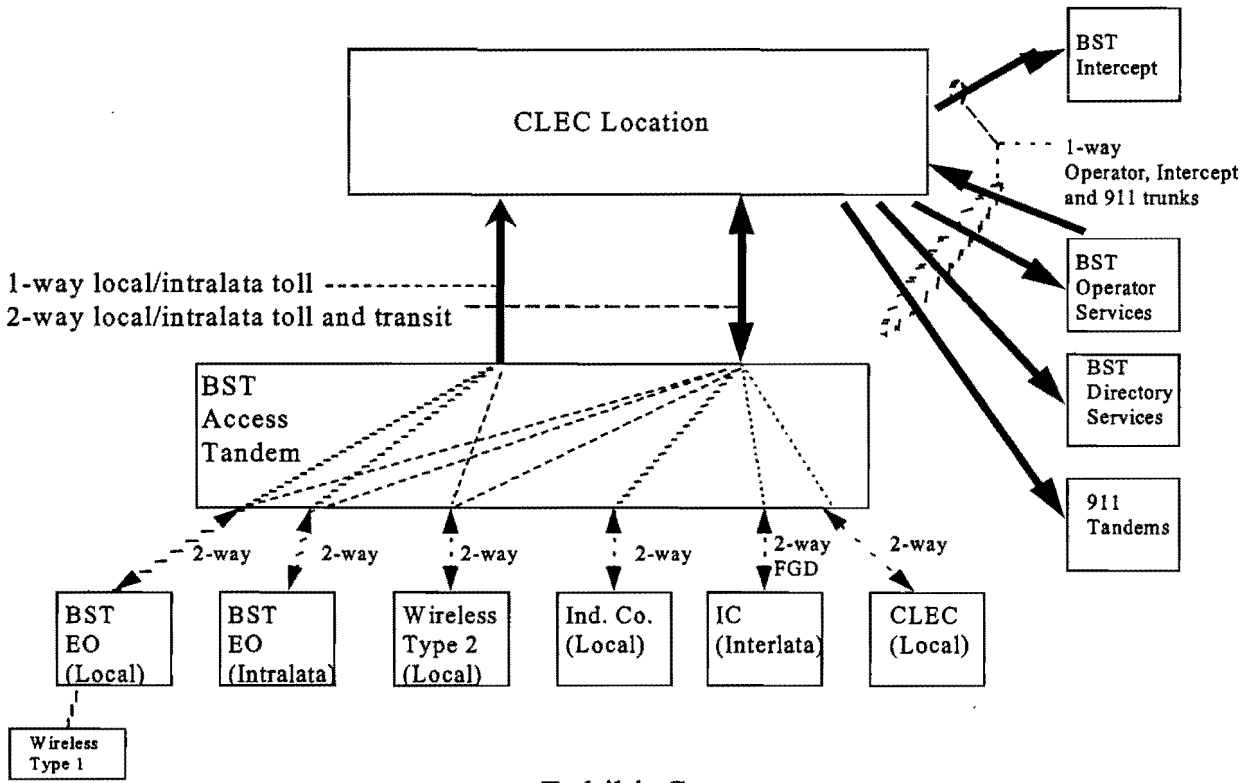

Exhibit C

One Way Trunking Interconnection

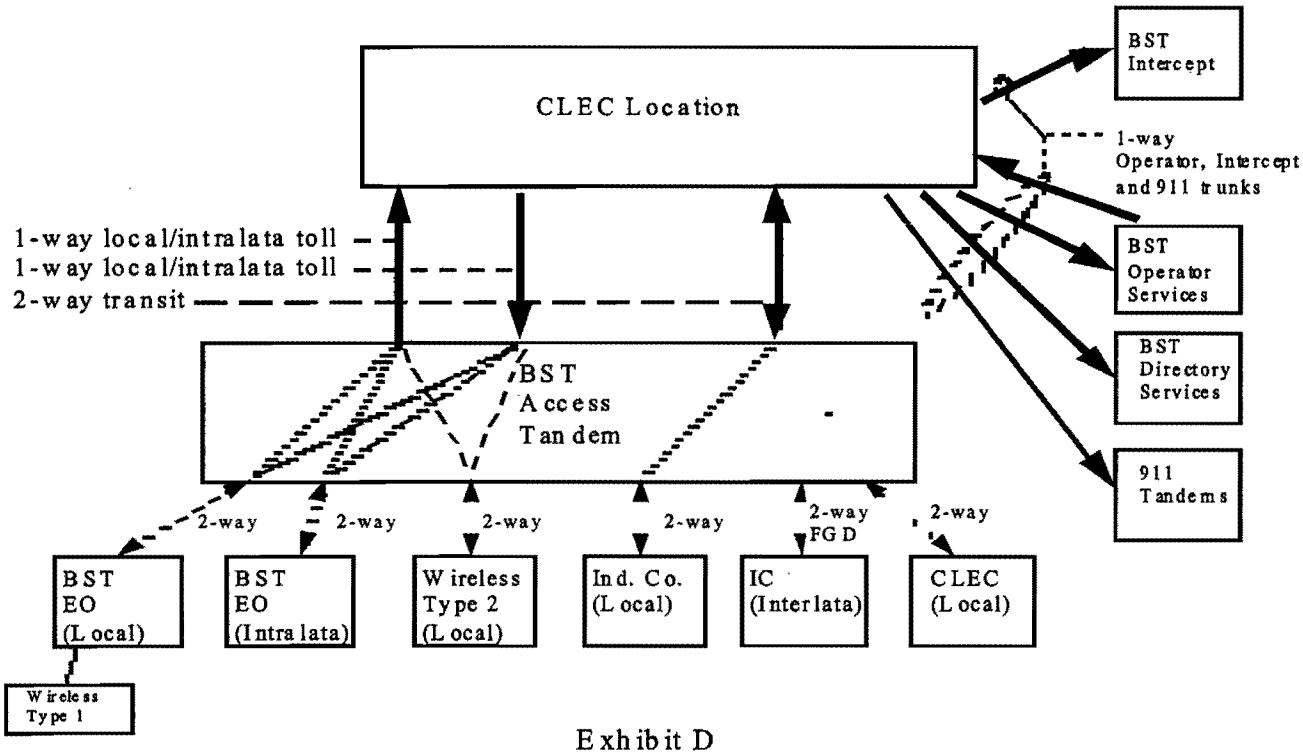

Exhibit D

Two Way Trunking Interconnection

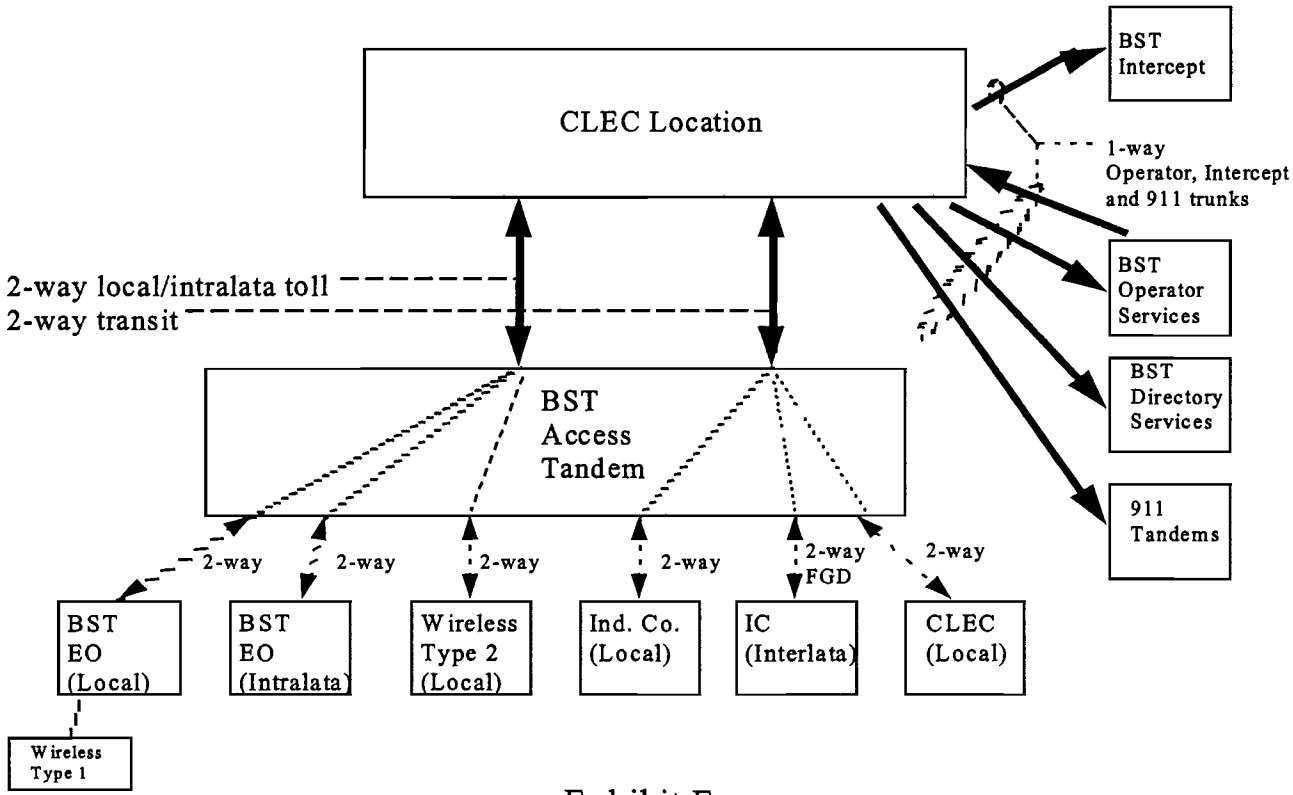

Exhibit E

SuperGroup Interconnection Architecture

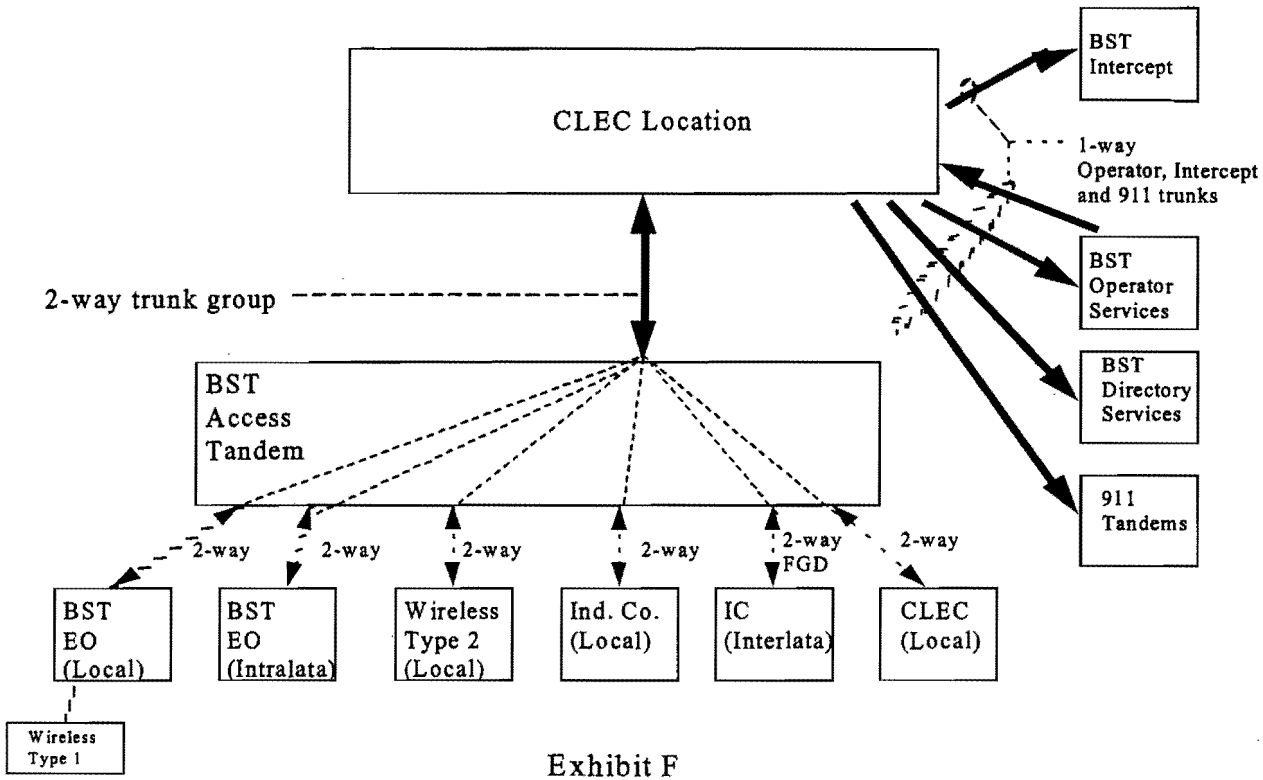

Exhibit F

ATTACHMENT 3

LOCAL INTERCONNECTION

TABLE OF CONTENTS

1. NETWORK INTERCONNECTION 1

2. METHODS OF INTERCONNECTION ..... 7~~7~~

3. INTERCONNECTION TRUNKING AND ROUTING ..... 12~~12~~

4. NETWORK DESIGN AND MANAGEMENT FOR INTERCONNECTION... 22~~22~~~~21~~

5. NETWORK MAINTENANCE ..... 29~~30~~~~29~~

6. INTERCONNECTION COMPENSATION 28

EXHIBIT A Rates for Interconnection

EXHIBIT B Space License Terms and Conditions

EXHIBIT C BellSouth Proposed Preferred Interconnection Architecture

EXHIBIT D BellSouth Proposed One Way Trunking Requirement

EXHIBIT E BellSouth Proposed Two Way Trunking Requirement

EXHIBIT F BellSouth Proposed Super Group Interconnection Architecture

LOCAL INTERCONNECTION

1 NETWORK INTERCONNECTION

1.1 The Parties shall provide interconnection with each other's network for the transmission and routing of telephone exchange service (local) and exchange access (intraLATA toll and switched access).

1.2 **DISAGREE [tied to POI arbitration issue]**

AT&T PROPOSAL

For the purpose of accessing UNEs provided by BellSouth, BellSouth shall permit AT&T to interconnect with BellSouth at any technically feasible point, including tandems, end offices, designated points of interface (facility or switch) or customer premises. Nothing in this Attachment 3 shall limit AT&T's right to interconnect with BellSouth for access to UNEs. ~~BellSouth shall provide interconnection with BellSouth's network at any technically feasible point within BellSouth's network.~~

BST PROPOSAL

BellSouth shall provide interconnection with BellSouth's network at any technically feasible point within BellSouth's network.

1.3 **DISAGREE [tied to POI & tandem switching arbitration issue]**

AT&T PROPOSAL

For the purpose of receiving Local Traffic, IntraLATA Toll Traffic, Transit Traffic and Meet Point Traffic (collectively "Interconnection Traffic") from the other party, the parties shall mutually agree to the quantity and location of the Points of Interconnection that each party will establish within each respective LATA. The Point of Interconnection ("POI") is the point at which the originating Party delivers its originated traffic to the terminating Party. The POI locations of one Party may be exactly the same, partially the same or completely different than the POI locations of the other Party.

In the event that the parties cannot reach mutual agreement as to the quantity of POIs, the default shall be the quantity of BellSouth tandems and AT&T tandems within the LATA.

In the event that the parties cannot reach mutual agreement as to the location of POIs, the default shall be the location of each Party's tandem switches.

For purposes of this Attachment 3, every AT&T switch is deemed to be a tandem switch. ~~AT&T shall provide interconnection to BellSouth at any mutually agreed upon point.~~

BST PROPOSAL

AT&T shall provide interconnection to BellSouth at any mutually agreed upon point.

1.4 **DISAGREE**

AT&T PROPOSAL

Following the establishment of the quantity and location of POIs, each Party shall specify to the other Party the POI associated with each switch it operates. The sending Party agrees to terminate its Interconnection Traffic to the POI specified by the receiving Party or, when mutually agreed to, a secondary POI identified in any jointly-developed trunk service plans.

BST PROPOSAL [modified 5/12 re:trunk group discussion]

Dave

AT&T must establish, at a minimum, a single Point of Presence, Point of Interface, and ~~Point of Interconnection~~interconnection trunk group with BellSouth within the LATA for the delivery of AT&T's originated local, intraLATA toll terminated to BellSouth and transit traffic terminated to other than BellSouth. If AT&T chooses to ~~interconnect at~~have a single ~~Point of Interconnection~~interconnection trunk group within a LATA, ~~the interconnection~~such interconnection trunk group must be at a BellSouth access or local tandem. Furthermore, AT&T must establish ~~Points of Interconnection~~interconnection trunk groups at all BellSouth access and local tandems where AT&T NXXs are "homed." A "Homing" arrangement is defined by a "Final" Trunk Group between the BellSouth access or local tandem and AT&T End Office switch. A "Final" Trunk Group is the last choice telecommunications path between the access or local tandem and End Office switch. It is AT&T's responsibility to enter its own NPA/NXX access and/or local tandem "homing" arrangements into the national Local Exchange Routing Guide ("LERG"). In order for AT&T to home its NPA/NXX(s) on a BellSouth access or local tandem, AT&T's NPA/NXX(s) must be assigned to an

exchange rate center area served by that BellSouth access or local tandem and as specified by BellSouth.

1.5 A Point of Presence is the physical location (a structure where the environmental, power, air conditioning, etc. specifications for a Party's terminating equipment can be met) at which a Party establishes itself for obtaining access to the other Party's network. The Point of Presence is the physical location within which the Point(s) of Interface occur.

1.6 A Point of Interface is the physical telecommunications interface between BellSouth and AT&T's interconnection facilities. It establishes the technical interface and point of operational responsibility. The primary purpose of the Point of Interface is to serve as the terminus for each Party's interconnection facilities. The Point of Interface has the following main characteristics:

1.6.1 It is a cross-connect point to allow connection, disconnection, transfer or restoration of service.

1.6.2 It is a point where BellSouth and AT&T can verify and maintain specific performance objectives.

MISSING 1.4.3 from 4/18 version – open to AT&T to see what happened.

~~1.6.3~~**~~The Parties will provide or will cause to be provided equipment to interface with the equipment on the customer premises. [OPEN-BST]~~**

1.7 **DISAGREE**

AT&T PROPOSAL

~~**The Point of Interconnection is the point at which the originating Party delivers its originated traffic to the terminating Party's first point of switching on the terminating Party's common (shared) network for call transport and termination. Points of Interconnection are available at either access tandems, local tandems, End Offices, or any other technically feasible point, as described in this Agreement. AT&T's requested Point of Interconnection will also be used for the receipt and delivery of transit traffic at BellSouth access and local tandems. Points of Interconnection established at the BellSouth local tandem apply only to AT&T-originated local and local originating and terminating transit traffic.**~~

BST PROPOSAL[**modified 5/12 re:trunk group discussion**]

~~The Point of Interconnection is the point at which the originating Party delivers its originated traffic to the terminating Party's first point of switching on the terminating Party's common (shared) network for call transport and termination. Points of Interconnection~~Interconnection trunk groups are available at either access tandems, local tandems, End Offices, or any other technically feasible point, as described in this Agreement. AT&T's requested ~~Point of Interconnection~~interconnection trunk group will also be used for the receipt and delivery of transit traffic at BellSouth access and local tandems. ~~Points of Interconnection~~Interconnection trunk groups established at the BellSouth local tandem apply only to AT&T-originated local and local originating and terminating transit traffic.

1.8 The Parties will work cooperatively to establish the most efficient trunking network in accordance with the provisions set forth in this Attachment 3 and accepted industry practices.

1.9 Each party will be responsible for engineering its network (i.e., the underlying facilities on which trunks are provisioned) and providing any necessary equipment on its side of the Point of Interface. Each Party shall establish Points of Presence and Points of Interface for the delivery of its originated local and intraLATA toll traffic to the other Party. ~~The Point of Interface may not necessarily be established at the Point of Interconnection.~~

1.10 **DISAGREE**

AT&T PROPOSAL

~~BellSouth shall designate the Points of Presence and Points of Interface for the delivery of its originated local and intraLATA toll traffic to AT&T for call transport and termination by AT&T.~~

BST PROPOSAL

BellSouth shall designate the Points of Presence and Points of Interface for the delivery of its originated local and intraLATA toll traffic to AT&T for call transport and termination by AT&T.

1.11 **DISAGREE**

AT&T PROPOSAL

~~For the purposes of this Attachment 3, Local Channel is defined as a switch transport facility between a Party's Point of Presence and its designated serving wire center.~~

BST PROPOSAL

For the purposes of this Attachment 3, Local Channel is defined as a switch transport facility between a Party's Point of Presence and its designated serving wire center.

1.12 For the purposes of this Attachment 3, Serving Wire Center is defined as the wire center owned by one Party from which the other Party would normally obtain dial tone for its Point of Presence.

1.13 **DISAGREE**

AT&T PROPOSAL

For the purposes of this Attachment 3, Dedicated Transport is defined as a **transport facility between two points specified by the requesting Party.**

BST PROPOSAL

For the purposes of this Attachment 3, Dedicated Transport is defined as a **switch transport facility between a Party's designated serving wire center and the first point of switching on the other Party's common (shared) network.**

1.14 Prices for interconnection facilities are contained in Exhibit A to this Attachment.

2 METHODS OF INTERCONNECTION

2.1 The Parties shall interconnect their networks utilizing one of the following methods in accordance with the provisions set forth in this Attachment 3.

2.1.1 Interconnection by one Party at the premises of the other Party.

2.1.2 BellSouth shall provide collocation to AT&T pursuant to the terms set forth in Attachment 4 of this Agreement, incorporated herein by this reference. AT&T may, at its option, purchase such collocation at the rates, terms, and conditions set forth in Attachment 4 of this Agreement, incorporated herein by this reference.

2.1.3 **DISAGREE**

AT&T PROPOSAL

AT&T, at its sole discretion, may permit BellSouth to utilize space and power in AT&T facilities specified by AT&T solely for the purpose of

terminating BellSouth's **Interconnection Traffic.** BellSouth may request installation of both cable and equipment, or cable only. The pricing, terms and conditions of such arrangement shall be pursuant to Exhibit B of this Attachment 3, incorporated herein by this reference.

BST PROPOSAL

AT&T, at its sole discretion, may permit BellSouth to utilize space and power in AT&T facilities specified by AT&T solely for the purpose of terminating BellSouth's **local traffic**. BellSouth may request installation of both cable and equipment, or cable only. The pricing, terms and conditions of such arrangement shall be pursuant to Exhibit B of this Attachment 3, incorporated herein by this reference.

~~1.1.4~~2.1.4 Leased Facilities – where the Party requesting interconnection utilizes the facilities offered by the other Party. Such leased facilities shall be provided at the rates, terms, and conditions set forth in this Attachment 3. At AT&T's request, it may lease separate facilities for the sole purpose of delivering undipped 8YY traffic from AT&T's end users to BellSouth's Switching Services Port ("SSP") for dipping into BellSouth's toll free database.

2.1.5 Third Party Facilities – where the Party requesting interconnection utilizes the facilities provided by a source other than the Parties to this Agreement. The Party utilizing this option shall comply with industry standards to maintain network integrity and will be solely responsible for any charges or fees assessed by the third party for use of its facilities.

2.1.6 Commercial Intra-building Interconnection – where both Parties have constructed broadband facilities into a commercial building (i.e., a building that is not a telephone central office) and agree to establish a Point of Interface at such location utilizing intra-building cable.

2.1.7 "Fiber Meet" is an interconnection arrangement whereby the Parties physically interconnect their networks via an optical fiber interface (as opposed to an electrical interface), at which one Party's facilities, provisioning, and maintenance responsibility begins and the other Party's responsibility ends (i.e., Point of Interface). A Fiber Meet shall be an arrangement as set forth in Section 2.3 of this Attachment 3.

2.1.8 Any other method determined to be technically feasible and requested by AT&T shall be done pursuant to the process defined in Attachment 14 of this Agreement, incorporated herein by this reference. Any other method determined to be technically feasible and requested by BellSouth and agreed to by AT&T shall be done~~, pursuant to~~ [redacted] ~~[OPEN-AT&T]~~

2.2 **DISAGREE**

AT&T PROPOSAL

~~Local Tandem Interconnection. This interconnection arrangement allows AT&T to establish a Point of Interconnection at BellSouth local tandems for: (1) the delivery of AT&T-originated local traffic transported and terminated by BellSouth to BellSouth end offices within the local calling area as defined in BellSouth's General Subscriber Services Tariff, Section A3 served by those BellSouth local tandems; and (2) for local transit traffic transported by BellSouth for third party network providers who have also established Points of Interconnection at those BellSouth local tandems.~~

BST PROPOSAL[modified 5/12 re: trunk group discussion]

Local Tandem Interconnection. This interconnection arrangement allows AT&T to establish ~~a Point of Interconnection~~interconnection trunk group(s) at BellSouth local tandems for: (1) the delivery of AT&T-originated local traffic transported and terminated by BellSouth to BellSouth end offices within the local calling area as defined in BellSouth's General Subscriber Services Tariff, Section A3 served by those BellSouth local tandems; and (2) for local transit traffic transported by BellSouth for third party network providers who have also established an interconnection trunk group(s)~~Points of Interconnection~~ at those BellSouth local tandems.

~~1.1.1~~2.2.1 **DISAGREE**

AT&T PROPOSAL

When a specified local calling area is served by more than one BellSouth local tandem, AT&T must designate a "home" local tandem for each of its assigned NPA/NXXs and establish trunk connections to such local tandems. Additionally, AT&T may choose to establish a Point of Interconnection at the BellSouth local tandems where it has no codes homing but is not required to do so. **~~AT&T may deliver local traffic to a "home" BellSouth local tandem that is destined for other BellSouth or third party network provider end offices subtending other BellSouth local tandems in the same local calling area where AT&T does not choose to establish a Point of Interconnection.~~** It is AT&T's responsibility to enter its own NPA/NXX local tandem homing arrangements into the LERG either directly or via a vendor in order for other third party network providers to determine

appropriate traffic routing to AT&T's codes. Likewise, AT&T shall obtain its routing information from the LERG.

BST PROPOSAL[modified 5/12 re:trunk group discussion]

When a specified local calling area is served by more than one BellSouth local tandem, AT&T must designate a "home" local tandem for each of its assigned NPA/NXXs and establish trunk connections to such local tandems. Additionally, AT&T may choose to establish an interconnection trunk group(s) ~~Point of Interconnection~~ at the BellSouth local tandems where it has no codes homing but is not required to do so. **AT&T may deliver local traffic to a "home" BellSouth local tandem that is destined for other BellSouth or third party network provider end offices subtending other BellSouth local tandems in the same local calling area where AT&T does not choose to establish an interconnection trunk group(s) ~~Point of Interconnection~~.** It is AT&T's responsibility to enter its own NPA/NXX local tandem homing arrangements into the LERG either directly or via a vendor in order for other third party network providers to determine appropriate traffic routing to AT&T's codes. Likewise, AT&T shall obtain its routing information from the LERG.

~~1.1.2~~2.2.2 Notwithstanding establishing ~~Points of Interconnection~~interconnection trunk group(s) to BellSouth's local tandems, AT&T must also establish interconnection trunk group(s)~~Points of Interconnection~~ to BellSouth access tandems within the LATA on which AT&T has NPA/NXX's homed for the delivery of Interexchange Carrier Switched Access ("SWA") and toll traffic, and traffic to Type 2A CMRS connections located at the access tandems. BellSouth cannot switch SWA traffic through more than one BellSouth access tandem. SWA, Type 2A CMRS or toll traffic routed to the local tandem in error will not be backhauled to the BellSouth access tandem for completion. (Type 2A CMRS interconnection is defined in BellSouth's General Subscriber Services Tariff, Section A35.)

OK

2.2.3 **DISAGREE**

AT&T PROPOSAL

~~**Bell South's provisioning of local tandem interconnection assumes that AT&T has the necessary local interconnection arrangement with the other third party network providers subtending those local tandems as required by the Act.**~~

BST PROPOSAL

Bell-South's provisioning of local tandem interconnection assumes that AT&T has the necessary local interconnection arrangement with the other third party network providers subtending those local tandems as required by the Act.

~~1.3~~2.3 Fiber Meet

2.3.1 If AT&T elects to establish a POI with BellSouth pursuant to a Fiber Meet, AT&T and BellSouth shall jointly engineer and operate a Synchronous Optical Network ("SONET") transmission system by which they shall interconnect their transmission and routing of local traffic via a facility at either the DS1, or DS3 level and shall be ordered via an Access Services Request ("ASR") in the initial phase of this offering. The Parties shall work jointly to determine the specific transmission system. The parties will work cooperatively to establish joint access to transmission overhead signals and commands for such facilities and software. However, AT&T's SONET transmission must be compatible with BellSouth's equipment in the serving wire center. The Parties will work cooperatively in the selection of compatible transmission equipment and software. Fiber Meet will be used for the provision of two-way trunking unless otherwise agreed to by the Parties.

2.3.2 BellSouth shall, wholly at its own expense, procure, install and maintain the agreed upon SONET equipment in the BellSouth Serving Wire Center ("BSWC").

2.3.3 AT&T shall, wholly at its own expense, procure, install and maintain the agreed upon SONET equipment in the AT&T Serving Wire Center ("ASWC").

2.3.4 The parties shall mutually agree upon a Point of Interface as a Fiber Meet point and shall make all necessary preparations to receive and to allow and enable delivery of fiber optic facilities into the Point of Interface with sufficient spare length to reach the Point of Interface. A Common Language Location Identification ("CLLI") code will be established for each Point of Interface. The code established must be a building type code. All orders shall originate from the Point of Interface (i.e., Point of Interface to AT&T or Point of Interface to BellSouth).

2.3.5 The Parties shall deliver and maintain their own strands wholly at their own expense. Upon verbal request by either Party, the other Party shall allow access to the Fiber Meet entry point for maintenance purposes as promptly as possible.

2.3.6 The Parties shall jointly coordinate and undertake maintenance of the SONET transmission system. Each Party shall be responsible for maintaining the components of their own SONET transmission system.

2.3.7 Each Party will be responsible for (i) providing its own transport facilities to the Fiber Meet, and (ii) the cost to build-out its facilities to such Fiber Meet.

2.3.8 Neither Party shall charge the other for its portion of the Fiber Meet facility between the ASWC and the BSWC used exclusively for the other Party's local traffic (i.e., the Local Channel). The Parties do not intend to utilize this arrangement for transit traffic.

3 INTERCONNECTION TRUNKING AND ROUTING

3.1 The parties will establish separate trunk groups as follows:

3.1.1 Exchange Service Interconnection Traffic ("ESIT") trunk groups will be established to carry combined local and intraLATA toll traffic. ESIT means traffic that is originated by an end user of one Party and terminates to an end user of the other Party within a given LATA. Unless the Parties mutually agree otherwise, ESIT trunk groups shall be one-way terminating trunks.

3.1.2 Two-way Meet Point Traffic trunk groups will be established to carry Switched Access traffic for third-party IXC customers.

3.1.3 Two-way Transit Traffic trunk groups will be established to carry traffic between AT&T and third party CLECs or ILECs other than BellSouth. The Parties agree that Meet Point Traffic and Transit Traffic may be combined on a single trunk group at AT&T's request.

3.1.4 At AT&T's request, one-way Meet Point Traffic trunks will be established by the Parties to enable AT&T to deliver undipped 8YY traffic from AT&T Customers to the LEC SSP for dipping in the Industry Toll Free Data Base. All originating toll free service calls for which AT&T requests that the BellSouth perform the SSP function (e.g., perform the database query) shall be delivered to BellSouth, using an agreed upon signaling format. This can be either GR-394-CORE format with Carrier Code "0110" and Circuit Code of "08" or GR-317-CORE format. Charges for dipping and transport to the IXC will be billed in accordance with MECOD/MECAB guidelines.

3.1.5 Special use trunks (e.g., 911, choke) will be established in accordance with this Section [ ].

3.2 The Parties will convert all existing interconnection arrangements and trunks to the interconnection arrangements described in this Attachment in accordance with the following:

3.2.1 **Within 45 days ~~of the Effective Date~~ of either Party's request, the Parties will mutually develop an operations plan based on sound engineering and operations principles, which will specify the guidelines to convert from the existing interconnection arrangements to the interconnection arrangements described in this Attachment 3. Such guidelines will conform to standard industry practices adopted by and contained in documents published by Industry Forums, including but not limited to, the Alliance for Telecommunications Industry Solutions ("ATIS") and the Ordering and Billing Forum ("OBF").**

3.2.2 **Each Party shall bear its own costs to convert from the existing interconnection arrangements to the interconnection arrangements described in this Attachment.**

3.2.3 **Unless otherwise mutually agreed, the Parties will complete the conversion within one (1) year of the Effective Date of the Agreement.**

3.2.4 **If, following one (1) year after the ~~Effective Date~~ written request of Party's of the Agreement, there exists any interconnection trunks which have not been converted to the interconnection arrangements described in this Attachment 3, then either Party may invoke the dispute resolution process, pursuant to Section 16 of the General Terms and Conditions of this Agreement, incorporated herein by this reference. [OPEN-BST/AT&T]**

3.3 The Parties will use the following interconnection standards:

3.3.1 The Parties agree to establish Binary 8 Zero Sum Extended Superframe line protocol, where technically feasible.

3.3.2 In those cases where either Party's equipment will not support 64K Clear Channel Capability ("CCC"), the Parties agree to establish AMI line coding. Any AMI line coding will be Superframe formatted. DS3 facilities will be provisioned with C-bit parity.

3.3.3 Where additional equipment is required, such equipment shall be obtained, engineered, and installed to support 64K CCC trunks.

3.3.4 All interconnection facilities between the Parties will be sized according to mutual forecasts developed per the requirements of Section 4.8 of this Attachment 3 and sound engineering practices.

3.3.5 Interconnection will be provided utilizing either a DS1 or DS3 interface or, with the mutual agreement of the Parties, another technically feasible interface (e.g., STS-1).

3.3.6 BellSouth and AT&T shall establish interconnecting trunk groups and trunking configurations between networks including the establishment of one-way or two-way trunks. AT&T mark Exh L-E. No to reverse it will include.

3.3.7 All terms and conditions, as well as charges, both non-recurring and recurring, associated with interconnecting trunk groups between BellSouth and AT&T not addressed in Exhibit A shall be as set forth in the appropriate Party's intrastate or interstate tariff for switched access services. For two-way trunking that carries the Parties' local and intraLATA toll traffic, excluding transit traffic, the Parties shall be compensated for the nonrecurring and recurring charges for trunks and DS1 facilities at 50% of the applicable contractual or tariff rates for the services provided by each Party. AT&T shall be responsible for ordering and paying for any two-way trunks carrying transit traffic.

3.4 O/K All originating toll free service calls for which the end office Party performs the SSP function, if delivered to the tandem Party, shall be delivered by the end office Party using GR-394 CORE format for IXC bound calls, or using GR-317-CORE format for LEC bound calls.

3.5 **Originating Feature Group B calls delivered to either Party's tandem shall use GR-317-CORE signaling format unless the associated FGB carrier employs GR-394-CORE signaling for its FGB traffic at the serving access tandem. [OPEN-BST]**

3.6 The Parties shall deliver over any trunk groups groomed for a specific access tandem only traffic destined for those publicly-dialable NPA NXX codes served by: (1) end offices that directly subtend the access tandem; and (2) those providers (including, but not limited to CMRS providers, other independent LECs, and CLECs) that directly connect to the access tandem.

3.7 For BellSouth end offices that do not normally subtend tandem for which calls are routed to that end office on an alternate routing basis, BellSouth will provide AT&T its alternative routing (scheme) arrangements. Where BellSouth utilizes alternative arrangements, it shall deliver any traffic through that alternative routing.

3.8 The Parties shall deliver over any trunk groups groomed for a specific end office only traffic destined for those publicly-dialable NPA NXX codes served by that end office, unless otherwise agreed to by the Parties.

3.9 The source for the routing information for all traffic shall be the LERG, unless otherwise agreed to between the Parties.

3.10 Where either Party delivers over the local traffic trunk groups miscellaneous calls (e.g., time, weather, 976) destined for the other Party, it shall deliver such traffic in accordance with the serving arrangements defined in the LERG.

3.11 The Parties will cooperate to establish separate, choke trunk groups for the completion of calls to end users such as radio contest lines. Notwithstanding the foregoing, the Parties agree that where the Parties' switch has the capability to perform call gapping and other protective network traffic management controls, separate trunk groups shall not be required to carry such traffic.

3.12 N11 code traffic shall be routed between the Parties' networks pursuant to accepted industry practice (e.g., over local traffic trunks or over separate trunk groups).

3.13 Each Party shall establish procedures whereby its operator bureau will coordinate with the operator bureau of the other Party in order to provide Busy Line Verification/Busy Line Verification Interrupt services on calls between their respective line side end users for numbers that are not ported.

3.14 A blocking standard of one-half of one percent (.005) shall be maintained during the average busy hour for final trunk groups carrying jointly provided exchange access traffic between an end office and an access tandem. All other final trunk groups are to be engineered with a blocking standard of one percent (.01). High usage trunk groups shall be sized to an economic CCS parameter mutually agreed to by both Parties.

3.14.1 BellSouth agrees to provide upon request of AT&T, pursuant to Attachment 6 of this Agreement, traffic usage data (including, but not limited to, usage, peg and overflow counts) for each AT&T NXX subtending the BellSouth tandem to determine which AT&T traffic by NXX is being blocked.

3.14.2 Pursuant to Attachment 9, incorporated herein by this reference, BellSouth shall report to AT&T information regarding blocking of interconnection traffic.

3.15 The Parties agree to jointly manage the capacity of interconnection trunk groups to encourage the economic deployment of increasingly robust and diverse interconnection between their networks.

DISAGREE

AT&T PROPOSAL

~~1.16~~3.16 ~~**BellSouth Access Tandem Interconnection Architectures**~~

3.16.1 ~~**BellSouth Access Tandem Interconnection provides intratandem access to subtending end offices.**~~

3.17 ~~**Preferred Trunking Interconnection**~~

3.17.1 ~~**In this interconnection architecture AT&T's originating Local and IntraLATA Toll and originating and terminating Transit Traffic is transported on a single two-way trunk group between AT&T and BellSouth access tandem(s) within a LATA. This group carries intratandem Transit Traffic between AT&T and Independent Companies, Interexchange Carriers, other CLECs and other network providers with which AT&T desires interconnection and has the proper contractual arrangements. This group also carries AT&T originated intertandem traffic transiting a single BellSouth access tandem destined to third party tandems such as an Independent Company tandem or other CLEC tandem. BellSouth originated Local and IntraLATA Toll traffic is transported on a single one-way trunk group terminating to AT&T. The Two-way Trunking Rules, described in this Agreement, do not apply to this architecture. Other trunk groups for operator services, directory assistance, emergency services and intercept may be established if required. The LERG should be referenced for current routing and tandem serving arrangements. The Preferred Trunking Interconnection architecture is illustrated in Exhibit C.**~~

3.18 ~~**One Way Trunking Interconnection**~~

3.18.1 ~~**In this arrangement, the Parties interconnect using two one-way trunk groups. One one-way trunk group carries AT&T-originated local and intraLATA toll traffic destined for BellSouth end-users. The other one-way trunk group carries BellSouth-originated local and intraLATA toll traffic destined for AT&T end-users. A third two-way trunk group is established for AT&T's originating and terminating Transit Traffic. This group carries intratandem Transit Traffic between AT&T and Independent Companies, Interexchange Carriers, other CLECs and other network providers with which AT&T desires interconnection and has the proper contractual arrangements. This group also carries AT&T originated intertandem traffic transiting a single BellSouth access tandem destined to third party tandems such as an Independent Company tandem or other CLEC tandem. Other trunk groups for operator services, directory assistance, emergency services and**~~

~~intercept may be established if required. The LERG should be referenced for current routing and tandem serving arrangements. One Way Trunking Interconnection is illustrated in Exhibit D.~~

3.19 ~~Two-Way Trunking Interconnection~~

3.19.1 ~~Two-Way Trunking Interconnection establishes one two-way trunk group to carry local and intraLATA toll traffic between AT&T and BellSouth. To establish this type of configuration, AT&T and BellSouth must agree to the Two-way Trunking Rules. In addition, a two-way transit trunk group must be established for AT&T's originating and terminating Transit Traffic. This group carries intratandem Transit Traffic between AT&T and Independent Companies, Interexchange Carriers, other CLECs and other network providers with which AT&T desires interconnection and has the proper contractual arrangements. This group also carries AT&T originated intertandem traffic transiting a single BellSouth access tandem destined to third party tandems such as an Independent Company tandem or other CLEC tandem. Other trunk groups for operator services, directory assistance, emergency services and intercept may be established if required. The LERG should be referenced for current routing and tandem serving arrangements. Two-Way Trunk Interconnection is illustrated in Exhibit E.~~

3.20 ~~Supergroup Interconnection~~

3.20.1 ~~In the Supergroup Interconnection arrangement, the Parties Local and IntraLATA Toll and AT&T's Transit Traffic is exchanged on a single two-way trunk group between AT&T and BellSouth. AT&T and BellSouth must agree to the Two-way Trunking Rules in order to establish this architecture. This group carries intratandem Transit Traffic between AT&T and Independent Companies, Interexchange Carriers, other CLECs and other network providers with which AT&T desires interconnection and has the proper contractual arrangements. This group also carries AT&T originated intertandem traffic transiting a single BellSouth access tandem destined to third party tandems such as an Independent Company tandem or other CLEC tandem. Other trunk groups for operator services, directory assistance, emergency services and intercept may be established if required. The LERG should be referenced for current routing and tandem serving arrangements. Supergroup Interconnection is illustrated in Exhibit F.~~

3.21 ~~Two-Way Trunking Rules:~~

3.21.1 ~~AT&T will initiate two-way trunk request, and BellSouth will concur. However, two-way trunks will be jointly provisioned.~~

3.21.2 ~~The Point of Interface will be located at a mutually agreed location or point designated by BellSouth. If an agreement cannot be reached on the location of the Point of Interface, each company will establish its own Point of Interface and order one-way trunks.~~

3.21.3 ~~BellSouth and AT&T will jointly review the trunk forecast, as needed, on a periodic basis, or at least every six (6) months.~~

3.21.4 ~~AT&T will order trunks using ASR process in place for Local Interconnection after the joint planning meeting takes place between BellSouth and AT&T.~~

3.21.5 ~~BellSouth and AT&T must agree on Standard Traffic Engineering parameters that will be used in the engineering of the trunk groups.~~

3.21.6 ~~BellSouth and AT&T must agree to meet and resolve service-affecting situations in a timely manner. This contact will normally be made through the Account Team.~~

3.21.7 ~~Establishing a two-way trunk group does not preclude BellSouth or AT&T from adding one-way trunk groups within the same Local Calling Area.~~

3.21.8 ~~For technical reasons, two-way trunk groups may not be ordered to a BellSouth DMS100 Local Tandem or DMS100 End Office.~~

3.21.9 ~~BellSouth will be responsible for the installation and maintenance of its trunks and facilities to the mutually agreed Point of Interface, and AT&T will be responsible for the installation and maintenance of its trunks and facilities to the mutually agreed to Point of Interface.~~

3.22 ~~BellSouth End Office Interconnection~~

3.22.1 ~~AT&T may establish interconnection at BellSouth end offices for the delivery of AT&T originated local and intralata toll traffic destined for BellSouth end-users served by that end-office.~~

3.22.2 ~~When end office trunking is ordered by BellSouth to deliver BellSouth originated traffic to AT&T, BellSouth will provide overflow routing through BellSouth tandems consistent with how BellSouth overflows it's traffic. The overflow will be based on the homing arrangements AT&T displays in the LERG. Likewise, if~~

The following trunking arrangements are available for

~~AT&T interconnects to a BellSouth end office for delivery of AT&T originated traffic, AT&T will overflow the traffic through the BellSouth tandems based on the BellSouth homing arrangements shown in the LERG.~~

BST PROPOSAL

~~1.23~~3.23 BellSouth Access Tandem Interconnection Architectures

3.23.1 **BellSouth Access Tandem Interconnection provides intratandem access to subtending end offices.**

3.24 **Preferred Trunking Interconnection**

3.24.1 **In this interconnection architecture AT&T's originating Local and IntraLATA Toll and originating and terminating Transit Traffic is transported on a single two-way trunk group between AT&T and BellSouth access tandem(s) within a LATA. This group carries intratandem Transit Traffic between AT&T and Independent Companies, Interexchange Carriers, other CLECs and other network providers with which AT&T desires interconnection and has the proper contractual arrangements. This group also carries AT&T originated intertandem traffic transiting a single BellSouth access tandem destined to third party tandems such as an Independent Company tandem or other CLEC tandem. BellSouth originated Local and IntraLATA Toll traffic is transported on a single one-way trunk group terminating to AT&T. The Two-way Trunking Rules, described in this Agreement, do not apply to this architecture. Other trunk groups for operator services, directory assistance, emergency services and intercept may be established if required. The LERG should be referenced for current routing and tandem serving arrangements. The Preferred Trunking Interconnection architecture is illustrated in Exhibit C.**

3.25 **One Way Trunking Interconnection**

3.25.1 **In this arrangement, the Parties interconnect using two one-way trunk groups. One one-way trunk group carries AT&T-originated local and intraLATA toll traffic destined for BellSouth end-users. The other one-way trunk group carries BellSouth-originated local and intraLATA toll traffic destined for AT&T end-users. A third two-way trunk group is established for AT&T's originating and terminating Transit Traffic. This group carries intratandem Transit Traffic between AT&T and Independent Companies, Interexchange Carriers, other CLECs and other network providers with which AT&T desires interconnection and has the proper**

contractual arrangements. This group also carries AT&T originated intertandem traffic transiting a single BellSouth access tandem destined to third party tandems such as an Independent Company tandem or other CLEC tandem. Other trunk groups for operator services, directory assistance, emergency services and intercept may be established if required. The LERG should be referenced for current routing and tandem serving arrangements. One Way Trunking Interconnection is illustrated in Exhibit D.

3.26 **Two-Way Trunking Interconnection**

3.26.1 **Two-Way Trunking Interconnection establishes one two-way trunk group to carry local and intraLATA toll traffic between AT&T and BellSouth. To establish this type of configuration, AT&T and BellSouth must agree to the Two-way Trunking Rules. In addition, a two-way transit trunk group must be established for AT&T's originating and terminating Transit Traffic. This group carries intratandem Transit Traffic between AT&T and Independent Companies, Interexchange Carriers, other CLECs and other network providers with which AT&T desires interconnection and has the proper contractual arrangements. This group also carries AT&T originated intertandem traffic transiting a single BellSouth access tandem destined to third party tandems such as an Independent Company tandem or other CLEC tandem. Other trunk groups for operator services, directory assistance, emergency services and intercept may be established if required. The LERG should be referenced for current routing and tandem serving arrangements. Two-Way Trunk Interconnection is illustrated in Exhibit E.**

3.27 **Supergroup Interconnection**

3.27.1 **In the Supergroup Interconnection arrangement, the Parties Local and IntraLATA Toll and AT&T's Transit Traffic is exchanged on a single two-way trunk group between AT&T and BellSouth. AT&T and BellSouth must agree to the Two-way Trunking Rules in order to establish this architecture. This group carries intratandem Transit Traffic between AT&T and Independent Companies, Interexchange Carriers, other CLECs and other network providers with which AT&T desires interconnection and has the proper contractual arrangements. This group also carries AT&T originated intertandem traffic transiting a single BellSouth access tandem destined to third party tandems such as an Independent Company tandem or other CLEC tandem. Other trunk groups for operator services, directory assistance, emergency services and intercept may be established if required. The LERG should be**

referenced for current routing and tandem serving arrangements. Supergroup Interconnection is illustrated in Exhibit F.

3.28 **Two-Way Trunking Rules:**

3.28.1 **AT&T will initiate two-way trunk request, and BellSouth will concur. However, two-way trunks will be jointly provisioned.**

3.28.2 **The Point of Interface will be located at a mutually agreed location or point designated by BellSouth. If an agreement cannot be reached on the location of the Point of Interface, each company will establish its own Point of Interface and order one-way trunks.**

3.28.3 **BellSouth and AT&T will jointly review the trunk forecast, as needed, on a periodic basis, or at least every six (6) months.**

3.28.4 **AT&T will order trunks using ASR process in place for Local Interconnection after the joint planning meeting takes place between BellSouth and AT&T.**

3.28.5 **BellSouth and AT&T must agree on Standard Traffic Engineering parameters that will be used in the engineering of the trunk groups.**

3.28.6 **BellSouth and AT&T must agree to meet and resolve service-affecting situations in a timely manner. This contact will normally be made through the Account Team.**

3.28.7 **Establishing a two-way trunk group does not preclude BellSouth or AT&T from adding one-way trunk groups within the same Local Calling Area.**

3.28.8 **For technical reasons, two-way trunk groups may not be ordered to a BellSouth DMS100 Local Tandem or DMS100 End Office.**

3.28.9 **BellSouth will be responsible for the installation and maintenance of its trunks and facilities to the mutually agreed Point of Interface, and AT&T will be responsible for the installation and maintenance of its trunks and facilities to the mutually agreed to Point of Interface.**

3.29 **BellSouth End Office Interconnection**

3.29.1 **AT&T may establish interconnection at BellSouth end offices for the delivery of AT&T originated local and intralata toll traffic destined for BellSouth end-users served by that end-office.**

When end office trunking is ordered by BellSouth to deliver BellSouth originated traffic to AT&T, BellSouth will provide overflow routing through BellSouth tandems consistent with how BellSouth overflows it's traffic. The overflow will be based on the homing arrangements AT&T displays in the LERG. Likewise, if AT&T interconnects to a BellSouth end office for delivery of AT&T originated traffic, AT&T will overflow the traffic through the BellSouth tandems based on the BellSouth homing arrangements shown in the LERG.

4 NETWORK DESIGN AND MANAGEMENT FOR INTERCONNECTION

4.1 Network Management and Changes. Both Parties will work cooperatively with each other to install and maintain the most effective and reliable interconnected telecommunications networks, including but not limited to, the exchange of toll-free maintenance contact numbers and escalation procedures. Both Parties agree to provide public notice of changes in the information necessary for the transmission and routing of services using its local exchange facilities or networks, as well as of any other changes that would affect the interoperability of those facilities and networks.

4.2 Interconnection Technical Standards. The interconnection of all networks will be based upon accepted industry/national guidelines for transmission standards and traffic blocking criteria. Interconnecting facilities shall conform, at a minimum, to the technical specifications set forth in the applicable industry standard technical references. Signal transfer point, Signaling System 7 ("SS7") connectivity is required at each interconnection point. BellSouth will provide out-of-band signaling using Common Channel Signaling Access Capability where technically and economically feasible, in accordance with the technical specifications set forth in the applicable industry standard technical references. Facilities of each Party shall provide the necessary on-hook, off-hook answer and disconnect supervision and shall hand off calling number ID (Calling Party Number) when technically feasible.

4.3 Quality of Interconnection. The local interconnection for the transmission and routing of telephone exchange service and exchange access that each Party provides to each other will be at least equal in quality to what it provides to itself and any subsidiary or affiliate, where technically feasible, or to any other Party to which each Party provides local interconnection.

4.4 Common Channel Signaling. Both Parties will provide LEC-to-LEC Common Channel Signaling ("CCS") to each other, where available, in

conjunction with all traffic in order to enable full interoperability of CLASS features and functions except for call return. All CCS signaling parameters will be provided, including automatic number identification ("ANI"), originating line information ("OLI") calling company category, charge number, etc. All privacy indicators will be honored, and each Party will cooperate with each other on the exchange of Transactional Capabilities Application Part ("TCAP") messages to facilitate full interoperability of CCS-based features between the respective networks. The Parties will provide all line information signaling parameters including, but not limited to, Calling Party Number, Charge Number (if it is different from calling party number), and originating line information ("OLI"). For terminating FGD, either Party will pass any CPN it receives from other carriers. All privacy indicators will be honored. Where available, network signaling information such as Transit Network Selection ("TNS") parameter (SS7 environment) will be provided by the end office Party wherever such information is needed for call routing or billing. Where TNS information has not been provided by the end office Party, the tandem Party will route originating exchange access traffic to the IXC using available translations. The Parties will follow all industry Ordering and Billing Forum ("OBF") adopted guidelines pertaining to TNS codes.

4.4.1 BellSouth's Common Channel Signaling Access Service ("CCSAS") allows interconnected carriers to exchange signaling information over a communications path that is separate from the message path.

4.4.2 The transport portion of CCSAS, commonly referred to as a signaling link, is provided via dedicated 56 kbps out of band signaling connections between the AT&T signaling point of interconnection and BellSouth's signaling point of interconnection ("SPOI").

4.4.3 The network termination point where this interconnection takes place is called the Signaling Transfer Point ("STP") port termination.

4.4.4 Charges for signaling links and the STP port termination can be found in Attachment 2 of this Agreement, incorporated herein by this reference.

4.4.5 Each CCSAS signaling connection provides for two-way digital transmission at speeds in multiples of 56 kbps. The connection to BellSouth's STP pair can be made from either AT&T's signaling point ("SP"), which requires a minimum of two links, or from AT&T's STP pair, which requires a minimum of four links.

4.4.6 SS7 Interconnection will take place at STP locations that are mutually agreed to by the Parties.

4.4.7 Where CCS is not available, in-band multi-frequency signaling will be provided. In such an arrangement, each Party will outpulse the full ten-digit telephone number of the called party to the other Party with appropriate call set-up and Automatic Number Identification ("ANI") where available, at parity.

4.4.8 The Parties will provide CCS to one another, where and as available, in conjunction with access to call related databases and Service Control Points ("SCP"), including toll free databases, Line Information Database ("LIDB"), Calling Name ("CNAM"), and any other necessary databases.

4.4.9 When the Parties establish new links , each Party shall provide its own STP port termination(s) and charge the other Party for the signaling links as follows:

4.4.9.1 Where the SPOI for the signaling link is at a Fiber Meet, there shall be no compensation between the Parties for the signaling link facilities used.

4.4.9.2 Where the SPOI for the signaling link facilities is located at the BellSouth Serving Wire Center where the signaling link facilities terminates and AT&T has furnished the interconnection facility, BellSouth will pay a monthly charge equal to one half of the AT&T-provided facility charge according to BellSouth's unbundled rate element for the facility used. Rates for said interconnection facilities shall be as set forth in Exhibit A in Attachment 2, incorporated herein by this reference.

4.4.9.3 Where the SPOI for the signaling link facilities is located at the AT&T Serving Wire Center facility where the signaling link facilities terminate and BellSouth has furnished the interconnection facility, AT&T will pay a monthly charge equal to one half of the BellSouth-provided facility charge according to BellSouth's unbundled rate element for the facility used. Rates for said interconnection facilities shall be as set forth in Exhibit A in Attachment 2, incorporated herein by this reference.

4.4.9.4 Each party is responsible for all facility maintenance and provisioning on its side of the SPOI.

4.4.10 Implementation of new interconnection arrangements (as opposed to augmentation of existing arrangements), including testing of SS7 interconnection, shall be pursuant to the technical specifications set forth in the applicable industry standard technical references. Each Party will be expected to provide sufficient cooperative testing resources to ensure proper provisioning, including the ability to confirm that AT&T LERG-assigned NPA NXX codes have been opened,

translated and routed accurately in all appropriate BellSouth switches. A mutually agreed test calling plan shall be conducted to ensure successful completion of originating and terminating calls.

4.5 Message Screening

4.5.1 BellSouth shall set message screening parameters so as to accept messages from AT&T local or tandem switching systems destined to any signaling point in the BellSouth SS7 network or any network interconnected to the BellSouth SS7 network with which the AT&T switching system has a legitimate signaling relationship.

4.5.2 BellSouth shall set message screening parameters so as to accept messages destined to/from an AT&T local or tandem switching system or to/from an AT&T Service Control Point ("SCP") from any signaling point or network interconnected to the BellSouth SS7 network with which the AT&T switching system has a legitimate signaling relationship.

4.6 STP Requirements

4.6.1 BellSouth shall provide message transfer part and Signaling Connection Control Point ("SCCP") protocol interfaces in accordance with the technical specifications set forth in the applicable industry standard technical references.

4.7 SS7 Network Interconnection

4.7.1 SS7 Network Interconnection is the interconnection of AT&T STPs and AT&T local or tandem switching systems with the BellSouth STPs. This interconnection provides connectivity that enables the exchange of SS7 messages among BellSouth switching systems and databases, AT&T local or tandem switching systems and other third-party switching systems directly connected to the BellSouth SS7 network.

4.7.2 SS7 Network Interconnection shall provide connectivity to all components of the BellSouth SS7 network. These include:

4.7.2.1 BellSouth local or tandem switching systems;

4.7.2.2 BellSouth databases; and

4.7.2.3 Other third party local or tandem switching systems.

4.7.3 The connectivity provided by SS7 Network Interconnection shall fully support the functions of BellSouth switching systems and databases and AT&T or other third-party switching systems with (note could be an A link or a D/B link direct access to the BellSouth SS7 network.

4.7.4 SS7 Network Interconnection shall provide transport for certain types of TCAP messages. If traffic is routed based on dialed or translated digits between an AT&T local switching system and a BellSouth or other third-party local switching system, either directly or via a BellSouth tandem switching system, then it is a requirement that the BellSouth SS7 network convey via SS7 Network Interconnection the TCAP messages that are necessary to provide Call Management services (Automatic Callback, Automatic Recall, and Screening List Editing) between the AT&T local STPs and the BellSouth or other third-party local switch.

4.7.5 When the capability to route messages based on Intermediate Signaling Network Identifier ("ISNI") is generally available on BellSouth STPs, the BellSouth SS7 Network shall also convey TCAP messages using SS7 Network Interconnection in similar circumstances where the BellSouth switch routes traffic based on a Carrier Identification Code ("CIC").

4.7.6 BellSouth shall offer the following SS7 Network Interconnection options to connect AT&T or AT&T-designated local or tandem switching systems or STPs to the BellSouth SS7 network:

4.7.6.1 A-link interface from AT&T local or tandem switching systems; and

4.7.6.2 D/B-link interface from AT&T STPs.

4.7.7 Each interface shall be provided by one or more sets (layers) of signaling links, as follows:

4.7.7.1 An A-link layer shall consist of two links.

4.7.7.2 A D/B-link layer shall consist of four links.

4.7.8 The Parties agree to implement intraoffice diversity for the signaling links so that no single failure of intraoffice facilities or equipment shall cause the failure of any two links in a layer connecting to a BellSouth STP.

4.7.9 Signaling Call Information. BellSouth and AT&T will send and receive 10 digits for local traffic. Additionally, BellSouth and AT&T will exchange the proper call information, i.e., originated call company number and destination call company number, CIC, and OZZ, including all proper translations for routing between networks and any information necessary for billing.

4.8 Trunk Forecasting and Servicing Requirements.

4.8.1 The Parties shall exchange technical descriptions and forecasts of their interconnection and traffic requirements in sufficient detail necessary to establish the interconnections required to assure traffic completion to and from all customers in their respective designated service areas. In order for BellSouth to provide as accurate reciprocal trunking forecasts as possible to AT&T, AT&T must timely inform BellSouth of any known or anticipated events that may affect BellSouth reciprocal trunking requirements. If AT&T refuses to provide such information, BellSouth shall provide reciprocal trunking forecasts based only on existing trunk group growth and BellSouth's annual estimated percentage of BellSouth subscriber line growth.

4.8.2 Both Parties shall meet every six months or at otherwise mutually agreeable intervals for the purpose of exchanging non-binding forecast of its traffic and volume requirements for the interconnection and Network Elements provided under this Agreement, in the form and in such detail as agreed by the Parties. The Parties agree that each forecast provided under this section shall be deemed "Confidential Information" as set forth in Section 18 of the General Terms and Conditions of this Agreement, incorporated herein by this reference.

4.8.3 The trunk forecast should include trunk requirements for all of the interconnecting trunk groups for the current year plus the next two future years. The forecast meeting between the two companies may be a face-to-face meeting, video conference or audio conference. It may be held regionally or geographically. Ideally, these forecast meetings should be held at least semi-annually, or more often if the forecast is no longer usable. Updates to a forecast or portions thereof should be made whenever the Party providing the forecast deems that the latest trunk requirements exceed the original quantities by 48 trunks or 10%, whichever is greater. Either Party should notify the other Party if they have measurements indicating that a trunk group is exceeding its designed call carrying capacity and is impacting other trunk groups in the network. Also, either Party should notify the other Party if they know of situations in which the traffic load is expected to increase significantly and thus affect the interconnecting trunk requirements as well as the trunk requirements within the other Party's network. The Parties agree that the forecast information provided under this section shall be deemed "Confidential Information" as set forth in Section 18 of the General Terms and Conditions of this Agreement, incorporated herein by this reference. Each Party shall provide a specified point of contact for planning, forecasting and trunk servicing purposes.

4.8.4 For a non-binding trunk forecast, agreement between the two Parties on the trunk quantities and the timeframe of those trunks does not

imply any liability for failure to perform if the trunks are not available for use at the required time.

4.8.5 Both Parties will manage the capacity of their interconnection trunk groups. BellSouth will issue an ASR to AT&T to order changes BellSouth desires to the BellSouth interconnection trunk groups based on BellSouth's capacity assessment. AT&T will issue an ASR to BellSouth to order changes AT&T desires to the AT&T interconnection trunk groups based on AT&T's capacity assessment.

4.8.6 Either Party may issue a Trunk Group Service Request ("TGSR") to the other Party to order changes it desires to the interconnection trunk groups based on its capacity assessment. The Party receiving the TGSR will, within ten (10) business days, respond with an ASR or an explanation of why it believes an ASR is inappropriate.

4.8.7 The Party submitting an ASR will provide complete and accurate tie down inventory assignments in typical industry bay, panel and jack format, or in such other format as the Parties agree, on each order by use of a Design Layout Record. Additional tie down information, such as span information, may be required when applicable.

4.8.8 The Parties will prepare ASRs pursuant to the industry standard guidelines of the OBF.

4.8.9 The Party provisioning the ASR will assign to the requesting Party a location code expressed in CLLI code format that will appear in the Access Customer Terminal Location Field of the ASR.

4.8.10 The standard interval used for the provisioning of additions to local interconnection trunk groups shall be no greater than ten (10) business days, for orders of fewer than ninety-six (96) DS-0 trunks. Other orders shall be determined on an individual case basis. Where feasible, either Party will expedite installation, upon the other Party's request.

4.8.11 Major projects shall be limited to those projects that require the coordination and execution of multiple orders or related activities between and among BellSouth and AT&T work groups specifically relating to: (i) the initial establishment of local interconnection trunk groups; (ii) extending service into a new area; (iii) NXX code moves; (iv) facility grooming; or (v) network rearrangements. If orders that are component pieces of a major project are submitted after project implementation has been jointly planned and coordinated, they shall be submitted with a major project reference. Several orders submitted at one time may not be classified as a major project without the consent of the submitting Party. Each Party will identify a single point

of contact that will be responsible for overall coordination and management of a major project through an agreed completion point.

4.8.12 As provided herein, AT&T and BellSouth agree to exchange escalation lists which reflect contact personnel including vice president level officers. These lists shall include name, department, title, phone number, and fax number for each person. AT&T and BellSouth agree to exchange an up-to-date list promptly following changes in personnel or information.

4.9 Interference or Impairment

4.10 **Within three (3) business days of receipt of notification of blocking of traffic originated within the other Party's network, the Parties shall determine and begin work to implement reasonable corrective measures in a manner consistent with industry practices. [OPEN-BST]**

4.11 Local Dialing Parity

4.11.1 BellSouth and AT&T shall provide local and toll dialing parity to each other with no unreasonable dialing delays. Dialing parity shall be provided for all originating telecommunications services that require dialing to route a call. BellSouth and AT&T shall permit similarly situated telephone exchange service end users to dial the same number of digits to make a local telephone call notwithstanding the identity of the end user's or the called party's telecommunications service provider.

5 NETWORK MAINTENANCE

5.1 Outage Repair Standard

5.1.1 In the event of an outage or trouble in any arrangement, facility, or service being provided by BellSouth hereunder, BellSouth will follow procedures for isolating and clearing the outage or trouble that are no less favorable than those that apply to comparable arrangements, facilities, or services being provided by BellSouth to itself, Affiliate or any other carrier whose network is connected to that of BellSouth.

5.2 BellSouth shall provide AT&T at least sixty (60) days' advance notice of any scheduled maintenance activity which may impact AT&T's end users. Scheduled maintenance shall include, without limitation, such activities as, switch software retrofits, power tests, major equipment replacements and cable rolls. Plans for scheduled maintenance shall include, at a minimum, the following information: location and type of facilities, specific work to be performed, date and time work is

scheduled to commence, work schedule to be followed, date and time work is scheduled to be completed, estimated number of work-hours for completion.

6 INTERCONNECTION COMPENSATION

6.1 Compensation for Local and IntraLATA Toll Traffic

6.1.1 Except as provided in this Attachment, the Parties shall bill each other reciprocal compensation in accordance with the standards set forth in this Agreement for all local and intraLATA toll traffic originated by one Party and terminated to the other Party. Such traffic shall be recorded and transmitted to AT&T in accordance with Attachment 6 of this Agreement. Reciprocal compensation for the transport and termination of local and intraLATA toll traffic shall be charged at rates specified in Exhibit A of this Attachment.

6.1.2 **DISAGREE**

AT&T PROPOSAL

Where AT&T provides service to an AT&T end user using any Combinations that includes the local switching Network Element, the Parties shall adopt a "bill and keep" compensation arrangement for local and intraLATA toll traffic. Under this compensation arrangement, the terminating carrier will not charge the originating carrier for such traffic at either the appropriate end office or access tandem switch. Notwithstanding the implementation of a "bill and keep" compensation arrangement for such traffic, BellSouth will record and forward to AT&T all associated usage, as provided in Attachment 6 to this Agreement.

BST PROPOSAL

~~**Where AT&T provides service to an AT&T end user using any Combinations that includes the local switching Network Element, the Parties shall adopt a "bill and keep" compensation arrangement for local and intraLATA toll traffic. Under this compensation arrangement, the terminating carrier will not charge the originating carrier for such traffic at either the appropriate end office or access tandem switch. Notwithstanding the implementation of a "bill and keep" compensation arrangement for such traffic, BellSouth will record and forward to AT&T all associated usage, as provided in Attachment 6 to this Agreement.**~~

~~1.1.3~~6.1.3 **DISAGREE**

AT&T PROPOSAL

As clarification of this definition and for reciprocal compensation, Local Traffic does include traffic that originates from or terminates to or through an enhanced service provider or information service provider. ~~**As further clarification, Local Traffic does not include traffic that consists of minutes of use from any end user customer that relies upon a call placed by that end user customer or on the end user customer's behalf to establish or maintain a network connection, if: (a) minutes of use to be billed are primarily associated with traffic of a type not routinely and ordinarily recognized by a reasonable person to constitute traffic as a result of a telephone call (i.e., voice or data traffic); (b) the end user customer does not control the destination of the call; and (c) the minutes of use do not serve a legitimate purpose that is unrelated to the receipt of reciprocal compensation or any other benefit that may be derived solely from establishing or maintaining the network connection.**~~

BST PROPOSAL

As clarification of this definition and for reciprocal compensation, Local Traffic does **not** include traffic that originates from or is directed to or through an enhanced service provider or information service provider. **As further clarification, Local Traffic does not include traffic that consists of minutes of use from any end user customer that relies upon a call placed by that end user customer or on the end user customer's behalf to establish or maintain a network connection, if: (a) minutes of use to be billed are primarily associated with traffic of a type not routinely and ordinarily recognized by a reasonable person to constitute traffic as a result of a telephone call (i.e., voice or data traffic); (b) the end user customer does not control the destination of the call; and (c) the minutes of use do not serve a legitimate purpose that is unrelated to the receipt of reciprocal compensation or any other benefit that may be derived solely from establishing or maintaining the network connection.**

~~1.1.4~~6.1.4 **DISAGREE**

AT&T PROPOSAL

Each Party is financially responsible for providing, on its side of the POI, the facilities on which the Trunks carrying such Party's local and intraLATA toll traffic are provisioned. ~~**The Parties shall provide for the mutual and reciprocal recovery of the costs for the**~~

~~**network facilities utilized in transporting and terminating local traffic on each other's network. The Parties agree that charges for transport and termination of calls on their respective networks are as set forth in Exhibit A to this Attachment.**~~

BST PROPOSAL

The Parties shall provide for the mutual and reciprocal recovery of the costs for the network facilities utilized in transporting and terminating local traffic on each other's network. The Parties agree that charges for transport and termination of calls on their respective networks are as set forth in Exhibit A to this Attachment.

~~1.1.5~~6.1.5 For the purposes of this Attachment 3, Common (Shared) Transport is defined as the transport of one Party's traffic by the other Party over the other Party's common (shared) facilities between the other Party's tandem switch and end office switch and/or between the other Party's tandem switches.

6.1.6 For the purposes of this Attachment 3, Tandem Switching is defined as the function that establishes a communications path between two switching offices through a third switching office (the Tandem switch).

6.1.7 For the purposes of this Attachment 3, End Office Switching is defined as the function that establishes a communications path between the trunk side and line side of the End Office switch.

6.1.8 **DISAGREE**

AT&T PROPOSAL

5.3.16 4/18

~~**If AT&T utilizes a switch outside the LATA and BellSouth chooses to purchase dedicated or common (shared) transport from AT&T for transport and termination of BellSouth originated traffic, BellSouth will pay AT&T no more than the airline miles between the V & H coordinates of the Point of Interface within the LATA where AT&T receives the BellSouth-originated traffic and the V & H coordinates of the BellSouth Exchange Rate Center Area that the AT&T terminating NPA/NXX is associated in the same LATA. For these situations, BellSouth will compensate AT&T at either dedicated or common (shared) transport rates specified in Exhibit A and based upon the network facilities provided by AT&T as defined in this Attachment 3.**~~

BST PROPOSAL

If AT&T utilizes a switch outside the LATA and BellSouth chooses to purchase dedicated or common (shared) transport from AT&T for transport and termination of BellSouth originated traffic, BellSouth will pay AT&T no more than the airline miles between the V & H coordinates of the Point of Interface within the LATA where AT&T receives the BellSouth-originated traffic and the V & H coordinates of the BellSouth Exchange Rate Center Area that the AT&T terminating NPA/NXX is associated in the same LATA. For these situations, BellSouth will compensate AT&T at either dedicated or common (shared) transport rates specified in Exhibit A and based upon the network facilities provided by AT&T as defined in this Attachment 3.

~~1.1.96~~.1.9 **DISAGREE**

AT&T PROPOSAL

~~**Neither Party shall represent access services traffic (e.g., Internet Protocol Telephony, FGA, FGB, etc.) as Local Traffic for purposes of payment of reciprocal compensation. "Internet Protocol Telephony" is defined as real-time voice conversations over the Internet by converting voices into data which is compressed and split into packets, which are sent over the Internet like any other packets and reassembled as audio output at the receiving end.**~~

BST PROPOSAL

Neither Party shall represent access services traffic (e.g., Internet Protocol Telephony, FGA, FGB, etc.) as Local Traffic for purposes of payment of reciprocal compensation. "Internet Protocol Telephony" is defined as real-time voice conversations over the Internet by converting voices into data which is compressed and split into packets, which are sent over the Internet like any other packets and reassembled as audio output at the receiving end.

~~1.1.106~~.1.10 **Unidentifiable traffic. AT&T shall utilize its NPA/NXXs in such a way and will provide the necessary information so that BellSouth shall be able to distinguish local from intraLATA toll traffic for BellSouth originated traffic. AT&T end users assigned NPA/NXX line numbers shall be physically located in the BellSouth rate center with which the NPA/NXX has been associated. Whenever BellSouth delivers traffic to AT&T for termination on the AT&T's network, if BellSouth cannot determine, because of the manner in which AT&T has utilized its NXX codes whether the traffic is local or toll, BellSouth will charge the applicable rates for originating intrastate network access service as reflected in BellSouth's**

Intrastate Access Services Tariff. BellSouth will make appropriate billing adjustments if AT&T can provide sufficient information for BellSouth to determine whether said traffic is local or toll. [OPEN-AT&T/BST]

6.1.11 **DISAGREE**

AT&T PROPOSAL

Percent Local Use. Each Party will report to the other a Percentage Local Usage ("PLU"). The application of the PLU will determine the amount of local minutes to be billed to the other Party. For purposes of developing the PLU, each Party shall consider every local call and every long distance call, excluding intermediary traffic. By the first of **each month**, BellSouth and AT&T shall provide a positive report updating the PLU. Detailed requirements associated with PLU reporting shall be as set forth in BellSouth's Standard Percent Local Use Reporting Platform for Interconnection Purchasers, as it is amended from time to time during this Agreement. Notwithstanding the foregoing, where the terminating company has message recording technology that identifies the traffic terminated, such information, in lieu of the PLU factor, shall at the company's option be utilized to determine the appropriate reciprocal compensation to be paid.

BST PROPOSAL

Percent Local Use. Each Party will report to the other a Percentage Local Usage ("PLU"). The application of the PLU will determine the amount of local minutes to be billed to the other Party. For purposes of developing the PLU, each Party shall consider every local call and every long distance call, excluding intermediary traffic. By the first of **January, April, July and October of each year,** BellSouth and AT&T shall provide a positive report updating the PLU. Detailed requirements associated with PLU reporting shall be as set forth in BellSouth's Standard Percent Local Use Reporting Platform for Interconnection Purchasers, as it is amended from time to time during this Agreement. Notwithstanding the foregoing, where the terminating company has message recording technology that identifies the traffic terminated, such information, in lieu of the PLU factor, shall at the company's option be utilized to determine the appropriate reciprocal compensation to be paid.

~~1.1.12~~6.1.12 Percentage Interstate Usage. For combined interstate and intrastate AT&T traffic terminated by BellSouth over the same facilities, AT&T will be required to provide a projected Percentage Interstate Usage ("PIU") to BellSouth. All jurisdictional report requirements, rules and regulations for Interexchange Carriers specified in BellSouth's

Intrastate Access Services Tariff will apply to AT&T. After interstate and intrastate traffic percentages have been determined by use of PIU procedures, the PLU factor will be used for application and billing of local interconnection. Notwithstanding the foregoing, where the terminating company has message recording technology that identifies the traffic terminated, such information, in lieu of the PLU factor, shall at the company's option be utilized to determine the appropriate reciprocal compensation to be paid.

6.1.13 Audits. On thirty (30) days written notice, each Party must provide the other the ability and opportunity to conduct an annual audit of the traffic reported. BellSouth and AT&T shall retain records of call detail for a minimum of nine months from which a PLU and/or PIU can be ascertained. The audit shall be accomplished during normal business hours at an office designated by the Party being audited. Audit requests shall not be submitted more frequently than one (1) time per calendar year. Audits shall be performed by a mutually acceptable independent auditor paid for by the Party requesting the audit. The PLU and/or PIU shall be adjusted based upon the audit results and shall apply to the usage for the quarter the audit was completed, to the usage for the quarter prior to the completion of the audit, and to the usage for the two quarters following the completion of the audit. If, as a result of an audit, either Party is found to have overstated the PLU and/or PIU by twenty percentage points (20%) or more, that Party shall reimburse the auditing Party for the cost of the audit.

6.1.14 Compensation for 800 Traffic. Each Party shall compensate the other pursuant to the appropriate switched access charges, including the database query charge as set forth in the each Party's intrastate or interstate switched access tariffs.

6.1.15 Records for 8YY Billing. Each Party will provide to the other the appropriate records necessary for billing intraLATA 8YY customers. Records required for billing end users purchasing 8YY Services shall be provided pursuant to Attachment 6 of this Agreement, incorporated herein by this reference.

6.1.16 **DISAGREE**

AT&T PROPOSAL

Transit Traffic Service. "Transit Traffic" means all intraLATA traffic that originates from or terminates to AT&T end users that is terminated or originated by a third-party telecommunications carrier (including another ILEC, CMRS or another CLEC) and uses transit services (which include tandem switching, or transport) provided by BellSouth. Transit traffic does not include traffic

originating from or terminating to AT&T end users utilizing resold BellSouth services. For Transit Traffic that is originated by AT&T (or for which AT&T would otherwise pay reciprocal compensation to BellSouth if they were terminated or originated by the BellSouth and not by the third-party telecommunications carrier), AT&T shall compensate BellSouth for providing transit services pursuant Exhibit A to this Attachment 3. AT&T shall be responsible for dealing directly with third-party telecommunications carriers regarding compensation for call origination and termination.

BST PROPOSAL

Transit Traffic Service. BellSouth shall provide tandem switching and transport services for AT&T's transit traffic. Transit traffic is traffic originating on AT&T's network that is switched and/or transported by BellSouth and delivered to a third party's network, or traffic originating on a third Party's network that is switched and/or transported by BellSouth and delivered to AT&T's network. Rates for local transit traffic shall be the applicable call transport and termination charges as set forth in Exhibit A to this Attachment. Rates for intraLATA toll and Switched Access transit traffic shall be the applicable call transport and termination charges as set forth in BellSouth Interstate or Intrastate Switched Access tariffs. Switched Access transit traffic presumes that AT&T's end office is subtending the BellSouth Access Tandem for switched access traffic to and from AT&T's end users utilizing BellSouth facilities, either by direct trunks with the IXC, or via the BellSouth Access Tandem. Billing associated with all transit traffic shall be pursuant to MECAB procedures. Wireless Type 1 traffic shall not be treated as transit traffic from a routing or billing perspective. Wireless Type 2A traffic shall not be treated as transit traffic from a routing or billing perspective until BellSouth and the Wireless carrier have the capability to properly meet-point-bill in accordance with Multiple Exchange Carrier Access Billing (MECAB) guidelines.

6.1.17 Rates for using interfaces to OSS – To the extent AT&T orders Services and Elements for the purpose of interconnection with BellSouth, the rates set forth in Exhibit A of Attachment 2, incorporated herein by this reference, shall apply.

Peacock, Billy C (Bill)

From: Stevens, Roberta, NCAM
Sent: Tuesday, May 15, 2001 9:07 AM
To: Douglas, Roxanne, LGA; Karno, Michael D, LGA; Benenati, Sam R, NCAM
Cc: Peacock, Billy C (Bill), NCAM
Subject: FW: ATT 3 Proposal

Importance: High

ATT proposal

FYI - Redline of ATT 3 from Beth.

Roberta

Peacock, Billy C (Bill)

From: Beth.Shiroishi@bridge.bellsouth.com
To: Michael.Willis1@bridge.bellsouth.com
Cc: Leah.Cooper@BellSouth.COM; E.Honeycutt@bridge.bellsouth.com
Subject: ATT proposal

ATT5_12.DOC

Michael,

Pls forward this on to AT&T for Wed.

AT&T - Attached is the version that I committed to providing you today. I have redlined in the changes we discussed on point of interconnection vs. interconnection trunk group. After I got a ways through the document, I realized that there were fairly significant differences between your 4/28 version and the last 4/18 version. I went ahead and finished out this proposal on this version, but I am letting you know now that we will want to go back to using the 4/18 version on Wed, and we will incorporate any agreed to changes (if there are any) to this proposal into the 4/18 version.

Bill (On another note) - do you have any numbers yet?

Thanks,

Beth

2.3.6 The Parties shall jointly coordinate and undertake maintenance of the SONET transmission system. Each Party shall be responsible for maintaining the components of their own SONET transmission system.

2.3.7 Each Party will be responsible for (i) providing its own transport facilities to the Fiber Meet, and (ii) the cost to build-out its facilities to such Fiber Meet.

2.3.8 Neither Party shall charge the other for its portion of the Fiber Meet facility between the ASWC and the BSWC used exclusively for the other Party's local traffic (i.e., the Local Channel). The Parties do not intend to utilize this arrangement for transit traffic.

3 INTERCONNECTION TRUNKING AND ROUTING

3.1 The parties will establish separate trunk groups as follows:

3.1.1 Exchange Service Interconnection Traffic ("ESIT") trunk groups will be established to carry combined local and intraLATA toll traffic. ESIT means traffic that is originated by an end user of one Party and terminates to an end user of the other Party within a given LATA. Unless the Parties mutually agree otherwise, ESIT trunk groups shall be one-way terminating trunks.

3.1.2 Two-way Meet Point Traffic trunk groups will be established to carry Switched Access traffic for third-party IXC customers.

3.1.3 Two-way Transit Traffic trunk groups will be established to carry traffic between AT&T and third party CLECs or ILECs other than BellSouth. The Parties agree that Meet Point Traffic and Transit Traffic may be combined on a single trunk group at AT&T's request.

3.1.4 At AT&T's request, one-way Meet Point Traffic trunks will be established by the Parties to enable AT&T to deliver undipped 8YY traffic from AT&T Customers to the LEC SSP for dipping in the Industry Toll Free Data Base. All originating toll free service calls for which AT&T requests that the BellSouth perform the SSP function (e.g., perform the database query) shall be delivered to BellSouth, using an agreed upon signaling format. This can be either GR-394-CORE format with Carrier Code "0110" and Circuit Code of "08" or GR-317-CORE format. Charges for dipping and transport to the IXC will be billed in accordance with MECOD/MECAB guidelines.

3.1.5 Special use trunks (e.g., 911, choke) will be established in accordance with this Section [ ].

scheduled to commence, work schedule to be followed, date and time work is scheduled to be completed, estimated number of work-hours for completion.

6 INTERCONNECTION COMPENSATION

6.1 Compensation for Local and IntraLATA Toll Traffic

6.1.1 Except as provided in this Attachment, the Parties shall bill each other reciprocal compensation in accordance with the standards set forth in this Agreement for all local and intraLATA toll traffic originated by one Party and terminated to the other Party. Such traffic shall be recorded and transmitted to AT&T in accordance with Attachment 6 of this Agreement. Reciprocal compensation for the transport and termination of local and intraLATA toll traffic shall be charged at rates specified in Exhibit A of this Attachment.

6.1.2 **DISAGREE**

AT&T PROPOSAL

Where AT&T provides service to an AT&T end user using any Combinations that includes the local switching Network Element, the Parties shall adopt a "bill and keep" compensation arrangement for local and intraLATA toll traffic. Under this compensation arrangement, the terminating carrier will not charge the originating carrier for such traffic at either the appropriate end office or access tandem switch. Notwithstanding the implementation of a "bill and keep" compensation arrangement for such traffic, BellSouth will record and forward to AT&T all associated usage, as provided in Attachment 6 to this Agreement.

BST PROPOSAL

~~**Where AT&T provides service to an AT&T end user using any Combinations that includes the local switching Network Element, the Parties shall adopt a "bill and keep" compensation arrangement for local and intraLATA toll traffic. Under this compensation arrangement, the terminating carrier will not charge the originating carrier for such traffic at either the appropriate end office or access tandem switch. Notwithstanding the implementation of a "bill and keep" compensation arrangement for such traffic, BellSouth will record and forward to AT&T all associated usage, as provided in Attachment 6 to this Agreement.**~~

Peacock, Billy C (Bill)

From: Michael.Willis1@bridge.bellsouth.com
Sent: Tuesday, May 22, 2001 5:44 PM
To: Peacock, Billy C (Bill), NCAM
Subject: AT&T redline

Importance: High

AT&T redline

Bill: Attached is the BellSouth redline as promised to today. Please provide AT&T's feedback on the attached and any follow-up questions by the end of this week. It would be helpful if you mark each subsection with agreed or disagree and or discussion needed. Please forward on to Talbot.

I have us down for a follow-up local interconnection meeting for June 5, 2001.

Thanks.

Peacock, Billy C (Bill)

From: Beth.Shiroishi@bridge.bellsouth.com
To: Leah.Cooper@BellSouth.COM; E.Honeycutt@bridge.bellsouth.com; Michael.Willis1@bridge.bellsouth.com
Subject: AT&T redline

ATT5_22.DOC DIAGRAMS.DOC

Michael - Pls forward to AT&T.

Attached is the Att 3 as a result of last weeks call and the new diagrams that I owed you. For items that are now agreed, I "unbolded" the language but still showed changes as redlined. If I modified a BST proposal, but AT&T has not yet accepted, the language is redlined, but still in bold. There are some items that are still open to BellSouth. Additionally, I did not redline in the "point of interconnection" vs. "interconnecting trunk group" language that was sent to you last Monday. If AT&T accepts the language, I will add it in then. Thanks,

Beth

2.9.4 The parties shall mutually agree upon a Point of Interface outside of the BSWC as a Fiber Meet point and shall make all necessary preparations to receive and to allow and enable delivery of fiber optic facilities into the Point of Interface with sufficient spare length to reach the Point of Interface. A Common Language Location Identification ("CLLI") code will be established for each Point of Interface. The code established must be a building type code. All orders shall originate from the Point of Interface (i.e., Point of Interface to AT&T, Point of Interface to BellSouth).

2.9.5 The Parties shall deliver and maintain their own strands wholly at their own expense. Upon verbal request by either Party, the other Party shall allow access to the Fiber Meet entry point for maintenance purposes as promptly as possible.

2.9.6 The Parties shall jointly coordinate and undertake maintenance of the SONET transmission system. Each Party shall be responsible for maintaining the components of their own SONET transmission system.

2.9.7 Each Party will be responsible for (i) providing its own transport facilities to the Fiber Meet, and (ii) the cost to build-out its facilities to such Fiber Meet.

2.9.8 Neither Party shall charge the other for its portion of the Fiber Meet facility between the ASWC and the BSWC used exclusively for the other Party's local traffic (i.e., the Local Channel). The Parties do not intend to utilize this arrangement for transit traffic.

3. INTERCONNECTION TRUNKING AND ROUTING

3.1 The Parties will convert all existing interconnection arrangements and trunks to the interconnection arrangements described in this Attachment in accordance with the following:

3.2 [Within 45 days of ~~the Effective Date~~either Party's written request, the Parties will mutually develop an operations plan based on sound engineering and operations principles, which will specify the guidelines to convert from the existing interconnection arrangements to the interconnection arrangements described in this Attachment 3. Such guidelines will conform to standard industry practices adopted by and contained in documents published by Industry Forums, including but not limited to, the Alliance for Telecommunications Industry Solutions ("ATIS") and the Ordering and Billing Forum ("OBF").

3.3 Each Party shall bear its own costs to convert from the existing interconnection arrangements to the interconnection arrangements described in this Attachment.

3.4 Unless otherwise mutually agreed, the Parties will complete the conversion within one [1] year of the ~~Effective Date~~Requesting Party's written request ~~of the Agreement~~.

3.5 If, following one [1] year after the ~~Effective Date of the Agreement~~Requesting Parth's written request, there exists any interconnection trunks which have not been converted to the interconnection arrangements described in this Attachment 3, then either Party may invoke the dispute resolution proceeding, pursuant to Section 16 of the General Terms and Conditions of this Agreement, incorporated herein by this reference. ~~[OPEN-BST/AT&T]~~

3.6 The Parties will use the following interconnection standards:

3.6.1 The Parties agree to establish Binary 8 Zero Sum Extended Superframe line protocol, where technically feasible.

3.6.2 In those cases where either Party's equipment will not support 64K Clear Channel Capability ("CCC"), the Parties agree to establish AMI line coding. Any AMI line coding will be Superframe formatted. DS3 facilities will be provisioned with C-bit parity.

3.6.3 Where additional equipment is required, such equipment shall be obtained, engineered, and installed to support 64K CCC trunks.

3.6.4 All interconnection facilities between the Parties will be sized according to mutual forecasts developed per the requirements of Section 4.14 of this Attachment 3 and sound engineering practices.

3.6.5 Interconnection will be provided utilizing either a DS1 or DS3 interface or, with the mutual agreement of the Parties, another technically feasible interface (e.g., STS-1).

3.6.6 BellSouth and AT&T shall establish interconnecting trunk groups and trunking configurations between networks including the establishment of one-way or two-way trunks in accordance with **[Exhibit [illegible] of this Attachment 3, attached hereto and incorporated herein by this reference.] [OPEN-BST to provide list]**

3.6.7 [All terms and conditions, as well as charges, both non-recurring and recurring, associated with interconnecting trunk groups between BellSouth and AT&T not addressed in Exhibit A shall be as set forth in the appropriate Party's intrastate or interstate tariff for switched access services. For two-way trunking that carries the Parties' local and intraLATA toll traffic, excluding transit traffic, the Parties shall be compensated for the nonrecurring and recurring charges for trunks and DS1 facilities at 50% of the applicable contractual or tariff rates for the services provided by each Party. AT&T shall be responsible for

5.3.1 Compensation for Local Traffic

5.3.1.1 **For reciprocal compensation between the Parties pursuan to this Attachment, Local Traffic is defined as ~~means~~ any telephone call that originates and terminates in the same LATA except for those calls that are originated or terminated through switched access arrangements as established by the ruling regulatory body~~and is billed by the originating Party as a local call~~ [when the originating Party has its own switch]. [OPEN-AT&T]** Therefore, when an AT&T end user originates traffic and AT&T sends it to BellSouth for termination, AT&T will determine whether the traffic is local or intraLATA toll. When a BellSouth end user originates traffic and BellSouth sends it to AT&T for termination, BellSouth will determine whether the traffic is local or intraLATA toll. Each Party will provide the other with information that will allow it to distinguish local from intraLATA toll traffic. At a minimum, each Party shall utilize NXX's in such a way that the other Party shall be able to distinguish local from intraLATA toll traffic.

DISAGREE

AT&T PROPOSAL: As clarification of this definition and for reciprocal compensation, Local Traffic does include traffic that originates from or terminates to or through an enhanced service provider or information service provider.

BST PROPOSAL: As clarification of this definition and for reciprocal compensation, Local Traffic does not include traffic that originates from or is directed to or through an enhanced service provider or information service provider.

The Parties recognize and agree that the compensation for the transport and termination of Local Traffic are intended to allow each Party to recover costs associated with such traffic. The Parties recognize and agree that such compensation will not be billed and shall not be paid for calls where a Party sets up a call, or colludes with a third party to set up a call, to the other Party's network for the purpose of receiving reciprocal compensation, and not for the purposes of providing a telecommunications service to an end user.~~As further clarification, Local Traffic does **not include traffic that consists of minutes of use from any end user customer that relies upon a call placed by that end user customer or on the end user customer's behalf to establish or maintain a network connection, if: (a) minutes of use to be billed are primarily associated with traffic of a type not routinely and ordinarily recognized by a reasonable person to constitute traffic as a result of a telephone**~~

Exhibit B

Basic Architecture

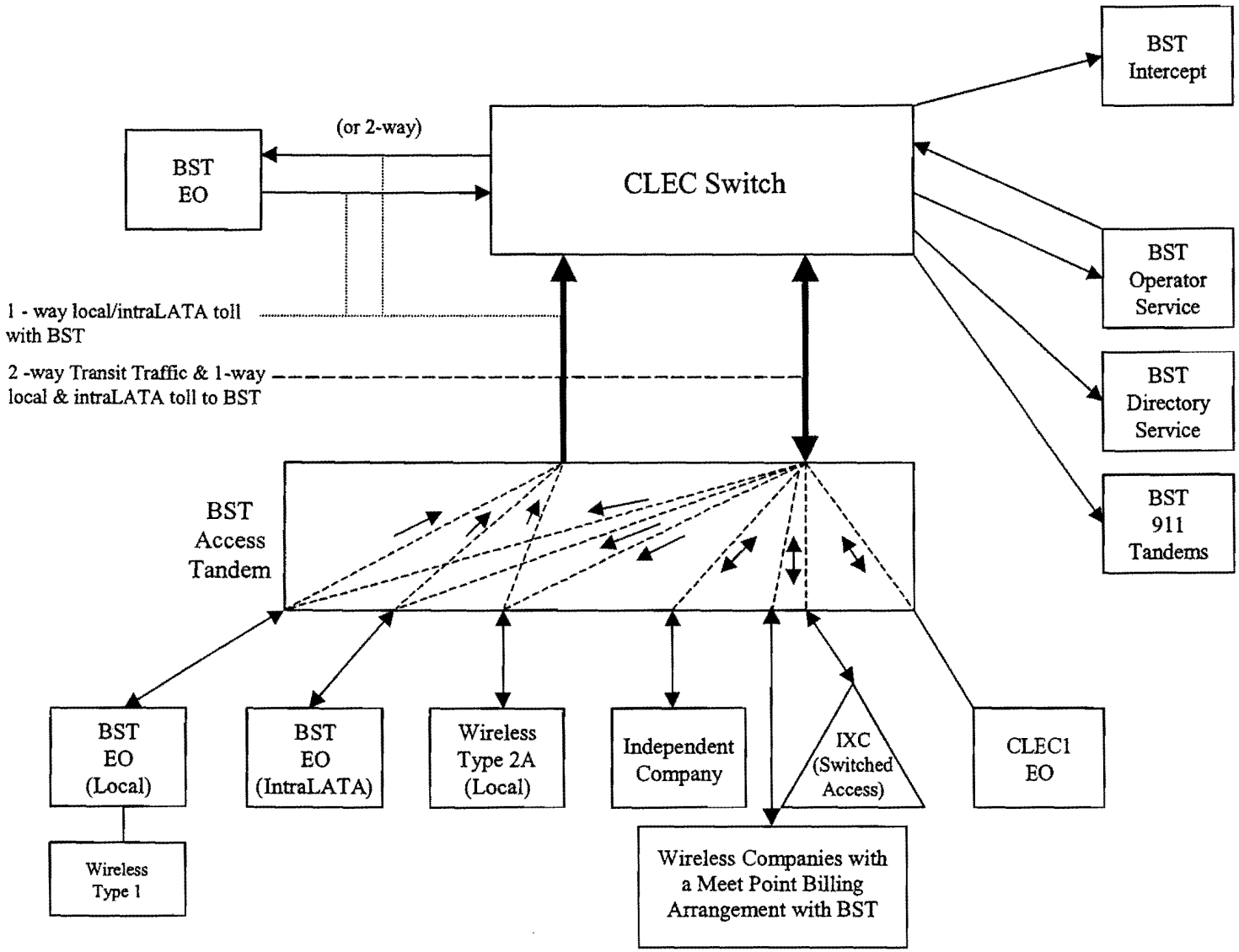

Exhibit C

One-Way Architecture

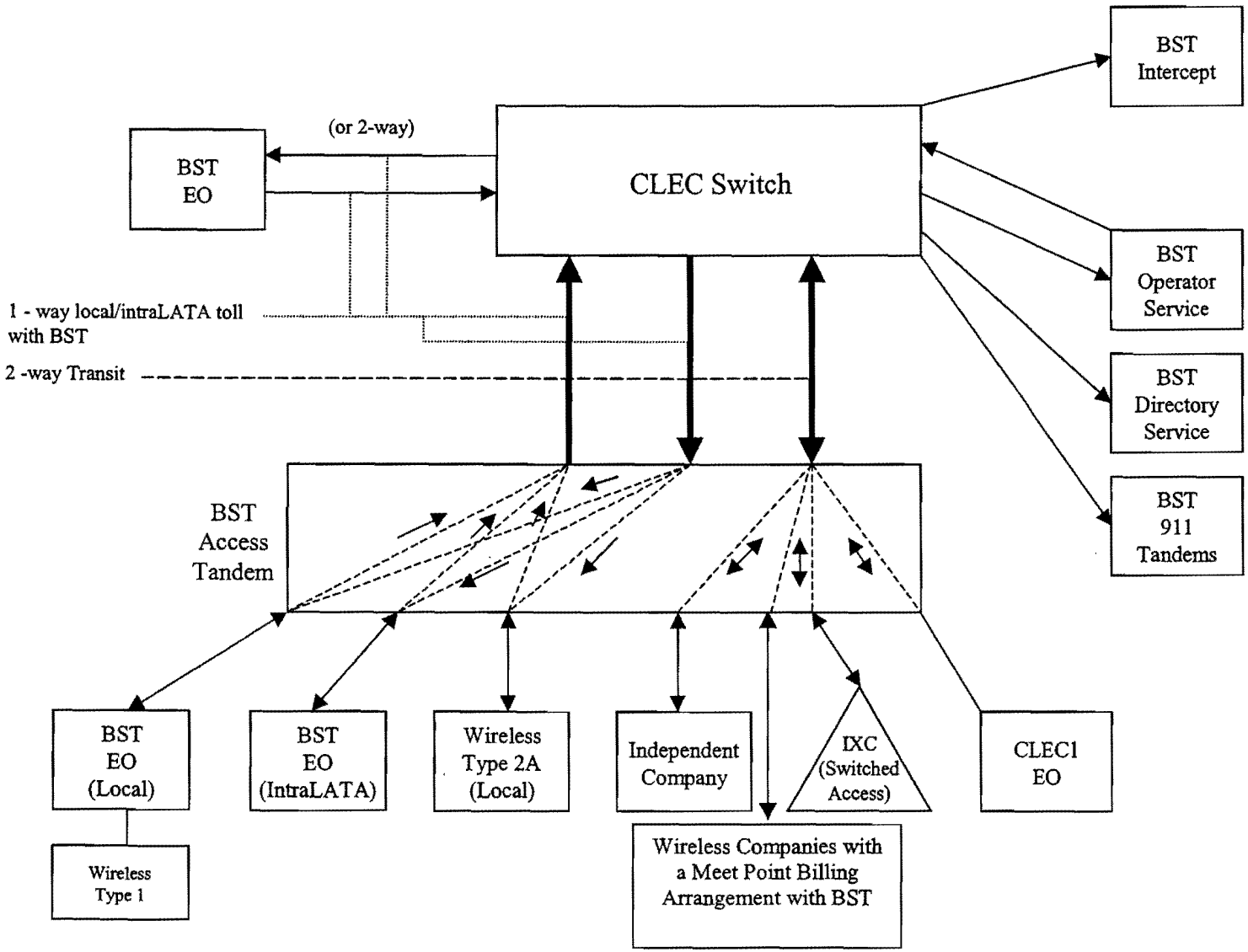

Exhibit D

Two-Way Architecture

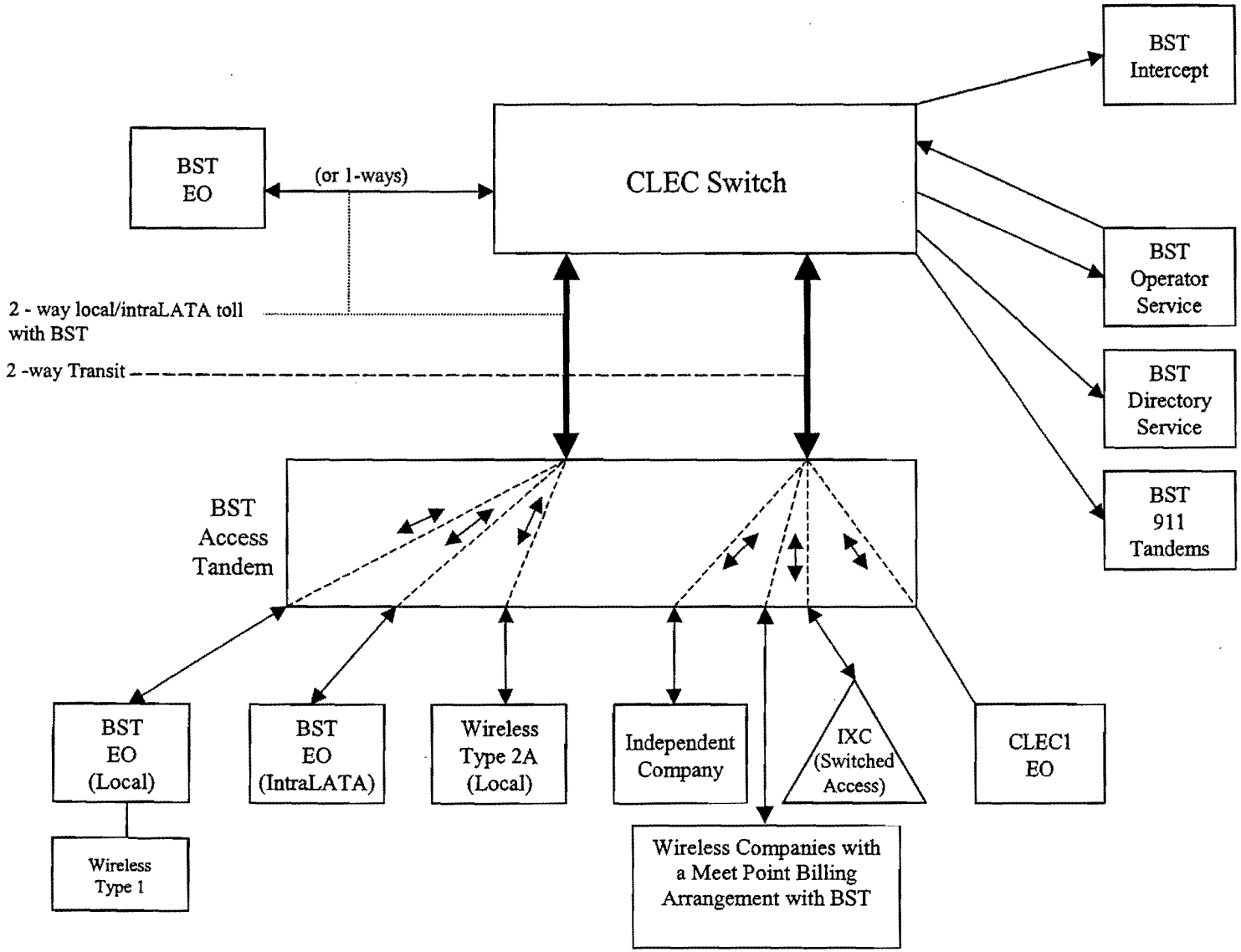

Exhibit E

Supergroup Architecture

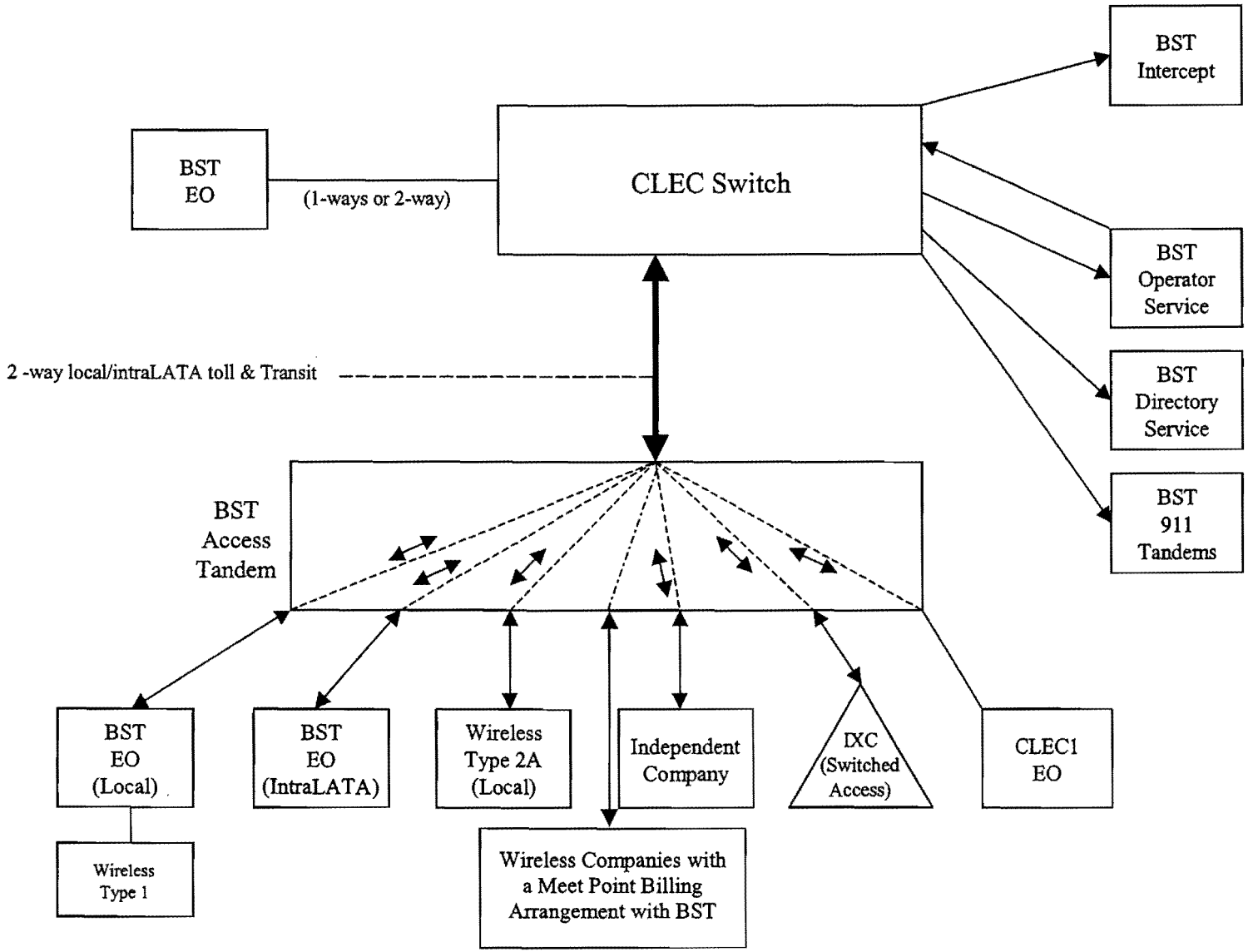

Peacock, Billy C (Bill)

From: Michael.Willis1@bridge.bellsouth.com
Sent: Tuesday, June 12, 2001 4:10 PM
To: Peacock, Billy C (Bill), NCAM; Stevens, Roberta, NCAM
Subject: AT&T attachment 3: 6_12 version

Importance: High

AT&T attachment 3:
6_12 versio...

Attached is the latest version of attachment 3. Please provide feedback on language open to AT&T. Additionally, the ball is still in AT&T's court on our last offer of meeting AT&T half way on the mileage at 25. Also, please let me know AT&T's feedback on the Attached by the 20th so that we can meet internally prior to our meeting on the 26th.

Thanks.

Peacock, Billy C (Bill)

From: Beth.Shiroishi@bridge.bellsouth.com
To: Leah.Cooper@BellSouth.COM; E.Honeycutt@bridge.bellsouth.com; Michael.Willis1@bridge.bellsouth.com
Subject: AT&T attachment 3: 6_12 version

OTHER6~1.DOC ATT6_12.DOC RLATT6~1.DOC

Michael - please forward the following to AT&T.

Attached are three documents.

1) The first ("other6_12.doc") is a document which explains a few things about the att 3 versions and outlines any open issues that are not encompassed in the redline.
2) The second document (ATT6_12.doc") is attachment 3.
3) The third document (rlATT6_12.doc") is the same attachment 3, but in redline format (it's not pretty, which is why I did one version redlined and one not).

I remembered to change the footer date this time, but I'm sure I forgot something else! So, let me know if you find anything that needs correcting.
Thanks,

Beth

NOTES ON REDLINE:

- Yellow highlights reflect Section references that will need to be checked and cleaned up once final numbering is complete.
- All references to Point of Interconnection have been changed to reflect terminology of "interconnection trunk group(s)"
- All changes in 2.1 and 2.2 are based on AT&T's proposal on 6/6/01. Where BST is agreeable, language is not bolded. Where BST has proposed a change, the language is bolded and open to AT&T. In the event the parties cannot agree on bolded language, BST retains the right to return to original language
- I have not updated the references on the first page to open and disagree items.

OTHER ISSUES:

- 1.1.1 – AT&T proposed a change on 6/6/01. BST requested information regarding the origin of such language.
- 1.1.2 – ATT proposed a change on 6/6/01. BST has not concurred.
- 1.9 and 1.11 – definitions open to ATT
- 2.3.1 – AT&T asked for clarification on the last sentence. BellSouth is ok with deleting the last sentence. AT&T's requested change is open to BST.
- 5.3.1.1 – ATT proposed definition on 6/6/01. Open to BST
- 5.3.1.7 – BST and ATT discussed possibility of bill and keep for IP Telephony traffic on 6/6/01. ATT accepted bill and keep – open to BST.
- 5.3.2 – open to BST
- Transit – BST reported on 6/6/01 status of meet point billing today. Issue open to ATT.
- OSS rates – BST proposes to delete the last section referencing OSS rates.

ATTACHMENT 3

LOCAL INTERCONNECTION

DISAGREE:

5.3.1.1
5.3.1.7

OPEN-AT&T	OPEN-BST
1.2	1.2
1.5	1.4.3
1.7	1.4.4
1.8	1.5
1.9 – 1.11	1.7
2.2.2	1.8
2.7	1.9 – 1.11
3.2 – 3.5	2.2.2
3.6.7	3.2 – 3.5
3.18.1.1	3.6.6
4.13.5.3	3.6.7
5.2	3.7
5.3.1.1	3.8
5.3.3	3.9
5.3.3.1	4.14.1
6	5.3.2

TABLE OF CONTENTS

1. NETWORK INTERCONNECTION 33
2. METHODS OF INTERCONNECTION 55
3. INTERCONNECTION TRUNKING AND ROUTING 108
4. NETWORK DESIGN AND MANAGEMENT FOR INTERCONNECTIONERROR! BOOKMAR
5. NETWORK MAINTENANCE 2119

EXHIBIT A

EXHIBIT B

EXHIBIT C

EXHIBIT D

EXHIBIT E

EXHIBIT F

LOCAL INTERCONNECTION

1. NETWORK INTERCONNECTION

1.1 The Parties shall provide interconnection with each other's network for the transmission and routing of telephone exchange service (local) and exchange access (intraLATA toll and switched access).

1.1.1 BellSouth shall provide interconnection with BellSouth's network at any technically feasible point within BellSouth's network.

1.1.2 AT&T shall provide interconnection to BellSouth at any mutually agreed upon point.

1.2 **[AT&T must establish, at a minimum, a single Point of Presence, Point of Interface, and Point of Interconnection with BellSouth within the LATA for the delivery of AT&T's originated local, intraLATA toll terminated to BellSouth and transit traffic terminated to other than BellSouth.][OPEN-BST/AT&T]** If AT&T chooses to interconnect ~~at a~~using a single ~~Point of Interconnection~~interconnection trunk group within a LATA, the interconnection trunk group must be at a BellSouth access or local tandem. Furthermore, AT&T must establish an ~~Points of Interconnection~~interconnection trunk group(s) at all BellSouth access and local tandems where AT&T NXXs are "homed." A "Homing" arrangement is defined by a "Final" Trunk Group between the BellSouth access or local tandem and AT&T End Office switch. A "Final" Trunk Group is the last choice telecommunications path between the access or local tandem and End Office switch. It is AT&T's responsibility to enter its own NPA/NXX access and/or local tandem "homing" arrangements into the national Local Exchange Routing Guide ("LERG"). In order for AT&T to home its NPA/NXX(s) on a BellSouth access or local tandem, AT&T's NPA/NXX(s) must be assigned to an exchange rate center area served by that BellSouth access or local tandem and as specified by BellSouth.

1.3 A Point of Presence is the physical location (a structure where the environmental, power, air conditioning, etc. specifications for a Party's terminating equipment can be met) at which a Party establishes itself for obtaining access to the other Party's network. The Point of Presence is the physical location within which the Point(s) of Interface occur.

1.4 A Point of Interface is the physical telecommunications interface between BellSouth and AT&T's interconnection facilities. It

establishes the technical interface and point of operational responsibility. The primary purpose of the Point of Interface is to serve as the terminus for each Party's interconnection facilities. The Point of Interface has the following main characteristics:

1.4.1 It is a cross-connect point to allow connection, disconnection, transfer or restoration of service.

1.4.2 It is a point where BellSouth and AT&T can verify and maintain specific performance objectives.

1.4.3 It is specified according to the interfaces offered in this Attachment 3.

1.5 ~~[The Point of Interconnection is the point at which the originating Party delivers its originated traffic to the terminating Party's first point of switching on the terminating Party's common (shared) network for call transport and termination. Points of Interconnection~~Interconnection trunk groups are available at either access tandems, local tandems, End Offices, or any other technically feasible point, as described in this Agreement. AT&T's requested ~~Point of Interconnection~~interconnection trunk ~~will~~groups will also be used for the receipt and delivery of transit traffic at BellSouth access and local tandems. Interconnection trunk groups~~Points of Interconnection~~ established at the BellSouth local tandem apply only to AT&T-originated local and local originating and terminating transit traffic.~~] [OPEN-BST/AT&T]~~

1.6 The Parties will work cooperatively to establish the most efficient trunking network in accordance with the provisions set forth in this Attachment 3 and accepted industry practices.

1.7 Each party will be responsible for engineering its network (i.e., the underlying facilities on which trunks are provisioned) and providing, or causing to be provided, any necessary equipment on its side of the Point of Interface.] AT&T, at its option, shall establish Points of Presence and Points of Interface for the delivery of its originated local and intraLATA toll traffic to BellSouth. ~~The Point of Interface may not necessarily be established at the Point of Interconnection.~~

1.8 **[BellSouth shall designate the Points of Presence and Points of Interface for the delivery of its originated local and intraLATA toll traffic to AT&T for call transport and termination by AT&T.] [OPEN-BST/AT&T]**

1.9 [For the purposes of this Attachment 3, Local Channel is defined as a switch transport facility between a Party's Point of Presence and its designated serving wire center.[open AT&T]

1.10 For the purposes of this Attachment 3, Serving Wire Center is defined as the wire center owned or leased by one Party from which the other Party would normally obtain dial tone for its Point of Presence.

1.11 **For the purposes of this Attachment 3, Dedicated Transport is defined as a switch transport facility between a Party's designated serving wire center and the first point of switching on the other Party's common (shared) network.] [OPEN-~~BST~~/AT&T]**

2. METHODS OF INTERCONNECTION [redacted]

2.1 ~~The Parties shall interconnect their networks utilizing one of the following methods in accordance with the provisions set forth in this Attachment 3.~~AT&T may specify one or more of the following methods to interconnection with the BellSouth network:

2.1.1 Collocation - BellSouth shall provide collocation to AT&T pursuant to the terms set forth in Attachment 4 of this Agreement, incorporated herein by this reference. AT&T may, at its option, purchase such collocation at the rates, terms, and conditions set forth in Attachment 4 of this Agreement, incorporated herein by this reference.

2.1.2 Leased Facilities - where AT&T utilizes the facilities offered by BellSouth. Such leased facilities shall be provided at the rates, terms, and conditions set forth in this Attachment 3. At AT&T's request, it may lease separate facilities for the sole purpose of delivering undipped 8YY traffic from AT&T's end users to BellSouth's Switching Services Port ("SSP") for dipping into BellSouth's toll free database.[BST proposes slight change – open to ATT]

2.1.3 Third Party Facilities - where AT&T utilizes the facilities provided by a source other than itself or BellSouth. AT&T shall comply with industry standards to maintain network integrity and will be solely responsible for any charges or fees assessed by the third party for use of its facilities.[BST proposes slight change – open to ATT]

2.1.4 Commercial Intra-building Interconnection – where both Parties have constructed broadband facilities into a commercial building (i.e., a

building that is not a telephone central office) and agree to establish a Point of Interface at such location utilizing intra-building cable.

2.1.5 "Fiber Meet" is an interconnection arrangement whereby the Parties physically interconnect their networks via an optical fiber interface (as opposed to an electrical interface), at which one Party's facilities, provisioning, and maintenance responsibility begins and the other Party's responsibility ends (i.e., Point of Interface). A Fiber Meet shall be an arrangement as set forth in Section 2.9 of this Attachment 3.

2.1.6 Any other method determined to be technically feasible and requested by AT&T shall be done pursuant to the process defined in Attachment 10 of this Agreement, incorporated herein by this reference.

2.2 ~~Interconnection by one Party at the premises of the other Party.~~BellSouth may specify one or more of the following to interconnection with the AT&T network:

2.2.1 Collocation - AT&T, at its sole discretion, may permit BellSouth to utilize space and power in AT&T facilities specified by AT&T solely for the purpose of terminating BellSouth's local traffic. BellSouth may request installation of both cable and equipment, or cable only. The pricing, terms and conditions of such arrangement shall be pursuant to Exhibit [illegible] of this Attachment 3, incorporated herein by this reference.

2.2.2 Leased Facilities - where the Party requesting interconnection utilizes the facilities offered by the other Party. Such leased facilities shall be provided at the rates, terms, and conditions set forth in this Attachment 3.[BST proposal to ATT – open to ATT]

~~2.2.1~~2.2.3 Third Party Facilities - where BellSouth utilizes the facilities provided by a source other than itself or AT&T. BellSouth shall comply with industry standards to maintain network integrity and will be solely responsible for any charges or fees assessed by the third party for use of its facilities.

2.2.4 Commercial Intra-building Interconnection – where both Parties have constructed broadband facilities into a commercial building (i.e., a building that is not a telephone central office) and agree to establish a Point of Interface at such location utilizing intra-building cable.~~BellSouth shall provide collocation to AT&T pursuant to the terms set forth in Attachment 4 of this Agreement, incorporated herein by this reference. AT&T may, at its option, purchase such collocation at the rates, terms, and conditions set forth in Attachment 4 of this Agreement, incorporated herein by this reference.~~

2.2.5 "Fiber Meet" is an interconnection arrangement whereby the

Parties physically interconnect their networks via an optical fiber interface (as opposed to an electrical interface), at which one Party's facilities, provisioning, and maintenance responsibility begins and the other Party's responsibility ends (i.e., Point of Interface). A Fiber Meet shall be an arrangement as set forth in [redacted] of this Attachment 3. [BST proposal to ATT – open to ATT]

2.2.6 Any other method determined to be technically feasible and requested by BellSouth and agreed to by AT&T shall be done. ~~[AT&T, at its sole discretion, may permit BellSouth to utilize space and power in AT&T facilities specified by AT&T solely for the purpose of terminating BellSouth's local traffic. BellSouth may request installation of both cable and equipment, or cable only. The pricing, terms and conditions of such arrangement shall be pursuant to Exhibit ___ of this Attachment 3, incorporated herein by this reference.] [OPEN-BST/AT&T]~~

~~2.3Leased Facilities – where the Party requesting interconnection utilizes the facilities offered by the other Party. Such leased facilities shall be provided at the rates, terms, and conditions set forth in this Attachment 3. At AT&T's request, it may lease separate facilities for the sole purpose of delivering undipped 8YY traffic from AT&T's end users to BellSouth's Switching Services Port ("SSP") for dipping into BellSouth's toll free database.~~

~~2.4Third Party Facilities – where the Party requesting interconnection utilizes the facilities provided by a source other than the Parties to this Agreement. The Party utilizing this option shall comply with industry standards to maintain network integrity and will be solely responsible for any charges or fees assessed by the third party for use of its facilities.~~

~~2.5Commercial Intra-building Interconnection – where both Parties have constructed broadband facilities into a commercial building (i.e., a building that is not a telephone central office) and agree to establish a Point of Interface at such location utilizing intra-building cable.~~

~~2.6"Fiber Meet" is an interconnection arrangement whereby the Parties physically interconnect their networks via an optical fiber interface (as opposed to an electrical interface), at which one Party's facilities, provisioning, and maintenance responsibility begins and the other Party's responsibility ends (i.e., Point of Interface). A Fiber Meet shall be an arrangement as set forth in Section 2.9 of this Attachment 3.~~

~~2.7Any other method determined to be technically feasible and requested by AT&T shall be done pursuant to the process defined in Attachment 10 of this Agreement, incorporated herein by this reference. Any other method determined to be technically feasible and requested by BellSouth and agreed to by AT&T shall be done pursuant to [redacted] [OPEN-AT&T]~~

~~2.8 Local Tandem Interconnection. This interconnection arrangement allows AT&T to establish a Point of Interconnection at BellSouth local tandems for: (1) the delivery of AT&T-originated local traffic transported and terminated by BellSouth to BellSouth end offices within the local calling area as defined in BellSouth's General Subscriber Services Tariff, Section A3 served by those BellSouth local tandems; and (2) for local transit traffic transported by BellSouth for third party network providers who have also established Points of Interconnection at those BellSouth local tandems.~~

~~2.8.1When a specified local calling area is served by more than one BellSouth local tandem, AT&T must designate a "home" local tandem for each of its assigned NPA/NXXs and establish trunk connections to such local tandems. Additionally, AT&T may choose to establish a Point of Interconnection at the BellSouth local tandems where it has no codes homing but is not required to do so. AT&T may deliver local traffic to a "home" BellSouth local tandem that is destined for other BellSouth or third party network provider end offices subtending other BellSouth local tandems in the same local calling area where AT&T does not choose to establish a Point of Interconnection. It is AT&T's responsibility to enter its own NPA/NXX local tandem homing arrangements into the LERG either directly or via a vendor in order for other third party network providers to determine appropriate traffic routing to AT&T's codes. Likewise, AT&T shall obtain its routing information from the LERG.~~

~~2.8.2Not withstanding establishing Points of Interconnection to BellSouth's local tandems, AT&T must also establish Points of Interconnection to BellSouth access tandems within the LATA on which AT&T has NPA/NXX's homed for the delivery of Interexchange Carrier Switched Access ("SWA") and toll traffic, and traffic to Type 2A CMRS connections located at the access tandems. BellSouth cannot switch SWA traffic through more than one BellSouth access tandem. SWA, Type 2A CMRS or toll traffic routed to the local tandem in error will not be backhauled to the BellSouth access tandem for completion. (Type 2A CMRS interconnection is defined in BellSouth's General Subscriber Services Tariff, Section A35.)~~

~~2.8.3Bell South shall pass transit traffic to other third party network providers subtending these local tandems. However, AT&T shall be responsible directly to that third party for all reciprocal compensation obligations.'s provisioning of local tandem interconnection assumes that AT&T has the necessary local interconnection arrangement with the other third party network providers subtending those local tandems as required by the Act.~~

~~2.9~~2.3 Fiber Meet

~~2.9.1~~2.3.1 If AT&T elects to establish a Point of Inter~~connection~~face with BellSouth pursuant to a Fiber Meet, AT&T and BellSouth shall jointly engineer and operate a Synchronous Optical Network ("SONET") transmission system by which they shall interconnect their transmission and routing of local traffic via a Local Channel facility at either the DS0, DS1, or DS3 level and shall be ordered via an Access Services Request ("ASR") in the initial phase of this offering. The Parties shall work jointly to determine the specific transmission system. The parties will work cooperatively to establish joint access to transmission overhead signals and commands for such facilities and software. However, AT&T's SONET transmission must be compatible with BellSouth's equipment in the serving wire center. The Parties will work cooperatively in the selection of compatible transmission equipment and software. Fiber Meet will be used for the provision of two-way trunking unless otherwise agreed to by the Parties.

~~2.9.2~~2.3.2 BellSouth shall, wholly at its own expense, procure, install and maintain the agreed upon SONET equipment in the BellSouth Serving Wire Center ("BSWC").

~~2.9.3~~2.3.3 AT&T shall, wholly at its own expense, procure, install and maintain the agreed upon SONET equipment in the AT&T Serving Wire Center ("ASWC").

~~2.9.4~~2.3.4 The parties shall mutually agree upon a Point of Interface outside of the BSWC as a Fiber Meet point and shall make all necessary preparations to receive and to allow and enable delivery of fiber optic facilities into the Point of Interface with sufficient spare length to reach the Point of Interface. A Common Language Location Identification ("CLLI") code will be established for each Point of Interface. The code established must be a building type code. All orders shall originate from the Point of Interface (i.e., Point of Interface to AT&T, Point of Interface to BellSouth).

~~2.9.5~~2.3.5 The Parties shall deliver and maintain their own strands wholly at their own expense. Upon verbal request by either Party, the other Party shall allow access to the Fiber Meet entry point for maintenance purposes as promptly as possible.

~~2.9.6~~2.3.6 The Parties shall jointly coordinate and undertake maintenance of the SONET transmission system. Each Party shall be responsible for maintaining the components of their own SONET transmission system.

~~2.9.7~~2.3.7 Each Party will be responsible for (i) providing its own transport facilities to the Fiber Meet, and (ii) the cost to build-out its facilities to such Fiber Meet.

~~2.9.8~~2.3.8 Neither Party shall charge the other for its portion of the Fiber Meet facility between the ASWC and the BSWC used exclusively for the other Party's local traffic (i.e., the Local Channel). The Parties do not intend to utilize this arrangement for transit traffic.

3. INTERCONNECTION TRUNKING AND ROUTING

3.1 The Parties will convert all existing interconnection arrangements and trunks to the interconnection arrangements described in this Attachment in accordance with the following:

~~3.2~~3.1.1 Within 45 days of either Party's written request, the Parties will mutually develop an operations plan based on sound engineering and operations principles, which will specify the guidelines to convert from the existing interconnection arrangements to the interconnection arrangements described in this Attachment 3. Such guidelines will conform to standard industry practices adopted by and contained in documents published by Industry Forums, including but not limited to, the Alliance for Telecommunications Industry Solutions ("ATIS") and the Ordering and Billing Forum ("OBF").

~~3.3~~3.1.2 Each Party shall bear its own costs to convert from the existing interconnection arrangements to the interconnection arrangements described in this Attachment.

~~3.4~~3.1.3 Unless otherwise mutually agreed, the Parties will complete the conversion within one [1] year of the Requesting Party's written request.

~~3.5~~3.1.4 If, following one [1] year after the Requesting ~~Parth's~~ Party's written request, there exists any interconnection trunks which have not been converted to the interconnection arrangements described in this Attachment 3, then either Party may invoke the dispute resolution proceeding, pursuant to Section 16 of the General Terms and Conditions of this Agreement, incorporated herein by this reference.

~~3.6~~3.2 The Parties will use the following interconnection standards:

~~3.6.1~~3.2.1 The Parties agree to establish Binary 8 Zero Sum Extended Superframe line protocol, where technically feasible.

~~3.6.2~~3.2.2 In those cases where either Party's equipment will not support 64K Clear Channel Capability ("CCC"), the Parties agree to establish AMI line coding. Any AMI line coding will be Superframe formatted. DS3 facilities will be provisioned with C-bit parity.

~~3.6.3~~3.2.3 Where additional equipment is required, such equipment shall be obtained, engineered, and installed to support 64K CCC trunks.

~~3.6.4~~3.2.4 All interconnection facilities between the Parties will be sized according to mutual forecasts developed per the requirements of Section 4.14 of this Attachment 3 and sound engineering practices.

~~3.6.5~~3.2.5 Interconnection will be provided utilizing either a DS1 or DS3 interface or, with the mutual agreement of the Parties, another technically feasible interface (e.g., STS-1).

3.3 Trunking Arrangements

3.3.1 **Local Tandem Interconnection**. This interconnection arrangement allows AT&T to establish interconnection trunk group(s) at BellSouth local tandems for: (1) the delivery of AT&T-originated local traffic transported and terminated by BellSouth to BellSouth end offices within the local calling area as defined in BellSouth's General Subscriber Services Tariff, Section A3 served by those BellSouth local tandems; and (2) for local transit traffic transported by BellSouth for third party network providers who have also established an interconnection trunk group(s) at those BellSouth local tandems.

3.3.1.1 When a specified local calling area is served by more than one BellSouth local tandem, AT&T must designate a "home" local tandem for each of its assigned NPA/NXXs and establish trunk connections to such local tandems. Additionally, AT&T may choose to establish an interconnection trunk group(s) at the BellSouth local tandems where it has no codes homing but is not required to do so. AT&T may deliver local traffic to a "home" BellSouth local tandem that is destined for other BellSouth or third party network provider end offices subtending other BellSouth local tandems in the same local calling area where AT&T does not choose to establish an interconnection trunk group(s). It is AT&T's responsibility to enter its own NPA/NXX local tandem homing arrangements into the LERG either directly or via a vendor in order for other third party network providers to determine appropriate traffic routing to AT&T's codes. Likewise, AT&T shall obtain its routing information from the LERG.

3.3.1.2 Not withstanding establishing interconnection trunk group(s) to BellSouth's local tandems, AT&T must also establish an interconnection trunk group(s) to BellSouth access tandems within the LATA on which AT&T has NPA/NXX's homed for the delivery of Interexchange Carrier Switched Access ("SWA") and toll traffic, and traffic to Type 2A CMRS connections located at the access tandems. BellSouth cannot switch SWA traffic through more than one BellSouth access tandem. SWA, Type 2A CMRS or toll traffic routed to the local tandem in error will not be backhauled to the BellSouth access tandem for completion. (Type 2A CMRS interconnection is defined in BellSouth's General Subscriber Services Tariff, Section A35.)

~~3.6.6~~3.3.1.3 BellSouth shall pass transit traffic to other third party network providers subtending these local tandems. However, AT&T shall be responsible directly to that third party for all reciprocal compensation obligations.

3.3.2 BellSouth and AT&T, upon mutual agreement, shall establish interconnect~~ing~~ion trunk groups and trunking configurations between networks including the establishment of one-way or two-way trunks in accordance with **[Exhibit [redacted] of this Attachment 3, attached hereto and incorporated herein by this reference.] and pursuant to Section [redacted]**

~~3.7.6~~3.3.3 All terms and conditions, as well as charges, both non-recurring and recurring, associated with interconnect~~ing~~on trunk groups between BellSouth and AT&T not addressed in Exhibit A shall be as set forth in the appropriate Party's intrastate or interstate tariff for switched access services. For two-way trunking that carries the Parties' local and intraLATA toll traffic, excluding transit traffic, the Parties shall be compensated for the nonrecurring and recurring charges for trunks and DS1 facilities at 50% of the applicable contractual or tariff rates for the services provided by each Party. AT&T shall be responsible for ordering and paying for any two-way trunks carrying transit traffic.

~~3.8~~3.4 All originating toll free service calls for which the end office Party performs the SSP function, if delivered to the tandem Party, shall be delivered by the end office Party using GR-394 CORE format for IXC bound calls, or using GR-317-CORE format for LEC bound calls.

~~3.9~~3.5 Originating Feature Group B calls delivered to either Party's tandem shall use GR-317-CORE signaling format unless the associated FGB carrier employs GR-394-CORE signaling for its FGB traffic at the serving access tandem.

~~3.10~~3.6 The Parties shall deliver over any trunk groups groomed for a specific access tandem only traffic destined for those publicly-dialable NPA NXX codes served by: (1) end offices that directly subtend the access tandem; and (2) those providers (including, but not limited to CMRS providers, other independent LECs, and CLECs) that directly connect to the access tandem.

~~3.11~~3.7 For BellSouth end offices that do not normally subtend tandem for which calls are routed to that end office on an alternate routing basis, BellSouth will provide AT&T its alternative routing (scheme) arrangements. Where BellSouth utilizes alternative arrangements, it shall deliver any traffic through that alternative routing.

~~3.12~~3.8 The Parties shall deliver over any trunk groups groomed for a specific end office only traffic destined for those publicly-dialable NPA NXX

codes served by that end office, unless otherwise agreed to by the Parties.

~~3.13~~3.9 The source for the routing information for all traffic shall be the LERG, unless otherwise agreed to between the Parties.

~~3.14~~3.10 Where either Party delivers over the local traffic trunk groups miscellaneous calls (e.g., time, weather, 976) destined for the other Party, it shall deliver such traffic in accordance with the serving arrangements defined in the LERG.

~~3.15~~3.11 The Parties will cooperate to establish separate, choke trunk groups for the completion of calls to customers such as radio contest lines. Notwithstanding the foregoing, the Parties agree that where the Parties' switch has the capability to perform call gapping and other protective network traffic management controls, separate trunk groups shall not be required to carry such traffic.

~~3.16~~3.12 N11 code traffic shall be routed between the Parties' networks pursuant to accepted industry practice (e.g., over local traffic trunks or over separate trunk groups).

~~3.17~~3.13 Each Party shall establish procedures whereby its operator bureau will coordinate with the operator bureau of the other Party in order to provide Busy Line Verification/Busy Line Verification Interrupt ("BLV/BLVI") services on calls between their respective line side end users for numbers that are not ported.

~~3.18~~3.14 A blocking standard of one-half of one percent (.005) shall be maintained during the average busy hour for final trunk groups carrying jointly provided exchange access traffic between an end office and an access tandem. All other final trunk groups are to be engineered with a blocking standard of one percent (.01). High usage trunk groups shall be sized to an economic CCS parameter mutually agreed to by both Parties.

~~3.18.1.1~~3.14.1.1 BellSouth agrees to provide upon request of AT&T, pursuant to Section [illegible] of the General Terms and Conditions of this Agreement, traffic usage data (including, but not limited to, usage, peg and overflow counts) for each AT&T NXX subtending the BellSouth tandem to determine which AT&T traffic by NXX is being blocked. [OPEN-AT&T]

~~3.18.1.2~~3.14.1.2 Pursuant to Attachment 9, incorporated herein by this reference, BellSouth shall report to AT&T information regarding blocking of interconnection traffic.

~~3.19~~3.15 The Parties agree to jointly manage the capacity of interconnection trunk groups to encourage the economic deployment of increasingly robust and diverse interconnection between their networks.

[3.23 from 4/28 version open to AT&T]

4. NETWORK DESIGN AND MANAGEMENT FOR INTERCONNECTION

4.1 Network Management and Changes. Both Parties will work cooperatively with each other to install and maintain the most effective and reliable interconnected telecommunications networks, including but not limited to, the exchange of toll-free maintenance contact numbers and escalation procedures. Both Parties agree to provide public notice of changes in the information necessary for the transmission and routing of services using its local exchange facilities or networks, as well as of any other changes that would affect the interoperability of those facilities and networks.

4.2 Interconnection Technical Standards. The interconnection of all networks will be based upon accepted industry/national guidelines for transmission standards and traffic blocking criteria. Interconnecting facilities shall conform, at a minimum, to the technical specifications set forth in the applicable industry standard technical references. Signal transfer point, Signaling System 7 ("SS7") connectivity is required at each interconnection point. BellSouth will provide out-of-band signaling using Common Channel Signaling Access Capability where technically and economically feasible, in accordance with the technical specifications set forth in the applicable industry standard technical references. Facilities of each Party shall provide the necessary on-hook, off-hook answer and disconnect supervision and shall hand off calling number ID (Calling Party Number) when technically feasible.

4.3 Quality of Interconnection. The local interconnection for the transmission and routing of telephone exchange service and exchange access that each Party provides to each other will be at least equal in quality to what it provides to itself and any subsidiary or affiliate, where technically feasible, or to any other Party to which each Party provides local interconnection.

4.4 Common Channel Signaling. Both Parties will provide LEC-to-LEC Common Channel Signaling ("CCS") to each other, where available, in conjunction with all traffic in order to enable full interoperability of CLASS features and functions except for call return. All CCS signaling parameters will be provided, including automatic number identification ("ANI"), originating line information ("OLI") calling company category,

charge number, etc. All privacy indicators will be honored, and each Party will cooperate with each other on the exchange of Transactional Capabilities Application Part ("TCAP") messages to facilitate full interoperability of CCS-based features between the respective networks. The Parties will provide all line information signaling parameters including, but not limited to, Calling Party Number, Charge Number (if it is different from calling party number), and originating line information ("OLI"). For terminating FGD, either Party will pass any CPN it receives from other carriers. All privacy indicators will be honored. Where available, network signaling information such as Transit Network Selection ("TNS") parameter (SS7 environment) will be provided by the end office Party wherever such information is needed for call routing or billing. Where TNS information has not been provided by the end office Party, the tandem Party will route originating exchange access traffic to the IXC using available translations. The Parties will follow all industry Ordering and Billing Forum ("OBF") adopted guidelines pertaining to TNS codes.

4.4.1 BellSouth's Common Channel Signaling Access Service ("CCSAS") allows interconnected carriers to exchange signaling information over a communications path that is separate from the message path.

4.4.2 The transport portion of CCSAS, commonly referred to as a signaling link, is provided via dedicated 56 kbps out of band signaling connections between the AT&T signaling point of interconnection and BellSouth's signaling point of interconnection ("SPOI").

4.4.3 The network termination point where this interconnection takes place is called the Signaling Transfer Point ("STP") port termination.

4.4.4 Charges for signaling links and the STP port termination can be found in Attachment 2 of this Agreement, incorporated herein by this reference.

4.4.5 Each CCSAS signaling connection provides for two-way digital transmission at speeds in multiples of 56 kbps. The connection to BellSouth's STP pair can be made from either AT&T's signaling point ("SP"), which requires a minimum of two links, or from AT&T's STP pair, which requires a minimum of four links.

4.5 SS7 Interconnection will take place at STP locations that are mutually agreed to by the Parties.

4.6 Where CCS is not available, in-band multi-frequency signaling will be provided. In such an arrangement, each Party will outpulse the full ten-digit telephone number of the called party to the other Party with

appropriate call set-up and Automatic Number Identification ("ANI") where available, at parity.

4.7 The Parties will provide CCS to one another, where and as available, in conjunction with access to call related databases and Service Control Points ("SCP"), including toll free databases, Line Information Database ("LIDB"), Calling Name ("CNAM"), and any other necessary databases.

4.8 When the Parties establish new links , each Party shall provide its own STP port termination(s) and charge the other Party for the signaling links as follows

4.8.1 Where the SPOI for the signaling link is at a Fiber Meet, there shall be no compensation between the Parties for the signaling link facilities used.

4.8.2 Where the SPOI for the signaling link facilities is located at the BellSouth Serving Wire Center where the signaling link facilities terminates and AT&T has furnished the interconnection facility, BellSouth will pay a monthly charge equal to one half of the AT&T-provided facility charge according to BellSouth's unbundled rate element for the facility used. Rates for said interconnection facilities shall be as set forth in Exhibit [illegible] in Attachment 2, incorporated herein by this reference.

4.8.3 Where the SPOI for the signaling link facilities is located at the AT&T Serving Wire Center facility where the signaling link facilities terminate and BellSouth has furnished the interconnection facility, AT&T will pay a monthly charge equal to one half of the BellSouth-provided facility charge according to BellSouth's unbundled rate element for the facility used. Rates for said interconnection facilities shall be as set forth in Exhibit [illegible] in Attachment 2, incorporated herein by this reference.

4.8.4 Each party is responsible for all facility maintenance and provisioning on its side of the SPOI.

4.9 Implementation of new interconnection arrangements (as opposed to augmentation of existing arrangements), including testing of SS7 interconnection, shall be pursuant to the technical specifications set forth in the applicable industry standard technical references. Each Party will be expected to provide sufficient cooperative testing resources to ensure proper provisioning, including the ability to confirm that AT&T LERG-assigned NPA NXX codes have been opened, translated and routed accurately in all appropriate BellSouth switches. A mutually agreed test calling plan shall be conducted to ensure successful completion of originating and terminating calls.

4.10 Message Screening

4.10.1 BellSouth shall set message screening parameters so as to accept messages from AT&T local or tandem switching systems destined to any signaling point in the BellSouth SS7 network or any network interconnected to the BellSouth SS7 network with which the AT&T switching system has a legitimate signaling relationship.

4.10.2 BellSouth shall set message screening parameters so as to accept messages destined to/from an AT&T local or tandem switching system or to/from an AT&T Service Control Point ("SCP") from any signaling point or network interconnected to the BellSouth SS7 network with which the AT&T switching system has a legitimate signaling relationship.

4.11 STP Requirements

4.11.1 BellSouth shall provide message transfer part and Signaling Connection Control Point ("SCCP") protocol interfaces in accordance with the technical specifications set forth in the applicable industry standard technical references.

4.12 SS7 Network Interconnection

4.12.1 SS7 Network Interconnection is the interconnection of AT&T STPs and AT&T local or tandem switching systems with the BellSouth STPs. This interconnection provides connectivity that enables the exchange of SS7 messages among BellSouth switching systems and databases, AT&T local or tandem switching systems and other third-party switching systems directly connected to the BellSouth SS7 network.

4.12.2 SS7 Network Interconnection shall provide connectivity to all components of the BellSouth SS7 network. These include:

4.12.2.1 BellSouth local or tandem switching systems;

4.12.2.2 BellSouth databases; and

4.12.2.3 Other third-party local or tandem switching systems.

4.12.3 The connectivity provided by SS7 Network Interconnection shall fully support the functions of BellSouth switching systems and databases and AT&T or other third-party switching systems with [note could be A or D/B link] direct access to the BellSouth SS7 network.

4.12.4 SS7 Network Interconnection shall provide transport for certain types of TCAP messages. If traffic is routed based on dialed or translated digits between an AT&T local switching system and a BellSouth or

other third-party local switching system, either directly or via a BellSouth tandem switching system, then it is a requirement that the BellSouth SS7 network convey via SS7 Network Interconnection the TCAP messages that are necessary to provide Call Management services (Automatic Callback, Automatic Recall, and Screening List Editing) between the AT&T local STPs and the BellSouth or other third-party local switch.

4.12.5 When the capability to route messages based on Intermediate Signaling Network Identifier ("ISNI") is generally available on BellSouth STPs, the BellSouth SS7 Network shall also convey TCAP messages using SS7 Network Interconnection in similar circumstances where the BellSouth switch routes traffic based on a Carrier Identification Code ("CIC").

4.12.6 BellSouth shall offer the following SS7 Network Interconnection options to connect AT&T or AT&T-designated local or tandem switching systems or STPs to the BellSouth SS7 network:

4.12.6.1 A-link interface from AT&T local or tandem switching systems; and

4.12.6.2 D/B-link interface from AT&T STPs.

4.12.7 Each interface shall be provided by one or more sets (layers) of signaling links, as follows:

4.12.7.1 An A-link layer shall consist of two links.

4.12.7.2 A D/B-link layer shall consist of four links.

4.12.8 The Parties agree to implement intraoffice diversity for the signaling links so that no single failure of intraoffice facilities or equipment shall cause the failure of any two links in a layer connecting to a BellSouth STP.

4.12.9 Signaling Call Information. BellSouth and AT&T will send and receive 10 digits for local traffic. Additionally, BellSouth and AT&T will exchange the proper call information, i.e., originated call company number and destination call company number, CIC, and OZZ, including all proper translations for routing between networks and any information necessary for billing.

4.13 Trunk Forecasting and Servicing Requirements.

4.12.1 The Parties shall exchange technical descriptions and forecasts of their interconnection and traffic requirements in sufficient detail necessary to establish the interconnections required to assure traffic completion to and from all customers in their respective designated

service areas. In order for BellSouth to provide as accurate reciprocal trunking forecasts as possible to AT&T, AT&T must timely inform BellSouth of any known or anticipated events that may affect BellSouth reciprocal trunking requirements. If AT&T refuses to provide such information, BellSouth shall provide reciprocal trunking forecasts based only on existing trunk group growth and BellSouth's annual estimated percentage of BellSouth subscriber line growth.

4.13.1 Both Parties shall meet every six months or at otherwise mutually agreeable intervals for the purpose of exchanging non-binding forecast of its traffic and volume requirements for the interconnection and network elements provided under this Agreement, in the form and in such detail as agreed by the Parties. The Parties agree that each forecast provided under this section shall be deemed "Confidential Information" as set forth in Section 18 of the General Terms and Conditions of this Agreement, incorporated herein by this reference.

4.13.2 The trunk forecast should include trunk requirements for all of the interconnecti~~ng~~on trunk groups for the current year plus the next two future years. The forecast meeting between the two companies may be a face-to-face meeting, video conference or audio conference. It may be held regionally or geographically. Ideally, these forecast meetings should be held at least semi-annually, or more often if the forecast is no longer usable. Updates to a forecast or portions thereof should be made whenever the Party providing the forecast deems that the latest trunk requirements exceed the original quantities by 48 trunks or 10%, whichever is greater. Either Party should notify the other Party if they have measurements indicating that a trunk group is exceeding its designed call carrying capacity and is impacting other trunk groups in the network. Also, either Party should notify the other Party if they know of situations in which the traffic load is expected to increase significantly and thus affect the interconnecti~~ng~~on trunk requirements as well as the trunk requirements within the other Party's network. The Parties agree that the forecast information provided under this section shall be deemed "Confidential Information" as set forth in Section 18 of the General Terms and Conditions of this Agreement, incorporated herein by this reference. Each Party shall provide a specified point of contact for planning, forecasting and trunk servicing purposes.

4.13.3 For a non-binding trunk forecast, agreement between the two Parties on the trunk quantities and the timeframe of those trunks does not imply any liability for failure to perform if the trunks are not available for use at the required time.

4.13.4 Both Parties will manage the capacity of their interconnection trunk groups. BellSouth will issue an ASR to AT&T to order changes

BellSouth desires to the BellSouth interconnection trunk groups based on BellSouth's capacity assessment. AT&T will issue an ASR to BellSouthBellSouth to order changes AT&T desires to the AT&T interconnection trunk groups based on AT&T's capacity assessment.

4.13.4.1 Either Party may issue a Trunk Group Service Request ("TGSR") to the other Party to order changes it desires to the interconnection trunk groups based on its capacity assessment. The Party receiving the TGSR will, within ten (10) business days, respond with an ASR or an explanation of why it believes an ASR is inappropriate.

4.13.4.2 The Party submitting an ASR will provide complete and accurate tie down inventory assignments in typical industry bay, panel and jack format, or in such other format as the Parties agree, on each order by use of a Design Layout Record. Additional tie down information, such as span information, may be required when applicable.

4.13.4.3 The Parties will prepare ASRs pursuant to the industry standard guidelines of the OBF. When submitting an ASR, BellSouth will identify AT&T's end office in the SEC LOC field of the ASR form.

4.13.4.4 The Party provisioning the ASR will assign to the requesting Party a location code expressed in CLLI code format that will appear in the Access Customer Terminal Location Field of the ASR.

4.13.5 The standard interval used for the provisioning of additions to local interconnection trunk groups shall be no greater than ten (10) business days, for orders of fewer than ninety-six (96) DS-0 trunks. Other orders shall be determined on an individual case basis. Where feasible, either Party will expedite installation, upon the other Party's request.

4.13.6 Major projects shall be limited to those projects that require the coordination and execution of multiple orders or related activities between and among BellSouth and AT&T work groups specifically relating to: (i) the initial establishment of local interconnection trunk groups; (ii) extending service into a new area; (iii) NXX code moves; (iv) facility grooming; or (v) network rearrangements. If orders that are component pieces of a major project are submitted after project implementation has been jointly planned and coordinated, they shall be submitted with a major project reference. Several orders submitted at one time may not be classified as a major project without the consent of the submitting Party. Each Party will identify a single point of contact that will be responsible for overall coordination and management of a major project through an agreed completion point.

4.13.7 As provided herein, AT&T and BellSouth agree to exchange escalation lists which reflect contact personnel including vice president level officers. These lists shall include name, department, title, phone number, and fax number for each person. AT&T and BellSouth agree to exchange an up-to-date list promptly following changes in personnel or information.

4.14 Interference or Impairment

4.14.1 Within three (3) business days of receipt of notification of blocking of traffic originated within the other Party's network, the Parties shall determine and begin work to implement reasonable corrective measures in a manner consistent with industry practices.

4.15 Local Dialing Parity

4.15.1 BellSouth and AT&T shall provide local and toll dialing parity to each other with no unreasonable dialing delays. Dialing parity shall be provided for all originating telecommunications services that require dialing to route a call. BellSouth and AT&T shall permit similarly situated telephone exchange service end users to dial the same number of digits to make a local telephone call notwithstanding the identity of the end user's or the called party's telecommunications service provider.

5. NETWORK MAINTENANCE

5.1 Outage Repair Standard

5.1.1 In the event of an outage or trouble in any arrangement, facility, or service being provided by BellSouth hereunder, BellSouth will follow procedures for isolating and clearing the outage or trouble that are no less favorable than those that apply to comparable arrangements, facilities, or services being provided by BellSouth to itself, Affiliate or any other carrier whose network is connected to that of BellSouth.

5.2 [BellSouth shall provide AT&T at least sixty (60) days' advance notice of any scheduled maintenance activity which may impact AT&T's end users. Scheduled maintenance shall include, without limitation, such activities as, switch software retrofits, power tests, major equipment replacements and cable rolls. Plans for scheduled maintenance shall include, at a minimum, the following information: location and type of facilities, specific work to be performed, date and time work is scheduled to commence, work schedule to be followed, date and time work is scheduled to be completed, estimated number of work-hours for completion.]

[~~OPEN-AT&T~~]BST proposed the following alternative language on 6/6/01:

Both Parties will work cooperatively with each other to install and maintain the most effective and reliable interconnected telecommunications networks, including but not limited to, the exchange of toll-free maintenance contact numbers and escalation procedures. Both Parties agree to provide public notice of changes in the information necessary for the transmission and routing of services using its local exchange facilities or networks, as well as of any other changes that would affect the interoperability of those facilities and networks pursuant to 47 C.F.R §§51.325 – 51.335.]

5.3 Interconnection Compensation

5.3.1 Compensation for Local Traffic

5.3.1.1 For reciprocal compensation between the Parties pursuan to this Attachment, Local Traffic is defined as ~~means~~ any telephone call that originates and terminates in the same LATA except for those calls that are originated or terminated through switched access arrangements as established by the ruling regulatory body~~and is billed by the originating Party as a local call~~ [when the originating Party has its own switch]. [OPEN-AT&T] Therefore, when an AT&T end user originates traffic and AT&T sends it to BellSouth for termination, AT&T will determine whether the traffic is local or intraLATA toll. When a BellSouth end user originates traffic and BellSouth sends it to AT&T for termination, BellSouth will determine whether the traffic is local or intraLATA toll. Each Party will provide the other with information that will allow it to distinguish local from intraLATA toll traffic. At a minimum, each Party shall utilize NXX's in such a way that the other Party shall be able to distinguish local from intraLATA toll traffic.

DISAGREE

AT&T PROPOSAL: As clarification of this definition and for reciprocal compensation, Local Traffic does include traffic that originates from or terminates to or through an enhanced service provider or information service provider.

BST PROPOSAL: As clarification of this definition and for reciprocal compensation, Local Traffic does not include traffic that originates from or is directed to or through an enhanced service provider or information service provider.

The Parties recognize and agree that the compensation for the transport and termination of Local Traffic are intended to allow each Party to recover costs associated with such traffic. The Parties recognize and agree that such compensation will not be billed and shall not be paid for calls where a Party sets up a call, or colludes with a third party to set up a call, to the other Party's network for the purpose of receiving reciprocal compensation, and not for the purposes of providing a telecommunications service to an end user.

5.3.1.2 The Parties shall provide for the mutual and reciprocal recovery of the costs for the network facilities utilized in transporting and terminating local traffic on each other's network. The Parties agree that charges for transport and termination of calls on their respective networks are as set forth in Exhibit A to this Attachment.

5.3.1.3 For the purposes of this Attachment 3, Common (Shared) Transport is defined as the transport of one Party's traffic by the other Party over the other Party's common (shared) facilities between the other Party's tandem switch and end office switch and/or between the other Party's tandem switches.

5.3.1.4 For the purposes of this Attachment 3, Tandem Switching is defined as the function that establishes a communications path between two switching offices through a third switching office (the Tandem switch).

5.3.1.5 For the purposes of this Attachment 3, End Office Switching is defined as the function that establishes a communications path between the trunk side and line side of the End Office switch.

5.3.1.6 In the event that AT&T elects to offer service within a LATA using a switch located in another LATA, AT&T agrees to provide the transport for both Parties' traffic between the remote AT&T switch and a point (i.e., a facility point of presence) within the LATA in which AT&T offers service. Such facility point of presence shall be deemed to be an AT&T ~~S~~switch ~~Center~~ for the purposes of this Attachment.

5.3.1.7 DISAGREE

AT&T PROPOSAL: ~~**Neither Party shall represent access services traffic (e.g., Internet Protocol Telephony, FGA, FGB, etc.) as Local Traffic for purposes of payment of reciprocal compensation. "Internet Protocol Telephony" is defined as real-time voice conversations over the Internet by converting voices into data which is compressed and split into packets, which are sent over the Internet like any other packets and reassembled as audio output at the receiving end.**~~

BST PROPOSAL: Neither Party shall represent access services traffic (e.g., Internet Protocol Telephony, FGA, FGB, etc.) as Local Traffic for purposes of payment of reciprocal compensation. "Internet Protocol Telephony" is defined as real-time voice conversations over the Internet by converting voices into data which is compressed and split into packets, which are sent over the Internet like any other packets and reassembled as audio output at the receiving end.

5.3.2 **[Unidentifiable traffic. AT&T shall utilize its NPA/NXXs in such a way and will provide the necessary information so that BellSouth shall be able to distinguish local from intraLATA toll traffic for BellSouth originated traffic. AT&T end users assigned NPA/NXX line numbers shall be physically located in the BellSouth rate center with which the NPA/NXX has been associated. Whenever BellSouth delivers traffic to AT&T for termination on the AT&T's network, if BellSouth cannot determine, because of the manner in which AT&T has utilized its NXX codes whether the traffic is local or toll, BellSouth will charge the applicable rates for originating intrastate network access service as reflected in BellSouth's Intrastate Access Services Tariff. BellSouth will make appropriate billing adjustments if AT&T can provide sufficient information for BellSouth to determine whether said traffic is local or toll.] [OPEN-BST]**

5.3.3 Percent Local Use. Each Party will report to the other a Percentage Local Usage ("PLU"). The application of the PLU will determine the amount of local minutes to be billed to the other Party. For purposes of developing the PLU, each Party shall consider every local call and every long distance call, excluding intermediary traffic. BellSouth shall report quarterly PLU factors to AT&T. BellSouth will accept from AT&T monthly PLU factors provided under the previous agreement until the [redacted], at which time AT&T shall report quarterly PLU factors. BellSouth and AT&T shall also provide a positive report updating the PLU. Detailed requirements associated with PLU reporting shall be as set forth in BellSouth's Standard Percent Local Use Reporting Platform for Interconnection Purchasers, as it is amended from time to time during this Agreement. Notwithstanding the foregoing, where the terminating company has message recording technology that identifies the traffic terminated, such information, in lieu of the PLU factor, shall at the company's option be utilized to determine the appropriate reciprocal compensation to be paid.

5.3.4 Percent Local Facility. Each Party shall report to the other a Percent Local Facility ("PLF"). The application of the PLF will determine the portion of switched dedicated transport to be billed per the local jurisdiction rates. The PLF shall be applied to multiplexing, local channel and interoffice channel switched dedicated transport utilized in the provision of local interconnection trunks. Each Party shall update its PLF on the first of January, April, July and October of the year and shall send it to the other Party to be received no later than 30 calendar days after the first of each such month to be effective the first bill period the following month, respectively. Requirements associated with PLU and PLF calculation and reporting shall be as set forth in BellSouth's Percent Local Use/Percent Local Facility Reporting Guidebook, as it is amended from time to time.

5.3.5 Percentage Interstate Usage. For combined interstate and intrastate AT&T traffic terminated by BellSouth over the same facilities, AT&T will be required to provide a projected Percentage Interstate Usage ("PIU") to BellSouth. All jurisdictional report requirements, rules and regulations for Interexchange Carriers specified in BellSouth's Intrastate Access Services Tariff will apply to AT&T. After interstate and intrastate traffic percentages have been determined by use of PIU procedures, the PLU factor will be used for application and billing of local interconnection. Notwithstanding the foregoing, where the terminating company has message recording technology that identifies the traffic terminated, such information, in lieu of the PLU factor, shall at the company's option be utilized to determine the appropriate reciprocal compensation to be paid.

5.3.6 Audits. On thirty (30) days' written notice, each Party must provide the other the ability and opportunity to conduct an annual audit of the traffic reported. BellSouth and AT&T shall retain records of call detail for a minimum of nine months from which a PLU and/or PIU can be ascertained. The audit shall be accomplished during normal business hours at an office designated by the Party being audited. Audit requests shall not be submitted more frequently than one (1) time per calendar year. Audits shall be performed by a mutually acceptable independent auditor paid for by the Party requesting the audit. The PLU and/or PIU shall be adjusted based upon the audit results and shall apply to the usage for the quarter the audit was completed, to the usage for the quarter prior to the completion of the audit, and to the usage for the two quarters following the completion of the audit. If, as a result of an audit, either Party is found to have overstated the PLU and/or PIU by twenty percentage points (20%) or more, that Party shall reimburse the auditing Party for the cost of the audit.

5.4 Compensation for IntraLATA Toll Traffic

5.4.1 IntraLATA Toll Traffic. IntraLATA Toll Traffic is defined as any telephone call that originates and terminates in the same LATA and is billed by the originating Party as a toll call.

5.4.2 Compensation for IntraLATA Toll Traffic. For terminating its IntraLATA Toll Traffic on the other Party's network, the originating Party will pay the terminating Party's intrastate or interstate terminating switched access tariff rates as set forth in the effective intrastate or interstate access services tariff, whichever is appropriate. The appropriate charges will be determined by the routing of the call. If BellSouth or AT&T is the other Party's end user's presubscribed interexchange carrier or if an end user uses BellSouth or AT&T as an interexchange carrier on a 101XXXX basis, BellSouth or AT&T will charge the other Party the appropriate tariff charges for originating switched access services.

5.4.3 Compensation for 800 Traffic. Each Party shall compensate the other pursuant to the appropriate switched access charges, including the database query charge as set forth in the each Party's intrastate or interstate switched access tariffs.

5.4.4 Records for 8YY Billing. Each Party will provide to the other the appropriate records necessary for billing intraLATA 8YY customers. Records required for billing end users purchasing 8YY Services shall be provided pursuant to Attachment 6 of this Agreement, incorporated herein by this reference.

~~5.4.5~~Transit Traffic Service. BellSouth shall provide tandem switching and transport services for AT&T's transit traffic. Transit traffic is traffic originating on AT&T's network that is switched and/or transported by BellSouth and delivered to a third party's network, or traffic originating on a third Party's network that is switched and/or transported by BellSouth and delivered to AT&T's network . Rates for local transit traffic shall be the applicable call transport and termination charges as set forth in Exhibit A to this Attachment. Rates for intraLATA toll and Switched Access transit traffic shall be the applicable call transport and termination charges as set forth in BellSouth Interstate or Intrastate Switched Access tariffs. Switched Access transit traffic presumes that AT&T's end office is subtending the BellSouth Access Tandem for switched access traffic to and from AT&T's end users utilizing BellSouth facilities, either by direct trunks with the IXC, or via the BellSouth Access Tandem. Billing associated with all transit traffic shall be pursuant to MECAB procedures. Wireless Type 1 traffic shall not be treated as transit traffic from a routing or billing perspective. Wireless Type 2A traffic shall not be treated as transit traffic from a routing or billing perspective until BellSouth and the Wireless carrier

have the capability to properly meet-point-bill in accordance with Multiple Exchange Carrier Access Billing ("MECAB") guidelines.

5.4.5 ~~[OSS Rates – To the extend AT&T orders a Service and Element for the purpose of interconnection, the OSS Rates set forth in Exhibit __ of Attachment 2, incorporated herein by this reference, shall apply.] [OPEN-AT&T]~~

ATTACHMENT 3

LOCAL INTERCONNECTION

DISAGREE:

5.3.1.1
5.3.1.7

OPEN-AT&T

1.2
1.5
1.7
1.8
1.9 – 1.11
2.2.2
2.7
3.2 – 3.5
3.6.7
3.18.1.1
4.13.5.3
5.2
5.3.1.1
5.3.3
5.3.3.1
6

OPEN-BST

1.2
1.4.3
1.4.4
1.5
1.7
1.8
1.9 – 1.11
2.2.2
3.2 – 3.5
3.6.6
3.6.7
3.7
3.8
3.9
4.14.1
5.3.2

TABLE OF CONTENTS

1. NETWORK INTERCONNECTION 33
2. METHODS OF INTERCONNECTION 55
3. INTERCONNECTION TRUNKING AND ROUTING 108
4. NETWORK DESIGN AND MANAGEMENT FOR INTERCONNECTIONERROR! BOOKMAI
5. NETWORK MAINTENANCE 2119

EXHIBIT A

EXHIBIT B

EXHIBIT C

EXHIBIT D

EXHIBIT E

EXHIBIT F

LOCAL INTERCONNECTION

OK **1. NETWORK INTERCONNECTION**

OK 1.1 The Parties shall provide interconnection with each other's network for the transmission and routing of telephone exchange service (local) and exchange access (intraLATA toll and switched access).

[redacted] OPEN BellSouth shall provide interconnection with BellSouth's network at any technically feasible point within BellSouth's network. OPEN BST

[redacted] OPEN AT&T shall provide interconnection to BellSouth at any mutually agreed upon point. OPEN BST

[redacted] OPEN AT&T Proposed rmv OPEN BST **[AT&T must establish, at a minimum, a single [redacted] Point of Interconnection with BellSouth within the LATA for the delivery of AT&T's [redacted] local, intraLATA toll terminated to BellSouth and transit traffic terminated to other than BellSouth.][OPEN-BST/AT&T]** If AT&T chooses to interconnect ~~at a~~using a single ~~Point of Interconnection~~interconnection trunk group within a LATA, the interconnection trunk group must be at a BellSouth access or local tandem. Furthermore, AT&T must establish an ~~Points of Interconnection~~interconnection trunk group(s) at all BellSouth access and local tandems where AT&T NXXs are "homed." A "Homing" arrangement is defined by a "Final" Trunk Group between the BellSouth access or local tandem and AT&T End Office switch. A "Final" Trunk Group is the last choice telecommunications path between the access or local tandem and End Office switch. It is AT&T's responsibility to enter its own NPA/NXX access and/or local tandem "homing" arrangements into the national Local Exchange Routing Guide ("LERG"). In order for AT&T to home its NPA/NXX(s) on a BellSouth access or local tandem, AT&T's NPA/NXX(s) must be assigned to an exchange rate center area served by that BellSouth access or local tandem and as specified by BellSouth.

1.3 OK A Point of Presence is the physical location (a structure where the environmental, power, air conditioning, etc. specifications for a Party's terminating equipment can be met) at which a Party establishes itself for obtaining access to the other Party's network. The Point of Presence is the physical location within which the Point(s) of Interface occur.

1.4 OK A Point of Interface is the physical telecommunications interface between BellSouth and AT&T's interconnection facilities. It

establishes the technical interface and point of operational responsibility. The primary purpose of the Point of Interface is to serve as the terminus for each Party's interconnection facilities. The Point of Interface has the following main characteristics:

1.4.1 OK It is a cross-connect point to allow connection, disconnection, transfer or restoration of service.

1.4.2 OK It is a point where BellSouth and AT&T can verify and maintain specific performance objectives.

1.4.3 OK It is specified according to the interfaces offered in this Attachment 3.

[redacted] ? V 5/12 version OK

~~[The Point of Interconnection is the point at which the originating Party delivers its originated traffic to the terminating Party's first point of switching on the terminating Party's common (shared) network for call transport and termination. Points of Interconnection~~Interconnection trunk groups are available at either access tandems, local tandems, End Offices, or any other technically feasible point, as described in this Agreement. AT&T's requested ~~Point of Interconnection~~interconnection trunk ~~will~~groups will also be used for the receipt and delivery of transit traffic at BellSouth access and local tandems. Interconnection trunk groups~~Points of Interconnection~~ established at the BellSouth local tandem apply only to AT&T-originated local and local originating and terminating transit traffic.~~] [OPEN-BST/AT&T]~~

1.6 OK The Parties will work cooperatively to establish the most efficient trunking network in accordance with the provisions set forth in this Attachment 3 and accepted industry practices.

1.7 OK Each party will be responsible for engineering its network (i.e., the underlying facilities on which trunks are provisioned) and providing, or causing to be provided, any necessary equipment on its side of the Point of Interface.] AT&T, at its option, shall establish Points of Presence and Points of Interface for the delivery of its originated local and intraLATA toll traffic to BellSouth. ~~The Point of Interface may not necessarily be established at the Point of Interconnection.~~

Open BST **[BellSouth shall designate the Points of Presence and Points of Interface for the delivery of its originated local and intraLATA toll traffic to AT&T for call transport and termination by AT&T.] [OPEN-BST/AT&T]** Propose delete

[redacted] Open AT&T Get 4 Talbott **[For the purposes of this Attachment 3, Local Channel is defined as a switch transport facility between a Party's Point of Presence and its designated serving wire center.[open AT&T]**

1.10 OK For the purposes of this Attachment 3, Serving Wire Center is defined as the wire center owned or leased by one Party from which the other Party would normally obtain dial tone for its Point of Presence.

[redacted] OPEN Dave AT&T **For the purposes of this Attachment 3, Dedicated Transport is defined as a switch transport facility between a Party's designated serving wire center and the first point of switching on the other Party's common (shared) network.] [OPEN-~~BST/~~AT&T]**

[redacted] **METHODS OF INTERCONNECTION** [redacted]

OK rmv "tion" 2.1 ~~The Parties shall interconnect their networks utilizing one of the following methods in accordance with the provisions set forth in this Attachment 3.~~AT&T may specify one or more of the following methods to interconnec~~tion~~ with the BellSouth network:

2.1.1 OK Collocation - BellSouth shall provide collocation to AT&T pursuant to the terms set forth in Attachment 4 of this Agreement, incorporated herein by this reference. AT&T may, at its option, purchase such collocation at the rates, terms, and conditions set forth in Attachment 4 of this Agreement, incorporated herein by this reference.

[redacted] OPEN AT&T Change seems OK **Leased Facilities - [redacted]. Such leased facilities shall be provided at the rates, terms, and conditions set forth in this Attachment 3. At AT&T's request, it may lease separate facilities for the sole purpose of delivering undipped 8YY traffic from AT&T's end users to BellSouth's Switching Services Port ("SSP") for dipping into BellSouth's toll free database.[BST proposes slight change – open to ATT]** Service Switching Port

[redacted] OPEN AT&T Change seems OK **2.1.3 Third Party Facilities - [redacted] AT&T shall comply with industry standards to maintain network integrity and will be solely responsible for any charges or fees assessed by the third party for use of its facilities.[BST proposes slight change – open to ATT]**

2.1.4 OK Commercial Intra-building Interconnection – where both Parties have constructed broadband facilities into a commercial building (i.e., a

building that is not a telephone central office) and agree to establish a Point of Interface at such location utilizing intra-building cable.

"Fiber Meet" is an interconnection arrangement whereby the Parties physically interconnect their networks via an optical fiber interface (as opposed to an electrical interface), at which one Party's facilities, provisioning, and maintenance responsibility begins and the other Party's responsibility ends (i.e., Point of Interface). A Fiber Meet shall be an arrangement as set forth in [redacted] of this Attachment 3.

2.3

2.1.6 Any other method determined to be technically feasible and requested by AT&T shall be done pursuant to the process defined in Attachment 10 of this Agreement, incorporated herein by this reference.

OK

~~Interconnection by one Party at the premises of the other Party.~~BellSouth may specify one or more of the following to interconnect~~ion~~ with the AT&T network:

interconnection

Collocation - AT&T, at its sole discretion, may permit BellSouth to utilize space and power in AT&T facilities specified by AT&T solely for the purpose of terminating BellSouth's ~~local~~ traffic. BellSouth may request installation of both cable and equipment, or cable only. The pricing, terms and conditions of such arrangement shall be pursuant to Exhibit [redacted] of this Attachment 3, incorporated herein by this reference.

Leased Facilities - where the Party requesting interconnection utilizes the facilities offered by the other Party. Such leased facilities shall be provided at the rates, terms, and conditions set forth in this Attachment 3.[BST proposal to ATT – open to ATT]

OPEN ATT

2.2.2 3/17/13 Page

~~2.2.1~~2.2.3 Third Party Facilities - where BellSouth utilizes the facilities provided by a source other than itself or AT&T. BellSouth shall comply with industry standards to maintain network integrity and will be solely responsible for any charges or fees assessed by the third party for use of its facilities.

OK

2.2.4 Commercial Intra-building Interconnection – where both Parties have constructed broadband facilities into a commercial building (i.e., a building that is not a telephone central office) and agree to establish a Point of Interface at such location utilizing intra-building cable.~~BellSouth shall provide collocation to AT&T pursuant to the terms set forth in Attachment 4 of this Agreement, incorporated herein by this reference. AT&T may, at its option, purchase such collocation at the rates, terms, and conditions set forth in Attachment 4 of this Agreement, incorporated herein by this reference.~~

OK

2.2.5 "Fiber Meet" is an interconnection arrangement whereby the

OK

Not OK

Parties physically interconnect their networks via an optical fiber interface (as opposed to an electrical interface), at which one Party's facilities, provisioning, and maintenance responsibility begins and the other Party's responsibility ends (i.e., Point of Interface). A Fiber Meet shall be an arrangement as set forth in [redacted] of this Attachment 3. [BST proposal to ATT – open to ATT] 2.3

2.2.6 Any other method determined to be technically feasible and requested by BellSouth and agreed to by AT&T shall be done. ~~[AT&T, at its sole discretion, may permit BellSouth to utilize space and power in AT&T facilities specified by AT&T solely for the purpose of terminating BellSouth's local traffic. BellSouth may request installation of both cable and equipment, or cable only. The pricing, terms and conditions of such arrangement shall be pursuant to Exhibit [redacted] of this Attachment 3, incorporated herein by this reference.] [OPEN-BST/AT&T]~~

OK

~~2.3Leased Facilities – where the Party requesting interconnection utilizes the facilities offered by the other Party. Such leased facilities shall be provided at the rates, terms, and conditions set forth in this Attachment 3. At AT&T's request, it may lease separate facilities for the sole purpose of delivering undipped 8YY traffic from AT&T's end users to BellSouth's Switching Services Port ("SSP") for dipping into BellSouth's toll free database.~~

OK

~~2.4Third Party Facilities – where the Party requesting interconnection utilizes the facilities provided by a source other than the Parties to this Agreement. The Party utilizing this option shall comply with industry standards to maintain network integrity and will be solely responsible for any charges or fees assessed by the third party for use of its facilities.~~

~~2.5Commercial Intra-building Interconnection – where both Parties have constructed broadband facilities into a commercial building (i.e., a building that is not a telephone central office) and agree to establish a Point of Interface at such location utilizing intra-building cable.~~

~~2.6"Fiber Meet" is an interconnection arrangement whereby the Parties physically interconnect their networks via an optical fiber interface (as opposed to an electrical interface), at which one Party's facilities, provisioning, and maintenance responsibility begins and the other Party's responsibility ends (i.e., Point of Interface). A Fiber Meet shall be an arrangement as set forth in Section 2.9 of this Attachment 3.~~

~~2.7Any other method determined to be technically feasible and requested by AT&T shall be done pursuant to the process defined in Attachment 10 of this Agreement, incorporated herein by this reference. Any other method determined to be technically feasible and requested by BellSouth and agreed to by AT&T shall be done pursuant to [redacted] [OPEN-AT&T]~~

~~2.8 Local Tandem Interconnection. This interconnection arrangement allows AT&T to establish a Point of Interconnection at BellSouth local tandems for: (1) the delivery of AT&T-originated local traffic transported and terminated by BellSouth to BellSouth end offices within the local calling area as defined in BellSouth's General Subscriber Services Tariff, Section A3 served by those BellSouth local tandems; and (2) for local transit traffic transported by BellSouth for third party network providers who have also established Points of Interconnection at those BellSouth local tandems.~~

OK mvd to 3.3.1

~~2.8.1 When a specified local calling area is served by more than one BellSouth local tandem, AT&T must designate a "home" local tandem for each of its assigned NPA/NXXs and establish trunk connections to such local tandems. Additionally, AT&T may choose to establish a Point of Interconnection at the BellSouth local tandems where it has no codes homing but is not required to do so. AT&T may deliver local traffic to a "home" BellSouth local tandem that is destined for other BellSouth or third party network provider end offices subtending other BellSouth local tandems in the same local calling area where AT&T does not choose to establish a Point of Interconnection. It is AT&T's responsibility to enter its own NPA/NXX local tandem homing arrangements into the LERG either directly or via a vendor in order for other third party network providers to determine appropriate traffic routing to AT&T's codes. Likewise, AT&T shall obtain its routing information from the LERG.~~

OK mvd to 3.3.1.1

~~2.8.2 Not withstanding establishing Points of Interconnection to BellSouth's local tandems, AT&T must also establish Points of Interconnection to BellSouth access tandems within the LATA on which AT&T has NPA/NXX's homed for the delivery of Interexchange Carrier Switched Access ("SWA") and toll traffic, and traffic to Type 2A CMRS connections located at the access tandems. BellSouth cannot switch SWA traffic through more than one BellSouth access tandem. SWA, Type 2A CMRS or toll traffic routed to the local tandem in error will not be backhauled to the BellSouth access tandem for completion. (Type 2A CMRS interconnection is defined in BellSouth's General Subscriber Services Tariff, Section A35.)~~

OK mvd to 3.3.1.2

~~2.8.3 Bell South shall pass transit traffic to other third party network providers subtending these local tandems. However, AT&T shall be responsible directly to that third party for all reciprocal compensation obligations.'s provisioning of local tandem interconnection assumes that AT&T has the necessary local interconnection arrangement with the other third party network providers subtending those local tandems as required by the Act.~~

OK mvd to 3.3.1.3

~~2.9~~2.3 Fiber Meet [redacted]

6/12

OK

[redacted] If AT&T elects to establish a [redacted] with BellSouth pursuant to a Fiber Meet, AT&T and BellSouth shall jointly engineer and operate a Synchronous Optical Network ("SONET") transmission system by which they shall interconnect their transmission and routing of local traffic via a Local Channel facility at either the DS0, DS1, or DS3 level and shall be ordered via an Access Services Request ("ASR") in the initial phase of this offering. The Parties shall work jointly to determine the specific transmission system. The parties will work cooperatively to establish joint access to transmission overhead signals and commands for such facilities and software. However, AT&T's SONET transmission must be compatible with BellSouth's equipment in the serving wire center. The Parties will work cooperatively in the selection of compatible transmission equipment and software. [redacted]

Open BST.

2.9.1.

Bills Tary Rate - BST acknowledged

Part OK

~~2.9.2~~2.3.2 BellSouth shall, wholly at its own expense, procure, install and maintain the agreed upon SONET equipment in the BellSouth Serving Wire Center ("BSWC").

OK

~~2.9.3~~2.3.3 AT&T shall, wholly at its own expense, procure, install and maintain the agreed upon SONET equipment in the AT&T Serving Wire Center ("ASWC").

OK

~~2.9.4~~2.3.4 The parties shall mutually agree upon a Point of Interface outside of the BSWC as a Fiber Meet point and shall make all necessary preparations to receive and to allow and enable delivery of fiber optic facilities into the Point of Interface with sufficient spare length to reach the Point of Interface. A Common Language Location Identification ("CLLI") code will be established for each Point of Interface. The code established must be a building type code. All orders shall originate from the Point of Interface (i.e., Point of Interface to AT&T, Point of Interface to BellSouth).

OK

~~2.9.5~~2.3.5 The Parties shall deliver and maintain their own strands wholly at their own expense. Upon verbal request by either Party, the other Party shall allow access to the Fiber Meet entry point for maintenance purposes as promptly as possible.

OK

~~2.9.6~~2.3.6 The Parties shall jointly coordinate and undertake maintenance of the SONET transmission system. Each Party shall be responsible for maintaining the components of their own SONET transmission system.

OK

~~2.9.7~~2.3.7 Each Party will be responsible for (i) providing its own transport facilities to the Fiber Meet, and (ii) the cost to build-out its facilities to such Fiber Meet.

OK

6/12

~~2.9.8~~2.3.8 Neither Party shall charge the other for its portion of the Fiber Meet facility between the ASWC and the BSWC used exclusively for the other Party's local traffic (i.e., the Local Channel). The Parties do not intend to utilize this arrangement for transit traffic.

OK

3. OK INTERCONNECTION TRUNKING AND ROUTING

3.1 OK The Parties will convert all existing interconnection arrangements and trunks to the interconnection arrangements described in this Attachment in accordance with the following:

~~3.2~~3.1.1 Within 45 days of either Party's written request, the Parties will mutually develop an operations plan based on sound engineering and operations principles, which will specify the guidelines to convert from the existing interconnection arrangements to the interconnection arrangements described in this Attachment 3. Such guidelines will conform to standard industry practices adopted by and contained in documents published by Industry Forums, including but not limited to, the Alliance for Telecommunications Industry Solutions ("ATIS") and the Ordering and Billing Forum ("OBF").

OK

~~3.3~~3.1.2 Each Party shall bear its own costs to convert from the existing interconnection arrangements to the interconnection arrangements described in this Attachment.

OK

~~3.4~~3.1.3 Unless otherwise mutually agreed, the Parties will complete the conversion within one [1] year of the Requesting Party's written request.

OK

~~3.5~~3.1.4 If, following one [1] year after the Requesting ~~Parth's~~ Party's written request, there exists any interconnection trunks which have not been converted to the interconnection arrangements described in this Attachment 3, then either Party may invoke the dispute resolution proceeding, pursuant to Section 16 of the General Terms and Conditions of this Agreement, incorporated herein by this reference.

OK

~~3.6~~3.2 OK The Parties will use the following interconnection standards:

~~3.6.1~~3.2.1 OK The Parties agree to establish Binary 8 Zero Sum Extended Superframe line protocol, where technically feasible.

~~3.6.2~~3.2.2 OK In those cases where either Party's equipment will not support 64K Clear Channel Capability ("CCC"), the Parties agree to establish AMI line coding. Any AMI line coding will be Superframe formatted. DS3 facilities will be provisioned with C-bit parity.

~~3.6.3~~3.2.3 OK Where additional equipment is required, such equipment shall be obtained, engineered, and installed to support 64K CCC trunks.

~~3.6.4~~3.2.4 All interconnection facilities between the Parties will be sized according to mutual forecasts developed per the requirements of Section 4.14 of this Attachment 3 and sound engineering practices.

OK

~~3.6.5~~3.2.5 Interconnection will be provided utilizing either a DS1 or DS3 interface or, with the mutual agreement of the Parties, another technically feasible interface (e.g., STS-1).

OK

3.3 **Trunking Arrangements**

3.3.1 **Local Tandem Interconnection**. This interconnection arrangement allows AT&T to establish interconnection trunk group(s) at BellSouth local tandems for: (1) the delivery of AT&T-originated local traffic transported and terminated by BellSouth to BellSouth end offices within the local calling area as defined in BellSouth's General Subscriber Services Tariff, Section A3 served by those BellSouth local tandems; and (2) for local transit traffic transported by BellSouth for third party network providers who have also established an interconnection trunk group(s) at those BellSouth local tandems.

OK

3.3.1.1 When a specified local calling area is served by more than one BellSouth local tandem, AT&T must designate a "home" local tandem for each of its assigned NPA/NXXs and establish trunk connections to such local tandems. Additionally, AT&T may choose to establish an interconnection trunk group(s) at the BellSouth local tandems where it has no codes homing but is not required to do so. AT&T may deliver local traffic to a "home" BellSouth local tandem that is destined for other BellSouth or third party network provider end offices subtending other BellSouth local tandems in the same local calling area where AT&T does not choose to establish an interconnection trunk group(s). It is AT&T's responsibility to enter its own NPA/NXX local tandem homing arrangements into the LERG either directly or via a vendor in order for other third party network providers to determine appropriate traffic routing to AT&T's codes. Likewise, AT&T shall obtain its routing information from the LERG.

OK

3.3.1.2 Not withstanding establishing interconnection trunk group(s) to BellSouth's local tandems, AT&T must also establish an interconnection trunk group(s) to BellSouth access tandems within the LATA on which AT&T has NPA/NXX's homed for the delivery of Interexchange Carrier Switched Access ("SWA") and toll traffic, and traffic to Type 2A CMRS connections located at the access tandems. BellSouth cannot switch SWA traffic through more than one BellSouth access tandem. SWA, Type 2A CMRS or toll traffic routed to the local tandem in error will not be backhauled to the BellSouth access tandem for completion. (Type 2A CMRS interconnection is defined in BellSouth's General Subscriber Services Tariff, Section A35.)

OK

~~3.6.6~~3.3.1.3 BellSouth shall pass transit traffic to other third party network providers subtending these local tandems. However, AT&T shall be responsible directly to that third party for all reciprocal compensation obligations.

OK

[redacted] BellSouth and AT&T, upon mutual agreement, shall establish interconnect~~ing~~ion trunk groups and trunking configurations between networks including the establishment of one-way or two-way trunks in accordance with [redacted]hereto [redacted] Section [redacted]

Open AT&T Seems OK

~~3.7.6~~3.3.3 All terms and conditions, as well as charges, both non-recurring and recurring, associated with interconnect~~ing~~on trunk groups between BellSouth and AT&T not addressed in Exhibit A shall be as set forth in the appropriate Party's intrastate or interstate tariff for switched access services. For two-way trunking that carries the Parties' local and intraLATA toll traffic, excluding transit traffic, the Parties shall be compensated for the nonrecurring and recurring charges for trunks and DS1 facilities at 50% of the applicable contractual or tariff rates for the services provided by each Party. AT&T shall be responsible for ordering and paying for any two-way trunks carrying transit traffic.

OK

~~3.8~~3.4 All originating toll free service calls for which the end office Party performs the SSP function, if delivered to the tandem Party, shall be delivered by the end office Party using GR-394 CORE format for IXC bound calls, or using GR-317-CORE format for LEC bound calls.

OK

~~3.9~~3.5 Originating Feature Group B calls delivered to either Party's tandem shall use GR-317-CORE signaling format unless the associated FGB carrier employs GR-394-CORE signaling for its FGB traffic at the serving access tandem.

OK

~~3.10~~3.6 The Parties shall deliver over any trunk groups groomed for a specific access tandem only traffic destined for those publicly-dialable NPA NXX codes served by: (1) end offices that directly subtend the access tandem; and (2) those providers (including, but not limited to CMRS providers, other independent LECs, and CLECs) that directly connect to the access tandem.

OK

~~3.11~~3.7 For BellSouth end offices that do not normally subtend tandem for which calls are routed to that end office on an alternate routing basis, BellSouth will provide AT&T its alternative routing (scheme) arrangements. Where BellSouth utilizes alternative arrangements, it shall deliver any traffic through that alternative routing.

OK

~~3.12~~3.8 The Parties shall deliver over any trunk groups groomed for a specific end office only traffic destined for those publicly-dialable NPA NXX

OK

6/12

codes served by that end office, unless otherwise agreed to by the Parties.

~~3.13~~3.9 The source for the routing information for all traffic shall be the LERG, unless otherwise agreed to between the Parties.

~~3.14~~3.10 Where either Party delivers over the local traffic trunk groups miscellaneous calls (e.g., time, weather, 976) destined for the other Party, it shall deliver such traffic in accordance with the serving arrangements defined in the LERG.

~~3.15~~3.11 The Parties will cooperate to establish separate, choke trunk groups for the completion of calls to customers such as radio contest lines. Notwithstanding the foregoing, the Parties agree that where the Parties' switch has the capability to perform call gapping and other protective network traffic management controls, separate trunk groups shall not be required to carry such traffic.

~~3.16~~3.12 N11 code traffic shall be routed between the Parties' networks pursuant to accepted industry practice (e.g., over local traffic trunks or over separate trunk groups).

~~3.17~~3.13 Each Party shall establish procedures whereby its operator bureau will coordinate with the operator bureau of the other Party in order to provide Busy Line Verification/Busy Line Verification Interrupt ("BLV/BLVI") services on calls between their respective line side end users for numbers that are not ported.

~~3.18~~3.14 A blocking standard of one-half of one percent (.005) shall be maintained during the average busy hour for final trunk groups carrying jointly provided exchange access traffic between an end office and an access tandem. All other final trunk groups are to be engineered with a blocking standard of one percent (.01). High usage trunk groups shall be sized to an economic CCS parameter mutually agreed to by both Parties.

[redacted] **BellSouth agrees to provide upon request of AT&T, pursuant to [redacted] the General Terms and Conditions of this Agreement, traffic usage data (including, but not limited to, usage, peg and overflow counts) for each AT&T NXX subtending the BellSouth tandem to determine which AT&T traffic by NXX is being blocked. [OPEN-AT&T]**

~~3.18.1.2~~3.14.1.2 Pursuant to Attachment 9, incorporated herein by this reference, BellSouth shall report to AT&T information regarding blocking of interconnection traffic.

~~3.193~~.15 The Parties agree to jointly manage the capacity of interconnection trunk groups to encourage the economic deployment of increasingly robust and diverse interconnection between their networks.

OK

[redacted] NEW ART

4. **NETWORK DESIGN AND MANAGEMENT FOR INTERCONNECTION**

4.1 Network Management and Changes. Both Parties will work cooperatively with each other to install and maintain the most effective and reliable interconnected telecommunications networks, including but not limited to, the exchange of toll-free maintenance contact numbers and escalation procedures. Both Parties agree to provide public notice of changes in the information necessary for the transmission and routing of services using its local exchange facilities or networks, as well as of any other changes that would affect the interoperability of those facilities and networks.

OK

4.2 Interconnection Technical Standards. The interconnection of all networks will be based upon accepted industry/national guidelines for transmission standards and traffic blocking criteria. Interconnecting facilities shall conform, at a minimum, to the technical specifications set forth in the applicable industry standard technical references. Signal transfer point, Signaling System 7 ("SS7") connectivity is required at each interconnection point. BellSouth will provide out-of-band signaling using Common Channel Signaling Access Capability where technically and economically feasible, in accordance with the technical specifications set forth in the applicable industry standard technical references. Facilities of each Party shall provide the necessary on-hook, off-hook answer and disconnect supervision and shall hand off calling number ID (Calling Party Number) when technically feasible.

OK

4.3 Quality of Interconnection. The local interconnection for the transmission and routing of telephone exchange service and exchange access that each Party provides to each other will be at least equal in quality to what it provides to itself and any subsidiary or affiliate, where technically feasible, or to any other Party to which each Party provides local interconnection.

OK

4.4 Common Channel Signaling. Both Parties will provide LEC-to-LEC Common Channel Signaling ("CCS") to each other, where available, in conjunction with all traffic in order to enable full interoperability of CLASS features and functions except for call return. All CCS signaling parameters will be provided, including automatic number identification ("ANI"), originating line information ("OLI") calling company category,

OK

charge number, etc. All privacy indicators will be honored, and each Party will cooperate with each other on the exchange of Transactional Capabilities Application Part ("TCAP") messages to facilitate full interoperability of CCS-based features between the respective networks. The Parties will provide all line information signaling parameters including, but not limited to, Calling Party Number, Charge Number (if it is different from calling party number), and originating line information ("OLI"). For terminating FGD, either Party will pass any CPN it receives from other carriers. All privacy indicators will be honored. Where available, network signaling information such as Transit Network Selection ("TNS") parameter (SS7 environment) will be provided by the end office Party wherever such information is needed for call routing or billing. Where TNS information has not been provided by the end office Party, the tandem Party will route originating exchange access traffic to the IXC using available translations. The Parties will follow all industry Ordering and Billing Forum ("OBF") adopted guidelines pertaining to TNS codes.

4.4.1 OK BellSouth's Common Channel Signaling Access Service ("CCSAS") allows interconnected carriers to exchange signaling information over a communications path that is separate from the message path.

4.4.2 OK The transport portion of CCSAS, commonly referred to as a signaling link, is provided via dedicated 56 kbps out of band signaling connections between the AT&T signaling point of interconnection and BellSouth's signaling point of interconnection ("SPOI").

4.4.3 OK The network termination point where this interconnection takes place is called the Signaling Transfer Point ("STP") port termination.

4.4.4 OK Charges for signaling links and the STP port termination can be found in Attachment 2 of this Agreement, incorporated herein by this reference.

4.4.5 OK Each CCSAS signaling connection provides for two-way digital transmission at speeds in multiples of 56 kbps. The connection to BellSouth's STP pair can be made from either AT&T's signaling point ("SP"), which requires a minimum of two links, or from AT&T's STP pair, which requires a minimum of four links.

4.5 OK SS7 Interconnection will take place at STP locations that are mutually agreed to by the Parties.

4.6 OK Where CCS is not available, in-band multi-frequency signaling will be provided. In such an arrangement, each Party will outpulse the full ten-digit telephone number of the called party to the other Party with

appropriate call set-up and Automatic Number Identification ("ANI") where available, at parity.

4.7 OK The Parties will provide CCS to one another, where and as available, in conjunction with access to call related databases and Service Control Points ("SCP"), including toll free databases, Line Information Database ("LIDB"), Calling Name ("CNAM"), and any other necessary databases.

4.8 OK When the Parties establish new links , each Party shall provide its own STP port termination(s) and charge the other Party for the signaling links as follows

4.8.1 OK Where the SPOI for the signaling link is at a Fiber Meet, there shall be no compensation between the Parties for the signaling link facilities used.

[redacted] OK Where the SPOI for the signaling link facilities is located at the BellSouth Serving Wire Center where the signaling link facilities terminates and AT&T has furnished the interconnection facility, BellSouth will pay a monthly charge equal to one half of the AT&T-provided facility charge according to BellSouth's unbundled rate element for the facility used. Rates for said interconnection facilities shall be as set forth in Exhibit [redacted] in Attachment 2, incorporated herein by this reference.

[redacted] OK Where the SPOI for the signaling link facilities is located at the AT&T Serving Wire Center facility where the signaling link facilities terminate and BellSouth has furnished the interconnection facility, AT&T will pay a monthly charge equal to one half of the BellSouth-provided facility charge according to BellSouth's unbundled rate element for the facility used. Rates for said interconnection facilities shall be as set forth in Exhibit [redacted] in Attachment 2, incorporated herein by this reference.

4.8.4 OK Each party is responsible for all facility maintenance and provisioning on its side of the SPOI.

4.9 OK Implementation of new interconnection arrangements (as opposed to augmentation of existing arrangements), including testing of SS7 interconnection, shall be pursuant to the technical specifications set forth in the applicable industry standard technical references. Each Party will be expected to provide sufficient cooperative testing resources to ensure proper provisioning, including the ability to confirm that AT&T LERG-assigned NPA NXX codes have been opened, translated and routed accurately in all appropriate BellSouth switches. A mutually agreed test calling plan shall be conducted to ensure successful completion of originating and terminating calls.

4.10 OK Message Screening

4.10.1 BellSouth shall set message screening parameters so as to accept messages from AT&T local or tandem switching systems destined to any signaling point in the BellSouth SS7 network or any network interconnected to the BellSouth SS7 network with which the AT&T switching system has a legitimate signaling relationship. OK

4.10.2 BellSouth shall set message screening parameters so as to accept messages destined to/from an AT&T local or tandem switching system or to/from an AT&T Service Control Point ("SCP") from any signaling point or network interconnected to the BellSouth SS7 network with which the AT&T switching system has a legitimate signaling relationship. OK

4.11 OK STP Requirements

4.11.1 BellSouth shall provide message transfer part and Signaling Connection Control Point ("SCCP") protocol interfaces in accordance with the technical specifications set forth in the applicable industry standard technical references. OK

4.12 OK SS7 Network Interconnection

4.12.1 SS7 Network Interconnection is the interconnection of AT&T STPs and AT&T local or tandem switching systems with the BellSouth STPs. This interconnection provides connectivity that enables the exchange of SS7 messages among BellSouth switching systems and databases, AT&T local or tandem switching systems and other third-party switching systems directly connected to the BellSouth SS7 network. OK

4.12.2 OK SS7 Network Interconnection shall provide connectivity to all components of the BellSouth SS7 network. These include:

4.12.2.1 OK BellSouth local or tandem switching systems;

4.12.2.2 OK BellSouth databases; and

4.12.2.3 OK Other third-party local or tandem switching systems.

4.12.3 OK The connectivity provided by SS7 Network Interconnection shall fully support the functions of BellSouth switching systems and databases and AT&T or other third-party switching systems with [note could be A or D/B link] direct access to the BellSouth SS7 network.

4.12.4 OK SS7 Network Interconnection shall provide transport for certain types of TCAP messages. If traffic is routed based on dialed or translated digits between an AT&T local switching system and a BellSouth or

other third-party local switching system, either directly or via a BellSouth tandem switching system, then it is a requirement that the BellSouth SS7 network convey via SS7 Network Interconnection the TCAP messages that are necessary to provide Call Management services (Automatic Callback, Automatic Recall, and Screening List Editing) between the AT&T local STPs and the BellSouth or other third-party local switch.

4.12.5 When the capability to route messages based on Intermediate Signaling Network Identifier ("ISNI") is generally available on BellSouth STPs, the BellSouth SS7 Network shall also convey TCAP messages using SS7 Network Interconnection in similar circumstances where the BellSouth switch routes traffic based on a Carrier Identification Code ("CIC").

OK

OK

4.12.6 BellSouth shall offer the following SS7 Network Interconnection options to connect AT&T or AT&T-designated local or tandem switching systems or STPs to the BellSouth SS7 network:

4.12.6.1 A-link interface from AT&T local or tandem switching systems; and

4.12.6.2 D/B-link interface from AT&T STPs.

4.12.7 Each interface shall be provided by one or more sets (layers) of signaling links, as follows:

4.12.7.1 An A-link layer shall consist of two links.

4.12.7.2 A D/B-link layer shall consist of four links.

4.12.8 The Parties agree to implement intraoffice diversity for the signaling links so that no single failure of intraoffice facilities or equipment shall cause the failure of any two links in a layer connecting to a BellSouth STP.

4.12.9 Signaling Call Information. BellSouth and AT&T will send and receive 10 digits for local traffic. Additionally, BellSouth and AT&T will exchange the proper call information, i.e., originated call company number and destination call company number, CIC, and OZZ, including all proper translations for routing between networks and any information necessary for billing.

4.13 Trunk Forecasting and Servicing Requirements.

4.12.1 The Parties shall exchange technical descriptions and forecasts of their interconnection and traffic requirements in sufficient detail necessary to establish the interconnections required to assure traffic completion to and from all customers in their respective designated

6/12

O/C

service areas. In order for BellSouth to provide as accurate reciprocal trunking forecasts as possible to AT&T, AT&T must timely inform BellSouth of any known or anticipated events that may affect BellSouth reciprocal trunking requirements. If AT&T refuses to provide such information, BellSouth shall provide reciprocal trunking forecasts based only on existing trunk group growth and BellSouth's annual estimated percentage of BellSouth subscriber line growth.

4.13.1 Both Parties shall meet every six months or at otherwise mutually agreeable intervals for the purpose of exchanging non-binding forecast of its traffic and volume requirements for the interconnection and network elements provided under this Agreement, in the form and in such detail as agreed by the Parties. The Parties agree that each forecast provided under this section shall be deemed "Confidential Information" as set forth in Section 18 of the General Terms and Conditions of this Agreement, incorporated herein by this reference.

4.13.2 The trunk forecast should include trunk requirements for all of the interconnect~~ing~~on trunk groups for the current year plus the next two future years. The forecast meeting between the two companies may be a face-to-face meeting, video conference or audio conference. It may be held regionally or geographically. Ideally, these forecast meetings should be held at least semi-annually, or more often if the forecast is no longer usable. Updates to a forecast or portions thereof should be made whenever the Party providing the forecast deems that the latest trunk requirements exceed the original quantities by 48 trunks or 10%, whichever is greater. Either Party should notify the other Party if they have measurements indicating that a trunk group is exceeding its designed call carrying capacity and is impacting other trunk groups in the network. Also, either Party should notify the other Party if they know of situations in which the traffic load is expected to increase significantly and thus affect the interconnect~~ing~~on trunk requirements as well as the trunk requirements within the other Party's network. The Parties agree that the forecast information provided under this section shall be deemed "Confidential Information" as set forth in Section 18 of the General Terms and Conditions of this Agreement, incorporated herein by this reference. Each Party shall provide a specified point of contact for planning, forecasting and trunk servicing purposes.

4.13.3 For a non-binding trunk forecast, agreement between the two Parties on the trunk quantities and the timeframe of those trunks does not imply any liability for failure to perform if the trunks are not available for use at the required time.

4.13.4 Both Parties will manage the capacity of their interconnection trunk groups. BellSouth will issue an ASR to AT&T to order changes

6/12

BellSouth desires to the BellSouth interconnection trunk groups based on BellSouth's capacity assessment. AT&T will issue an ASR to BellSouthBellSouth to order changes AT&T desires to the AT&T interconnection trunk groups based on AT&T's capacity assessment.

OK

4.13.4.1 Either Party may issue a Trunk Group Service Request ("TGSR") to the other Party to order changes it desires to the interconnection trunk groups based on its capacity assessment. The Party receiving the TGSR will, within ten (10) business days, respond with an ASR or an explanation of why it believes an ASR is inappropriate.

4.13.4.2 The Party submitting an ASR will provide complete and accurate tie down inventory assignments in typical industry bay, panel and jack format, or in such other format as the Parties agree, on each order by use of a Design Layout Record. Additional tie down information, such as span information, may be required when applicable.

4.13.4.3 The Parties will prepare ASRs pursuant to the industry standard guidelines of the OBF. When submitting an ASR, BellSouth will identify AT&T's end office in the SEC LOC field of the ASR form.

4.13.4.4 The Party provisioning the ASR will assign to the requesting Party a location code expressed in CLLI code format that will appear in the Access Customer Terminal Location Field of the ASR.

4.13.5 The standard interval used for the provisioning of additions to local interconnection trunk groups shall be no greater than ten (10) business days, for orders of fewer than ninety-six (96) DS-0 trunks. Other orders shall be determined on an individual case basis. Where feasible, either Party will expedite installation, upon the other Party's request.

4.13.6 Major projects shall be limited to those projects that require the coordination and execution of multiple orders or related activities between and among BellSouth and AT&T work groups specifically relating to: (i) the initial establishment of local interconnection trunk groups; (ii) extending service into a new area; (iii) NXX code moves; (iv) facility grooming; or (v) network rearrangements. If orders that are component pieces of a major project are submitted after project implementation has been jointly planned and coordinated, they shall be submitted with a major project reference. Several orders submitted at one time may not be classified as a major project without the consent of the submitting Party. Each Party will identify a single point of contact that will be responsible for overall coordination and management of a major project through an agreed completion point.

6/12

OK

4.13.7 As provided herein, AT&T and BellSouth agree to exchange escalation lists which reflect contact personnel including vice president level officers. These lists shall include name, department, title, phone number, and fax number for each person. AT&T and BellSouth agree to exchange an up-to-date list promptly following changes in personnel or information.

4.14 Interference or Impairment

4.14.1 Within three (3) business days of receipt of notification of blocking of traffic originated within the other Party's network, the Parties shall determine and begin work to implement reasonable corrective measures in a manner consistent with industry practices.

4.15 Local Dialing Parity

4.15.1 BellSouth and AT&T shall provide local and toll dialing parity to each other with no unreasonable dialing delays. Dialing parity shall be provided for all originating telecommunications services that require dialing to route a call. BellSouth and AT&T shall permit similarly situated telephone exchange service end users to dial the same number of digits to make a local telephone call notwithstanding the identity of the end user's or the called party's telecommunications service provider.

5. NETWORK MAINTENANCE

5.1 Outage Repair Standard

5.1.1 In the event of an outage or trouble in any arrangement, facility, or service being provided by BellSouth hereunder, BellSouth will follow procedures for isolating and clearing the outage or trouble that are no less favorable than those that apply to comparable arrangements, facilities, or services being provided by BellSouth to itself, Affiliate or any other carrier whose network is connected to that of BellSouth.

OPEN AT&T

[BellSouth shall provide AT&T at least sixty (60) days' advance notice of any scheduled maintenance activity which may impact AT&T's end users. Scheduled maintenance shall include, without limitation, such activities as, switch software retrofits, power tests, major equipment replacements and cable rolls. Plans for scheduled maintenance shall include, at a minimum, the following information: location and type of facilities, specific work to be performed, date and time work is scheduled to commence, work schedule to be followed, date and time work is scheduled to be completed, estimated number of work-hours for completion.]

[~~OPEN-AT&T~~]BST proposed the following alternative language on 6/6/01:

OPEN AT&T

Both Parties will work cooperatively with each other to install and maintain the most effective and reliable interconnected telecommunications networks, including but not limited to, the exchange of toll-free maintenance contact numbers and escalation procedures. Both Parties agree to provide public notice of changes in the information necessary for the transmission and routing of services using its local exchange facilities or networks, as well as of any other changes that would affect the interoperability of those facilities and networks pursuant to 47 C.F.R §§51.325 – 51.335.]

BST Proposal

5.3 OK **Interconnection Compensation**

5.3.1 OK Compensation for Local Traffic

[redacted]

OPEN BST

For reciprocal compensation between the Parties pursuant to this Attachment, Local Traffic is defined as ~~means~~ any telephone call that originates and terminates in the same LATA except for those calls that are originated or terminated through switched access arrangements as established by the ruling regulatory body~~and is billed by the originating Party as a local call~~ [when the originating Party has its own switch]. [OPEN-AT&T] Therefore, when an AT&T end user originates traffic and AT&T sends it to BellSouth for termination, AT&T will determine whether the traffic is local or intraLATA toll. When a BellSouth end user originates traffic and BellSouth sends it to AT&T for termination, BellSouth will determine whether the traffic is local or intraLATA toll. Each Party will provide the other with information that will allow it to distinguish local from intraLATA toll traffic. At a minimum, each Party shall utilize NXX's in such a way that the other Party shall be able to distinguish local from intraLATA toll traffic.

DISAGREE

AT&T PROPOSAL: As clarification of this definition and for reciprocal compensation, Local Traffic does include traffic that originates from or terminates to or through an enhanced service provider or information service provider.

BST PROPOSAL: As clarification of this definition and for reciprocal compensation, Local Traffic does not include traffic that originates from or is directed to or through an enhanced service provider or information service provider.

OK

The Parties recognize and agree that the compensation for the transport and termination of Local Traffic are intended to allow each Party to recover costs associated with such traffic. The Parties recognize and agree that such compensation will not be billed and shall not be paid for calls where a Party sets up a call, or colludes with a third party to set up a call, to the other Party's network for the purpose of receiving reciprocal compensation, and not for the purposes of providing a telecommunications service to an end user.

5.3.1.2

OK

The Parties shall provide for the mutual and reciprocal recovery of the costs for the network facilities utilized in transporting and terminating local traffic on each other's network. The Parties agree that charges for transport and termination of calls on their respective networks are as set forth in Exhibit A to this Attachment.

5.3.1.3

OK

For the purposes of this Attachment 3, Common (Shared) Transport is defined as the transport of one Party's traffic by the other Party over the other Party's common (shared) facilities between the other Party's tandem switch and end office switch and/or between the other Party's tandem switches.

5.3.1.4

OK

For the purposes of this Attachment 3, Tandem Switching is defined as the function that establishes a communications path between two switching offices through a third switching office (the Tandem switch).

5.3.1.5

OK

For the purposes of this Attachment 3, End Office Switching is defined as the function that establishes a communications path between the trunk side and line side of the End Office switch.

5.3.1.6

OK

In the event that AT&T elects to offer service within a LATA using a switch located in another LATA, AT&T agrees to provide the transport for both Parties' traffic between the remote AT&T switch and a point (i.e., a facility point of presence) within the LATA in which AT&T offers service. Such facility point of presence shall be deemed to be an AT&T S~~s~~witch ~~Center~~ for the purposes of this Attachment.

~~5.3.1.7~~

OPEN
BST

DISAGREE

AT&T PROPOSAL: ~~**Neither Party shall represent access services traffic (e.g., Internet Protocol Telephony, FGA, FGB, etc.) as Local Traffic for purposes of payment of reciprocal compensation. "Internet Protocol Telephony" is defined as real-time voice conversations over the Internet by converting voices into data which is compressed and split into packets, which are sent over the Internet like any other packets and reassembled as audio output at the receiving end.**~~

BST PROPOSAL: Neither Party shall represent access services traffic (e.g., Internet Protocol Telephony, FGA, FGB, etc.) as Local Traffic for purposes of payment of reciprocal compensation. "Internet Protocol Telephony" is defined as real-time voice conversations over the Internet by converting voices into data which is compressed and split into packets, which are sent over the Internet like any other packets and reassembled as audio output at the receiving end.

5.3.2 **[Unidentifiable traffic. AT&T shall utilize its NPA/NXXs in such a way and will provide the necessary information so that BellSouth shall be able to distinguish local from intraLATA toll traffic for BellSouth originated traffic. AT&T end users assigned NPA/NXX line numbers shall be physically located in the BellSouth rate center with which the NPA/NXX has been associated. Whenever BellSouth delivers traffic to AT&T for termination on the AT&T's network, if BellSouth cannot determine, because of the manner in which AT&T has utilized its NXX codes whether the traffic is local or toll, BellSouth will charge the applicable rates for originating intrastate network access service as reflected in BellSouth's Intrastate Access Services Tariff. BellSouth will make appropriate billing adjustments if AT&T can provide sufficient information for BellSouth to determine whether said traffic is local or toll.] [OPEN-BST]**

OPEN BST

5.3.3 Percent Local Use. Each Party will report to the other a Percentage Local Usage ("PLU"). The application of the PLU will determine the amount of local minutes to be billed to the other Party. For purposes of developing the PLU, each Party shall consider every local call and every long distance call, excluding intermediary traffic. BellSouth shall report quarterly PLU factors to AT&T. BellSouth will accept from AT&T monthly PLU factors provided under the previous agreement until the [redacted], at which time AT&T shall report quarterly PLU factors. BellSouth and AT&T shall also provide a positive report updating the PLU. Detailed requirements associated with PLU reporting shall be as set forth in BellSouth's Standard Percent Local Use Reporting Platform for Interconnection Purchasers, as it is amended from time to time during this Agreement. Notwithstanding the foregoing, where the terminating company has message recording technology that identifies the traffic terminated, such information, in lieu of the PLU factor, shall at the company's option be utilized to determine the appropriate reciprocal compensation to be paid.

OK

5.3.4 Percent Local Facility. Each Party shall report to the other a Percent Local Facility ("PLF"). The application of the PLF will determine the portion of switched dedicated transport to be billed per the local jurisdiction rates. The PLF shall be applied to multiplexing, local channel and interoffice channel switched dedicated transport utilized in the provision of local interconnection trunks. Each Party shall update its PLF on the first of January, April, July and October of the year and shall send it to the other Party to be received no later than 30 calendar days after the first of each such month to be effective the first bill period the following month, respectively. Requirements associated with PLU and PLF calculation and reporting shall be as set forth in BellSouth's Percent Local Use/Percent Local Facility Reporting Guidebook, as it is amended from time to time.

OK

5.3.5 Percentage Interstate Usage. For combined interstate and intrastate AT&T traffic terminated by BellSouth over the same facilities, AT&T will be required to provide a projected Percentage Interstate Usage ("PIU") to BellSouth. All jurisdictional report requirements, rules and regulations for Interexchange Carriers specified in BellSouth's Intrastate Access Services Tariff will apply to AT&T. After interstate and intrastate traffic percentages have been determined by use of PIU procedures, the PLU factor will be used for application and billing of local interconnection. Notwithstanding the foregoing, where the terminating company has message recording technology that identifies the traffic terminated, such information, in lieu of the PLU factor, shall at the company's option be utilized to determine the appropriate reciprocal compensation to be paid.

OK

5.3.6 Audits. On thirty (30) days' written notice, each Party must provide the other the ability and opportunity to conduct an annual audit of the traffic reported. BellSouth and AT&T shall retain records of call detail for a minimum of nine months from which a PLU and/or PIU can be ascertained. The audit shall be accomplished during normal business hours at an office designated by the Party being audited. Audit requests shall not be submitted more frequently than one (1) time per calendar year. Audits shall be performed by a mutually acceptable independent auditor paid for by the Party requesting the audit. The PLU and/or PIU shall be adjusted based upon the audit results and shall apply to the usage for the quarter the audit was completed, to the usage for the quarter prior to the completion of the audit, and to the usage for the two quarters following the completion of the audit. If, as a result of an audit, either Party is found to have overstated the PLU and/or PIU by twenty percentage points (20%) or more, that Party shall reimburse the auditing Party for the cost of the audit.

OK

5.4 OK Compensation for IntraLATA Toll Traffic

5.4.1 OK IntraLATA Toll Traffic. IntraLATA Toll Traffic is defined as any telephone call that originates and terminates in the same LATA and is billed by the originating Party as a toll call.

5.4.2 OK Compensation for IntraLATA Toll Traffic. For terminating its IntraLATA Toll Traffic on the other Party's network, the originating Party will pay the terminating Party's intrastate or interstate terminating switched access tariff rates as set forth in the effective intrastate or interstate access services tariff, whichever is appropriate. The appropriate charges will be determined by the routing of the call. If BellSouth or AT&T is the other Party's end user's presubscribed interexchange carrier or if an end user uses BellSouth or AT&T as an interexchange carrier on a 101XXXX basis, BellSouth or AT&T will charge the other Party the appropriate tariff charges for originating switched access services.

5.4.3 OK Compensation for 800 Traffic. Each Party shall compensate the other pursuant to the appropriate switched access charges, including the database query charge as set forth in the each Party's intrastate or interstate switched access tariffs.

5.4.4 OK Records for 8YY Billing. Each Party will provide to the other the appropriate records necessary for billing intraLATA 8YY customers. Records required for billing end users purchasing 8YY Services shall be provided pursuant to Attachment 6 of this Agreement, incorporated herein by this reference.

5.4.5 Transit Traffic Service. BellSouth shall provide tandem switching and transport services for AT&T's transit traffic. Transit traffic is traffic originating on AT&T's network that is switched and/or transported by BellSouth and delivered to a third party's network, or traffic originating on a third Party's network that is switched and/or transported by BellSouth and delivered to AT&T's network . Rates for local transit traffic shall be the applicable call transport and termination charges as set forth in Exhibit A to this Attachment. Rates for intraLATA toll and Switched Access transit traffic shall be the applicable call transport and termination charges as set forth in BellSouth Interstate or Intrastate Switched Access tariffs. Switched Access transit traffic presumes that AT&T's end office is subtending the BellSouth Access Tandem for switched access traffic to and from AT&T's end users utilizing BellSouth facilities, either by direct trunks with the IXC, or via the BellSouth Access Tandem. Billing associated with all transit traffic shall be pursuant to MECAB procedures. Wireless Type 1 traffic shall not be treated as transit traffic from a routing or billing perspective. Wireless Type 2A traffic shall not be treated as transit traffic from a routing or billing perspective until BellSouth and the Wireless carrier

OPEN ATT We'll agree to language

Is Bill's lang w/ new stuff?

have the capability to properly meet-point-bill in accordance with Multiple Exchange Carrier Access Billing ("MECAB") guidelines.

[redacted] ~~[OSS Rates – To the extend AT&T orders a Service and Element for the purpose of interconnection, the OSS Rates set forth in Exhibit __ of Attachment 2, incorporated herein by this reference, shall apply.] [OPEN-AT&T]~~

OPEN AT&T

Language other than agreed to

1.1.1
1.1.2
1.7
3.17
5.2 (both true carriers, are not in here)

ATTACHMENT 3

LOCAL INTERCONNECTION

DISAGREE:

5.3.1.1
5.3.1.7

OPEN-AT&T	**OPEN-BST**
1.2	1.2
1.5	1.4.3
1.7	1.4.4
1.8	1.5
1.9 – 1.11	1.7
2.2.2	1.8
2.7	1.9 – 1.11
3.2 – 3.5	2.2.2
3.6.7	3.2 – 3.5
3.18.1.1	3.6.6
4.13.5.3	3.6.7
5.2	3.7
5.3.1.1	3.8
5.3.3	3.9
5.3.3.1	4.14.1
6	5.3.2

LOCAL INTERCONNECTION

1. NETWORK INTERCONNECTION

1.1 The Parties shall provide interconnection with each other's network for the transmission and routing of telephone exchange service (local) and exchange access (intraLATA toll and switched access).

1.1.1 BellSouth shall provide interconnection with BellSouth's network at any technically feasible point within BellSouth's network as described in 47 CFR §51.305..

1.1.2 AT&T shall provide interconnection to BellSouth at any mutually agreed upon point.

1.2 **[AT&T must establish, at a minimum, a single Point of Presence, ~~Point~~; and ~~Point of I~~interconnection trunk group with BellSouth within the LATA for the delivery of AT&T's originated local, intraLATA toll terminated to BellSouth and transit traffic terminated to other than BellSouth.][OPEN-~~BST/~~AT&T]** If AT&T chooses to interconnect using a single interconnection trunk group within a LATA, the interconnection trunk group must be at a BellSouth access or local tandem. Furthermore, AT&T must establish an interconnection trunk group(s) at all BellSouth access and local tandems where AT&T NXXs are "homed." A "Homing" arrangement is defined by a "Final" Trunk Group between the BellSouth access or local tandem and AT&T End Office switch. A "Final" Trunk Group is the last choice telecommunications path between the access or local tandem and End Office switch. It is AT&T's responsibility to enter its own NPA/NXX access and/or local tandem "homing" arrangements into the national Local Exchange Routing Guide ("LERG"). In order for AT&T to home its NPA/NXX(s) on a BellSouth access or local tandem, AT&T's NPA/NXX(s) must be assigned to an exchange rate center area served by that BellSouth access or local tandem and as specified by BellSouth.

1.3 A Point of Presence is the physical location (a structure where the environmental, power, air conditioning, etc. specifications for a Party's terminating equipment can be met) at which a Party establishes itself for obtaining access to the other Party's network. The Point of Presence is the physical location within which the Point(s) of Interface occur.

traffic volumes and patterns, facilities available, and other factors unique to the area. If the Parties are not able to reach mutual agreement on an initial Point of Interface within 30 calendar days of the date of the written request, each Party will designate the initial Point of Interface for its originated traffic.

1.8.1 Additional Points of Interface in a particular LATA may be established by mutual agreement of the Parties. Absent mutual agreement, in order to establish additional Points of Interface in a LATA, the traffic originated from AT&T or BellSouth at the proposed additional Point of Interface must exceed 8.9 million minutes of local of ISP-bound traffic per month for three consecutive months. Additionally, any end office to be designated as a Point of Interface must be more than 25 miles from an existing Point of Interface. BellSouth will not designate a Point of Interface at a Central Office where physical or virtual collocation space or BellSouth fiber connectivity is not available.

1.8.2 Upon written notification from the Party requesting the establishment of an additional Point of Interface, the receiving Party has 45 calendar days to analyze, respond to, and negotiate in good faith the establishment of and location of such additional Point of Interface. If the receiving Party disagrees that the traffic and mileage thresholds set forth herein have been met, then such Party may utilize the dispute resolution procedure set forth in this Agreement. The Parties recognize that they have in their networks existing Points of Interface established under previous interconnection agreements. The Parties further recognize that there do exist network areas that would immediately qualify under the signing of this agreement to be established as Additional Points of Interface. The Parties agree, effective as of the date of signature of this Agreement, that such existing network areas will be transitioned to Additional Points of Interface in accordance with the following schedule: for the first year of this Agreement, no more than 1 existing network area will be transitioned to an Additional Point of Interface per LATA per 6 months. For the remaining term of this Agreement, no more than 2 existing network areas will be transitioned to Additional Points of Interface per LATA per 6 months. This schedule in no way limits the establishment of Additional Points of Interface for traffic patterns that did not exist at the time the Parties' entered into this Agreement.

[For the purposes of this Attachment 3, Local Channel is defined as a switch transport facility between a Party's Point of Presence and its designated serving wire center.[open AT&T]

2.1.6 Any other method determined to be technically feasible and requested by AT&T shall be done pursuant to the process defined in Attachment 10 of this Agreement, incorporated herein by this reference.

2.2 BellSouth may specify one or more of the following to interconnect with the AT&T network:

[redacted] 0742 BST AT&T

Collocation - AT&T, at its sole discretion, may permit BellSouth to utilize space and power in AT&T facilities specified by AT&T solely for the purpose of terminating BellSouth's **local** traffic. BellSouth may request installation of both cable and equipment, or cable only. The pricing, terms and conditions of such arrangement shall be pursuant to Exhibit _ of this Attachment 3, incorporated herein by this reference**[use of word local opening pending resolution of interconnection traffic issue]**.

2.2.2 Leased Facilities - where the Party requesting interconnection utilizes the facilities offered by the other Party. Such leased facilities shall be provided at the rates, terms, and conditions set forth in this Attachment 3.

2.2.3 Third Party Facilities - where BellSouth utilizes the facilities provided by a source other than itself or AT&T. BellSouth shall comply with industry standards to maintain network integrity and will be solely responsible for any charges or fees assessed by the third party for use of its facilities.

2.2.4 Commercial Intra-building Interconnection – where both Parties have constructed broadband facilities into a commercial building (i.e., a building that is not a telephone central office) and agree to establish a Point of Interface at such location utilizing intra-building cable.

2.2.5 "Fiber Meet" is an interconnection arrangement whereby the Parties physically interconnect their networks via an optical fiber interface (as opposed to an electrical interface), at which one Party's facilities, provisioning, and maintenance responsibility begins and the other Party's responsibility ends (i.e., Point of Interface). A Fiber Meet shall be an arrangement as set forth in **Section 2.9** of this Attachment 3.

2.2.6 Any other method determined to be technically feasible and requested by BellSouth and agreed to by AT&T shall be done.

2.3 Fiber Meet

2.3.1 If AT&T elects to establish a Point of Interface with BellSouth pursuant to a Fiber Meet, AT&T and BellSouth shall jointly engineer and

2.3.8 Neither Party shall charge the other for its portion of the Fiber Meet facility between the ASWC and the BSWC used exclusively for the other Party's local traffic (i.e., the Local Channel). The Parties do not intend to utilize this arrangement for transit traffic.

3. INTERCONNECTION TRUNKING AND ROUTING

3.1 The Parties will convert all existing interconnection arrangements and trunks to the interconnection arrangements described in this Attachment in accordance with the following:

3.1.1 Within 45 days of either Party's written request, the Parties will mutually develop an operations plan based on sound engineering and operations principles, which will specify the guidelines to convert from the existing interconnection arrangements to the interconnection arrangements described in this Attachment 3. Such guidelines will conform to standard industry practices adopted by and contained in documents published by Industry Forums, including but not limited to, the Alliance for Telecommunications Industry Solutions ("ATIS") and the Ordering and Billing Forum ("OBF").

3.1.2 Each Party shall bear its own costs to convert from the existing interconnection arrangements to the interconnection arrangements described in this Attachment.

3.1.3 Unless otherwise mutually agreed, the Parties will complete the conversion within one [1] year of the Requesting Party's written request.

3.1.4 If, following one [1] year after the Requesting Party's written request, there exists any interconnection trunks which have not been converted to the interconnection arrangements described in this Attachment 3, then either Party may invoke the dispute resolution proceeding, pursuant to Section 16 of the General Terms and Conditions of this Agreement, incorporated herein by this reference.

3.2 The Parties will use the following interconnection standards:

3.2.1 The Parties agree to establish Binary 8 Zero Sum Extended Superframe line protocol, where technically feasible.

3.2.2 In those cases where either Party's equipment will not support 64K Clear Channel Capability ("CCC"), the Parties agree to establish AMI line coding. Any AMI line coding will be Superframe formatted. DS3 facilities will be provisioned with C-bit parity.

tandem in error will not be backhauled to the BellSouth access tandem for completion. (Type 2A CMRS interconnection is defined in BellSouth's General Subscriber Services Tariff, Section A35.)

3.3.1.3 BellSouth shall pass transit traffic to other third party network providers subtending these local tandems. However, AT&T shall be responsible directly to that third party for all reciprocal compensation obligations.

[redacted] **BellSouth and AT&T, upon mutual agreement, shall establish interconnection trunk groups and trunking configurations between networks including the establishment of one-way or two-way trunks in accordance with [Exhibit ___ of this Attachment 3, attached hereto and incorporated herein by this reference.] and pursuant to Section 1.2 [open pending resolution of trunk group architectures]**

OPEN BST + AT&T

3.3.3 All terms and conditions, as well as charges, both non-recurring and recurring, associated with interconnection trunk groups between BellSouth and AT&T not addressed in Exhibit A shall be as set forth in the appropriate Party's intrastate or interstate tariff for switched access services. For two-way trunking that carries the Parties' local and intraLATA toll traffic, excluding transit traffic, the Parties shall be compensated for the nonrecurring and recurring charges for trunks and DS1 facilities at 50% of the applicable contractual or tariff rates for the services provided by each Party. AT&T shall be responsible for ordering and paying for any two-way trunks carrying transit traffic.

3.4 All originating toll free service calls for which the end office Party performs the SSP function, if delivered to the tandem Party, shall be delivered by the end office Party using GR-394 CORE format for IXC bound calls, or using GR-317-CORE format for LEC bound calls.

3.5 Originating Feature Group B calls delivered to either Party's tandem shall use GR-317-CORE signaling format unless the associated FGB carrier employs GR-394-CORE signaling for its FGB traffic at the serving access tandem.

3.6 The Parties shall deliver over any trunk groups groomed for a specific access tandem only traffic destined for those publicly-dialable NPA NXX codes served by: (1) end offices that directly subtend the access tandem; and (2) those providers (including, but not limited to CMRS providers, other independent LECs, and CLECs) that directly connect to the access tandem.

Agreement, traffic usage data (including, but not limited to, usage, peg and overflow counts) for each AT&T NXX subtending the BellSouth tandem to determine which AT&T traffic by NXX is being blocked. [OPEN-BST]

3.14.1.2 Pursuant to Attachment 9, incorporated herein by this reference, BellSouth shall report to AT&T information regarding blocking of interconnection traffic.

3.15 The Parties agree to jointly manage the capacity of interconnection trunk groups to encourage the economic deployment of increasingly robust and diverse interconnection between their networks.

3.16 BellSouth Access Tandem Interconnection Architectures

[redacted] BellSouth Access Tandem Interconnection provides intratandem access to subtending end offices. AT&T may choose which type of trunking architecture to use from the trunking architectures described in this Attachment 3. However, if both Parties' originated local and/or intraLATA toll traffic is utilizing the same two-way trunk group, the Parties shall mutually agree to use this type of two-way interconnection trunk group with the quantity of trunks being mutually determined and the provisioning being jointly coordinated. Furthermore, the IP(s) for two-way interconnection trunk groups transporting both Parties local and/or intraLATA toll shall be mutually agreed upon. AT&T shall order such two-way trunks via the Access Service Request (ASR) process in place for Local Interconnection upon determination by the Parties, in a joint planning meeting, that such trunk groups shall be utilized. BellSouth will use the Trunk Group Service Request (TGSR) to request changes in trunking. Both Parties reserve the right to issue ASRs, if so required, in the normal course of business. Furthermore, the Parties shall jointly review such trunk performance and forecasts on a periodic basis. The Parties use of two-way interconnection trunk groups for the transport of local and/or intraLATA toll traffic between the Parties does not preclude either Party from establishing additional one-way interconnection trunks for the delivery of its originated local and/or intraLATA toll traffic to the other Party. Any AT&T interconnection request that deviates from the interconnection trunk group architectures as described in this Agreement that affects traffic delivered to AT&T from a BellSouth switch that requires special BellSouth switch translations and other network modifications will require AT&T to submit a Bona Fide Request/New Business Request (BFR/NBR) via the BFR/NBR Process set forth in this Agreement.

[redacted] Standard Trunking Interconnection

AT&T 4/28 version referred to this as Preferred Trunking Inter

BellSouth must agree to the Two-way Trunking Rules. In addition, a two-way transit trunk group must be established for AT&T's originating and terminating Transit Traffic. This group carries intratandem Transit Traffic between AT&T and Independent Companies, Interexchange Carriers, other CLECs and other network providers with which AT&T desires interconnection and has the proper contractual arrangements. This group also carries AT&T originated intertandem traffic transiting a single BellSouth access tandem destined to third party tandems such as an Independent Company tandem or other CLEC tandem. Other trunk groups for operator services, directory assistance, emergency services and intercept may be established if requ~~ired~~ested by AT&T. The LERG should be referenced for current routing and tandem serving arrangements. Two-Way Trunk Interconnection is illustrated in Exhibit E.

OK

3.20 Supergroup Interconnection

3.20.1 In the Supergroup Interconnection arrangement, the Parties Local and IntraLATA Toll and AT&T's Transit Traffic is exchanged on a single two-way trunk group between AT&T and BellSouth. AT&T and BellSouth must agree to the Two-way Trunking Rules in order to establish this architecture. This group carries intratandem Transit Traffic between AT&T and Independent Companies, Interexchange Carriers, other CLECs and other network providers with which AT&T desires interconnection and has the proper contractual arrangements. This group also carries AT&T originated intertandem traffic transiting a single BellSouth access tandem destined to third party tandems such as an Independent Company tandem or other CLEC tandem. Other trunk groups for operator services, directory assistance, emergency services and intercept may be established if requ~~ired~~ested. The LERG should be referenced for current routing and tandem serving arrangements. Supergroup Interconnection is illustrated in Exhibit F.

OK

3.21 BellSouth End Office Interconnection

3.21.1 AT&T may establish interconnection at BellSouth end offices for the delivery of AT&T originated local and intralata toll traffic destined for BellSouth end-users served by that end-office.

3.21.2 When end office trunking is ordered by BellSouth to deliver BellSouth originated traffic to AT&T, BellSouth will provide overflow routing through BellSouth tandems consistent with how BellSouth overflows it's traffic. The overflow will be based on the homing arrangements AT&T displays in the LERG. Likewise, if AT&T interconnects to a BellSouth end office for delivery of AT&T originated traffic, AT&T will

exchange of Transactional Capabilities Application Part ("TCAP") messages to facilitate full interoperability of CCS-based features between the respective networks. The Parties will provide all line information signaling parameters including, but not limited to, Calling Party Number, Charge Number (if it is different from calling party number), and originating line information ("OLI"). For terminating FGD, either Party will pass any CPN it receives from other carriers. All privacy indicators will be honored. Where available, network signaling information such as Transit Network Selection ("TNS") parameter (SS7 environment) will be provided by the end office Party wherever such information is needed for call routing or billing. Where TNS information has not been provided by the end office Party, the tandem Party will route originating exchange access traffic to the IXC using available translations. The Parties will follow all industry Ordering and Billing Forum ("OBF") adopted guidelines pertaining to TNS codes.

4.4.1 BellSouth's Common Channel Signaling Access Service ("CCSAS") allows interconnected carriers to exchange signaling information over a communications path that is separate from the message path.

4.4.2 The transport portion of CCSAS, commonly referred to as a signaling link, is provided via dedicated 56 kbps out of band signaling connections between the AT&T signaling point of interconnection and BellSouth's signaling point of interconnection ("SPOI").

4.4.3 The network termination point where this interconnection takes place is called the Signaling Transfer Point ("STP") port termination.

4.4.4 Charges for signaling links and the STP port termination can be found in Attachment 2 of this Agreement, incorporated herein by this reference.

4.4.5 Each CCSAS signaling connection provides for two-way digital transmission at speeds in multiples of 56 kbps. The connection to BellSouth's STP pair can be made from either AT&T's signaling point ("SP"), which requires a minimum of two links, or from AT&T's STP pair, which requires a minimum of four links.

4.5 SS7 Interconnection will take place at STP locations that are mutually agreed to by the Parties.

4.6 Where CCS is not available, in-band multi-frequency signaling will be provided. In such an arrangement, each Party will outpulse the full ten-digit telephone number of the called party to the other Party with

switches. A mutually agreed test calling plan shall be conducted to ensure successful completion of originating and terminating calls.

4.10 Message Screening

4.10.1 BellSouth shall set message screening parameters so as to accept messages from AT&T local or tandem switching systems destined to any signaling point in the BellSouth SS7 network or any network interconnected to the BellSouth SS7 network with which the AT&T switching system has a legitimate signaling relationship.

4.10.2 BellSouth shall set message screening parameters so as to accept messages destined to/from an AT&T local or tandem switching system or to/from an AT&T Service Control Point ("SCP") from any signaling point or network interconnected to the BellSouth SS7 network with which the AT&T switching system has a legitimate signaling relationship.

4.11 STP Requirements

4.11.1 BellSouth shall provide message transfer part and Signaling Connection Control Point ("SCCP") protocol interfaces in accordance with the technical specifications set forth in the applicable industry standard technical references.

4.12 SS7 Network Interconnection

4.12.1 SS7 Network Interconnection is the interconnection of AT&T STPs and AT&T local or tandem switching systems with the BellSouth STPs. This interconnection provides connectivity that enables the exchange of SS7 messages among BellSouth switching systems and databases, AT&T local or tandem switching systems and other third-party switching systems directly connected to the BellSouth SS7 network.

4.12.2 SS7 Network Interconnection shall provide connectivity to all components of the BellSouth SS7 network. These include:

4.12.2.1 BellSouth local or tandem switching systems;

4.12.2.2 BellSouth databases; and

4.12.2.3 Other third-party local or tandem switching systems.

4.12.3 The connectivity provided by SS7 Network Interconnection shall fully support the functions of BellSouth switching systems and databases and AT&T or other third-party switching systems with [note could be A or D/B link] direct access to the BellSouth SS7 network.

4.12.1 The Parties shall exchange technical descriptions and forecasts of their interconnection and traffic requirements in sufficient detail necessary to establish the interconnections required to assure traffic completion to and from all customers in their respective designated service areas. In order for BellSouth to provide as accurate reciprocal trunking forecasts as possible to AT&T, AT&T must timely inform BellSouth of any known or anticipated events that may affect BellSouth reciprocal trunking requirements. If AT&T refuses to provide such information, BellSouth shall provide reciprocal trunking forecasts based only on existing trunk group growth and BellSouth's annual estimated percentage of BellSouth subscriber line growth.

4.13.1 Both Parties shall meet every six months or at otherwise mutually agreeable intervals for the purpose of exchanging non-binding forecast of its traffic and volume requirements for the interconnection and network elements provided under this Agreement, in the form and in such detail as agreed by the Parties. The Parties agree that each forecast provided under this section shall be deemed "Confidential Information" as set forth in Section 18 of the General Terms and Conditions of this Agreement, incorporated herein by this reference.

4.13.2 The trunk forecast should include trunk requirements for all of the interconnection trunk groups for the current year plus the next two future years. The forecast meeting between the two companies may be a face-to-face meeting, video conference or audio conference. It may be held regionally or geographically. Ideally, these forecast meetings should be held at least semi-annually, or more often if the forecast is no longer usable. Updates to a forecast or portions thereof should be made whenever the Party providing the forecast deems that the latest trunk requirements exceed the original quantities by 48 trunks or 10%, whichever is greater. Either Party should notify the other Party if they have measurements indicating that a trunk group is exceeding its designed call carrying capacity and is impacting other trunk groups in the network. Also, either Party should notify the other Party if they know of situations in which the traffic load is expected to increase significantly and thus affect the interconnection trunk requirements as well as the trunk requirements within the other Party's network. The Parties agree that the forecast information provided under this section shall be deemed "Confidential Information" as set forth in Section 18 of the General Terms and Conditions of this Agreement, incorporated herein by this reference. Each Party shall provide a specified point of contact for planning, forecasting and trunk servicing purposes.

4.13.3 For a non-binding trunk forecast, agreement between the two Parties on the trunk quantities and the timeframe of those trunks does not

at one time may not be classified as a major project without the consent of the submitting Party. Each Party will identify a single point of contact that will be responsible for overall coordination and management of a major project through an agreed completion point.

4.13.7 As provided herein, AT&T and BellSouth agree to exchange escalation lists which reflect contact personnel including vice president level officers. These lists shall include name, department, title, phone number, and fax number for each person. AT&T and BellSouth agree to exchange an up-to-date list promptly following changes in personnel or information.

4.14 Interference or Impairment

4.14.1 Within three (3) business days of receipt of notification of blocking of traffic originated within the other Party's network, the Parties shall determine and begin work to implement reasonable corrective measures in a manner consistent with industry practices.

4.15 Local Dialing Parity

4.15.1 BellSouth and AT&T shall provide local and toll dialing parity to each other with no unreasonable dialing delays. Dialing parity shall be provided for all originating telecommunications services that require dialing to route a call. BellSouth and AT&T shall permit similarly situated telephone exchange service end users to dial the same number of digits to make a local telephone call notwithstanding the identity of the end user's or the called party's telecommunications service provider.

5. NETWORK MAINTENANCE

5.1 Outage Repair Standard

5.1.1 In the event of an outage or trouble in any arrangement, facility, or service being provided by BellSouth hereunder, BellSouth will follow procedures for isolating and clearing the outage or trouble that are no less favorable than those that apply to comparable arrangements, facilities, or services being provided by BellSouth to itself, Affiliate or any other carrier whose network is connected to that of BellSouth.

[BellSouth shall provide AT&T at least sixty (60) days' advance notice of any scheduled maintenance activity which may impact AT&T's end users. Scheduled maintenance shall include, without limitation, such activities as, switch software retrofits, power tests, major equipment replacements and cable rolls. Plans for

scheduled maintenance shall include, at a minimum, the following information: location and type of facilities, specific work to be performed, date and time work is scheduled to commence, work schedule to be followed, date and time work is scheduled to be completed, estimated number of work-hours for completion.]
[BST proposed the following alternative language on 6/6/01:

Both Parties will work cooperatively with each other to install and maintain the most effective and reliable interconnected telecommunications networks, including but not limited to, the exchange of toll-free maintenance contact numbers and escalation procedures. Both Parties agree to provide public notice of changes in the information necessary for the transmission and routing of services using its local exchange facilities or networks, as well as of any other changes that would affect the interoperability of those facilities and networks pursuant to 47 C.F.R §§51.325 – 51.335.]

AT&T proposed alternative language to BST on 6/29/01 See attached

5.3 Interconnection Compensation

5.3.1 Compensation for Local Traffic

5.3.1.1 [redacted] when an AT&T end user originates traffic and AT&T sends it to BellSouth for termination, AT&T will determine whether the traffic is local or intraLATA toll. When a BellSouth end user originates traffic and BellSouth sends it to AT&T for termination, BellSouth will determine whether the traffic is local or intraLATA toll. Each Party will provide the other with information that will allow it to distinguish local from intraLATA toll traffic. At a minimum, each Party shall utilize NXX's in such a way that the other Party shall be able to distinguish local from intraLATA toll traffic.

DISAGREE

AT&T PROPOSAL: As clarification of this definition and for reciprocal compensation, Local Traffic does include traffic that

~~**AT&T PROPOSAL: Neither Party shall represent access services traffic (e.g., Internet Protocol Telephony, FGA, FGB, etc.) as Local Traffic for purposes of payment of reciprocal compensation. "Internet Protocol Telephony" is defined as real-time voice conversations over the Internet by converting voices into data which is compressed and split into packets, which are sent over the Internet like any other packets and reassembled as audio output at the receiving end.**~~

[redacted]

[redacted]

[redacted] **Switched Access Traffic**. Switched Access Traffic is defined as telephone calls requiring local transmission or switching services for the purpose of the origination or termination of Telephone Toll Service. Switched Access Traffic includes, but is not limited to, the following types of traffic: Feature Group A, Feature Group B, Feature Group C, Feature Group D, toll free access (e.g., 800/877/888), 900 access, and their successors. The Parties have been unable to agree as to whether Voice over Internet Protocol (VOIP) transmissions which cross local calling area boundaries constitute Switched Access Traffic. Notwithstanding the foregoing, and without waiving any rights with respect to either Party's position as to the jurisdictional nature of VOIP, the Parties agree to abide by any effective and applicable FCC rules and orders regarding the nature of such traffic and the compensation payable by the Parties for such traffic, if any; provided however, that any VOIP transmission which originates in one local calling area and terminates in another local calling area (i.e., the end-to-end points of the call), shall not be compensated as Local Traffic.

[redacted]

will be required to provide a projected Percentage Interstate Usage ("PIU") to BellSouth. All jurisdictional report requirements, rules and regulations for Interexchange Carriers specified in BellSouth's Intrastate Access Services Tariff will apply to AT&T. After interstate and intrastate traffic percentages have been determined by use of PIU procedures, the PLU factor will be used for application and billing of local interconnection. Notwithstanding the foregoing, where the terminating company has message recording technology that identifies the traffic terminated, such information, in lieu of the PLU factor, shall at the company's option be utilized to determine the appropriate reciprocal compensation to be paid.

5.3.6 Audits. On thirty (30) days' written notice, each Party must provide the other the ability and opportunity to conduct an annual audit of the traffic reported. BellSouth and AT&T shall retain records of call detail for a minimum of nine months from which a PLU and/or PIU can be ascertained. The audit shall be accomplished during normal business hours at an office designated by the Party being audited. Audit requests shall not be submitted more frequently than one (1) time per calendar year. Audits shall be performed by a mutually acceptable independent auditor paid for by the Party requesting the audit. The PLU and/or PIU shall be adjusted based upon the audit results and shall apply to the usage for the quarter the audit was completed, to the usage for the quarter prior to the completion of the audit, and to the usage for the two quarters following the completion of the audit. If, as a result of an audit, either Party is found to have overstated the PLU and/or PIU by twenty percentage points (20%) or more, that Party shall reimburse the auditing Party for the cost of the audit.

5.4 Compensation for IntraLATA Toll Traffic

5.4.1 IntraLATA Toll Traffic. IntraLATA Toll Traffic is defined as any telephone call that originates and terminates in the same LATA and is billed by the originating Party as a toll call.

5.4.2 Compensation for IntraLATA Toll Traffic. For terminating its IntraLATA Toll Traffic on the other Party's network, the originating Party will pay the terminating Party's intrastate or interstate terminating switched access tariff rates as set forth in the effective intrastate or interstate access services tariff, whichever is appropriate. The appropriate charges will be determined by the routing of the call. If BellSouth or AT&T is the other Party's end user's presubscribed interexchange carrier or if an end user uses BellSouth or AT&T as an interexchange carrier on a 101XXXX basis, BellSouth or AT&T will charge the other Party the appropriate tariff charges for originating switched access services.

ATTACHMENT 3

LOCAL INTERCONNECTION

DISAGREE:

5.3.1.1
5.3.1.7

OPEN-AT&T

1.2
1.5
1.7
1.8
1.9 – 1.11
2.2.2
2.7
3.2 – 3.5
3.6.7
3.18.1.1
4.13.5.3
5.2
5.3.1.1
5.3.3
5.3.3.1
6

OPEN-BST

1.2
1.4.3
1.4.4
1.5
1.7
1.8
1.9 – 1.11
2.2.2
3.2 – 3.5
3.6.6
3.6.7
3.7
3.8
3.9
4.14.1
5.3.2

EXHIBIT
Stevens 3
1-20-03 DX
Alexander Gallo & Associates, Inc.

~~4/18/00~~
5/22/01

TABLE OF CONTENTS

1. NETWORK INTERCONNECTION 33
2. METHODS OF INTERCONNECTION 55
3. INTERCONNECTION TRUNKING AND ROUTING 88
4. NETWORK DESIGN AND MANAGEMENT FOR INTERCONNECTIONERROR! BOOKMAR
5. NETWORK MAINTENANCE 1919

EXHIBIT A

EXHIBIT B

EXHIBIT C

EXHIBIT D

EXHIBIT E

EXHIBIT F

LOCAL INTERCONNECTION

OK **1. NETWORK INTERCONNECTION**

OK 1.1 The Parties shall provide interconnection with each other's network for the transmission and routing of telephone exchange service (local) and exchange access (intraLATA toll and switched access).

[redacted] BellSouth shall provide AT&T interconnection with BellSouth's network at any technically feasible point within BellSouth's network. including... (1.1. in MIA)

not in 4/28

[redacted] AT&T shall provide interconnection to BellSouth at any mutually agreed upon point. (MIA 1.3)

[redacted] **[AT&T must establish, at a minimum, a single ~~Point of Presence, Point of Interface, and~~ Point of Interconnection with BellSouth within the LATA for the delivery of AT&T's originated local, intraLATA toll terminated to BellSouth and transit traffic terminated to other than BellSouth.][OPEN-BST/AT&T]** If AT&T chooses to interconnect at a single Point of Interconnection within a LATA, the interconnection must be at a BellSouth access or local tandem. Furthermore, AT&T must establish Points of Interconnection at all BellSouth access and local tandems where AT&T NXXs are "homed." A "Homing" arrangement is defined by a "Final" Trunk Group between the BellSouth access or local tandem and AT&T End Office switch. A "Final" Trunk Group is the last choice telecommunications path between the access or local tandem and End Office switch. It is AT&T's responsibility to enter its own NPA/NXX access and/or local tandem "homing" arrangements into the national Local Exchange Routing Guide ("LERG"). In order for AT&T to home its NPA/NXX(s) on a BellSouth access or local tandem, AT&T's NPA/NXX(s) must be assigned to an exchange rate center area served by that BellSouth access or local tandem and as specified by BellSouth.

OK 1.4 BST prop 4/28 AT&T tirewrite

~~interconnection trunk group instead of POP~~

OK 1.3 A Point of Presence is the physical location (a structure where the environmental, power, air conditioning, etc. specifications for a Party's terminating equipment can be met) at which a Party establishes itself for obtaining access to the other Party's network. The Point of Presence is the physical location within which the Point(s) of Interface occur.

1.5 4/28

OK 1.4 A Point of Interface is the physical telecommunications interface between BellSouth and AT&T's interconnection facilities. It establishes the technical interface and point of operational responsibility. The primary purpose of the Point of Interface is to serve

1.6 4/28

as the terminus for each Party's interconnection facilities. The Point of Interface has the following main characteristics:

OK 1.4.1 1.6.1 4/28 It is a cross-connect point to allow connection, disconnection, transfer or restoration of service.

OK 1.4.2 1.6.2 4/28 It is a point where BellSouth and AT&T can verify and maintain specific performance objectives.

OK 1.4.3 [It is specified according to the interfaces offered in this Attachment 3.] ~~[OPEN-BST]~~

OK ~~1.4.4~~ ~~[The Parties provide their own equipment to interface with the equipment on the customer premises.] [OPEN-BST]~~

[redacted] 1.7 4/28 stl open

[The Point of Interconnection is the point at which the originating Party delivers its originated traffic to the terminating Party's first point of switching on the terminating Party's common (shared) network for call transport and termination. Points of Interconnection are available at either access tandems, local tandems, End Offices, or any other technically feasible point, as described in this Agreement. AT&T's requested Point of Interconnection will also be used for the receipt and delivery of transit traffic at BellSouth access and local tandems. Points of Interconnection established at the BellSouth local tandem apply only to AT&T-originated local and local originating and terminating transit traffic.] [OPEN-BST/AT&T]

does the earlier clarifications eliminate the need for this longer?

OK 1.6 1.8 4/28 The Parties will work cooperatively to establish the most efficient trunking network in accordance with the provisions set forth in this Attachment 3 and accepted industry practices.

[redacted] are we OK with new 4/28 1.9

[Each party will be responsible for engineering its network (i.e., the underlying facilities on which trunks are provisioned) and providing or causing to be provided any necessary equipment on its side of the Point of Interface.] AT&T, at its option, shall establish Points of Presence and Points of Interface for the delivery of its originated local and intraLATA toll traffic to BellSouth. The Point of Interface may not necessarily be established at the Point of Interconnection.] ~~[OPEN-BST/AT&T]~~

[redacted] 1.10 4/28 Disposition??

[BellSouth shall designate the Points of Presence and Points of Interface for the delivery of its originated local and intraLATA toll traffic to AT&T for call transport and termination by AT&T.] [OPEN-BST/AT&T]

delete

[redacted] 1.11 4/28 **[For the purposes of this Attachment 3, Local Channel is defined as a switch transport facility between a Party's Point of Presence and its designated serving wire center.[open AT&T]**

[redacted] 1.12 4/28 For the purposes of this Attachment 3, Serving Wire Center is defined as the wire center owned by one Party from which the other Party would normally obtain dial tone for its Point of Presence.

[redacted] 1.13 4/28 **For the purposes of this Attachment 3, Dedicated Transport is defined as a switch transport facility between a Party's designated serving wire center and the first point of switching on the other Party's common (shared) network.] [OPEN-~~BST/~~AT&T]**

OK **2. METHODS OF INTERCONNECTION**

OK 2.1 The Parties shall interconnect their networks utilizing one of the following methods in accordance with the provisions set forth in this Attachment 3. at our discretion

OK 2.2 2.1.1 4/28 Interconnection by one Party at the premises of the other Party.

OK 2.2.1 2.1.2 4/28 BellSouth shall provide collocation to AT&T pursuant to the terms set forth in Attachment 4 of this Agreement, incorporated herein by this reference. AT&T may, at its option, purchase such collocation at the rates, terms, and conditions set forth in Attachment 4 of this Agreement, incorporated herein by this reference.

only traffic covered by this agreement

[redacted] 2.1.3 4/28 **[AT&T, at its sole discretion, may permit BellSouth to utilize space and power in AT&T facilities specified by AT&T solely for the purpose of terminating BellSouth's local traffic. BellSouth may request installation of both cable and equipment, or cable only. The pricing, terms and conditions of such arrangement shall be pursuant to Exhibit [redacted] of this Attachment 3, incorporated herein by this reference.] [OPEN-BST/AT&T]**

OK 2.3 2.1.4 4/28 Leased Facilities – where the Party requesting interconnection utilizes the facilities offered by the other Party. Such leased facilities shall be provided at the rates, terms, and conditions set forth in this Attachment 3. At AT&T's request, it may lease separate facilities for the sole purpose of delivering undipped 8YY traffic from AT&T's end users to BellSouth's [redacted] ("SSP") for dipping into BellSouth's toll free database. \ Should be service switching point

OK 2.4 2.1.5 4/28 Third Party Facilities – where the Party requesting interconnection utilizes the facilities provided by a source other than the Parties to this Agreement. The Party utilizing this option shall comply with industry standards to maintain network integrity and will be solely responsible

for any charges or fees assessed by the third party for use of its facilities.

OK 2.5 4/28 2.1.6

Commercial Intra-building Interconnection – where both Parties have constructed broadband facilities into a commercial building (i.e., a building that is not a telephone central office) and agree to establish a Point of Interface at such location utilizing intra-building cable.

OK 2.6 4/28 2.1.7

"Fiber Meet" is an interconnection arrangement whereby the Parties physically interconnect their networks via an optical fiber interface (as opposed to an electrical interface), at which one Party's facilities, provisioning, and maintenance responsibility begins and the other Party's responsibility ends (i.e., Point of Interface). A Fiber Meet shall be an arrangement as set forth in Section 2.9 of this Attachment 3.

OK 2.7 4/28 2.1.8

Any other method determined to be technically feasible and requested by AT&T shall be done pursuant to the process defined in Attachment 10 of this Agreement, incorporated herein by this reference. Any other method determined to be technically feasible and requested by BellSouth and agreed to by AT&T shall be done. ~~pursuant to~~ [redacted] ~~[OPEN-AT&T]~~

Trunks

Trunking Arrangement [redacted] 4/28 2.2 on AT&T

Local Tandem Interconnection. This interconnection arrangement allows AT&T to establish a Point of Interconnection at BellSouth local tandems for: (1) the delivery of AT&T-originated local traffic transported and terminated by BellSouth to BellSouth end offices within the local calling area as defined in BellSouth's General Subscriber Services Tariff, Section A3 served by those BellSouth local tandems; and (2) for local transit traffic transported by BellSouth for third party network providers who have also established Points of Interconnection at those BellSouth local tandems.

[redacted]

When a specified local calling area is served by more than one BellSouth local tandem, AT&T must designate a "home" local tandem for each of its assigned NPA/NXXs and establish trunk connections to such local tandems. Additionally, AT&T may choose to establish a Point of Interconnection at the BellSouth local tandems where it has no codes homing but is not required to do so. AT&T may deliver local traffic to a "home" BellSouth local tandem that is destined for other BellSouth or third party network provider end offices subtending other BellSouth local tandems in the same local calling area where AT&T does not choose to establish a Point of Interconnection. It is AT&T's responsibility to enter its own NPA/NXX local tandem homing arrangements into the LERG either directly or via a vendor in order for other third party network providers to determine appropriate traffic routing to AT&T's codes. Likewise, AT&T shall obtain its routing information from the LERG.

4/28 2.2.1 on AT&T

OK

3 MTA 4/28 OK

[redacted] Not withstanding establishing Points of Interconnection to BellSouth's local tandems, AT&T must also establish Points of Interconnection to BellSouth access tandems within the LATA on which AT&T has NPA/NXX's homed for the delivery of Interexchange Carrier Switched Access ("SWA") and toll traffic, and traffic to Type 2A CMRS connections located at the access tandems. BellSouth cannot switch SWA traffic through more than one BellSouth access tandem. SWA, Type 2A CMRS or toll traffic routed to the local tandem in error will not be backhauled to the BellSouth access tandem for completion. (Type 2A CMRS interconnection is defined in BellSouth's General Subscriber Services Tariff, Section A35.)

4/28 2.2.2 OK with saving that TRUNKS INTO ??

What does this mean

[redacted] Bell-South shall pass transit traffic to other third party network providers subtending these local tandems. However, AT&T shall be responsible directly to that third party for all reciprocal compensation obligations.'s provisioning of local tandem interconnection assumes that AT&T has the necessary local interconnection arrangement with the other third party network providers subtending those local tandems as required by the Act.

2.2.3 4/28 are we OK

OK **2.9** 2.3 4/28

Fiber Meet

[redacted] If AT&T elects to establish a Point of Interconnection with BellSouth pursuant to a Fiber Meet, AT&T and BellSouth shall jointly engineer and operate a Synchronous Optical Network ("SONET") transmission system by which they shall interconnect their transmission and routing of local traffic via a Local Channel facility at either the DS0, DS1, or DS3 level and shall be ordered via an Access Services Request ("ASR") in the initial phase of this offering. The Parties shall work jointly to determine the specific transmission system. The parties will work cooperatively to establish joint access to transmission overhead signals and commands for such facilities and software. However, AT&T's SONET transmission must be compatible with BellSouth's equipment in the serving wire center. The Parties will work cooperatively in the selection of compatible transmission equipment and software. Fiber Meet will be used for the provision of two-way trunking unless otherwise agreed to by the Parties. ~~The system is bi-directional~~

2.3.1 4/28

1.6.1 MIA, Part 1, First sentence

OK 2.9.2 BellSouth shall, wholly at its own expense, procure, install and maintain the agreed upon SONET equipment in the BellSouth Serving Wire Center ("BSWC").

2.3.2 4/28

OK 2.9.3 AT&T shall, wholly at its own expense, procure, install and maintain the agreed upon SONET equipment in the AT&T Serving Wire Center ("ASWC").

2.3.3 4/28

OK 2.9.4 2.3.4 4/28

The parties shall mutually agree upon a Point of Interface outside of the BSWC as a Fiber Meet point and shall make all necessary preparations to receive and to allow and enable delivery of fiber optic facilities into the Point of Interface with sufficient spare length to reach the Point of Interface. A Common Language Location Identification ("CLLI") code will be established for each Point of Interface. The code established must be a building type code. All orders shall originate from the Point of Interface (i.e., Point of Interface to AT&T, Point of Interface to BellSouth).

OK 2.9.5 2.3.5 4/28

The Parties shall deliver and maintain their own strands wholly at their own expense. Upon verbal request by either Party, the other Party shall allow access to the Fiber Meet entry point for maintenance purposes as promptly as possible.

OK 2.9.6 2.3.6 4/28

The Parties shall jointly coordinate and undertake maintenance of the SONET transmission system. Each Party shall be responsible for maintaining the components of their own SONET transmission system.

OK 2.9.7 2.3.7 4/28

Each Party will be responsible for (i) providing its own transport facilities to the Fiber Meet, and (ii) the cost to build-out its facilities to such Fiber Meet.

OK 2.9.8 2.3.8 4/28

Neither Party shall charge the other for its portion of the Fiber Meet facility between the ASWC and the BSWC used exclusively for the other Party's local traffic (i.e., the Local Channel). The Parties do not intend to utilize this arrangement for transit traffic.

3.1 thru 3.2 in 4/28 version with 25% Dom 25% Int

OK 3. **INTERCONNECTION TRUNKING AND ROUTING** → MIA, Part II C

OK 3.1 3.2 4/28

The Parties will convert all existing interconnection arrangements and trunks to the interconnection arrangements described in this Attachment in accordance with the following:

OK 3.2 3.2.1 4/28

[Within 45 days of ~~the Effective Date~~either Party's written request, the Parties will mutually develop an operations plan based on sound engineering and operations principles, which will specify the guidelines to convert from the existing interconnection arrangements to the interconnection arrangements described in this Attachment 3. Such guidelines will conform to standard industry practices adopted by and contained in documents published by Industry Forums, including but not limited to, the Alliance for Telecommunications Industry Solutions ("ATIS") and the Ordering and Billing Forum ("OBF").

OK 3.3 3.2.2 4/28

Each Party shall bear its own costs to convert from the existing interconnection arrangements to the interconnection arrangements described in this Attachment.

OK 3.4 3.2.3 4/28 Unless otherwise mutually agreed, the Parties will complete the conversion within one [1] year of the ~~Effective Date~~Requesting Party's written request ~~of the Agreement~~.

OK 3.5 3.2.4 4/28 If, following one [1] year after the ~~Effective Date of the Agreement~~Requesting Parth's written request, there exists any interconnection trunks which have not been converted to the interconnection arrangements described in this Attachment 3, then either Party may invoke the dispute resolution proceeding, pursuant to Section 16 of the General Terms and Conditions of this Agreement, incorporated herein by this reference. ~~[OPEN-BST/AT&T]~~

OK 3.6 3.3 4/28 The Parties will use the following interconnection standards:

OK 3.6.1 3.3.1 4/28 The Parties agree to establish Binary 8 Zero Sum Extended Superframe line protocol, where technically feasible.

OK 3.6.2 3.3.2 4/28 In those cases where either Party's equipment will not support 64K Clear Channel Capability ("CCC"), the Parties agree to establish AMI line coding. Any AMI line coding will be Superframe formatted. DS3 facilities will be provisioned with C-bit parity.

OK 3.6.3 3.3.3 4/28 Where additional equipment is required, such equipment shall be obtained, engineered, and installed to support 64K CCC trunks.

OK 3.6.4 3.3.4 4/28 All interconnection facilities between the Parties will be sized according to mutual forecasts developed per the requirements of Section 4.14 of this Attachment 3 and sound engineering practices.

OK 3.6.5 3.3.5 4/28 Interconnection will be provided utilizing either a DS1 or DS3 interface or, with the mutual agreement of the Parties, another technically feasible interface (e.g., STS-1).

[redacted] 3.3.6 4/28 BellSouth and AT&T shall establish interconnecting trunk groups and trunking configurations between networks including the establishment of one-way or two-way trunks in accordance with **[Exhibit [redacted] of this Attachment 3, attached hereto and incorporated herein by this reference.] [OPEN-BST to provide list]** 200 long here - mk charges to 1 & 2 way slides

OK 3.6.7 3.3.7 4/28 [All terms and conditions, as well as charges, both non-recurring and recurring, associated with interconnecting trunk groups between BellSouth and AT&T not addressed in Exhibit A shall be as set forth in the appropriate Party's intrastate or interstate tariff for switched access services. For two-way trunking that carries the Parties' local and intraLATA toll traffic, excluding transit traffic, the Parties shall be compensated for the nonrecurring and recurring charges for trunks and DS1 facilities at 50% of the applicable contractual or tariff rates for the services provided by each Party. AT&T shall be responsible for

ordering and paying for any two-way trunks carrying transit traffic.] ~~[OPEN-BST/AT&T]~~

OK ~~3.7[The Parties will work cooperatively to assure that reasonable diversity is achieved among the trunk groups between each Party's switches within each LATA.] [OPEN-BST]~~

OK [redacted] **All originating toll free service calls for which the end office Party performs the SSP function, if delivered to the tandem Party, shall be delivered by the end office Party using GR-394 CORE format for IXC bound calls, or using GR-317-CORE format for LEC bound calls. [OPEN-BST]**

3.4 4/28

OK [redacted] **[Originating Feature Group B calls delivered to either Party's tandem shall use GR-317-CORE signaling format unless the associated FGB carrier employs GR-394-CORE signaling for its FGB traffic at the serving access tandem.] [OPEN-BST]**

3.5 4/28

[redacted] The Parties shall deliver over any trunk groups groomed for a specific access tandem only traffic destined for those publicly-dialable NPA NXX codes served by: (1) end offices that directly subtend the access tandem; and (2) those providers (including, but not limited to CMRS providers, other independent LECs, and CLECs) that directly connect to the access tandem. Parties agree to route traffic pursuant to the LERG. 3.12 below.

OK 3.6 4/28

[redacted] For BellSouth end offices that do not normally subtend tandem for which calls are routed to that end office on an alternate routing basis, BellSouth will provide AT&T its alternative routing (scheme) arrangements. Where BellSouth utilizes alternative arrangements, it shall deliver any traffic through that alternative routing.

OK 3.7 4/28

OK ~~3.12~~3.11 The Parties shall deliver over any trunk groups groomed for a specific end office only traffic destined for those publicly-dialable NPA NXX codes served by that end office, unless otherwise agreed to by the Parties.

3.8 4/28

OK ~~3.13~~3.12 The source for the routing information for all traffic shall be the LERG unless otherwise agreed to between the Parties.

3.9 4/28

OK ~~3.14~~3.13 Where either Party delivers over the local traffic trunk groups miscellaneous calls (e.g., time, weather, 976) destined for the other Party, it shall deliver such traffic in accordance with the serving arrangements defined in the LERG.

3.10 4/28

Say same thing

OK ~~3.15~~3.14 The Parties will cooperate to establish separate, choke trunk groups for the completion of calls to customers such as radio contest lines. Notwithstanding the foregoing, the Parties agree that where the

3.11 4/28

Parties' switch has the capability to perform call gapping and other protective network traffic management controls, separate trunk groups shall not be required to carry such traffic.

OK ~~3.16~~3.15 N11 code traffic shall be routed between the Parties' networks pursuant to accepted industry practice (e.g., over local traffic trunks or over separate trunk groups).
3.12 4/28

OK ~~3.17~~3.16 Each Party shall establish procedures whereby its operator bureau will coordinate with the operator bureau of the other Party in order to provide Busy Line Verification/Busy Line Verification Interrupt ("BLV/BLVI") services on calls between their respective line side end users for numbers that are not ported.
3.13 4/28

OK ~~3.18~~3.17 A blocking standard of one-half of one percent (.005) shall be maintained during the average busy hour for final trunk groups carrying jointly provided exchange access traffic between an end office and an access tandem. All other final trunk groups are to be engineered with a blocking standard of one percent (.01). High usage trunk groups shall be sized to an economic CCS parameter mutually agreed to by both Parties.
3.14.1 4/28

[redacted] **BellSouth agrees to provide upon request of AT&T, pursuant to Section [redacted] of the General Terms and Conditions of this Agreement, traffic usage data (including, but not limited to, usage, peg and overflow counts) for each AT&T NXX subtending the BellSouth tandem to determine which AT&T traffic by NXX is being blocked. [OPEN-AT&T]**
3.14.1 4/28 ADOPTED

OK ~~3.18.1.2~~3.17.1.2 Pursuant to Attachment 9, incorporated herein by this reference, BellSouth shall report to AT&T information regarding blocking of interconnection traffic.
3.14.2 4/28

OK ~~3.19~~3.18 The Parties agree to jointly manage the capacity of interconnection trunk groups to encourage the economic deployment of increasingly robust and diverse interconnection between their networks.
3.15 4/28

[redacted] 3.23 thru 3.29 open AT&T

OK 4. **NETWORK DESIGN AND MANAGEMENT FOR INTERCONNECTION**

4.1 OK Network Management and Changes. Both Parties will work cooperatively with each other to install and maintain the most effective and reliable interconnected telecommunications networks, including but not limited to, the exchange of toll-free maintenance contact numbers and escalation procedures. Both Parties agree to provide

We're OK if intent 07 BST was to delete 1st line. Leave at our option

public notice of changes in the information necessary for the transmission and routing of services using its local exchange facilities or networks, as well as of any other changes that would affect the interoperability of those facilities and networks.

4.2 OK Interconnection Technical Standards. The interconnection of all networks will be based upon accepted industry/national guidelines for transmission standards and traffic blocking criteria. Interconnecting facilities shall conform, at a minimum, to the technical specifications set forth in the applicable industry standard technical references. Signal transfer point, Signaling System 7 ("SS7") connectivity is required at each interconnection point. BellSouth will provide out-of-band signaling using Common Channel Signaling Access Capability where technically and economically feasible, in accordance with the technical specifications set forth in the applicable industry standard technical references. Facilities of each Party shall provide the necessary on-hook, off-hook answer and disconnect supervision and shall hand off calling number ID (Calling Party Number) when technically feasible.

4.3 OK Quality of Interconnection. The local interconnection for the transmission and routing of telephone exchange service and exchange access that each Party provides to each other will be at least equal in quality to what it provides to itself and any subsidiary or affiliate, where technically feasible, or to any other Party to which each Party provides local interconnection.

4.4 OK Common Channel Signaling. Both Parties will provide LEC-to-LEC Common Channel Signaling ("CCS") to each other, where available, in conjunction with all traffic in order to enable full interoperability of CLASS features and functions except for call return. All CCS signaling parameters will be provided, including automatic number identification ("ANI"), originating line information ("OLI") calling company category, charge number, etc. All privacy indicators will be honored, and each Party will cooperate with each other on the exchange of Transactional Capabilities Application Part ("TCAP") messages to facilitate full interoperability of CCS-based features between the respective networks. The Parties will provide all line information signaling parameters including, but not limited to, Calling Party Number, Charge Number (if it is different from calling party number), and originating line information ("OLI"). For terminating FGD, either Party will pass any CPN it receives from other carriers. All privacy indicators will be honored. Where available, network signaling information such as Transit Network Selection ("TNS") parameter (SS7 environment) will be provided by the end office Party wherever such information is needed for call routing or billing. Where TNS information has not been provided by the end office Party, the tandem Party will route originating

exchange access traffic to the IXC using available translations. The Parties will follow all industry Ordering and Billing Forum ("OBF") adopted guidelines pertaining to TNS codes.

OK 4.4.1 BellSouth's Common Channel Signaling Access Service ("CCSAS") allows interconnected carriers to exchange signaling information over a communications path that is separate from the message path.

OK 4.4.2 The transport portion of CCSAS, commonly referred to as a signaling link, is provided via dedicated 56 kbps out of band signaling connections between the AT&T signaling point of interconnection and BellSouth's signaling point of interconnection ("SPOI").

OK 4.4.3 The network termination point where this interconnection takes place is called the Signaling Transfer Point ("STP") port termination.

OK 4.4.4 Charges for signaling links and the STP port termination can be found in Attachment 2 of this Agreement, incorporated herein by this reference.

OK 4.4.5 Each CCSAS signaling connection provides for two-way digital transmission at speeds in multiples of 56 kbps. The connection to BellSouth's STP pair can be made from either AT&T's signaling point ("SP"), which requires a minimum of two links, or from AT&T's STP pair, which requires a minimum of four links.

OK 4.5 4.4.6 4/28 SS7 Interconnection will take place at STP locations that are mutually agreed to by the Parties.

OK 4.6 4.4.7 4/28 Where CCS is not available, in-band multi-frequency signaling will be provided. In such an arrangement, each Party will outpulse the full ten-digit telephone number of the called party to the other Party with appropriate call set-up and Automatic Number Identification ("ANI") where available, at parity.

OK 4.7 4.4.8 4/28 The Parties will provide CCS to one another, where and as available, in conjunction with access to call related databases and Service Control Points ("SCP"), including toll free databases, Line Information Database ("LIDB"), Calling Name ("CNAM"), and any other necessary databases.

OK 4.8 4.4.9 4/28 When the Parties establish new links , each Party shall provide its own STP port termination(s) and charge the other Party for the signaling links as follows

OK 4.8.1 4.4.9.1 4/28 Where the SPOI for the signaling link is at a Fiber Meet, there shall be no compensation between the Parties for the signaling link facilities used.

[redacted] Where the SPOI for the signaling link facilities is located at the BellSouth Serving Wire Center where the signaling link facilities terminates and AT&T has furnished the interconnection facility, BellSouth will pay a monthly charge equal to one half of the AT&T-provided facility charge according to BellSouth's unbundled rate element for the facility used. Rates for said interconnection facilities shall be as set forth in Exhi[redacted] Attachment 2, incorporated herein by this reference.

4.4.9.2 4/28

[redacted] Where the SPOI for the signaling link facilities is located at the AT&T Serving Wire Center facility where the signaling link facilities terminate and BellSouth has furnished the interconnection facility, AT&T will pay a monthly charge equal to one half of the BellSouth-provided facility charge according to BellSouth's unbundled rate element for the facility used. Rates for said interconnection facilities shall be as set forth in Exh[redacted] in Attachment 2, incorporated herein by this reference.

4.4.9.3 4/28

OK 4.8.4 Each party is responsible for all facility maintenance and provisioning on its side of the SPOI.

4.4.9.4 4/28

OK 4.9 Implementation of new interconnection arrangements (as opposed to augmentation of existing arrangements), including testing of SS7 interconnection, shall be pursuant to the technical specifications set forth in the applicable industry standard technical references. Each Party will be expected to provide sufficient cooperative testing resources to ensure proper provisioning, including the ability to confirm that AT&T LERG-assigned NPA NXX codes have been opened, translated and routed accurately in all appropriate BellSouth switches. A mutually agreed test calling plan shall be conducted to ensure successful completion of originating and terminating calls.

4.4.10 4/28

OK 4.10 <u>Message Screening</u>

4.5 4/28

OK 4.10.1 BellSouth shall set message screening parameters so as to accept messages from AT&T local or tandem switching systems destined to any signaling point in the BellSouth SS7 network or any network interconnected to the BellSouth SS7 network with which the AT&T switching system has a legitimate signaling relationship.

4.5.1 4/28

OK 4.10.2 BellSouth shall set message screening parameters so as to accept messages destined to/from an AT&T local or tandem switching system or to/from an AT&T Service Control Point ("SCP") from any signaling point or network interconnected to the BellSouth SS7 network with which the AT&T switching system has a legitimate signaling relationship.

4.5.2 4/28

OK 4.11 <u>STP Requirements</u>

4.6 4/28

5/22/01

OK 4.11.1 4.6.1 4/28 BellSouth shall provide message transfer part and Signaling Connection Control Point ("SCCP") protocol interfaces in accordance with the technical specifications set forth in the applicable industry standard technical references.

OK 4.12 4.7 4/28 <u>SS7 Network Interconnection</u>

OK 4.12.1 4.7.1 4/28 SS7 Network Interconnection is the interconnection of AT&T STPs and AT&T local or tandem switching systems with the BellSouth STPs. This interconnection provides connectivity that enables the exchange of SS7 messages among BellSouth switching systems and databases, AT&T local or tandem switching systems and other third-party switching systems directly connected to the BellSouth SS7 network.

OK 4.12.2 4.7.2 4/28 SS7 Network Interconnection shall provide connectivity to all components of the BellSouth SS7 network. These include:

OK 4.12.2.1 4.7.2.1 4/28 BellSouth local or tandem switching systems;

OK 4.12.2.2 4.7.2.2. 4/28 BellSouth databases; and

OK 4.12.2.3 4/28 Other third-party local or tandem switching systems.

OK 4.12.3 4/28 The connectivity provided by SS7 Network Interconnection shall fully support the functions of BellSouth switching systems and databases and AT&T or other third-party switching systems with [note could be A or D/B link] direct access to the BellSouth SS7 network.

OK 4.12.4 4/28 SS7 Network Interconnection shall provide transport for certain types of TCAP messages. If traffic is routed based on dialed or translated digits between an AT&T local switching system and a BellSouth or other third-party local switching system, either directly or via a BellSouth tandem switching system, then it is a requirement that the BellSouth SS7 network convey via SS7 Network Interconnection the TCAP messages that are necessary to provide Call Management services (Automatic Callback, Automatic Recall, and Screening List Editing) between the AT&T local STPs and the BellSouth or other third-party local switch.

OK 4.12.5 4/28 When the capability to route messages based on Intermediate Signaling Network Identifier ("ISNI") is generally available on BellSouth STPs, the BellSouth SS7 Network shall also convey TCAP messages using SS7 Network Interconnection in similar circumstances where the BellSouth switch routes traffic based on a Carrier Identification Code ("CIC").

OK 4.~~12~~7.6 4/28 BellSouth shall offer the following SS7 Network Interconnection options to connect AT&T or AT&T-designated local or tandem switching systems or STPs to the BellSouth SS7 network:

OK 4.~~12~~7.6.1 4/28 A-link interface from AT&T local or tandem switching systems; and

OK 4.~~12~~7.6.2 4/28 D/B-link interface from AT&T STPs.

OK 4.~~12~~7.7 4/28 Each interface shall be provided by one or more sets (layers) of signaling links, as follows:

OK 4.~~12~~7.7.1 4/28 An A-link layer shall consist of two links.

OK 4.~~12~~7.7.2 4/28 A D/B-link layer shall consist of four links.

OK 4.~~12~~7.8 4/28 The Parties agree to implement intraoffice diversity for the signaling links so that no single failure of intraoffice facilities or equipment shall cause the failure of any two links in a layer connecting to a BellSouth STP.

OK **4.12.9** 4.7.9 4/28 <u>Signaling Call Information. BellSouth and AT&T will send and receive 10 digits for local traffic. Additionally, BellSouth and AT&T will exchange the proper call information, i.e., originated call company number and destination call company number, CIC, and OZZ, including all proper translations for routing between networks and any information necessary for billing.</u>

OK 4.~~13~~8 4/28 <u>Trunk Forecasting and Servicing Requirements</u>.

OK 4.~~13~~8.1 4/28 The Parties shall exchange technical descriptions and forecasts of their interconnection and traffic requirements in sufficient detail necessary to establish the interconnections required to assure traffic completion to and from all customers in their respective designated service areas. In order for BellSouth to provide as accurate reciprocal trunking forecasts as possible to AT&T, AT&T must timely inform BellSouth of any known or anticipated events that may affect BellSouth reciprocal trunking requirements. If AT&T refuses to provide such information, BellSouth shall provide reciprocal trunking forecasts based only on existing trunk group growth and BellSouth's annual estimated percentage of BellSouth subscriber line growth.

OK 4.~~13~~8.1 4.8.2 4/28 Both Parties shall meet every six months or at otherwise mutually agreeable intervals for the purpose of exchanging non-binding forecast of its traffic and volume requirements for the interconnection and network elements provided under this Agreement, in the form and in such detail as agreed by the Parties. The Parties agree that each forecast provided under this section shall be deemed "Confidential

Information" as set forth in Section 18 of the General Terms and Conditions of this Agreement, incorporated herein by this reference.

OK 4.13.2 4.8.3 4/28 The trunk forecast should include trunk requirements for all of the interconnecting trunk groups for the current year plus the next two future years. The forecast meeting between the two companies may be a face-to-face meeting, video conference or audio conference. It may be held regionally or geographically. Ideally, these forecast meetings should be held at least semi-annually, or more often if the forecast is no longer usable. Updates to a forecast or portions thereof should be made whenever the Party providing the forecast deems that the latest trunk requirements exceed the original quantities by 48 trunks or 10%, whichever is greater. Either Party should notify the other Party if they have measurements indicating that a trunk group is exceeding its designed call carrying capacity and is impacting other trunk groups in the network. Also, either Party should notify the other Party if they know of situations in which the traffic load is expected to increase significantly and thus affect the interconnecting trunk requirements as well as the trunk requirements within the other Party's network. The Parties agree that the forecast information provided under this section shall be deemed "Confidential Information" as set forth in Section 18 of the General Terms and Conditions of this Agreement, incorporated herein by this reference. Each Party shall provide a specified point of contact for planning, forecasting and trunk servicing purposes.

OK 4.13.3 4.8.4 4/28 For a non-binding trunk forecast, agreement between the two Parties on the trunk quantities and the timeframe of those trunks does not imply any liability for failure to perform if the trunks are not available for use at the required time.

~~4.13.4Signaling Call Information. BellSouth and AT&T will send and receive 10 digits for local traffic. Additionally, BellSouth and AT&T will exchange the proper call information, i.e., originated call company number and destination call company number, CIC, and OZZ, including all proper translations for routing between networks and any information necessary for billing.~~ OK

OK ~~4.13.5~~4.13.4 4.8.5 4/28 Both Parties will manage the capacity of their interconnection trunk groups. BellSouth will issue an ASR to AT&T to order changes BellSouth desires to the BellSouth interconnection trunk groups based on BellSouth's capacity assessment. AT&T will issue an ASR to BellSouthBellSouth to order changes AT&T desires to the AT&T interconnection trunk groups based on AT&T's capacity assessment.

OK ~~4.13.5.1~~4.13.4.1 4.8.6 4/28 Either Party may issue a Trunk Group Service Request ("TGSR") to the other Party to order changes it desires to the

interconnection trunk groups based on its capacity assessment. The Party receiving the TGSR will, within ten (10) business days, respond with an ASR or an explanation of why it believes an ASR is inappropriate.

OK ~~4.13.5.2~~4.13.4.2 The Party submitting an ASR will provide complete and accurate tie down inventory assignments in typical industry bay, panel and jack format, or in such other format as the Parties agree, on each order by use of a Design Layout Record. Additional tie down information, such as span information, may be required when applicable.

4.8.7 4/28

OK ~~4.13.5.3~~4.13.4.3 The Parties will prepare ASRs pursuant to the industry standard guidelines of the OBF. [When submitting an ASR, BellSouth will identify AT&T's end office in the SEC LOC field of the ASR form.] ~~[OPEN-AT&T]~~

4.8.8 4/28

OK ~~4.13.5.4~~4.13.4.4 The Party provisioning the ASR will assign to the requesting Party a location code expressed in CLLI code format that will appear in the Access Customer Terminal Location Field of the ASR.

4.8.9 4/28

OK ~~4.13.6~~4.13.5 The standard interval used for the provisioning of additions to local interconnection trunk groups shall be no greater than ten (10) business days, for orders of fewer than ninety-six (96) DS-0 trunks. Other orders shall be determined on an individual case basis. Where feasible, either Party will expedite installation, upon the other Party's request.

4.8.10 4/28

OK ~~4.13.7~~4.13.6 Major projects shall be limited to those projects that require the coordination and execution of multiple orders or related activities between and among BellSouth and AT&T work groups specifically relating to: (i) the initial establishment of local interconnection trunk groups; (ii) extending service into a new area; (iii) NXX code moves; (iv) facility grooming; or (v) network rearrangements. If orders that are component pieces of a major project are submitted after project implementation has been jointly planned and coordinated, they shall be submitted with a major project reference. Several orders submitted at one time may not be classified as a major project without the consent of the submitting Party. Each Party will identify a single point of contact that will be responsible for overall coordination and management of a major project through an agreed completion point.

4.8.11 4/28

OK ~~4.13.8~~4.13.7 As provided herein, AT&T and BellSouth agree to exchange escalation lists which reflect contact personnel including vice president level officers. These lists shall include name, department, title, phone number, and fax number for each person. AT&T and BellSouth agree

4.8.12 4/28

to exchange an up-to-date list promptly following changes in personnel or information.

OK 4.14.9 4/28 Interference or Impairment

OK 4.14.1 4.10 4/28 [Within three (3) business days of receipt of notification of blocking of traffic originated within the other Party's network, the Parties shall determine and begin work to implement reasonable corrective measures in a manner consistent with industry practices.] ~~[OPEN-BST]~~

OK 4.15 4.11 4/28 Local Dialing Parity

OK 4.15.1 4.11.1 4/28 BellSouth and AT&T shall provide local and toll dialing parity to each other with no unreasonable dialing delays. Dialing parity shall be provided for all originating telecommunications services that require dialing to route a call. BellSouth and AT&T shall permit similarly situated telephone exchange service end users to dial the same number of digits to make a local telephone call notwithstanding the identity of the end user's or the called party's telecommunications service provider.

OK **5. NETWORK MAINTENANCE**

OK 5.1 Outage Repair Standard

OK 5.1.1 In the event of an outage or trouble in any arrangement, facility, or service being provided by BellSouth hereunder, BellSouth will follow procedures for isolating and clearing the outage or trouble that are no less favorable than those that apply to comparable arrangements, facilities, or services being provided by BellSouth to itself, Affiliate or any other carrier whose network is connected to that of BellSouth.

[redacted]

Close Pr 5/1/6 mtg.

[BellSouth shall provide AT&T at least sixty (60) days' advance notice of any scheduled maintenance activity which may impact AT&T's end users. Scheduled maintenance shall include, without limitation, such activities as, switch software retrofits, power tests, major equipment replacements and cable rolls. Plans for scheduled maintenance shall include, at a minimum, the following information: location and type of facilities, specific work to be performed, date and time work is scheduled to commence, work schedule to be followed, date and time work is scheduled to be completed, estimated number of work-hours for completion.] [OPEN-AT&T]

OK **5.3 Interconnection Compensation**

6 4/28

OK 5.3.1 6.1 4/28

Compensation for Local Traffic

[redacted]

For reciprocal compensation between the Parties pursuant to this Attachment, Local Traffic is defined as ~~means~~ any telephone call that originates and terminates in the same LATA except for those calls that are originated or terminated through switched access arrangements as established by the ruling regulatory body~~and is billed by the originating Party as a local call~~ [when the originating Party has its own switch]. [OPEN-AT&T] Therefore, when an AT&T end user originates traffic and AT&T sends it to BellSouth for termination, AT&T will determine whether the traffic is local or intraLATA toll. When a BellSouth end user originates traffic and BellSouth sends it to AT&T for termination, BellSouth will determine whether the traffic is local or intraLATA toll. Each Party will provide the other with information that will allow it to distinguish local from intraLATA toll traffic. At a minimum, each Party shall utilize NXX's in such a way that the other Party shall be able to distinguish local from intraLATA toll traffic. The NPA's/NXX of the orig end user shall be the ~~sole~~ basis for distinguishing local from intraLATA toll traffic

6.1.1 4/28

Issue for Bill & Dave

[redacted]

Do we need this?

Local + toll calls will be determined by [redacted] exchange (NPA) of party

DISAGREE

AT&T PROPOSAL: As clarification of this definition and for reciprocal compensation, Local Traffic does include traffic that originates from or terminates to or through an enhanced service provider or information service provider.

BST PROPOSAL: As clarification of this definition and for reciprocal compensation, Local Traffic does not include traffic that originates from or is directed to or through an enhanced service provider or information service provider.

[redacted]

6.1.3 New 4/28

The Parties recognize and agree that the compensation for the transport and termination of Local Traffic are intended to allow each Party to recover costs associated with such traffic. The Parties recognize and agree that such compensation will not be billed and shall not be paid for calls where a Party sets up a call, or colludes with a third party to set up a call, to the other Party's network for the purpose of receiving reciprocal compensation, and not for the purposes of providing a telecommunications service to an end user.~~As further clarification, Local Traffic does **not include traffic that consists of minutes of use from any end user customer that relies upon a call placed by that end user customer or on the end user customer's behalf to establish or maintain a network connection, if: (a) minutes of use to be billed are primarily associated with traffic of a type not routinely and ordinarily recognized by a reasonable person to constitute traffic as a result of a telephone**~~

OK

~~call (i.e., voice or data traffic); (b) the end user customer does not control the destination of the call; and (c) the minutes of use do not serve a legitimate purpose that is unrelated to the receipt of reciprocal compensation or any other benefit that may be derived solely from establishing or maintaining the network connection.~~

[redacted] 4/28

The Parties shall provide for the mutual and reciprocal recovery of the costs for the network facilities utilized in transporting and terminating local traffic on each other's network. The Parties agree that charges for transport and termination of calls on their respective networks are as set forth in Exhibit A to this Attachment.

OK 5.3.1.3 6.1.5 4/28

For the purposes of this Attachment 3, Common (Shared) Transport is defined as the transport of one Party's traffic by the other Party over the other Party's common (shared) facilities between the other Party's tandem switch and end office switch and/or between the other Party's tandem switches.

OK 5.3.1.4 6.1.6 4/28

For the purposes of this Attachment 3, Tandem Switching is defined as the function that establishes a communications path between two switching offices through a third switching office (the Tandem switch).

OK 5.3.1.5 6.1.7 4/28

For the purposes of this Attachment 3, End Office Switching is defined as the function that establishes a communications path between the trunk side and line side of the End Office switch.

[redacted]

In the event that AT&T elects to offer service within a LATA using a switch located in another LATA, AT&T agrees to provide the transport for both Parties' traffic between the remote AT&T switch and a point (i.e., a facility point of presence) within the LATA in which AT&T offers service. Such facility point of presence shall be deemed to be an AT&T Switch ~~Center~~ for the purposes of this Attachment. ~~If AT&T utilizes a switch outside the LATA and BellSouth chooses to purchase dedicated or common (shared) transport from AT&T for transport and termination of BellSouth originated traffic, BellSouth will pay AT&T no more than the airline miles between the V & H coordinates of the Point of Interface within the LATA where AT&T receives the BellSouth originated traffic and the V & H coordinates of the BellSouth Exchange Rate Center Area that the AT&T terminating NPA/NXX is associated in the same LATA. For these situations, BellSouth will compensate AT&T at either dedicated or common (shared) transport rates specified in Exhibit A and based upon the network facilities provided by AT&T as defined in this Attachment 3.~~

This is a language from Parties Both.

OK

RMC Cont

[redacted] **DISAGREE**

6.1.9 4/28

AT&T PROPOSAL: ~~Neither Party shall represent access services traffic (e.g., Internet Protocol Telephony, FGA, FGB, etc.) as Local Traffic for purposes of payment of reciprocal compensation. "Internet Protocol Telephony" is defined as real-time voice conversations over the Internet by converting voices into data which is compressed and split into packets, which are sent over the Internet like any other packets and reassembled as audio output at the receiving end.~~

BST PROPOSAL: Neither Party shall represent access services traffic (e.g., Internet Protocol Telephony, FGA, FGB, etc.) as Local Traffic for purposes of payment of reciprocal compensation. "Internet Protocol Telephony" is defined as real-time voice conversations over the Internet by converting voices into data which is compressed and split into packets, which are sent over the Internet like any other packets and reassembled as audio output at the receiving end.

5.3.2 [Unidentifiable traffic. AT&T shall utilize its NPA/NXXs in such a way and will provide the necessary information so that BellSouth shall be able to distinguish local from intraLATA toll traffic for BellSouth originated traffic. AT&T end users assigned NPA/NXX line numbers shall be physically located in the BellSouth rate center with which the NPA/NXX has been associated. Whenever BellSouth delivers traffic to AT&T for termination on the AT&T's network, if BellSouth cannot determine, because of the manner in which AT&T has utilized its NXX codes whether the traffic is local or toll, BellSouth will charge the applicable rates for originating intrastate network access service as reflected in BellSouth's Intrastate Access Services Tariff. BellSouth will make appropriate billing adjustments if AT&T can provide sufficient information for BellSouth to determine whether said traffic is local or toll.] [OPEN-BST]

5.3.3 Percent Local Use. Each Party will report to the other a Percentage Local Usage ("PLU"). The application of the PLU will determine the amount of local minutes to be billed to the other Party. For purposes of developing the PLU, each Party shall consider every local call and every long distance call, excluding intermediary traffic. BellSouth shall report quarterly PLU factors to AT&T. BellSouth will accept from AT&T monthly PLU factors provided under the previous agreement until the third quarter of 2001, at which time AT&T shall report quarterly PLU factors. ~~[By the first of January, April, July and October of each year,~~ BellSouth and AT&T shall also provide a positive report updating the PLU. Detailed requirements associated with PLU reporting shall be as set forth in BellSouth's Standard Percent Local

Use Reporting Platform for Interconnection Purchasers, as it is amended from time to time during this Agreement.~~] [OPEN-AT&T]~~ Notwithstanding the foregoing, where the terminating company has message recording technology that identifies the traffic terminated, such information, in lieu of the PLU factor, shall at the company's option be utilized to determine the appropriate reciprocal compensation to be paid.

~~5.3.3.1[Notwithstanding the reporting interval set forth in Section 5.3.3, BellSouth will accept and implement a monthly PLU, for a period of twelve (12) months, whenever AT&T gains an end user whose calling pattern and traffic would likely have an impact on the PLU reported by AT&T or whenever AT&T opens a new calling area or begins marketing local services in a new area. After reporting the PLU monthly for a twelve (12) month period, the PLU reporting will revert to quarterly. Unless the monthly reporting demonstrates that the PLU has stabilized, then the reporting party will continue to report a monthly PLU for an additional six (6) month period or until the Parties agree that the PLU has stabilized, whichever occurs first. In all other instances, the PLU reporting shall be quarterly.] [OPEN-AT&T]~~

OK

5.3.4 Percent Local Facility. Each Party shall report to the other a Percent Local Facility ("PLF"). The application of the PLF will determine the portion of switched dedicated transport to be billed per the local jurisdiction rates. The PLF shall be applied to multiplexing, local channel and interoffice channel switched dedicated transport utilized in the provision of local interconnection trunks. Each Party shall update its PLF on the first of January, April, July and October of the year and shall send it to the other Party to be received no later than 30 calendar days after the first of each such month to be effective the first bill period the following month, respectively. Requirements associated with PLU and PLF calculation and reporting shall be as set forth in BellSouth's Percent Local Use/Percent Local Facility Reporting Guidebook, as it is amended from time to time.

OK from MJ

OK

~~5.3.4~~5.3.5 Percentage Interstate Usage. For combined interstate and intrastate AT&T traffic terminated by BellSouth over the same facilities, AT&T will be required to provide a projected Percentage Interstate Usage ("PIU") to BellSouth. All jurisdictional report requirements, rules and regulations for Interexchange Carriers specified in BellSouth's Intrastate Access Services Tariff will apply to AT&T. After interstate and intrastate traffic percentages have been determined by use of PIU procedures, the PLU factor will be used for application and billing of local interconnection. Notwithstanding the foregoing, where the

6.1.12
4/28

terminating company has message recording technology that identifies the traffic terminated, such information, in lieu of the PLU factor, shall at the company's option be utilized to determine the appropriate reciprocal compensation to be paid.

~~5.3.5~~5.3.6 Audits. On thirty (30) days' written notice, each Party must provide the other the ability and opportunity to conduct an annual audit of the traffic reported. BellSouth and AT&T shall retain records of call detail for a minimum of nine months from which a PLU and/or PIU can be ascertained. The audit shall be accomplished during normal business hours at an office designated by the Party being audited. Audit requests shall not be submitted more frequently than one (1) time per calendar year. Audits shall be performed by a mutually acceptable independent auditor paid for by the Party requesting the audit. The PLU and/or PIU shall be adjusted based upon the audit results and shall apply to the usage for the quarter the audit was completed, to the usage for the quarter prior to the completion of the audit, and to the usage for the two quarters following the completion of the audit. If, as a result of an audit, either Party is found to have overstated the PLU and/or PIU by twenty percentage points (20%) or more, that Party shall reimburse the auditing Party for the cost of the audit.

OK 6.1.13 4/28

5.4 Compensation for IntraLATA Toll Traffic

5.4.1 IntraLATA Toll Traffic. IntraLATA Toll Traffic is defined as any telephone call that originates and terminates in the same LATA and is billed by the originating Party as a toll call.

5.4.2 Compensation for IntraLATA Toll Traffic. For terminating its IntraLATA Toll Traffic on the other Party's network, the originating Party will pay the terminating Party's intrastate or interstate terminating switched access tariff rates as set forth in the effective intrastate or interstate access services tariff, whichever is appropriate. The appropriate charges will be determined by the routing of the call. If BellSouth or AT&T is the other Party's end user's presubscribed interexchange carrier or if an end user uses BellSouth or AT&T as an interexchange carrier on a 101XXXX basis, BellSouth or AT&T will charge the other Party the appropriate tariff charges for originating switched access services.

OK 5.4.3 Compensation for 800 Traffic. Each Party shall compensate the other pursuant to the appropriate switched access charges, including the database query charge as set forth in the each Party's intrastate or interstate switched access tariffs.

6.1.14 4/28

OK 5.4.4 Records for 8YY Billing. Each Party will provide to the other the appropriate records necessary for billing intraLATA 8YY customers.

6.1.15 4/28

Records required for billing end users purchasing 8YY Services shall be provided pursuant to Attachment 6 of this Agreement, incorporated herein by this reference.

Transit Traffic Service. BellSouth shall provide tandem switching and transport services for AT&T's transit traffic. Transit traffic is traffic originating on AT&T's network that is switched and/or transported by BellSouth and delivered to a third party's network, or traffic originating on a third Party's network that is switched and/or transported by BellSouth and delivered to AT&T's network . Rates for local transit traffic shall be the applicable call transport and termination charges as set forth in Exhibit A to this Attachment. Rates for intraLATA toll and Switched Access transit traffic shall be the applicable call transport and termination charges as set forth in BellSouth Interstate or Intrastate Switched Access tariffs. Switched Access transit traffic presumes that AT&T's end office is subtending the BellSouth Access Tandem for switched access traffic to and from AT&T's end users utilizing BellSouth facilities, either by direct trunks with the IXC, or via the BellSouth Access Tandem. Billing associated with all transit traffic shall be pursuant to MECAB procedures. Wireless Type 1 traffic shall not be treated as transit traffic from a routing or billing perspective. Wireless Type 2A traffic shall not be treated as transit traffic from a routing or billing perspective until BellSouth and the Wireless carrier have the capability to properly meet-point-bill in accordance with Multiple Exchange Carrier Access Billing ("MECAB") guidelines.

[OSS Rates – To the extend AT&T orders a Service and Element for the purpose of interconnection, the OSS Rates set forth in Exhibit __ of Attachment 2, incorporated herein by this reference, shall apply.] [OPEN-AT&T]

Exhibit B

Basic Architecture

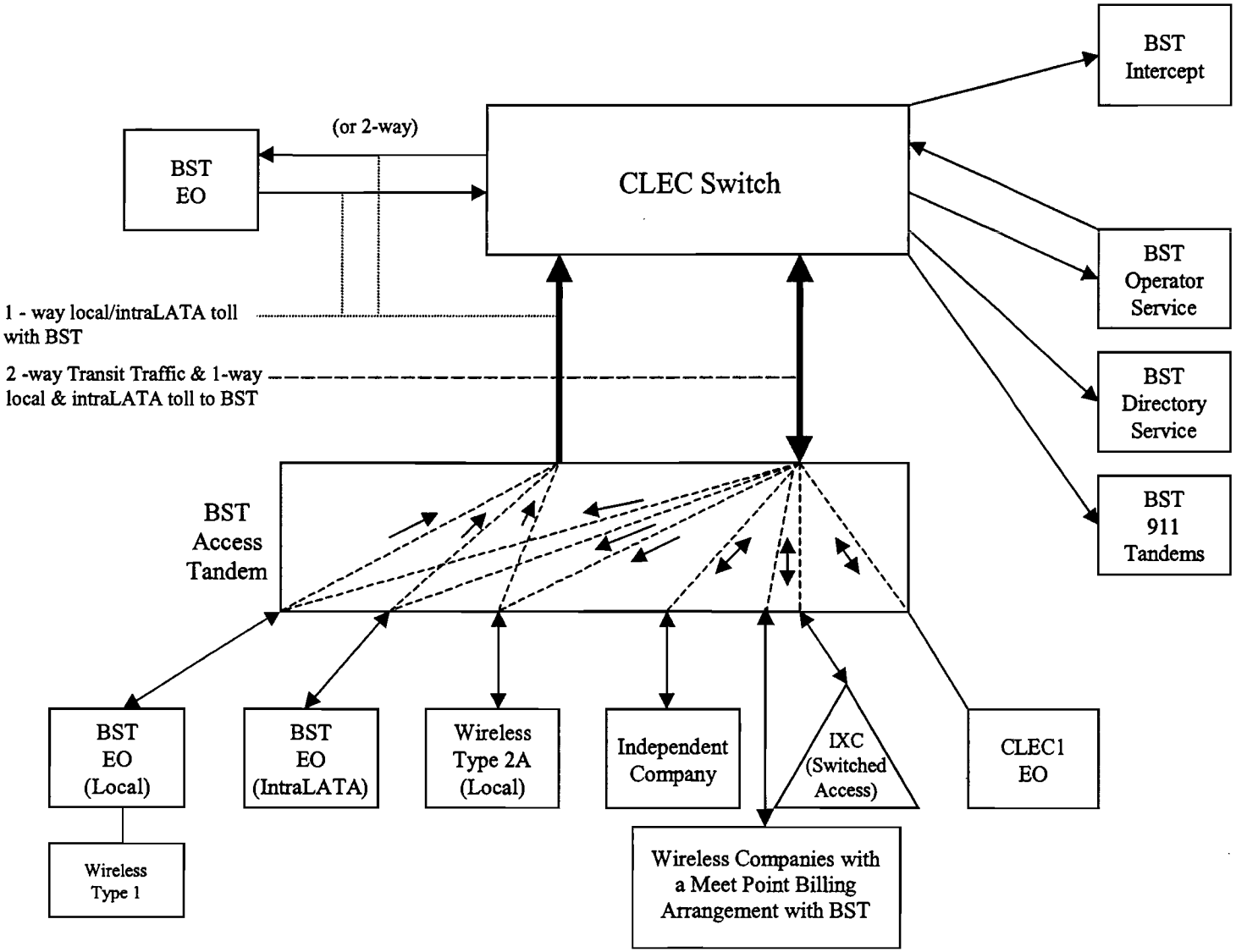

Exhibit C

One-Way Architecture

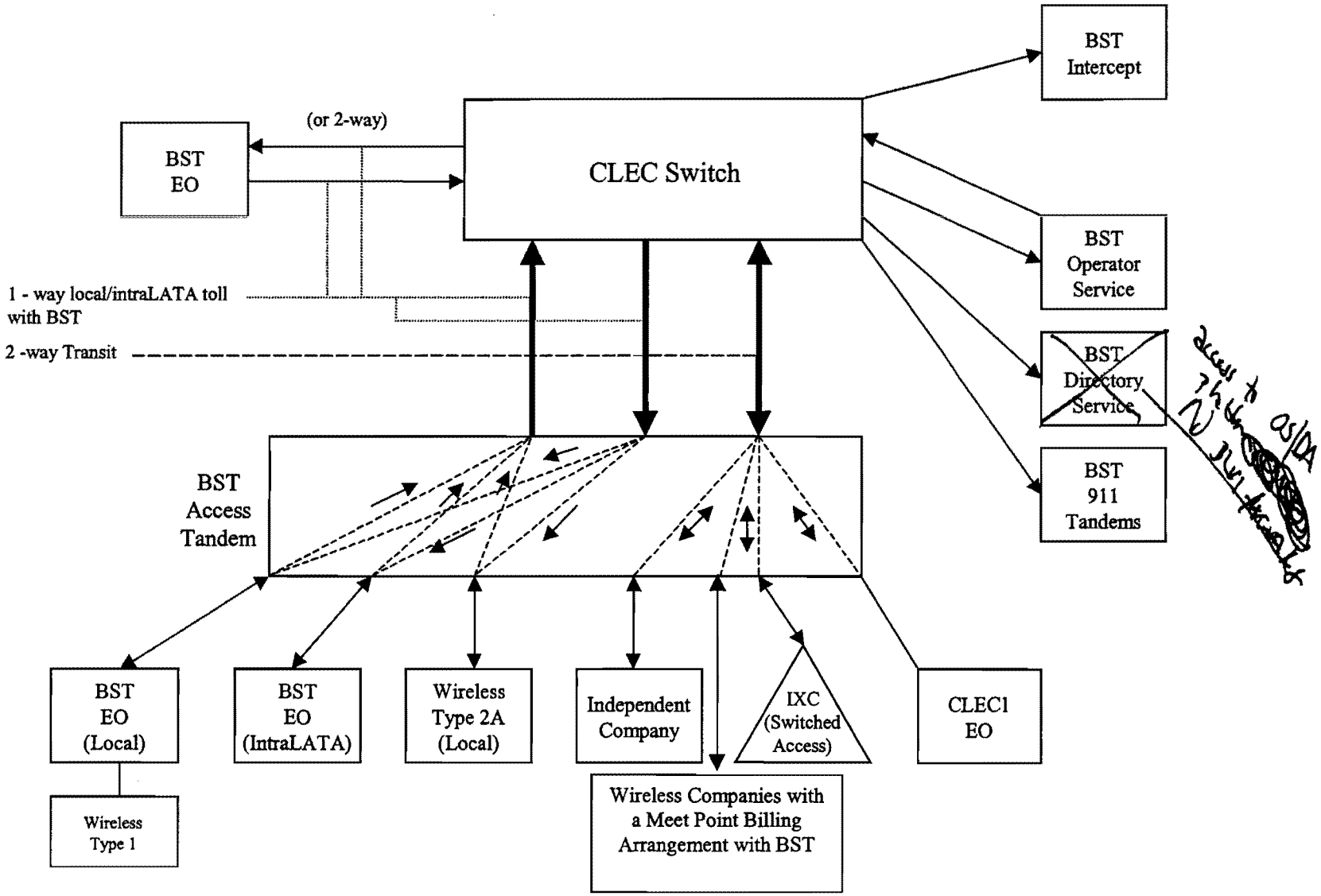

Exhibit D

Two-Way Architecture

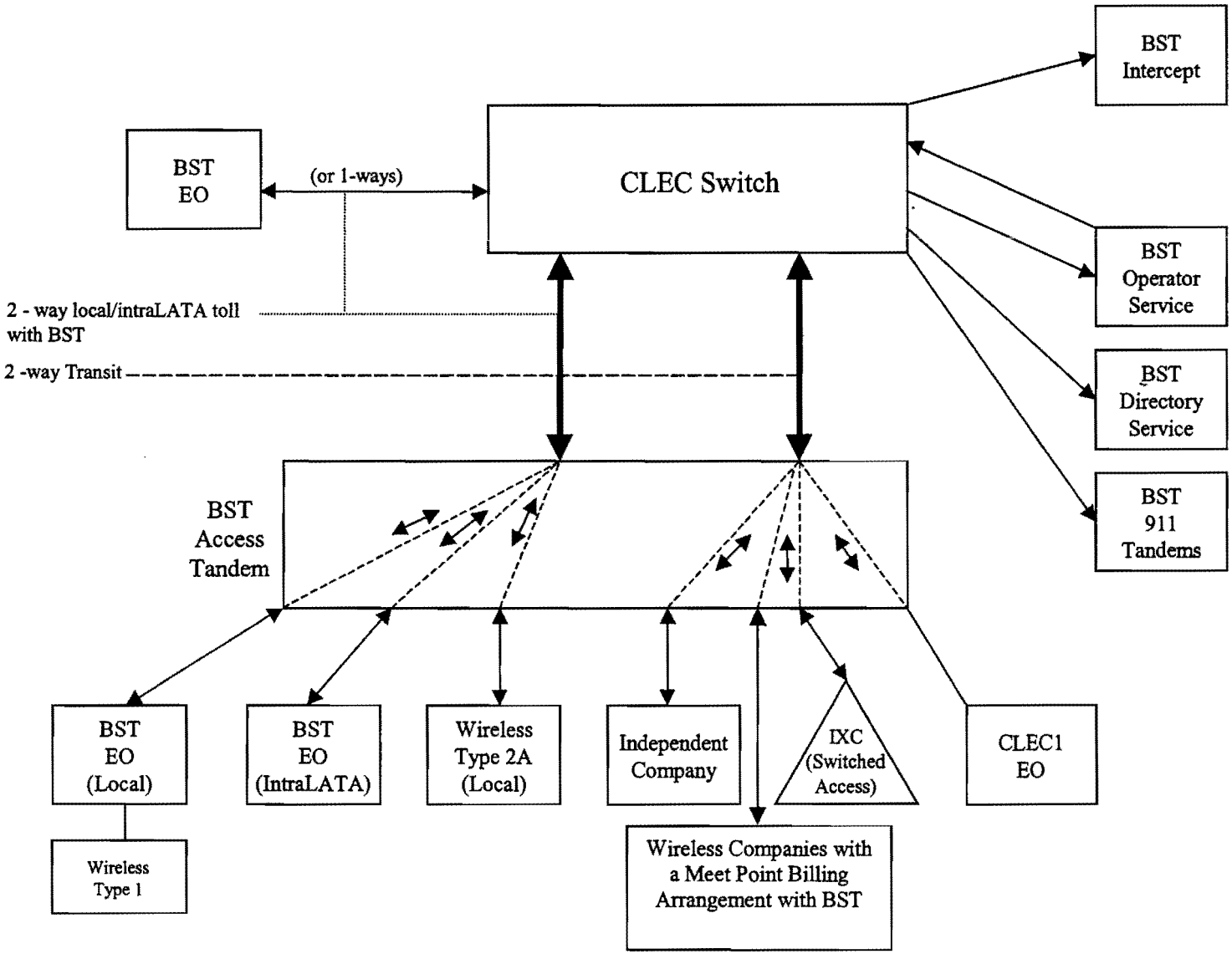

Exhibit E

Supergroup Architecture

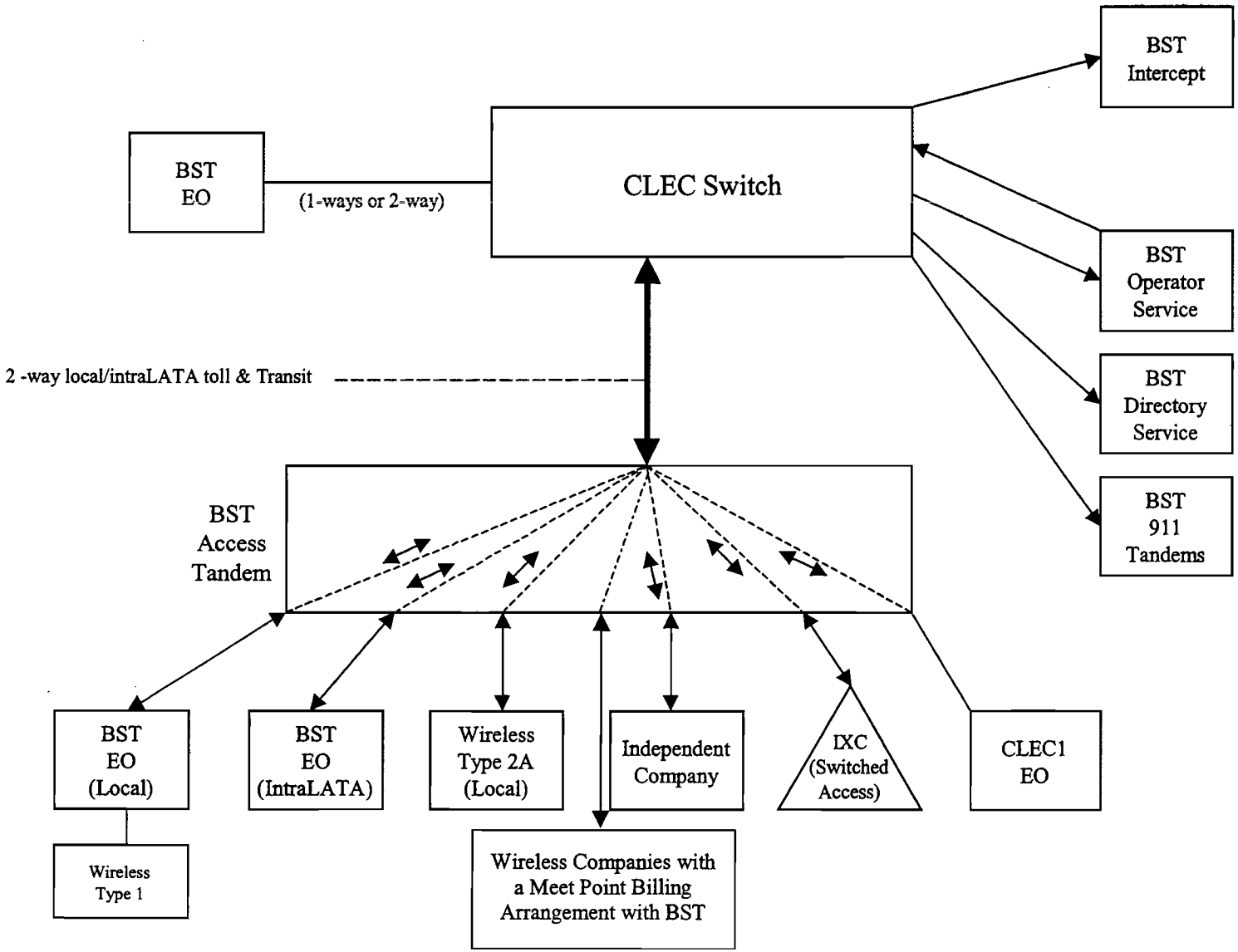

ATTACHMENT 3

LOCAL INTERCONNECTION

DISAGREE:

5.3.1.1
5.3.1.7

OPEN-AT&T

1.2
1.5
1.7
1.8
1.9 – 1.11
2.2.2
2.7
3.2 – 3.5
3.6.7
3.18.1.1
4.13.5.3
5.2
5.3.1.1
5.3.3
5.3.3.1
6

OPEN-BST

1.2
1.4.3
1.4.4
1.5
1.7
1.8
1.9 – 1.11
2.2.2
3.2 – 3.5
3.6.6
3.6.7
3.7
3.8
3.9
4.14.1
5.3.2

EXHIBIT
Stevens 4
1-2003 DR
Alexander Gallo Associates, Inc.

TABLE OF CONTENTS

1. NETWORK INTERCONNECTION 33
2. METHODS OF INTERCONNECTION 55
3. INTERCONNECTION TRUNKING AND ROUTING 108
4. NETWORK DESIGN AND MANAGEMENT FOR INTERCONNECTIONERROR! BOOKMAI
5. NETWORK MAINTENANCE 2119

EXHIBIT A

EXHIBIT B

EXHIBIT C

EXHIBIT D

EXHIBIT E

EXHIBIT F

LOCAL INTERCONNECTION

OK **1. NETWORK INTERCONNECTION**

OK 1.1 The Parties shall provide interconnection with each other's network for the transmission and routing of telephone exchange service (local) and exchange access (intraLATA toll and switched access).

[redacted] OPEN BellSouth shall provide interconnection with BellSouth's network at any technically feasible point within BellSouth's network. OPEN BST

[redacted] OPEN AT&T shall provide interconnection to BellSouth at any mutually agreed upon point. OPEN BST

[redacted] OPEN AT&T Proposed rmv OPEN BST **[AT&T must establish, at a minimum, a single [redacted] Point of Interconnection with BellSouth within the LATA for the delivery of AT&T's [redacted] local, intraLATA toll terminated to BellSouth and transit traffic terminated to other than BellSouth.][OPEN-BST/AT&T]** If AT&T chooses to interconnect ~~at a~~using a single ~~Point of Interconnection~~interconnection trunk group within a LATA, the interconnection trunk group must be at a BellSouth access or local tandem. Furthermore, AT&T must establish an ~~Points of Interconnection~~interconnection trunk group(s) at all BellSouth access and local tandems where AT&T NXXs are "homed." A "Homing" arrangement is defined by a "Final" Trunk Group between the BellSouth access or local tandem and AT&T End Office switch. A "Final" Trunk Group is the last choice telecommunications path between the access or local tandem and End Office switch. It is AT&T's responsibility to enter its own NPA/NXX access and/or local tandem "homing" arrangements into the national Local Exchange Routing Guide ("LERG"). In order for AT&T to home its NPA/NXX(s) on a BellSouth access or local tandem, AT&T's NPA/NXX(s) must be assigned to an exchange rate center area served by that BellSouth access or local tandem and as specified by BellSouth.

1.3 OK A Point of Presence is the physical location (a structure where the environmental, power, air conditioning, etc. specifications for a Party's terminating equipment can be met) at which a Party establishes itself for obtaining access to the other Party's network. The Point of Presence is the physical location within which the Point(s) of Interface occur.

1.4 OK A Point of Interface is the physical telecommunications interface between BellSouth and AT&T's interconnection facilities. It

establishes the technical interface and point of operational responsibility. The primary purpose of the Point of Interface is to serve as the terminus for each Party's interconnection facilities. The Point of Interface has the following main characteristics:

1.4.1 OK It is a cross-connect point to allow connection, disconnection, transfer or restoration of service.

1.4.2 OK It is a point where BellSouth and AT&T can verify and maintain specific performance objectives.

1.4.3 OK It is specified according to the interfaces offered in this Attachment 3.

[redacted] ? V 5/12 version OK ~~[The Point of Interconnection is the point at which the originating Party delivers its originated traffic to the terminating Party's first point of switching on the terminating Party's common (shared) network for call transport and termination. Points of Interconnection~~Interconnection trunk groups are available at either access tandems, local tandems, End Offices, or any other technically feasible point, as described in this Agreement. AT&T's requested ~~Point of Interconnection~~interconnection trunk ~~will~~groups will also be used for the receipt and delivery of transit traffic at BellSouth access and local tandems. Interconnection trunk groups~~Points of Interconnection~~ established at the BellSouth local tandem apply only to AT&T-originated local and local originating and terminating transit traffic.~~] [OPEN-BST/AT&T]~~

1.6 OK The Parties will work cooperatively to establish the most efficient trunking network in accordance with the provisions set forth in this Attachment 3 and accepted industry practices.

1.7 OK Each party will be responsible for engineering its network (i.e., the underlying facilities on which trunks are provisioned) and providing, or causing to be provided, any necessary equipment on its side of the Point of Interface.] AT&T, at its option, shall establish Points of Presence and Points of Interface for the delivery of its originated local and intraLATA toll traffic to BellSouth. ~~The Point of Interface may not necessarily be established at the Point of Interconnection.~~

Open BST **[BellSouth shall designate the Points of Presence and Points of Interface for the delivery of its originated local and intraLATA toll traffic to AT&T for call transport and termination by AT&T.] [OPEN-BST/AT&T]** Propose delete

[redacted] Open AT&T Get u Talbott **[For the purposes of this Attachment 3, Local Channel is defined as a switch transport facility between a Party's Point of Presence and its designated serving wire center.[open AT&T]**

1.10 OK For the purposes of this Attachment 3, Serving Wire Center is defined as the wire center owned or leased by one Party from which the other Party would normally obtain dial tone for its Point of Presence.

[redacted] OPEN Dave AT&T **For the purposes of this Attachment 3, Dedicated Transport is defined as a switch transport facility between a Party's designated serving wire center and the first point of switching on the other Party's common (shared) network.] [OPEN-~~BST/~~AT&T]**

[redacted] **METHODS OF INTERCONNECTION** [redacted]

OK rmv "tion" 2.1 ~~The Parties shall interconnect their networks utilizing one of the following methods in accordance with the provisions set forth in this Attachment 3.~~ AT&T may specify one or more of the following methods to interconnect~~ion~~ with the BellSouth network:

2.1.1 OK Collocation - BellSouth shall provide collocation to AT&T pursuant to the terms set forth in Attachment 4 of this Agreement, incorporated herein by this reference. AT&T may, at its option, purchase such collocation at the rates, terms, and conditions set forth in Attachment 4 of this Agreement, incorporated herein by this reference.

[redacted] OPEN AT&T Change seems OK **Leased Facilities - [redacted]. Such leased facilities shall be provided at the rates, terms, and conditions set forth in this Attachment 3. At AT&T's request, it may lease separate facilities for the sole purpose of delivering undipped 8YY traffic from AT&T's end users to BellSouth's Switching Services Port ("SSP") for dipping into BellSouth's toll free database.[BST proposes slight change – open to ATT]** Service Switching Port

[redacted] OPEN AT&T Change seems OK **2.1.3 Third Party Facilities - [redacted] AT&T shall comply with industry standards to maintain network integrity and will be solely responsible for any charges or fees assessed by the third party for use of its facilities.[BST proposes slight change – open to ATT]**

2.1.4 OK Commercial Intra-building Interconnection – where both Parties have constructed broadband facilities into a commercial building (i.e., a

building that is not a telephone central office) and agree to establish a Point of Interface at such location utilizing intra-building cable.

[redacted] "Fiber Meet" is an interconnection arrangement whereby the Parties physically interconnect their networks via an optical fiber interface (as opposed to an electrical interface), at which one Party's facilities, provisioning, and maintenance responsibility begins and the other Party's responsibility ends (i.e., Point of Interface). A Fiber Meet shall be an arrangement as set forth in [redacted] of this Attachment 3.

2.3

2.1.6 Any other method determined to be technically feasible and requested by AT&T shall be done pursuant to the process defined in Attachment 10 of this Agreement, incorporated herein by this reference.

OK

[redacted] ~~Interconnection by one Party at the premises of the other Party.~~BellSouth may specify one or more of the following to interconnect~~ion~~ with the AT&T network:

interconnection

[redacted] Collocation - AT&T, at its sole discretion, may permit BellSouth to utilize space and power in AT&T facilities specified by AT&T solely for the purpose of terminating BellSouth's ~~local~~ traffic. BellSouth may request installation of both cable and equipment, or cable only. The pricing, terms and conditions of such arrangement shall be pursuant to Exhibit [redacted] of this Attachment 3, incorporated herein by this reference.

[redacted] **Leased Facilities - where the Party requesting interconnection utilizes the facilities offered by the other Party. Such leased facilities shall be provided at the rates, terms, and conditions set forth in this Attachment 3.[BST proposal to ATT – open to ATT]**

OPEN ATT

2.2.2 3/1/13 Page

~~2.2.1~~2.2.3 Third Party Facilities - where BellSouth utilizes the facilities provided by a source other than itself or AT&T. BellSouth shall comply with industry standards to maintain network integrity and will be solely responsible for any charges or fees assessed by the third party for use of its facilities.

OK

2.2.4 Commercial Intra-building Interconnection – where both Parties have constructed broadband facilities into a commercial building (i.e., a building that is not a telephone central office) and agree to establish a Point of Interface at such location utilizing intra-building cable.~~BellSouth shall provide collocation to AT&T pursuant to the terms set forth in Attachment 4 of this Agreement, incorporated herein by this reference. AT&T may, at its option, purchase such collocation at the rates, terms, and conditions set forth in Attachment 4 of this Agreement, incorporated herein by this reference.~~

OK

2.2.5 "Fiber Meet" is an interconnection arrangement whereby the

OK

ATT OK

Parties physically interconnect their networks via an optical fiber interface (as opposed to an electrical interface), at which one Party's facilities, provisioning, and maintenance responsibility begins and the other Party's responsibility ends (i.e., Point of Interface). A Fiber Meet shall be an arrangement as set forth in [redacted] of this Attachment 3. [BST proposal to ATT – open to ATT] 2.3

2.2.6 Any other method determined to be technically feasible and requested by BellSouth and agreed to by AT&T shall be done. ~~[AT&T, at its sole discretion, may permit BellSouth to utilize space and power in AT&T facilities specified by AT&T solely for the purpose of terminating BellSouth's local traffic. BellSouth may request installation of both cable and equipment, or cable only. The pricing, terms and conditions of such arrangement shall be pursuant to Exhibit [redacted] of this Attachment 3, incorporated herein by this reference.] [OPEN-BST/AT&T]~~

OK

~~2.3Leased Facilities – where the Party requesting interconnection utilizes the facilities offered by the other Party. Such leased facilities shall be provided at the rates, terms, and conditions set forth in this Attachment 3. At AT&T's request, it may lease separate facilities for the sole purpose of delivering undipped 8YY traffic from AT&T's end users to BellSouth's Switching Services Port ("SSP") for dipping into BellSouth's toll free database.~~

OK

~~2.4Third Party Facilities – where the Party requesting interconnection utilizes the facilities provided by a source other than the Parties to this Agreement. The Party utilizing this option shall comply with industry standards to maintain network integrity and will be solely responsible for any charges or fees assessed by the third party for use of its facilities.~~

~~2.5Commercial Intra-building Interconnection – where both Parties have constructed broadband facilities into a commercial building (i.e., a building that is not a telephone central office) and agree to establish a Point of Interface at such location utilizing intra-building cable.~~

~~2.6"Fiber Meet" is an interconnection arrangement whereby the Parties physically interconnect their networks via an optical fiber interface (as opposed to an electrical interface), at which one Party's facilities, provisioning, and maintenance responsibility begins and the other Party's responsibility ends (i.e., Point of Interface). A Fiber Meet shall be an arrangement as set forth in Section 2.9 of this Attachment 3.~~

~~2.7Any other method determined to be technically feasible and requested by AT&T shall be done pursuant to the process defined in Attachment 10 of this Agreement, incorporated herein by this reference. Any other method determined to be technically feasible and requested by BellSouth and agreed to by AT&T shall be done pursuant to [redacted] [OPEN-AT&T]~~

4/12

~~2.8 Local Tandem Interconnection. This interconnection arrangement allows AT&T to establish a Point of Interconnection at BellSouth local tandems for: (1) the delivery of AT&T-originated local traffic transported and terminated by BellSouth to BellSouth end offices within the local calling area as defined in BellSouth's General Subscriber Services Tariff, Section A3 served by those BellSouth local tandems; and (2) for local transit traffic transported by BellSouth for third party network providers who have also established Points of Interconnection at those BellSouth local tandems.~~

OK mvd to 3.3.1

~~2.8.1When a specified local calling area is served by more than one BellSouth local tandem, AT&T must designate a "home" local tandem for each of its assigned NPA/NXXs and establish trunk connections to such local tandems. Additionally, AT&T may choose to establish a Point of Interconnection at the BellSouth local tandems where it has no codes homing but is not required to do so. AT&T may deliver local traffic to a "home" BellSouth local tandem that is destined for other BellSouth or third party network provider end offices subtending other BellSouth local tandems in the same local calling area where AT&T does not choose to establish a Point of Interconnection. It is AT&T's responsibility to enter its own NPA/NXX local tandem homing arrangements into the LERG either directly or via a vendor in order for other third party network providers to determine appropriate traffic routing to AT&T's codes. Likewise, AT&T shall obtain its routing information from the LERG.~~

OK mvd to 3.3.1.1

~~2.8.2Not withstanding establishing Points of Interconnection to BellSouth's local tandems, AT&T must also establish Points of Interconnection to BellSouth access tandems within the LATA on which AT&T has NPA/NXX's homed for the delivery of Interexchange Carrier Switched Access ("SWA") and toll traffic, and traffic to Type 2A CMRS connections located at the access tandems. BellSouth cannot switch SWA traffic through more than one BellSouth access tandem. SWA, Type 2A CMRS or toll traffic routed to the local tandem in error will not be backhauled to the BellSouth access tandem for completion. (Type 2A CMRS interconnection is defined in BellSouth's General Subscriber Services Tariff, Section A35.)~~

OK mvd to 3.3.1.2

~~2.8.3Bell South shall pass transit traffic to other third party network providers subtending these local tandems. However, AT&T shall be responsible directly to that third party for all reciprocal compensation obligations.'s provisioning of local tandem interconnection assumes that AT&T has the necessary local interconnection arrangement with the other third party network providers subtending those local tandems as required by the Act.~~

OK mvd to 3.3.1.3

~~2.92.3~~ **Fiber Meet**

[redacted]

6/12

OK

[redacted] If AT&T elects to establish a [redacted] with BellSouth pursuant to a Fiber Meet, AT&T and BellSouth shall jointly engineer and operate a Synchronous Optical Network ("SONET") transmission system by which they shall interconnect their transmission and routing of local traffic via a Local Channel facility at either the DS0, DS1, or DS3 level and shall be ordered via an Access Services Request ("ASR") in the initial phase of this offering. The Parties shall work jointly to determine the specific transmission system. The parties will work cooperatively to establish joint access to transmission overhead signals and commands for such facilities and software. However, AT&T's SONET transmission must be compatible with BellSouth's equipment in the serving wire center. The Parties will work cooperatively in the selection of compatible transmission equipment and software. [redacted]

Open BST.

2.9.1.

Bill's Tag here - BST acknowledged

AT&T OK

~~2.9.2~~2.3.2 BellSouth shall, wholly at its own expense, procure, install and maintain the agreed upon SONET equipment in the BellSouth Serving Wire Center ("BSWC").

OK

~~2.9.3~~2.3.3 AT&T shall, wholly at its own expense, procure, install and maintain the agreed upon SONET equipment in the AT&T Serving Wire Center ("ASWC").

OK

~~2.9.4~~2.3.4 The parties shall mutually agree upon a Point of Interface outside of the BSWC as a Fiber Meet point and shall make all necessary preparations to receive and to allow and enable delivery of fiber optic facilities into the Point of Interface with sufficient spare length to reach the Point of Interface. A Common Language Location Identification ("CLLI") code will be established for each Point of Interface. The code established must be a building type code. All orders shall originate from the Point of Interface (i.e., Point of Interface to AT&T, Point of Interface to BellSouth).

OK

~~2.9.5~~2.3.5 The Parties shall deliver and maintain their own strands wholly at their own expense. Upon verbal request by either Party, the other Party shall allow access to the Fiber Meet entry point for maintenance purposes as promptly as possible.

OK

~~2.9.6~~2.3.6 The Parties shall jointly coordinate and undertake maintenance of the SONET transmission system. Each Party shall be responsible for maintaining the components of their own SONET transmission system.

OK

~~2.9.7~~2.3.7 Each Party will be responsible for (i) providing its own transport facilities to the Fiber Meet, and (ii) the cost to build-out its facilities to such Fiber Meet.

OK

6/12

~~2.9.8~~2.3.8 Neither Party shall charge the other for its portion of the Fiber Meet facility between the ASWC and the BSWC used exclusively for the other Party's local traffic (i.e., the Local Channel). The Parties do not intend to utilize this arrangement for transit traffic.

OK

3. OK INTERCONNECTION TRUNKING AND ROUTING

3.1 OK The Parties will convert all existing interconnection arrangements and trunks to the interconnection arrangements described in this Attachment in accordance with the following:

~~3.2~~3.1.1 Within 45 days of either Party's written request, the Parties will mutually develop an operations plan based on sound engineering and operations principles, which will specify the guidelines to convert from the existing interconnection arrangements to the interconnection arrangements described in this Attachment 3. Such guidelines will conform to standard industry practices adopted by and contained in documents published by Industry Forums, including but not limited to, the Alliance for Telecommunications Industry Solutions ("ATIS") and the Ordering and Billing Forum ("OBF").

OK

~~3.3~~3.1.2 Each Party shall bear its own costs to convert from the existing interconnection arrangements to the interconnection arrangements described in this Attachment.

OK

~~3.4~~3.1.3 Unless otherwise mutually agreed, the Parties will complete the conversion within one [1] year of the Requesting Party's written request.

OK

~~3.5~~3.1.4 If, following one [1] year after the Requesting ~~Parth's~~ Party's written request, there exists any interconnection trunks which have not been converted to the interconnection arrangements described in this Attachment 3, then either Party may invoke the dispute resolution proceeding, pursuant to Section 16 of the General Terms and Conditions of this Agreement, incorporated herein by this reference.

OK

OK

~~3.6~~3.2 The Parties will use the following interconnection standards:

OK

~~3.6.1~~3.2.1 The Parties agree to establish Binary 8 Zero Sum Extended Superframe line protocol, where technically feasible.

OK

~~3.6.2~~3.2.2 In those cases where either Party's equipment will not support 64K Clear Channel Capability ("CCC"), the Parties agree to establish AMI line coding. Any AMI line coding will be Superframe formatted. DS3 facilities will be provisioned with C-bit parity.

OK

~~3.6.3~~3.2.3 Where additional equipment is required, such equipment shall be obtained, engineered, and installed to support 64K CCC trunks.

~~3.6.4~~3.2.4 All interconnection facilities between the Parties will be sized according to mutual forecasts developed per the requirements of Section 4.14 of this Attachment 3 and sound engineering practices.

OK

~~3.6.5~~3.2.5 Interconnection will be provided utilizing either a DS1 or DS3 interface or, with the mutual agreement of the Parties, another technically feasible interface (e.g., STS-1).

OK

3.3 **Trunking Arrangements**

3.3.1 **Local Tandem Interconnection**. This interconnection arrangement allows AT&T to establish interconnection trunk group(s) at BellSouth local tandems for: (1) the delivery of AT&T-originated local traffic transported and terminated by BellSouth to BellSouth end offices within the local calling area as defined in BellSouth's General Subscriber Services Tariff, Section A3 served by those BellSouth local tandems; and (2) for local transit traffic transported by BellSouth for third party network providers who have also established an interconnection trunk group(s) at those BellSouth local tandems.

OK

3.3.1.1 When a specified local calling area is served by more than one BellSouth local tandem, AT&T must designate a "home" local tandem for each of its assigned NPA/NXXs and establish trunk connections to such local tandems. Additionally, AT&T may choose to establish an interconnection trunk group(s) at the BellSouth local tandems where it has no codes homing but is not required to do so. AT&T may deliver local traffic to a "home" BellSouth local tandem that is destined for other BellSouth or third party network provider end offices subtending other BellSouth local tandems in the same local calling area where AT&T does not choose to establish an interconnection trunk group(s). It is AT&T's responsibility to enter its own NPA/NXX local tandem homing arrangements into the LERG either directly or via a vendor in order for other third party network providers to determine appropriate traffic routing to AT&T's codes. Likewise, AT&T shall obtain its routing information from the LERG.

OK

3.3.1.2 Not withstanding establishing interconnection trunk group(s) to BellSouth's local tandems, AT&T must also establish an interconnection trunk group(s) to BellSouth access tandems within the LATA on which AT&T has NPA/NXX's homed for the delivery of Interexchange Carrier Switched Access ("SWA") and toll traffic, and traffic to Type 2A CMRS connections located at the access tandems. BellSouth cannot switch SWA traffic through more than one BellSouth access tandem. SWA, Type 2A CMRS or toll traffic routed to the local tandem in error will not be backhauled to the BellSouth access tandem for completion. (Type 2A CMRS interconnection is defined in BellSouth's General Subscriber Services Tariff, Section A35.)

OK

~~3.6.6~~3.3.1.3 BellSouth shall pass transit traffic to other third party network providers subtending these local tandems. However, AT&T shall be responsible directly to that third party for all reciprocal compensation obligations.

OK

[redacted] BellSouth and AT&T, upon mutual agreement, shall establish interconnect~~ing~~ion trunk groups and trunking configurations between networks including the establishment of one-way or two-way trunks in accordance with [E[redacted]hereto [redacted] Section [redacted]

Open AT&T Seems OK

~~3.7.6~~3.3.3 All terms and conditions, as well as charges, both non-recurring and recurring, associated with interconnect~~ing~~on trunk groups between BellSouth and AT&T not addressed in Exhibit A shall be as set forth in the appropriate Party's intrastate or interstate tariff for switched access services. For two-way trunking that carries the Parties' local and intraLATA toll traffic, excluding transit traffic, the Parties shall be compensated for the nonrecurring and recurring charges for trunks and DS1 facilities at 50% of the applicable contractual or tariff rates for the services provided by each Party. AT&T shall be responsible for ordering and paying for any two-way trunks carrying transit traffic.

OK

~~3.8~~3.4 All originating toll free service calls for which the end office Party performs the SSP function, if delivered to the tandem Party, shall be delivered by the end office Party using GR-394 CORE format for IXC bound calls, or using GR-317-CORE format for LEC bound calls.

OK

~~3.9~~3.5 Originating Feature Group B calls delivered to either Party's tandem shall use GR-317-CORE signaling format unless the associated FGB carrier employs GR-394-CORE signaling for its FGB traffic at the serving access tandem.

OK

~~3.10~~3.6 The Parties shall deliver over any trunk groups groomed for a specific access tandem only traffic destined for those publicly-dialable NPA NXX codes served by: (1) end offices that directly subtend the access tandem; and (2) those providers (including, but not limited to CMRS providers, other independent LECs, and CLECs) that directly connect to the access tandem.

OK

~~3.11~~3.7 For BellSouth end offices that do not normally subtend tandem for which calls are routed to that end office on an alternate routing basis, BellSouth will provide AT&T its alternative routing (scheme) arrangements. Where BellSouth utilizes alternative arrangements, it shall deliver any traffic through that alternative routing.

OK

~~3.12~~3.8 The Parties shall deliver over any trunk groups groomed for a specific end office only traffic destined for those publicly-dialable NPA NXX

OK

codes served by that end office, unless otherwise agreed to by the Parties.

~~3.13~~3.9 The source for the routing information for all traffic shall be the LERG, unless otherwise agreed to between the Parties.

~~3.14~~3.10 Where either Party delivers over the local traffic trunk groups miscellaneous calls (e.g., time, weather, 976) destined for the other Party, it shall deliver such traffic in accordance with the serving arrangements defined in the LERG.

~~3.15~~3.11 The Parties will cooperate to establish separate, choke trunk groups for the completion of calls to customers such as radio contest lines. Notwithstanding the foregoing, the Parties agree that where the Parties' switch has the capability to perform call gapping and other protective network traffic management controls, separate trunk groups shall not be required to carry such traffic.

~~3.16~~3.12 N11 code traffic shall be routed between the Parties' networks pursuant to accepted industry practice (e.g., over local traffic trunks or over separate trunk groups).

~~3.17~~3.13 Each Party shall establish procedures whereby its operator bureau will coordinate with the operator bureau of the other Party in order to provide Busy Line Verification/Busy Line Verification Interrupt ("BLV/BLVI") services on calls between their respective line side end users for numbers that are not ported.

~~3.18~~3.14 A blocking standard of one-half of one percent (.005) shall be maintained during the average busy hour for final trunk groups carrying jointly provided exchange access traffic between an end office and an access tandem. All other final trunk groups are to be engineered with a blocking standard of one percent (.01). High usage trunk groups shall be sized to an economic CCS parameter mutually agreed to by both Parties.

[redacted] **BellSouth agrees to provide upon request of AT&T, pursuant to [redacted] the General Terms and Conditions of this Agreement, traffic usage data (including, but not limited to, usage, peg and overflow counts) for each AT&T NXX subtending the BellSouth tandem to determine which AT&T traffic by NXX is being blocked. [OPEN-AT&T]**

~~3.18.1.2~~3.14.1.2 Pursuant to Attachment 9, incorporated herein by this reference, BellSouth shall report to AT&T information regarding blocking of interconnection traffic.

~~3.193~~.15 The Parties agree to jointly manage the capacity of interconnection trunk groups to encourage the economic deployment of increasingly robust and diverse interconnection between their networks.

OK

[redacted] NEW ART

4. **NETWORK DESIGN AND MANAGEMENT FOR INTERCONNECTION**

4.1 Network Management and Changes. Both Parties will work cooperatively with each other to install and maintain the most effective and reliable interconnected telecommunications networks, including but not limited to, the exchange of toll-free maintenance contact numbers and escalation procedures. Both Parties agree to provide public notice of changes in the information necessary for the transmission and routing of services using its local exchange facilities or networks, as well as of any other changes that would affect the interoperability of those facilities and networks.

OK

4.2 Interconnection Technical Standards. The interconnection of all networks will be based upon accepted industry/national guidelines for transmission standards and traffic blocking criteria. Interconnecting facilities shall conform, at a minimum, to the technical specifications set forth in the applicable industry standard technical references. Signal transfer point, Signaling System 7 ("SS7") connectivity is required at each interconnection point. BellSouth will provide out-of-band signaling using Common Channel Signaling Access Capability where technically and economically feasible, in accordance with the technical specifications set forth in the applicable industry standard technical references. Facilities of each Party shall provide the necessary on-hook, off-hook answer and disconnect supervision and shall hand off calling number ID (Calling Party Number) when technically feasible.

OK

4.3 Quality of Interconnection. The local interconnection for the transmission and routing of telephone exchange service and exchange access that each Party provides to each other will be at least equal in quality to what it provides to itself and any subsidiary or affiliate, where technically feasible, or to any other Party to which each Party provides local interconnection.

OK

4.4 Common Channel Signaling. Both Parties will provide LEC-to-LEC Common Channel Signaling ("CCS") to each other, where available, in conjunction with all traffic in order to enable full interoperability of CLASS features and functions except for call return. All CCS signaling parameters will be provided, including automatic number identification ("ANI"), originating line information ("OLI") calling company category,

OK

charge number, etc. All privacy indicators will be honored, and each Party will cooperate with each other on the exchange of Transactional Capabilities Application Part ("TCAP") messages to facilitate full interoperability of CCS-based features between the respective networks. The Parties will provide all line information signaling parameters including, but not limited to, Calling Party Number, Charge Number (if it is different from calling party number), and originating line information ("OLI"). For terminating FGD, either Party will pass any CPN it receives from other carriers. All privacy indicators will be honored. Where available, network signaling information such as Transit Network Selection ("TNS") parameter (SS7 environment) will be provided by the end office Party wherever such information is needed for call routing or billing. Where TNS information has not been provided by the end office Party, the tandem Party will route originating exchange access traffic to the IXC using available translations. The Parties will follow all industry Ordering and Billing Forum ("OBF") adopted guidelines pertaining to TNS codes.

4.4.1 OK BellSouth's Common Channel Signaling Access Service ("CCSAS") allows interconnected carriers to exchange signaling information over a communications path that is separate from the message path.

4.4.2 OK The transport portion of CCSAS, commonly referred to as a signaling link, is provided via dedicated 56 kbps out of band signaling connections between the AT&T signaling point of interconnection and BellSouth's signaling point of interconnection ("SPOI").

4.4.3 OK The network termination point where this interconnection takes place is called the Signaling Transfer Point ("STP") port termination.

4.4.4 OK Charges for signaling links and the STP port termination can be found in Attachment 2 of this Agreement, incorporated herein by this reference.

4.4.5 OK Each CCSAS signaling connection provides for two-way digital transmission at speeds in multiples of 56 kbps. The connection to BellSouth's STP pair can be made from either AT&T's signaling point ("SP"), which requires a minimum of two links, or from AT&T's STP pair, which requires a minimum of four links.

4.5 OK SS7 Interconnection will take place at STP locations that are mutually agreed to by the Parties.

4.6 OK Where CCS is not available, in-band multi-frequency signaling will be provided. In such an arrangement, each Party will outpulse the full ten-digit telephone number of the called party to the other Party with

appropriate call set-up and Automatic Number Identification ("ANI") where available, at parity.

4.7 OK The Parties will provide CCS to one another, where and as available, in conjunction with access to call related databases and Service Control Points ("SCP"), including toll free databases, Line Information Database ("LIDB"), Calling Name ("CNAM"), and any other necessary databases.

4.8 OK When the Parties establish new links , each Party shall provide its own STP port termination(s) and charge the other Party for the signaling links as follows

4.8.1 OK Where the SPOI for the signaling link is at a Fiber Meet, there shall be no compensation between the Parties for the signaling link facilities used.

[redacted] OK Where the SPOI for the signaling link facilities is located at the BellSouth Serving Wire Center where the signaling link facilities terminates and AT&T has furnished the interconnection facility, BellSouth will pay a monthly charge equal to one half of the AT&T-provided facility charge according to BellSouth's unbundled rate element for the facility used. Rates for said interconnection facilities shall be as set forth in Exhibit [redacted] in Attachment 2, incorporated herein by this reference.

[redacted] OK Where the SPOI for the signaling link facilities is located at the AT&T Serving Wire Center facility where the signaling link facilities terminate and BellSouth has furnished the interconnection facility, AT&T will pay a monthly charge equal to one half of the BellSouth-provided facility charge according to BellSouth's unbundled rate element for the facility used. Rates for said interconnection facilities shall be as set forth in Exhibit [redacted] in Attachment 2, incorporated herein by this reference.

4.8.4 OK Each party is responsible for all facility maintenance and provisioning on its side of the SPOI.

4.9 OK Implementation of new interconnection arrangements (as opposed to augmentation of existing arrangements), including testing of SS7 interconnection, shall be pursuant to the technical specifications set forth in the applicable industry standard technical references. Each Party will be expected to provide sufficient cooperative testing resources to ensure proper provisioning, including the ability to confirm that AT&T LERG-assigned NPA NXX codes have been opened, translated and routed accurately in all appropriate BellSouth switches. A mutually agreed test calling plan shall be conducted to ensure successful completion of originating and terminating calls.

4.10 OK Message Screening

4.10.1 BellSouth shall set message screening parameters so as to accept messages from AT&T local or tandem switching systems destined to any signaling point in the BellSouth SS7 network or any network interconnected to the BellSouth SS7 network with which the AT&T switching system has a legitimate signaling relationship.

4.10.2 BellSouth shall set message screening parameters so as to accept messages destined to/from an AT&T local or tandem switching system or to/from an AT&T Service Control Point ("SCP") from any signaling point or network interconnected to the BellSouth SS7 network with which the AT&T switching system has a legitimate signaling relationship.

4.11 OK STP Requirements

4.11.1 BellSouth shall provide message transfer part and Signaling Connection Control Point ("SCCP") protocol interfaces in accordance with the technical specifications set forth in the applicable industry standard technical references.

4.12 OK SS7 Network Interconnection

4.12.1 SS7 Network Interconnection is the interconnection of AT&T STPs and AT&T local or tandem switching systems with the BellSouth STPs. This interconnection provides connectivity that enables the exchange of SS7 messages among BellSouth switching systems and databases, AT&T local or tandem switching systems and other third-party switching systems directly connected to the BellSouth SS7 network.

4.12.2 OK SS7 Network Interconnection shall provide connectivity to all components of the BellSouth SS7 network. These include:

4.12.2.1 OK BellSouth local or tandem switching systems;

4.12.2.2 OK BellSouth databases; and

4.12.2.3 OK Other third-party local or tandem switching systems.

4.12.3 OK The connectivity provided by SS7 Network Interconnection shall fully support the functions of BellSouth switching systems and databases and AT&T or other third-party switching systems with [note could be A or D/B link] direct access to the BellSouth SS7 network.

4.12.4 OK SS7 Network Interconnection shall provide transport for certain types of TCAP messages. If traffic is routed based on dialed or translated digits between an AT&T local switching system and a BellSouth or

other third-party local switching system, either directly or via a BellSouth tandem switching system, then it is a requirement that the BellSouth SS7 network convey via SS7 Network Interconnection the TCAP messages that are necessary to provide Call Management services (Automatic Callback, Automatic Recall, and Screening List Editing) between the AT&T local STPs and the BellSouth or other third-party local switch.

4.12.5 When the capability to route messages based on Intermediate Signaling Network Identifier ("ISNI") is generally available on BellSouth STPs, the BellSouth SS7 Network shall also convey TCAP messages using SS7 Network Interconnection in similar circumstances where the BellSouth switch routes traffic based on a Carrier Identification Code ("CIC").

OK

OK

4.12.6 BellSouth shall offer the following SS7 Network Interconnection options to connect AT&T or AT&T-designated local or tandem switching systems or STPs to the BellSouth SS7 network:

4.12.6.1 A-link interface from AT&T local or tandem switching systems; and

4.12.6.2 D/B-link interface from AT&T STPs.

4.12.7 Each interface shall be provided by one or more sets (layers) of signaling links, as follows:

4.12.7.1 An A-link layer shall consist of two links.

4.12.7.2 A D/B-link layer shall consist of four links.

4.12.8 The Parties agree to implement intraoffice diversity for the signaling links so that no single failure of intraoffice facilities or equipment shall cause the failure of any two links in a layer connecting to a BellSouth STP.

4.12.9 Signaling Call Information. BellSouth and AT&T will send and receive 10 digits for local traffic. Additionally, BellSouth and AT&T will exchange the proper call information, i.e., originated call company number and destination call company number, CIC, and OZZ, including all proper translations for routing between networks and any information necessary for billing.

4.13 Trunk Forecasting and Servicing Requirements.

4.12.1 The Parties shall exchange technical descriptions and forecasts of their interconnection and traffic requirements in sufficient detail necessary to establish the interconnections required to assure traffic completion to and from all customers in their respective designated

6/12

O/C

service areas. In order for BellSouth to provide as accurate reciprocal trunking forecasts as possible to AT&T, AT&T must timely inform BellSouth of any known or anticipated events that may affect BellSouth reciprocal trunking requirements. If AT&T refuses to provide such information, BellSouth shall provide reciprocal trunking forecasts based only on existing trunk group growth and BellSouth's annual estimated percentage of BellSouth subscriber line growth.

4.13.1 Both Parties shall meet every six months or at otherwise mutually agreeable intervals for the purpose of exchanging non-binding forecast of its traffic and volume requirements for the interconnection and network elements provided under this Agreement, in the form and in such detail as agreed by the Parties. The Parties agree that each forecast provided under this section shall be deemed "Confidential Information" as set forth in Section 18 of the General Terms and Conditions of this Agreement, incorporated herein by this reference.

4.13.2 The trunk forecast should include trunk requirements for all of the interconnecti~~ng~~on trunk groups for the current year plus the next two future years. The forecast meeting between the two companies may be a face-to-face meeting, video conference or audio conference. It may be held regionally or geographically. Ideally, these forecast meetings should be held at least semi-annually, or more often if the forecast is no longer usable. Updates to a forecast or portions thereof should be made whenever the Party providing the forecast deems that the latest trunk requirements exceed the original quantities by 48 trunks or 10%, whichever is greater. Either Party should notify the other Party if they have measurements indicating that a trunk group is exceeding its designed call carrying capacity and is impacting other trunk groups in the network. Also, either Party should notify the other Party if they know of situations in which the traffic load is expected to increase significantly and thus affect the interconnecti~~ng~~on trunk requirements as well as the trunk requirements within the other Party's network. The Parties agree that the forecast information provided under this section shall be deemed "Confidential Information" as set forth in Section 18 of the General Terms and Conditions of this Agreement, incorporated herein by this reference. Each Party shall provide a specified point of contact for planning, forecasting and trunk servicing purposes.

4.13.3 For a non-binding trunk forecast, agreement between the two Parties on the trunk quantities and the timeframe of those trunks does not imply any liability for failure to perform if the trunks are not available for use at the required time.

4.13.4 Both Parties will manage the capacity of their interconnection trunk groups. BellSouth will issue an ASR to AT&T to order changes

6/12

BellSouth desires to the BellSouth interconnection trunk groups based on BellSouth's capacity assessment. AT&T will issue an ASR to BellSouthBellSouth to order changes AT&T desires to the AT&T interconnection trunk groups based on AT&T's capacity assessment.

4.13.4.1 Either Party may issue a Trunk Group Service Request ("TGSR") to the other Party to order changes it desires to the interconnection trunk groups based on its capacity assessment. The Party receiving the TGSR will, within ten (10) business days, respond with an ASR or an explanation of why it believes an ASR is inappropriate.

4.13.4.2 The Party submitting an ASR will provide complete and accurate tie down inventory assignments in typical industry bay, panel and jack format, or in such other format as the Parties agree, on each order by use of a Design Layout Record. Additional tie down information, such as span information, may be required when applicable.

4.13.4.3 The Parties will prepare ASRs pursuant to the industry standard guidelines of the OBF. When submitting an ASR, BellSouth will identify AT&T's end office in the SEC LOC field of the ASR form.

4.13.4.4 The Party provisioning the ASR will assign to the requesting Party a location code expressed in CLLI code format that will appear in the Access Customer Terminal Location Field of the ASR.

4.13.5 The standard interval used for the provisioning of additions to local interconnection trunk groups shall be no greater than ten (10) business days, for orders of fewer than ninety-six (96) DS-0 trunks. Other orders shall be determined on an individual case basis. Where feasible, either Party will expedite installation, upon the other Party's request.

4.13.6 Major projects shall be limited to those projects that require the coordination and execution of multiple orders or related activities between and among BellSouth and AT&T work groups specifically relating to: (i) the initial establishment of local interconnection trunk groups; (ii) extending service into a new area; (iii) NXX code moves; (iv) facility grooming; or (v) network rearrangements. If orders that are component pieces of a major project are submitted after project implementation has been jointly planned and coordinated, they shall be submitted with a major project reference. Several orders submitted at one time may not be classified as a major project without the consent of the submitting Party. Each Party will identify a single point of contact that will be responsible for overall coordination and management of a major project through an agreed completion point.

OK

4.13.7 As provided herein, AT&T and BellSouth agree to exchange escalation lists which reflect contact personnel including vice president level officers. These lists shall include name, department, title, phone number, and fax number for each person. AT&T and BellSouth agree to exchange an up-to-date list promptly following changes in personnel or information.

4.14 Interference or Impairment

4.14.1 Within three (3) business days of receipt of notification of blocking of traffic originated within the other Party's network, the Parties shall determine and begin work to implement reasonable corrective measures in a manner consistent with industry practices.

4.15 Local Dialing Parity

4.15.1 BellSouth and AT&T shall provide local and toll dialing parity to each other with no unreasonable dialing delays. Dialing parity shall be provided for all originating telecommunications services that require dialing to route a call. BellSouth and AT&T shall permit similarly situated telephone exchange service end users to dial the same number of digits to make a local telephone call notwithstanding the identity of the end user's or the called party's telecommunications service provider.

5. NETWORK MAINTENANCE

5.1 Outage Repair Standard

5.1.1 In the event of an outage or trouble in any arrangement, facility, or service being provided by BellSouth hereunder, BellSouth will follow procedures for isolating and clearing the outage or trouble that are no less favorable than those that apply to comparable arrangements, facilities, or services being provided by BellSouth to itself, Affiliate or any other carrier whose network is connected to that of BellSouth.

OPEN AT&T

[BellSouth shall provide AT&T at least sixty (60) days' advance notice of any scheduled maintenance activity which may impact AT&T's end users. Scheduled maintenance shall include, without limitation, such activities as, switch software retrofits, power tests, major equipment replacements and cable rolls. Plans for scheduled maintenance shall include, at a minimum, the following information: location and type of facilities, specific work to be performed, date and time work is scheduled to commence, work schedule to be followed, date and time work is scheduled to be completed, estimated number of work-hours for completion.]

[~~OPEN-AT&T~~]BST proposed the following alternative language on 6/6/01:

OPEN AT&T

Both Parties will work cooperatively with each other to install and maintain the most effective and reliable interconnected telecommunications networks, including but not limited to, the exchange of toll-free maintenance contact numbers and escalation procedures. Both Parties agree to provide public notice of changes in the information necessary for the transmission and routing of services using its local exchange facilities or networks, as well as of any other changes that would affect the interoperability of those facilities and networks pursuant to 47 C.F.R §§51.325 – 51.335.]

BST Proposal

5.3 OK **Interconnection Compensation**

5.3.1 OK Compensation for Local Traffic

[redacted]

OPEN BST

For reciprocal compensation between the Parties pursuant to this Attachment, Local Traffic is defined as ~~means~~ any telephone call that originates and terminates in the same LATA except for those calls that are originated or terminated through switched access arrangements as established by the ruling regulatory body~~and is billed by the originating Party as a local call~~ [when the originating Party has its own switch]. [OPEN-AT&T] Therefore, when an AT&T end user originates traffic and AT&T sends it to BellSouth for termination, AT&T will determine whether the traffic is local or intraLATA toll. When a BellSouth end user originates traffic and BellSouth sends it to AT&T for termination, BellSouth will determine whether the traffic is local or intraLATA toll. Each Party will provide the other with information that will allow it to distinguish local from intraLATA toll traffic. At a minimum, each Party shall utilize NXX's in such a way that the other Party shall be able to distinguish local from intraLATA toll traffic.

DISAGREE

AT&T PROPOSAL: As clarification of this definition and for reciprocal compensation, Local Traffic does include traffic that originates from or terminates to or through an enhanced service provider or information service provider.

BST PROPOSAL: As clarification of this definition and for reciprocal compensation, Local Traffic does not include traffic that originates from or is directed to or through an enhanced service provider or information service provider.

OK

The Parties recognize and agree that the compensation for the transport and termination of Local Traffic are intended to allow each Party to recover costs associated with such traffic. The Parties recognize and agree that such compensation will not be billed and shall not be paid for calls where a Party sets up a call, or colludes with a third party to set up a call, to the other Party's network for the purpose of receiving reciprocal compensation, and not for the purposes of providing a telecommunications service to an end user.

5.3.1.2 OK

The Parties shall provide for the mutual and reciprocal recovery of the costs for the network facilities utilized in transporting and terminating local traffic on each other's network. The Parties agree that charges for transport and termination of calls on their respective networks are as set forth in Exhibit A to this Attachment.

5.3.1.3 OK

For the purposes of this Attachment 3, Common (Shared) Transport is defined as the transport of one Party's traffic by the other Party over the other Party's common (shared) facilities between the other Party's tandem switch and end office switch and/or between the other Party's tandem switches.

5.3.1.4 OK

For the purposes of this Attachment 3, Tandem Switching is defined as the function that establishes a communications path between two switching offices through a third switching office (the Tandem switch).

5.3.1.5 OK

For the purposes of this Attachment 3, End Office Switching is defined as the function that establishes a communications path between the trunk side and line side of the End Office switch.

5.3.1.6 OK

In the event that AT&T elects to offer service within a LATA using a switch located in another LATA, AT&T agrees to provide the transport for both Parties' traffic between the remote AT&T switch and a point (i.e., a facility point of presence) within the LATA in which AT&T offers service. Such facility point of presence shall be deemed to be an AT&T ~~S~~switch ~~Center~~ for the purposes of this Attachment.

~~5.3.1.7~~

DISAGREE

OPEN BST

AT&T PROPOSAL: ~~**Neither Party shall represent access services traffic (e.g., Internet Protocol Telephony, FGA, FGB, etc.) as Local Traffic for purposes of payment of reciprocal compensation. "Internet Protocol Telephony" is defined as real-time voice conversations over the Internet by converting voices into data which is compressed and split into packets, which are sent over the Internet like any other packets and reassembled as audio output at the receiving end.**~~

BST PROPOSAL: Neither Party shall represent access services traffic (e.g., Internet Protocol Telephony, FGA, FGB, etc.) as Local Traffic for purposes of payment of reciprocal compensation. "Internet Protocol Telephony" is defined as real-time voice conversations over the Internet by converting voices into data which is compressed and split into packets, which are sent over the Internet like any other packets and reassembled as audio output at the receiving end.

5.3.2 **[Unidentifiable traffic. AT&T shall utilize its NPA/NXXs in such a way and will provide the necessary information so that BellSouth shall be able to distinguish local from intraLATA toll traffic for BellSouth originated traffic. AT&T end users assigned NPA/NXX line numbers shall be physically located in the BellSouth rate center with which the NPA/NXX has been associated. Whenever BellSouth delivers traffic to AT&T for termination on the AT&T's network, if BellSouth cannot determine, because of the manner in which AT&T has utilized its NXX codes whether the traffic is local or toll, BellSouth will charge the applicable rates for originating intrastate network access service as reflected in BellSouth's Intrastate Access Services Tariff. BellSouth will make appropriate billing adjustments if AT&T can provide sufficient information for BellSouth to determine whether said traffic is local or toll.] [OPEN-BST]**

OPEN BST

5.3.3 Percent Local Use. Each Party will report to the other a Percentage Local Usage ("PLU"). The application of the PLU will determine the amount of local minutes to be billed to the other Party. For purposes of developing the PLU, each Party shall consider every local call and every long distance call, excluding intermediary traffic. BellSouth shall report quarterly PLU factors to AT&T. BellSouth will accept from AT&T monthly PLU factors provided under the previous agreement until the [redacted], at which time AT&T shall report quarterly PLU factors. BellSouth and AT&T shall also provide a positive report updating the PLU. Detailed requirements associated with PLU reporting shall be as set forth in BellSouth's Standard Percent Local Use Reporting Platform for Interconnection Purchasers, as it is amended from time to time during this Agreement. Notwithstanding the foregoing, where the terminating company has message recording technology that identifies the traffic terminated, such information, in lieu of the PLU factor, shall at the company's option be utilized to determine the appropriate reciprocal compensation to be paid.

OK

5.3.4 Percent Local Facility. Each Party shall report to the other a Percent Local Facility ("PLF"). The application of the PLF will determine the portion of switched dedicated transport to be billed per the local jurisdiction rates. The PLF shall be applied to multiplexing, local channel and interoffice channel switched dedicated transport utilized in the provision of local interconnection trunks. Each Party shall update its PLF on the first of January, April, July and October of the year and shall send it to the other Party to be received no later than 30 calendar days after the first of each such month to be effective the first bill period the following month, respectively. Requirements associated with PLU and PLF calculation and reporting shall be as set forth in BellSouth's Percent Local Use/Percent Local Facility Reporting Guidebook, as it is amended from time to time.

OK

5.3.5 Percentage Interstate Usage. For combined interstate and intrastate AT&T traffic terminated by BellSouth over the same facilities, AT&T will be required to provide a projected Percentage Interstate Usage ("PIU") to BellSouth. All jurisdictional report requirements, rules and regulations for Interexchange Carriers specified in BellSouth's Intrastate Access Services Tariff will apply to AT&T. After interstate and intrastate traffic percentages have been determined by use of PIU procedures, the PLU factor will be used for application and billing of local interconnection. Notwithstanding the foregoing, where the terminating company has message recording technology that identifies the traffic terminated, such information, in lieu of the PLU factor, shall at the company's option be utilized to determine the appropriate reciprocal compensation to be paid.

OK

5.3.6 Audits. On thirty (30) days' written notice, each Party must provide the other the ability and opportunity to conduct an annual audit of the traffic reported. BellSouth and AT&T shall retain records of call detail for a minimum of nine months from which a PLU and/or PIU can be ascertained. The audit shall be accomplished during normal business hours at an office designated by the Party being audited. Audit requests shall not be submitted more frequently than one (1) time per calendar year. Audits shall be performed by a mutually acceptable independent auditor paid for by the Party requesting the audit. The PLU and/or PIU shall be adjusted based upon the audit results and shall apply to the usage for the quarter the audit was completed, to the usage for the quarter prior to the completion of the audit, and to the usage for the two quarters following the completion of the audit. If, as a result of an audit, either Party is found to have overstated the PLU and/or PIU by twenty percentage points (20%) or more, that Party shall reimburse the auditing Party for the cost of the audit.

OK

5.4 OK Compensation for IntraLATA Toll Traffic

5.4.1 OK IntraLATA Toll Traffic. IntraLATA Toll Traffic is defined as any telephone call that originates and terminates in the same LATA and is billed by the originating Party as a toll call.

5.4.2 OK Compensation for IntraLATA Toll Traffic. For terminating its IntraLATA Toll Traffic on the other Party's network, the originating Party will pay the terminating Party's intrastate or interstate terminating switched access tariff rates as set forth in the effective intrastate or interstate access services tariff, whichever is appropriate. The appropriate charges will be determined by the routing of the call. If BellSouth or AT&T is the other Party's end user's presubscribed interexchange carrier or if an end user uses BellSouth or AT&T as an interexchange carrier on a 101XXXX basis, BellSouth or AT&T will charge the other Party the appropriate tariff charges for originating switched access services.

5.4.3 OK Compensation for 800 Traffic. Each Party shall compensate the other pursuant to the appropriate switched access charges, including the database query charge as set forth in the each Party's intrastate or interstate switched access tariffs.

5.4.4 OK Records for 8YY Billing. Each Party will provide to the other the appropriate records necessary for billing intraLATA 8YY customers. Records required for billing end users purchasing 8YY Services shall be provided pursuant to Attachment 6 of this Agreement, incorporated herein by this reference.

5.4.5 [redacted]. BellSouth shall provide tandem switching and transport services for AT&T's transit traffic. Transit traffic is traffic originating on AT&T's network that is switched and/or transported by BellSouth and delivered to a third party's network, or traffic originating on a third Party's network that is switched and/or transported by BellSouth and delivered to AT&T's network . Rates for local transit traffic shall be the applicable call transport and termination charges as set forth in Exhibit A to this Attachment. Rates for intraLATA toll and Switched Access transit traffic shall be the applicable call transport and termination charges as set forth in BellSouth Interstate or Intrastate Switched Access tariffs. Switched Access transit traffic presumes that AT&T's end office is subtending the BellSouth Access Tandem for switched access traffic to and from AT&T's end users utilizing BellSouth facilities, either by direct trunks with the IXC, or via the BellSouth Access Tandem. Billing associated with all transit traffic shall be pursuant to MECAB procedures. Wireless Type 1 traffic shall not be treated as transit traffic from a routing or billing perspective. Wireless Type 2A traffic shall not be treated as transit traffic from a routing or billing perspective until BellSouth and the Wireless carrier

agreed to disagreement

OPEN AT&T We'll [illegible] Image

Is Bill's lang w/ new stuff?

have the capability to properly meet-point-bill in accordance with Multiple Exchange Carrier Access Billing ("MECAB") guidelines.

[redacted]

OPEN AT&T

~~[OSS Rates – To the extend AT&T orders a Service and Element for the purpose of interconnection, the OSS Rates set forth in Exhibit __ of Attachment 2, incorporated herein by this reference, shall apply.] [OPEN-AT&T]~~

$ 91.00

NORTH CAROLINA UTILITIES COMMISSION

TRANSCRIPT OF TESTIMONY

COMPLAINT OF AT&T COMMUNICATIONS OF THE SOUTHERN STATES, LLC, TELEPORT COMMUNICATIONS GROUP, INC. AND TCG OF THE CAROLINAS, INC. FOR ENFORCEMENT OF INTERCONNECTION AGREEMENTS WITH BELLSOUTH TELECOMMUNICATIONS, INC.

DOCKET NO. P-55 SUB 1076

VOLUME 2 OF 3

DATE JANUARY 22, 2003

FLORIDA PUBLIC SERVICE COMMISSION
DOCKET NO. 030919-TP EXHIBIT NO. 8
COMPANY/ WITNESS: NCUC - Shiroishi Deposition
DATE: 5-07-03

PLACE: Dobbs Building, Raleigh, North Carolina

DATE: Wednesday, January 22, 2003

DOCKET NO.: P-55, Sub 1376

TIME IN SESSION: 1:30 p.m. - 3:00 p.m.

BEFORE: Commissioner Sam J. Ervin, IV, Presiding
Commissioner J. Richard Conder
Commissioner Robert V. Owens, Jr.
Commissioner James Y. Kerr, II
Commissioner Michael S. Wilkins

IN THE MATTER OF:

Complaint of AT&T Communications of the Southern States, LLC, Teleport Communications Group, Inc. and TCG of the Carolinas, Inc. for enforcement of interconnection agreements with BellSouth Telecommunications, Inc.

VOLUME 2 of 3

A P P E A R A N C E S:

FOR BELLSOUTH TELECOMMUNICATIONS, INC.:

Edward L. Rankin, III
General Counsel - North Carolina
Post Office Box 30188
Charlotte, North Carolina 28230
and
Andrew D. Shore
Attorney at Law
675 West Peachtree St. N.E., Suite 4300
Atlanta, Georgia 30375

FOR THE AT&T COMPANIES:

Loretta A. Cecil
Womble, Carlyle, Sandridge & Rice
1201 West Peachtree Street, Suite 3500
Atlanta, Georgia 30309

FOR THE USING AND CONSUMING PUBLIC:

Robin Cauthen, Staff Attorney
Public Staff - N.C. Utilities Commission
4326 Mail Service Center
Raleigh, North Carolina 27699-4326

FLORIDA PUBLIC SERVICE COMMISSION
DOCKET NO. 020919-TP EXHIBIT NO. 8
COMPANY/ WITNESS. NCUC- Transcript
DATE: 5-07-03

1 I N D E X O F E X A M I N A T I O N S

2 PAGE

3 BILLY PEACOCK
Cont'd. Cross (Mr. Shore) 3
4 Cross (Mr. Cauthen) 9
Redirect (Ms. Cecil) 14
5 Exam. (Commissioner Ervin) 23
Exam. (Mr. Shore) 26
6 Exam. (Mr. Cauthen) 27
Exam. (Commissioner Ervin) 29
7
ELIZABETH SHIROISHI
8 Direct (Mr. Shore) 31
Cross (Ms. Cecil) 49
9

10 E X H I B I T S I D E N T I F I E D

11 PAGE

12 ERAS Exhibit 1 32
13 AT&T Shiroishi Cross Exhibit 1 71
14 AT&T Shiroishi Cross Exhibit 2 81
15

16 E X H I B I T S A D M I T T E D

17 PAGE

18 BellSouth Cross Exhibit 5 - 7 30
19
20
21
22
23
24

1 Mr. Kings and Mr. King's rebuttal and Ms. Stevens's
2 rebuttal and I just want to make sure that I had done
3 that for purposes of the record.
4 MS. CECIL: Thank you.
5 COMMISSIONER ERVIN: I believe that completes
6 your case, does it not?
7 MS. CECIL: It does.
8 COMMISSIONER ERVIN: So at this point, I
9 believe, Mr. Shore, the ball's in your court.
10 MR. SHORE: BellSouth would call Elizabeth
11 Shiroishi.
12 ELIZABETH SHIROISHI; Being first duly sworn,
13 testified as follows:
14 COMMISSIONER ERVIN: Mr. Shore, if you would
15 proceed please.
16 DIRECT EXAMINATION BY MR. SHORE:
17 Q. Can you state your full name and business address
18 for the record please?
19 A. My name is Elizabeth R.A. Shiroishi. My business
20 address is 675 West Peachtree Street, Atlanta, Georgia
21 30375.
22 Q. Are you employed by BellSouth Telecommunications?
23 A. Yes, I am.
24 Q. In what capacity?

A. I am an assistant director for negotiations.

Q. Did you cause to be prefiled in this docket, Ms. Shiroishi, 11 pages of prefiled testimony along with one exhibit?

A. Yes, I did.

Q. If I were to ask you the questions today that appear in your prefiled testimony would your answers be the same?

A. I have one correction. On page 9, line 6 I'm quoting from the agreement and the last sentence states "this section is interrelated to section 5.3.1," that reference should be 5.3.1.1. No other changes.

Q. So with that change, if I were to ask you the same questions would your answers be the same?

A. Yes, they would.

MR. SHORE: I would ask that Ms. Shiroishi's prefiled testimony be admitted.

ERAS EXHIBIT 1

IDENTIFIED

(REPORTER'S NOTE: The prefiled testimony of ELIZABETH SHIROISHI will be reproduced in the record at this point the same as if the questions had been orally asked and the answers orally given from the witness stand.)

33

FILED
DEC 18 2002
Clerk's Office
N.C. Utilities Commission

BELLSOUTH TELECOMMUNICATIONS, INC.

DIRECT TESTIMONY OF BETH SHIROISHI

BEFORE THE NORTH CAROLINA UTILITIES COMMISSION

DOCKET NO. P-55, Sub 1376

DECEMBER 18, 2002

Q. PLEASE STATE YOUR NAME, YOUR POSITION WITH BELLSOUTH TELECOMMUNICATIONS, INC. ("BELLSOUTH") AND YOUR BUSINESS ADDRESS.

A. My name is Elizabeth R. A. Shiroishi. I am employed by BellSouth as Assistant Director, Interconnection Services Marketing. My business address is 675 West Peachtree Street, Atlanta, Georgia 30375.

Q. PLEASE PROVIDE A BRIEF DESCRIPTION OF YOUR BACKGROUND AND EXPERIENCE.

A. I graduated from Agnes Scott College in Decatur, Georgia, in 1997, with a Bachelor of Arts Degree in Classical Languages and Literature. I began employment with BellSouth in 1998, in the Interconnection Services Pricing Organization as a pricing analyst. I then moved to a position in product management, and now work as Assistant Director, Interconnection Services Marketing. In this position, I am responsible both for negotiating and for overseeing the negotiations of Interconnection Agreements, as well as Local Interconnection issues.

Q. WHAT IS THE PURPOSE OF YOUR TESTIMONY?

A. My testimony establishes that BellSouth has applied the appropriate charges for reciprocal compensation in accordance with the definition of "Local Traffic" as set forth in the Interconnection Agreement between BellSouth and AT&T. I rebut the allegations to the contrary of AT&T as set forth in its Complaint and in the testimony of Jeffery A. King dated November 26, 2002. In addition, I explain that it was BellSouth's intent at the time it entered into the Agreement that calls that originated or terminated via switched access arrangements would not be included within the definition of "Local Traffic".

Q. PLEASE EXPLAIN THE DEFINITION OF "LOCAL TRAFFIC" AS IT IS SET FORTH IN THE INTERCONNECTION AGREEMENT.

A. Section 5.3.1.1 of Attachment 3 of the Interconnection Agreement dated July 19, 2001, defines Local Traffic as follows:

> The Parties agree to apply a "LATAwide" local concept to this Attachment 3, meaning that traffic that has traditionally been treated as intraLATA toll traffic will now be treated as local for intercarrier compensation purposes, **except for those calls that are originated or terminated through switched access arrangements** as established by the State Commission or FCC. (emphasis added)

Pursuant to this plain and unambiguous language, the Parties agreed to consider IntraLATA toll traffic as "Local Traffic" unless such traffic ***"originated or terminated through switched access arrangements as established by the State***

1 *Commission or FCC."* The exclusion is specifically targeted at intraLATA
2 traffic.
3
4 Q. HAS BELLSOUTH BREACHED THE INTERCONNECTION AGREEMENTS
5 AS ALLEGED BY AT&T AND AS MR. KING CLAIMS IN HIS TESTIMONY
6 (PAGE 5)?
7
8 A. No. Mr. King is incorrect in his allegation that "all calls transported and
9 terminated within a "LATA" ("LATAwide Traffic"), would be subject to the local
10 reciprocal compensation rates set forth in the Second Interconnection
11 Agreement." As the contract language quoted above says, if an intraLATA call
12 originates or terminates through switched access arrangements, then that call is
13 excluded from the definition of Local Traffic. Such a call would be governed by
14 BellSouth's switched access tariffs and would be subject to the appropriate
15 switched access rates. BellSouth has not breached the Interconnection Agreement
16 by charging AT&T switched access rather than reciprocal compensation rates for
17 intraLATA calls "originated or terminated through switched access
18 arrangements."
19
20 Q. WERE YOU INVOLVED IN THE NEGOTIATION OF THE CONTRACT
21 LANGUAGE AT ISSUE IN THIS PROCEEDING?
22
23 A. Yes. I was very involved in the negotiation of this language with the AT&T
24 negotiation team.
25

1 Q. WAS MR. KING A PART OF THE NEGOTIATIONS?

2

3 A. No. He was not involved in any of the negotiations regarding this contract
4 language. His involvement began after the contract was signed and the dispute
5 arose regarding this language.

6

7 Q. WAS THERE DISCUSSION AND NEGOTIATION REGARDING THE
8 DEFINITION OF LOCAL TRAFFIC?

9

10 A. Yes. AT&T and BellSouth started the negotiations of the Second Interconnection
11 Agreement using a definition of local traffic that was similar to the definition in
12 the First Interconnection Agreement. During the course of negotiations,
13 BellSouth offered to AT&T a definition that it had used with other carriers. This
14 new definition expanded what was considered local within the LATA, but still
15 excluded minutes that traversed switched access arrangements that the carrier had
16 purchased from BellSouth. After discussion about the meaning of the definition
17 and the exclusion, including specific discussion about the fact that the language
18 excluded from the definition of Local Traffic calls that originated or terminated
19 through switched access arrangements, AT&T responded that it wanted to avail
20 itself of this new LATA wide local traffic definition with the exclusion for traffic
21 that originated or terminated through switched access arrangements, but proposed
22 a slight language change. The minor modification (discussed below) did not alter
23 the fact that traffic that traversed switched access arrangements was excluded
24 from the definition of Local Traffic. The parties agreed upon the language and
25 incorporated it into the Agreement.

Q. PLEASE DISCUSS THE CHANGE IN LANGUAGE THAT THE PARTIES NEGOTIATED.

A. BellSouth originally proposed that the exclusion language read "except for those calls that are originated or terminated through switched access arrangements as established by the ruling regulatory body." After discussion around what was meant by "the ruling regulatory body," the Parties modified the words to read "except for those calls that are originated or terminated through switched access arrangements as established by the State Commission or FCC." In the course of these discussions, the Parties discussed the fact that this reference was to the switched access arrangements that are offered for purchase through each Party's switched access tariffs, which are approved by the State Commission (for intrastate switched access) or the FCC (for interstate switched access).

Q. WAS IT THE INTENT OF THE PARTIES TO INCLUDE AS LOCAL TRAFFIC MINUTES THAT ORIGINATED OR TERMINATED THROUGH SWITHCED ACCESS ARRANGEMENTS?

A. Absolutely not. The exclusion was specifically written in order to exclude from the definition of local traffic calls that are considered switched access under tariff. As stated above, we had extensive discussion about the exclusion of traffic that originated or terminated through switched access arrangements. In the course of those discussions, we drew diagrams on the whiteboard and specifically discussed the calls that traversed switched access arrangements and the fact that they would

be expressly excluded from the definition of Local Traffic. I was very surprised when AT&T informed BellSouth after the parties began operating under the Agreement of AT&T's position on the definition of local traffic, since we had had specific discussions about the exclusion.

Q. DOES BELLSOUTH HAVE THIS SAME DEFINITION OF LOCAL TRAFFIC IN INTERCONNECTION AGREEMENTS WITH OTHER CLPS?

A. Yes. BellSouth has multiple interconnection agreements with CLPs that contain the LATA wide definition of local traffic and corresponding exclusion for switched access arrangements.

Q. HAS ANY OTHER CLP TAKEN THE POSITION THAT AT&T IS TAKING IN THIS CASE REGARDING ITS INTERPRETATION OF THIS LANGUAGE?

A. No.

Q. DOES THE EXCLUSION IN THE DEFINITION OF LOCAL TRAFFIC REFERENCE SWITCHED ACCESS TRAFFIC AS DEFINED IN SECTION 5.3.3 OF THE INTERCONNECTION AGREEMENT AS MR. KING CLAIMS ON PAGE 8?

A. No. Mr. King incorrectly states that the exclusion in the local traffic definition is of Switched Access Traffic as defined in Section 5.3.3 of the Interconnection

Agreement. If that were true, the exclusion would state "Switched Access Traffic as defined in Section 5.3.3." Instead, it specifically states that the exclusion is for calls that are "originated or terminated through switched access arrangements." The term switched access arrangements is not the same as the term Switched Access Traffic, and if the Parties intended for the exclusion to reference Section 5.3.3, the reference would have been included.

Further, Mr. King's theory is not logical. Under Mr. King's theory, the definition of Switched Access Traffic does not include any intraLATA traffic. However, the exclusion is specifically for a certain class of intraLATA traffic. Said another way, AT&T's position is that all calls in the LATA are local. If that were correct there would be no need for the exclusion. The language would simply state that all calls in the LATA are local.

Q. DOES BELLSOUTH HAVE AN INTERCONNECTION AGREEMENT WITH AT&T IN ANOTHER STATE THAT HAS A DEFINITION OF LOCAL TRAFFIC WHICH INCLUDES ALL TRAFFIC THAT ORIGINATES AND TERMINATES IN THE LATA?

A. Yes. In the agreement that governs the parties' relationship in Mississippi, BellSouth and AT&T agreed that all calls in the LATA would be considered local. Thus, the definition simply reads, "Local Traffic means any telephone call that originates and terminates in the same LATA." It does not have an exclusion for switched access calls.

Q. ON PAGE 11, MR. KING DISCUSSES THE FACT THAT SECTION 5.3.3 STATES THAT IT IS INTERRELATED TO SECTION 5.3.1. PLEASE EXPLAIN THE REASON THAT THIS STATEMENT WAS INCLUDED IN THE AGREEMENT.

A. The reference to the interrelationship between Section 5.3.1 and 5.3.3 is actually a result of language Mr. King omitted from his testimony. The entire Section 5.3.3 states:

> Switched Access Traffic is defined as telephone calls requiring local transmission or switching service for the purpose of the origination or termination of Intrastate InterLATA and Interstate InterLATA traffic. Switched Access Traffic includes, but is not limited to, the following types of traffic: Feature group A, Feature Group B, Feature Group D, toll free access (e.g. 800/877/888), 900 access, and their successors. Additionally, if BellSouth or AT&T is the other party's end user's presubscribed interexchange carrier or if an end user uses BellSouth or AT&T as an interexchange carrier on a 101XXXX basis, BellSouth or AT&T will charge the other party the appropriate tariff charges for originating switched access services. The Parties have been unable to agree as to whether Voice over Internet Protocol ("VOIP") transmissions which cross local calling area boundaries constitute Switched Access Traffic. Notwithstanding the foregoing, and without waiving any rights with respect to either Party's position as to the jurisdictional nature of VOIP,

41

5

> the Parties agree to abide by any effective and applicable FCC rules and orders regarding the nature of such traffic and the compensation payable by the Parties for such traffic, if any; provided however, that any VOIP transmission which originates in one LATA and terminates in another LATA (i.e, the end-to-end points of the call), shall not be compensated as Local Traffic. This Section is interrelated to Section 5.3.1.

KTM

The reference to the interrelationship was added as the Parties were negotiating mutually agreeable language to deal with Voice over Internet Protocol.

Q. DOES OTHER LANGUAGE IN ATTACHMENT 3 ADDRESS THE MIGRATION TO THIS NEW DEFINITION OF LOCAL TRAFFIC?

Start here

A. Yes. As stated earlier, the parties agreed that the definition of Local Traffic in the Second Interconnection Agreement was to be different from the definition of ~~Local Traffic in the First Interconnection Agreement~~. Further, the definition in the ~~Second~~ [Interconnection] Agreement related to the type of arrangement, or trunk group, that the traffic originated over or terminated through. As such, the parties included a provision in the Interconnection Trunking and Routing section (Section 3) of Attachment 3 that addressed this conversion. Section 3.1 states:

> The Parties will convert all existing interconnection arrangements and trunks to the interconnection arrangements described in this Attachment in accordance with this following . . .

42

(6)

The Section then goes on to give technical specifications as well as process information about starting the conversion. Further, and of important note, are the trunking arrangements described in the interconnection agreement. Sections 3.3.1, 3.17.1, 3.18.1, 3.19.1, and 3.20.1 describe the trunking arrangements that are available via this interconnection agreement. ~~The pages from these Sections are attached as exhibit ERAS-1~~. The descriptions of the trunking arrangements make clear that they are for local and intraLATA toll traffic, and the trunking arrangements are not the same as the switched access trunking arrangements set forth in BellSouth's tariffs. Further, there is no provision in the interconnection agreement allowing for the combination of switched access arrangements with the interconnection arrangements set forth in the interconnection agreement.

End [Tr. Vol 2, P41-42]

Q. ON PAGE 15, MR. KING STATES THAT THERE IS NOT ANY LANGUAGE IN THE INTERCONNECTION AGREEMENT PROVIDING FOR THE ENTITLEMENT TO CHARGE SWITCHED ACCESS RATES. IS THAT RELEVANT?

A. No. BellSouth's tariffs, which are approved by this Commission for intrastate access and by the FCC for interstate access, govern switched access arrangements purchased from them and the traffic flowing over such arrangements.

Q. ARE THE PROVISIONS IN THE INTERCONNECTION AGREEMENT ADDRESSING THE COMPENSATION OWED FOR TRAFFIC RECIPROCAL?

A. Yes. Section 5.3.1 of Attachment 3 of the Interconnection states:

> The Parties agree to apply a "LATAwide" local concept to this Attachment 3, meaning that traffic that has traditionally been treated as intraLATA toll traffic will now be treated as local for intercarrier compensation purposes, except for those calls that are originated or terminated through switched access arrangements as established by the State Commission or FCC.

This language is written reciprocally, and thus applies to each party. To the extent that BellSouth originated or terminated calls through switched access arrangements as defined in the tariff, such calls would be subject to switched access, and not reciprocal compensation, rates.

Q. DOES THAT CONCLUDE YOUR TESTIMONY?

A. Yes.

#473881

1 COMMISSIONER ERVIN: And subject to the ruling
2 I made earlier on the motion to strike, Ms. Shiroishi's
3 testimony is admitted into the record.
4 Q. (MR. SHORE) Ms. Shiroishi, have you prepared a
5 summary of your testimony?
6 A. Yes.
7 Q. Would you give that to the Commission, please?
8 A. Yes. Thank you. The issue in this case is really
9 very simple: What do the parties agree would be
10 considered local under the interconnection agreement
11 between BellSouth and AT&T dated July 19, 2001, which I
12 will refer to as the second interconnection agreement.
13 Whether a call is considered local or not determines
14 what rate is paid for the termination of that call. If
15 a call is local, the reciprocal compensation rates set
16 forth in the parties' second interconnection agreement
17 apply. For calls that are not within the agreed upon
18 definition of "local traffic," the rates set forth in
19 the parties' switched access tariffs apply.
20 To determine what the parties agreed, let's look
21 at the language in the second interconnection agreement
22 which we've heard a lot about today. Section 5.3.1.1 of
23 Attachment 3 to the second interconnection agreement
24 reads: "The parties agree to apply a "LATA-wide" local

(3)

1 concept to this Attachment 3, meaning that traffic that
2 has traditionally been treated as intraLATA toll traffic
3 will now be treated as local for intercarrier
4 compensation purposes, except for calls that -- we
5 discussed the exclusion language. We discussed the
6 phrase "switched access arrangements" as established by
7 the State Commission or FCC." And that such language
8 referenced switched access arrangements for purchase out
9 of either parties' tariff. In fact, we made a minor
10 modification to the language as a result of our
11 discussions. I made it very clear to AT&T's negotiators
12 including its lead negotiator, Mr. Peacock, that the
13 exclusion applied to calls that traversed switched
14 access arrangements. We even drew diagrams to make sure
15 I was clear.
16 I don't have time in my summary to address all of
17 the arguments AT&T has come up with to try to convince
18 you that the exclusion in section 5.3.1.1 doesn't mean
19 what it says, but let me address one: The argument that
20 switched access arrangements in section 5.3.1.1 means
21 quote "switched access traffic" as that term is defined
22 in section 5.3.3. The language in 5.3.3, which is
23 titled "Switched Access Traffic," was inserted as the
24 parties mutually -- sorry -- negotiated mutually

Start here

1 acceptable contract language to address Voice Over IP
2 Protocol (sic) transmissions. Prior to negotiating such
3 contract language addressing VOIP transmissions, there
4 was no definition of switched access traffic in this
5 contract. The issue of VOIP was raised through the
6 context of switched access traffic because that's where
7 the disagreement centered: Were VOIP transmissions
8 switched access or not? As you can see from the
9 language, the parties agreed to disagree on that issue.
10 However, they agreed that VOIP would not be compensated
11 as local. Since VOIP transmissions are not routed over
12 switched access arrangements traditionally, the language
13 just states that VOIP transmissions which originate and
14 terminate in different LATAs shall not be compensated as
15 local. This language was then interrelated back to
16 section 5.3.1.1. And this gets to Commissioner Kerr's
17 question earlier, since section 5.3.1.1 is where the
18 parties agreed that with the exception of calls that
19 originated or terminated over switched access
20 arrangements, calls within the LATA would be treated as
21 local. no IP - keep going
22 Let me tell you for a minute why that
23 interrelationship was important. If the parties had
24 agreed for compensation purposes that local calls would

1 be anything that originated and terminated in the
2 traditional local calling area as opposed to the
3 exception of pro LATA-wide local with the switched
4 access, then the VOIP language would have needed to
5 state that VOIP transmissions which originate and
6 terminate in different local calling areas would not be
7 treated as local. The interrelationship language would
8 ensure that if another CLP requested to adopt VOIP
9 transmissions of the BellSouth/AT&T agreement, it would
10 also adopt the definition of local traffic. If not,
11 there could be an inconsistency between the adopting
12 carrier's definition of local traffic and its applicatio
13 in the VOIP transmission provisions.
14 I'm sure you're all aware of Section 252(i) which
15 allows carriers to adopt.
16 As you can tell from looking at the language, the
17 provisions dealing with VOIP are contained within
18 section 5.3.3, and the exclusion language of 5.3.1.1 was
19 not inserted to address VOIP as you've heard Mr. Peacock
20 testify. If the parties had intended to exclude from
21 the local the definition of VOIP or switched access
22 traffic as a defined term, then that's what the
23 agreement would state. Instead, the provision for local
24 traffic first states that the call must be intraLATA,

1 and then contains exclusion for anything that originates
2 or terminates over switched access arrangements as
3 established by the State Commission or FCC. [Tr. Vol 2, p. 45-48]
4 You heard much discussion from AT&T around many
5 other issues today, but that's just noise to confuse the
6 issue. Again, it's very simple: the second
7 interconnection agreement between the parties excludes
8 from local any call that is originated or terminated
9 over switched access arrangements. That exclusion was
10 included for no other reason than to do just what the
11 plain language says: exclude from local any intraLATA
12 call that is originated or terminated through switched
13 access arrangements. Thank you.
14 MR. SHORE: Ms. Shiroishi is available for
15 cross.
16 COMMISSIONER ERVIN: Ms. Cecil.
17 MS. CECIL: I'll try to adjust this microphone
18 so you can hear me.
19 COMMISSIONER ERVIN: Yours seems to be doing
20 worse than Mr. Shore's and Mr. Cauthen's for some
21 reason.
22 MS. CECIL: We'll try this. It might be
23 better.
24 COMMISSIONER ERVIN: It certainly seems

1 better. Ms. Cecil, like I said, it's our equipment,
2 it's not you.
3 MS. CECIL: Okay.
4 COMMISSIONER ERVIN: Mr. Cauthen, we might let
5 you have your mike back if you behave.
6 CROSS-EXAMINATION BY MS. CECIL:
7 Q. Ms. Shiroishi, I'm going to be asking you about a
8 lot of documents today so I'd like to get started by
9 finding out what documents you have with you as you sit
10 there in the witness chair today.
11 A. I have the testimony filed by both parties,
12 although I do not have all of Mr. Peacock's exhibits. I
13 have the complaint filed by AT&T. I have the BellSouth
14 switched access tariff E6 that was passed out earlier.
15 And I also have my deposition.
16 Q. Okay. We're going to be asking you about
17 Mr. Peacock's Exhibit Number 6 so I'm going to ask that
18 a copy of Peacock Exhibit Number 6 be made available
19 please. We'll get to that in a few minutes.
20 A. I might actually have that one. I don't have
21 number 2 because I had printer problems. Number 6, the
22 reference of language. Yes, I do have that.
23 Q. Good. Okay. Now what did you do to prepare for
24 your testimony today, testifying today?

1 A. Well, in the course of this proceeding, I
2 obviously prepared discovery and interrogatory
3 responses, reviewed the notes from the meetings that we
4 have, and the redlined e-mails that we produced in
5 discovery. I've gone back through BellSouth's switched
6 access tariffs as well as the language in the contract.
7 Q. How recently did you read your deposition
8 transcript?
9 A. A few days ago.
10 Q. Now, unlike Mr. Peacock and Ms. Stevens, this is
11 not the first time that you've testified in a regulatory
12 proceeding, isn't that correct?
13 A. No. This is the first time I've testified in
14 North Carolina.
15 Q. But you've testified before in various regulatory
16 proceedings in Georgia and Florida and now in North
17 Carolina?
18 A. Correct.
19 Q. Tell me about your previous testifying experiences
20 in Florida in particular?
21 A. In Florida, I have testified about issues dealing
22 with reciprocal compensation in some complaint cases
23 against BellSouth regarding ISP-bound traffic prior to
24 the ISP Order on Remand. And in the generic docket

1 there, again, dealing with reciprocal compensation
2 issues and what should the definition of local calling
3 area be.
4 Q. Now, with respect to the proceeding in Florida
5 dealing with compensation for ISP-bound traffic, what
6 position did BellSouth take in that proceeding?
7 A. Which one specifically?
8 Q. The treatment of ISP-bound traffic.
9 A. The generic docket?
10 Q. The generic docket.
11 A. BellSouth's position is that ISP-bound traffic is
12 interstate in nature and not subject to reciprocal
13 compensation.
14 Q. And you have participated in that same docket
15 regarding the definition of local traffic, is that not
16 correct?
17 A. Yes, in a different phase.
18 Q. And what was your position in the Florida
19 proceeding regarding the definition of local traffic?
20 A. Our position there was that the parties should --
21 well, let me give a little reference to that docket.
22 That was a generic docket to establish if parties could
23 not agree upon a default -- or definition of what local
24 traffic should be or local calling area, what should the

1 default be. In that docket, most parties agreed that
2 the parties have been able to mutually negotiate that so
3 that was kind of BellSouth's first position is that the
4 parties -- there's really no need for a default. The
5 parties have traditionally been able to negotiate that.
6 However, if a default was needed, then it should -- the
7 definition should be determined by the local calling
8 area of the originating party. Very similar in nature
9 to some of the earlier interconnection agreements we
10 had.
11 Q. And with respect to the treatment of ISP-bound
12 traffic, BellSouth was taking positions regarding that
13 particular traffic, not only in State Commissions in
14 your territory but also at the FCC, is that not correct?
15 A. Yes, we participated in proceedings at the FCC.
16 Q. And why were you participating in proceedings at
17 the State Commission as well as at the FCC at the same
18 time relative to ISP traffic?
19 A. Prior to the April 27, 2001 ISP Order on Remand,
20 that issue was teed up in all forums because the FCC
21 again -- well, they had made one ruling which was
22 vacated so the issue was opened up and being discussed
23 in both forums as to what the appropriate compensation,
24 if any, was for ISP-bound traffic.

1 Q. And with respect to Voice Over Internet Protocol,
2 that was also an issue that's been discussed in Florida
3 as well, correct?
4 A. Yes. That issue has been discussed.
5 Q. And it's an issue that this Commission has also
6 arbitrated, correct?
7 A. Yes, it is.
8 Q. Has BellSouth filed any pleadings at the FCC
9 dealing with Voice Over Internet Protocol?
10 A. I am not certain off the top of my head about
11 that. They're -- in the context of intercarrier or
12 reciprocal compensation type contexts there may have
13 been phrases to, or excuse me, comments about any type
14 access or jurisdiction but I don't know that there was
15 specifically an open docket about Voice Over IP.
16 Q. Well, with respect to ISP traffic itself, would
17 you agree by virtue of what you were doing at the FCC
18 and what you were doing at the State Commissions that it
19 was confused as to sort of what kind of traffic that was
20 going to turn out to be; whether it was intrastate,
21 interstate; wouldn't you agree with me on that?
22 A. For ISP-bound traffic?
23 Q. Yes.
24 A. That was an open issue in the industry until the

1 ISP Order on Remand.
2 Q. Fair enough. Fair enough. All right. Let's get
3 some background information before we talk about the
4 contract provisions specifically. How old are you?
5 A. Twenty-seven.
6 Q. And as I read your testimony, you graduated from
7 Agnes Scott College or University in Decater, Georgia in
8 1997, is that correct?
9 A. That is.
10 Q. And you have a BA in Classical Language and
11 Literature?
12 A. Correct.
13 Q. Now, you didn't join BellSouth your first year out
14 of undergraduate school, did you? You were a high
15 school teacher for a year, were you not?
16 A. I was.
17 Q. Okay. Then you joined BellSouth in 1998?
18 A. Yes.
19 Q. You were a pricing analyst?
20 A. Yes.
21 Q. And when you took that job you had absolutely no
22 telecommunications experience, did you?
23 A. Correct.
24 Q. And your main qualification that you told me about

1 in your deposition for obtaining that job was that you
2 knew about spread sheets, Excel work sheets, but that
3 you had no specific training in communications?
4 A. In telecommunications, correct.
5 Q. And you stayed at that job with BellSouth for one
6 year until 1999?
7 A. Yes.
8 Q. And then you became a collocation product manager.
9 In fact, you were promoted at that time, were you not?
10 A. Yes, I was.
11 Q. And you reported to Bernard Shell (spelling
12 uncertain)?
13 A. Yes.
14 Q. Mr. Shell's testified I believe before this
15 Commission, has he not?
16 A. I'm not certain.
17 Q. Okay. And isn't it true, Ms. Shiroishi, that when
18 you went into that collocation manager position that
19 your experience as a pricing analyst did not directly
20 relate to that new collocation manager position?
21 A. Again, I had experience working with that product
22 in my former role as pricing analyst doing some work
23 around pricing, but that's the extent.
24 Q. Well, when you were that collocation manager you

1 were not familiar with telecommunication networks in any
2 detail, were you, as we discussed in your deposition?
3 A. Well, actually, I talked about in my deposition,
4 as the pricing analyst role I was responsible for doing
5 research on what type of configurations were used and
6 how they were priced by BellSouth as well as by other
7 ILECs in the industry. And this related to our
8 wholesale offerings in our E6 tariff and E7 tariff
9 special access. So I did have some familiarity with the
10 network architecture in what we call quote, typical
11 configurations.
12 Q. Do you remember what you told me in your
13 deposition about your knowledge of telecommunications
14 networks when you became a collocation manager?
15 A. Yeah, would you like to point me to a cite?
16 Q. Do you remember? I was just asking do you
17 remember.
18 A. I remember talking about what we basically just
19 talked about here.
20 Q. So you're taking the position today that you had
21 knowledge of networks when you went into that
22 collocation product manager position?
23 A. Knowledge as the result of the pricing analyst,
24 nothing specific to collocation.

1 Q. And you stayed in that collocation manager role
2 for only six months, isn't that correct?
3 A. Correct.
4 Q. And you moved from that position and you've been
5 at BellSouth at that point in time about a year and a
6 half, isn't that correct?
7 A. Correct.
8 Q. One year as a pricing analyst and six months as a
9 collocation manager. And you had already been promoted
10 once, isn't that correct?
11 A. Twice actually at that point.
12 Q. So you were promoted twice at that time?
13 A. I was promoted once while I was pricing analyst?
14 Q. Okay. We didn't get that in your deposition. I'm
15 sorry. Now after your collocation product manager
16 position you moved to become an interconnection
17 agreement negotiator, isn't that correct?
18 A. That is.
19 Q. So you had been out of undergraduate school a
20 couple of years, you'd been at BellSouth a year and a
21 half and you became an interconnection negotiator,
22 right?
23 A. Correct.
24 Q. And as you told me in your deposition, you moved

1 to that interconnection negotiation position for "career
2 purposes." Do you remember saying that?
3 A. Yes.
4 Q. Now, I neglected to ask you in your deposition
5 what you mean by "career purposes." Could you tell me
6 today?
7 A. Just to gain more knowledge of BellSouth's
8 wholesale side and all of the different aspects there
9 are of that within our interconnection services
10 department obviously we have various roles and that was
11 to gain more exposure to those different roles.
12 Q. How about to also get promoted again?
13 A. The move to interconnection negotiations was not a
14 promotion.
15 Q. No, but career pathing -- you were interested in
16 getting promoted beyond where you were at the time?
17 A. That wasn't the specific reason I moved. I mean,
18 I was interested in taking on additional or new
19 responsibility.
20 Q. All right. Well, let's stop there. At the time
21 that you moved to that job as an interconnection
22 negotiator for career purposes, how many more times did
23 you get promoted from that time until today?
24 A. I was promoted -- will you ask me again?

1 Q. When you were the interconnection negotiator, you
2 said you had been promoted twice at that point in time?
3 A. Uh huh.
4 Q. How many more times have you been promoted since
5 you had that position?
6 A. Twice and then I actually have received another
7 promotion that will be effective February 1st. So that
8 doesn't -- hasn't actually gone into effect yet.
9 Q. So you've been promoted three times since you were
10 an interconnection negotiator?
11 A. As of February 1st, yes.
12 Q. As of -- now, what's going to be your new title as
13 of February 1st?
14 A. Director.
15 Q. And that will be in the equivalent parlance of the
16 Bell system a fifth level position?
17 A. Yeah. That's a hard thing to equate outside of
18 BellSouth.
19 Q. Isn't it one level short of vice president?
20 A. No, we do have senior director positions at
21 BellSouth.
22 Q. It's getting closer though, isn't it?
23 A. Yes.
24 Q. All right. Now, at the time you became the

1 interconnection negotiator you were between the first
2 and second levels of management, correct?
3 A. Correct.
4 Q. And you stayed in that interconnection negotiator
5 position about a year, until October of 2000, correct.
6 A. Correct.
7 Q. And as you indicated while you were there you were
8 promoted again, right?
9 A. Right.
10 Q. While you were in that position you were promoted
11 again. And then in October of 2000, after being a
12 negotiator for one year, you took on larger CLPs and you
13 had greater number of contracts to manage. That's what
14 you told me in your deposition, isn't that correct?
15 A. Correct.
16 Q. Now, before October of 2000 which were the CLECs
17 that you were managing those contracts from an
18 interconnection negotiation perspective?
19 A. I would have to go back and review my files. I
20 had 75 accounts that were mine.
21 Q. Well, I'd like to know some examples if you can
22 remember. This again, before October of 2000.
23 A. I really don't recall any specific --
24 Q. (Interposing) You can't name one for the

1 Commission?
2 A. ComSouth (spelling uncertain) was one of my CLECs.
3 I don't know if they operate in North Carolina; Smoke
4 Signal (spelling uncertain). Those are two that come to
5 the top of my head because of their ads that run, but I
6 don't recall any others.
7 Q. Could you describe for me the types of
8 interconnection negotiations you had with Smoke Signal?
9 A. Yeah, they're predominately a resale company, but
10 we did have an interconnection agreement with them.
11 Q. Did they adopt another person -- another company's
12 interconnection agreement?
13 A. No. I believe they actually had their own.
14 Q. So you negotiated an interconnection agreement
15 with them?
16 A. To the extent that they proposed changes and we
17 were -- yes.
18 Q. So did they adopt, for the most part, the standard
19 terms and conditions that you proposed?
20 A. I would have to go back and look again.
21 Q. You don't remember?
22 A. No.
23 Q. What about ComSouth? Did you have an
24 interconnection negotiation agreement with them or did

1 they opt into another agreement?
2 A. Again, I don't recall the specifics.
3 Q. All right. Well, let's talk about after October
4 of 2000, for which CLECs, or CLPs here in North
5 Carolina, contracts did you have responsibility at that
6 time?
7 A. At that point I had Birch Telecom. Again, at that
8 point I had moved to larger contracts so I didn't have
9 as many in volume but I think I had about 50 contracts.
10 I didn't review my prior contract assignment list or my
11 contract assignment list prior to coming here. I didn't
12 know that was going to be part of this. But Birch
13 Telecom was one of my customers along with several
14 others. But at that point I was predominately doing
15 interconnection agreements.
16 Q. Now, did Birch adopt another party's
17 interconnection agreement or did you have an
18 interconnection negotiation arbitration with them?
19 A. No, they did negotiate very substantially, but we
20 did not arbitrate.
21 Q. So you came to an agreement. Now, with respect to
22 all the CLECs or CLPs that you had worked with -- by the
23 time you got involved in the AT&T negotiation was AT&T
24 by far the largest company that you had been dealing

1 with from a CLEC perspective?
2 A. No. I don't know that that would be accurate.
3 Let me back up a bit. At the point we were talking
4 earlier, I was actually an interconnection negotiator
5 responsible for the entire provisions and coordinating
6 responses with BellSouth. In October of 2000 is when I
7 took on the responsibilities of local interconnection
8 subject matter negotiator. So at that point I started
9 handling negotiations for all contracts dealings with
10 local interconnection.
11 Q. What was the largest CLEC you had dealt with
12 before you dealt with AT&T?
13 A. Probably Sprint.
14 Q. Okay. And had you been through any arbitrations
15 with Sprint?
16 A. Yes. Sprint did file for arbitration.
17 Q. In which state?
18 A. I don't recall off the top of my head.
19 Q. You don't recall?
20 A. No. I mean, the issues were reached and --
21 Q. (Interposing) Now -- I don't mean to interrupt
22 you. I'm sorry. Now, you testified in your deposition
23 that beginning in mid-2000 when you were a contract
24 negotiator you then started managing or supervising

1 other contract negotiators. Do you remember that?
2 A. Yes.
3 Q. And I believe you told me in your deposition that
4 you stayed in this supervisory position managing other
5 contract negotiators until March of 2001 when you
6 assumed even greater responsibility as a subject matter
7 expert in negotiations. Do you remember that?
8 A. Yes.
9 Q. What do you view a subject matter expert in
10 negotiations to do?
11 A. At that point you are responsible for the final
12 language. You are the person who, if you need to go to
13 other people you can, but typically is the person for
14 BellSouth who comes to the table to speak about a
15 specific issue; not just the document as a whole.
16 Q. And at the time that you were the supervisory --
17 in a supervisory position with other contract
18 negotiators, as I can calculate from your deposition,
19 you had been with BellSouth about three years?
20 A. Correct.
21 Q. So -- and it was in this May 2001 time frame that
22 you first became involved in the North Carolina
23 negotiations?
24 A. For AT&T?

1 Q. Uh huh.
2 A. Correct. A little earlier perhaps but around that
3 time frame.
4 Q. And when you came on the scene relative to the
5 North Carolina AT&T negotiations, the parties had
6 already been negotiating for several months, had they
7 not?
8 A. Actually, yes, a year almost.
9 Q. All right. Now, I want to make sure I get this
10 date. So it was May of 2001 that you came on the scene
11 in North Carolina for the negotiations, isn't that
12 correct?
13 A. Again, it might have been a little earlier than
14 that.
15 Q. Right. And isn't that the date that BellSouth
16 proposed this new definition of local traffic. Didn't I
17 hear commentary that that was in May of 2000 as well?
18 A. Right. The end of May. I think it was around May
19 22nd that that language was proposed.
20 Q. Okay. Now, I also believe that you described your
21 previous position -- I guess your current position,
22 assistant director, your promotion is not going to be
23 effective until February -- I think you told me that
24 you've now got responsibility for all CLEC negotiations

1 that BellSouth has as well as all disputes and all
2 complaints that BellSouth has?
3 (THE COURT REPORTER REQUESTS MS. CECIL TO
4 REPEAT QUESTION DUE TO AN INTERRUPTION IN THE COURT
5 ROOM.)
6 Q. Now I believe you told me in your deposition that
7 your current position as assistant director of
8 interconnection, you've got responsibility for all CLEC
9 contracts plus all disputes or complaints that come out
10 of those contracts. Isn't that correct?
11 A. I'm not sure that I said all disputes or
12 complaints. There are certain -- again, where the
13 dispute lies kind of dictates who at BellSouth handles
14 that. Obviously, we have a billing department that gets
15 involved in certain disputes in other departments. But
16 part of my responsibility is around disputes revolving
17 contract language and interpretation.
18 Q. Okay. Just to put your differing jobs and
19 promotions in perspective: Are you aware of anybody
20 else at BellSouth who has ever been promoted as many
21 times as you've been promoted in such a short period of
22 time?
23 A. I'm sure that there are. I don't -- I haven't
24 actually ever thought about that question, but I'm sure

1 that there are people who have.
2 Q. Now with your recent promotion, are you going to
3 be Jerry Hendricks' peer?
4 A. No.
5 Q. Who are you going to report to in the new
6 position?
7 A. Jerry Hendricks.
8 Q. I want to ask you about your supervisory positions
9 relative to contract negotiators. In the context of
10 those responsibilities what do you advise your contract
11 negotiators about in terms of taking notes relative to
12 interconnection negotiations with CLECs?
13 A. We have -- different people have different styles
14 of doing that but basically they do take notes during
15 the meetings and also maintain the red lines that we
16 talked about earlier that go back and forth between the
17 companies. Also, they're responsible for coordinating
18 internal responses from BellSouth subject matter
19 experts. Obviously, if every one at BellSouth who had
20 to get involved came to the table we'd have a very large
21 negotiation session so they are responsible for
22 coordinating those internal responses.
23 Q. So you let everybody -- all these contract
24 negotiators, as you put it, do their own thing with

1 their own style?
2 A. No. We do have guidelines how we document and
3 where we keep those files. Typically -- I don't know
4 exactly what you're aiming for, but typically after a
5 contract is signed we do not keep those documents unless
6 as case may be we have a lawsuit requiring that or
7 something like that. But after a contract is signed, we
8 move to the first files or permanent files these signed
9 documents, any correspondence, but we don't keep all of
10 the notes because at that time you have a signed
11 contract. There are times when things are kept but
12 that's not part of our records retention requirement.
13 People may have kept notes but it's not required.
14 Q. What's the purpose of making notes if you're going
15 to destroy them right after the interconnection
16 agreement is signed?
17 A. Well, during the negotiations it's important to
18 have a track of whose action items are outstanding and
19 where you need to go to get different things. After an
20 agreement is signed, typically, the hope is that that
21 isn't an issue any longer. The document is complete.
22 Q. All right. I think you said that you would not
23 destroy the notes if there was a lawsuit pending, is
24 that correct?

1 A. Correct. If we have any records retention
2 requirement pursuant to a lawsuit.
3 Q. Now, obviously there were some notes that were
4 destroyed in the context of this negotiation, were there
5 not?
6 A. I don't know about destroyed. There may be notes
7 that did -- I don't know what that connotation means.
8 There were probably notes that existed at one point that
9 we don't have now that after the negotiations were
10 finalized there was no need to keep.
11 Q. Well you know that I asked, or AT&T asked, in
12 discovery for all of your notes. Do you remember that?
13 A. Yes.
14 Q. How many pages of notes did you provide us?
15 A. I don't know the page number. We provided all of
16 the red lines that went back and forth that were kept.
17 Everything that we've had from the time that -- from the
18 time that -- you know, anything that we've had actually
19 from that time period negotiations.
20 Q. Well red-lined contracts and notes are two
21 different things, are they not?
22 A. I guess that depends on how you would define it I
23 guess.
24 Q. I think you said earlier that you keep red-lined

1 versions of the contracts and you destroy the notes?
2 A. No. We actually don't typically keep -- our
3 records retention document or policy after a contract is
4 signed, again, unless there is some outstanding lawsuit
5 that we would need to keep documents, is to keep the
6 final version of the contract, any official
7 correspondence that went back and forth, but not all the
8 versions of red lines. I'm sure you can appreciate that
9 we negotiate with about 450 CLECs in the nine-state
10 region. If we kept every red-lined version we wouldn't
11 have enough file cabinet space.
12 Q. Well, in our discovery request, why then did we
13 get red-lined versions but we only got one set of notes,
14 one page of notes?
15 A. Again, because potentially that negotiator did not
16 keep any notes after the fact.
17 Q. Okay. I'm going to have to get a chart.
18 Ms. Shiroishi, I'm going to have represent to you that
19 that appears to be the only set of notes that we
20 received in our discovery request.
21 COMMISSIONER ERVIN: Ms. Cecil, are we going
22 to mark this?
23 MS. CECIL: Yes, let's do that. Sorry.
24 COMMISSIONER ERVIN: Let's mark this as

1 AT&T --

2 MS. CECIL: (Interposing) AT&T Cross.

3 COMMISSIONER ERVIN: -- AT&T Shiroishi

4 Cross-Examination Exhibit 1.

5 MS. CECIL: Thank you.

6 AT&T SHIROISHI CROSS EXHIBIT 1

7 IDENTIFIED

8 Q. (MS. CECIL) Do you recognize the handwriting on

9 that document?

10 A. Yes.

11 Q. Whose handwriting is it?

12 A. Michael Willis.

13 Q. Do you supervise Michael Willis?

14 A. No, I do not.

15 Q. So, I'm curious, when we put forth a discovery

16 request did you supervise BellSouth's attempt to locate

17 documents in response to that discovery request?

18 A. Yes, I did.

19 Q. Do you look at what was produced to AT&T?

20 A. Yes. Again, I was responsible for coordinating

21 those documents.

22 Q. Are you aware of any other notes that we were

23 provided other than this particular set of pages?

24 A. Not handwritten notes, no.

1 Q. Now, you had indicated again that you would not
2 destroy the notes or other documents if there was a
3 lawsuit pending. Would you destroy notes or red-lined
4 versions if there was a dispute pending?
5 A. I don't know -- again, I think that would be on a
6 case-by-case basis on how we would handle that.
7 Probably we would retain all documents related to a
8 dispute once we knew of the dispute.
9 Q. When did you become aware that there was a dispute
10 between AT&T and BellSouth in this situation relative to
11 the definition of local traffic?
12 A. I believe that the time frame was around
13 September-October of 2001.
14 Q. And the contract had just been signed July 19,
15 2001, is that correct?
16 A. Correct.
17 Q. So you think if there was destroying of notes it
18 took place between that time frame?
19 A. Correct. And, again, the word "destroy" doesn't
20 mean -- you know, we just routinely would have purged
21 the file on that. But, yeah, that would typically
22 happen right after a contract is signed.
23 Q. And your rationale again for destroying those
24 things is what, space?

1 A. Yeah, just space. We don't have room in our
2 building or on our PCs to keep all documents related to
3 all 450 contracts that we negotiate.
4 Q. If you had contract negotiators who came to you
5 and said that they had notes but there was a dispute
6 pending what would you advise them to do?
7 A. Well, at that point, obviously, there would
8 probably be attorneys involved as well. That would
9 probably that's made from a legal standpoint more than a
10 business standpoint.
11 Q. Okay. Now, I guess -- when I took your deposition
12 I didn't ask you a lot about documents because you said
13 you were still looking for them and I respected that,
14 and we were going to talk about them subsequently. I
15 guess now is a good time for me to ask the question.
16 Did you make notes of your conversations with
17 Mr. Peacock?
18 A. Typically, during negotiations sessions I would
19 write on a red-lined version the changes we
20 negotiated -- not necessarily notes around those
21 discussions -- and then would turn around a red line
22 back to that company, or in this case AT&T the next day
23 or in the days following. So I did not keep extensive
24 notes of the discussions; just the changes that were

1 made and then produced that document back to the other
2 company for their review.
3 Q. What about an important issue like the definition
4 of local traffic. If the parties were discussing that,
5 as you say that they have discussed it, would notes be
6 taken on an issue like that?
7 A. Again, the notes that I keep in that capacity as
8 subject matter expert, and each negotiator who's also in
9 attendance might keep their own notes, but mine would be
10 more related to the action items that I had from that
11 call if I owed materials or a language back to a company
12 what my responsibilities were so that I could ensure to
13 do those and get those back to that company.
14 Q. So if you were negotiating an issue as we've
15 talked about local traffic and what this exception
16 means, would you advise your contract negotiators to
17 just use red-lined versions and not send back perhaps
18 e-mails saying here's what we talked about, here's what
19 we agreed to, do you agree?
20 A. The hope is that the language embodies what the
21 parties agreed to. There could be times when you're
22 having discussions around something that would be a
23 resulting note or summary like that but not necessarily
24 always in the course of business.

1 Q. Did you review the notes produced by Roberta
2 Stevens in this proceeding?
3 A. I have reviewed those very cursorily when we were
4 in your offices for the deposition. I have not reviewed
5 them in depth.
6 Q. Why not?
7 A. Again, we -- I went through and looked for
8 anything that looked like it related to local traffic or
9 the issues in this case.
10 Q. Well, if the notes were only cursorily reviewed by
11 you why did you ask for them?
12 A. Mr. Shore looked at them as well. I mean, both --
13 we both had an interest in looking at those.
14 Q. So you don't -- having looked at them do you have
15 an opinion about the quality and completeness of her
16 notes?
17 A. I'm not sure. If you want to ask me a specific
18 question --
19 Q. (Interposing) You were in the negotiations. She
20 took notes. When you looked at her notes did they
21 appear to be complete or incomplete?
22 A. Again, they appeared to outline perhaps action
23 items, open things, they did not have every issue that
24 was discussed by any means.

Q. Okay. Let's move to another topic. Let's talk more specifically about the negotiations between the parties in this particular situation. Now what exactly was your role in the North Carolina negotiations when you arrived on the scene in May of 2001?

A. Well, prior to North Carolina, the parties had -- were still dealing with some other states and finishing that up. When we started talking about North Carolina, my role again was as the attachment 3 subject matter spokesperson for BellSouth to talk about those issues and try to resolve any issues that the parties were still negotiating.

Q. What issues?

A. At that point we were negotiating several things: Point of interconnection was one of the arbitration issues that BellSouth and AT&T negotiated and continued to negotiate even after the arbitrations were filed and the hearings were held; compensation for what's called "trunks in facilities" in the industry with an issue that we continue to negotiate; the definition of local traffic obviously we continued to negotiate; the Voice Over IP provisions that was in arbitration that the parties continued to negotiate; and then there were other, you know, of course, a negotiation for the

1 language changes that were made. But those issues were
2 large issues. Also, after the FCC's ISP Order on Remand
3 came out, the parties negotiated about that issue.
4 Q. So you were an expert in all of those issues? You
5 were a subject matter expert in all of those issues you
6 just mentioned?
7 A. Yes, for local interconnection.
8 Q. Are you a trunking expert?
9 A. No.
10 Q. In fact, you admitted to me in your deposition
11 that you don't know that much about trunks, right?
12 A. Well, I'm familiar with trunking and how it works.
13 But within BellSouth we do have other people that if the
14 negotiations called for a need for someone who is an
15 expert on something that they would be brought in.
16 Q. And you told me in your deposition that you relied
17 on other people at BellSouth to help you understand the
18 network, right?
19 A. I believe your question to me was in learning
20 about the network and things like that. But, yes, if a
21 question comes up that I don't know the answer to,
22 obviously yes, I go to someone else who is responsible
23 for that at BellSouth to find out the answer for the
24 CLEC.

1 Q. Okay. And did you not tell me in your deposition
2 that when you became involved in the North Carolina
3 negotiations that you were not familiar with AT&T's
4 network?
5 A. Correct. Yeah, we deal, obviously again, with 450
6 CLPs and we're not -- I don't know the network
7 architecture of each of them.
8 Q. Okay. Just a few more questions about what you
9 advise your interconnection negotiators to do. Would
10 you ever advise them to file testimony in a proceeding
11 that involves an issue in dispute and an interconnection
12 agreement without checking that interconnection
13 agreement to see if the term in dispute is defined.
14 A. That's a fairly specific question. I don't know
15 if someone came and asked me that specific question how
16 I would answer. That's not something that typically
17 comes up in the course of my job.
18 Q. Well, in your deposition, I asked you before you'd
19 filed any testimony in this proceeding if you had
20 checked the contract to see if there was a definition of
21 switched access arrangements. Do you remember you told
22 me no you had not checked the contract?
23 A. I believe I told you that I did not think there
24 was, but I hadn't done a word search on the entire

1 agreement.
2 Q. Okay. Now, at the time that you became involved
3 in the AT&T negotiations in May of 2001, did you ask for
4 a briefing from anybody at BellSouth what were hot
5 buttons or key issues to AT&T in these negotiations?
6 A. No. Obviously in picking up -- as this is a
7 transition -- as I was picking up this job, I talked
8 with the previous manager who had these responsibilities
9 and we talked about open issues and where things were.
10 But I did not ask for quote, hot issues or hot buttons.
11 Q. And who was that manager that you had the
12 transition discussions with?
13 A. Tim Watts (spelling uncertain) had the position
14 prior to me.
15 Q. Did you talk with him about the definition of
16 local traffic?
17 A. I don't specifically remember if we talked before
18 that or not. Again, that -- I don't recall.
19 Q. Did you review AT&T's arbitration petition?
20 A. I don't know if I did prior to us starting to
21 negotiate on it.
22 Q. And is this the way -- is this the kind of advice
23 you would give your contract negotiators to pick up in
24 the middle of a negotiation and not review a petition or

1 not ask for a briefing?
2 A. Again, where we started from was a document and
3 that's what I asked for input on. Again, the parties
4 have talked a lot about the red lines that go back and
5 forth. At the point in which I took over, obviously, I
6 obtained the latest red line, looked through what the
7 issues were, what was open, what wasn't, and that would
8 be where the discussion centered from.
9 Q. Uh huh. So at that point in time, when you came
10 on the scene, you'd know whether AT&T thought they had
11 agreed to a definition of local traffic with BellSouth,
12 didn't you?
13 A. Well, again, in looking at the document that was
14 not an arbitrated issue that had been filed previously
15 but we did continue to talk about that issue and then
16 BellSouth proposed the language in May of 2001.
17 Q. No. My question was: When you first came on the
18 scene, when you first got involved, you didn't know
19 whether local traffic was a significant issue, did you?
20 You hadn't reviewed the arbitration petition.
21 A. I was aware of the arbitration issues.
22 Q. And in the arbitration petition AT&T had not asked
23 to negotiate, I'm sorry, to arbitrate the definition of
24 local traffic, had it?

1 A. No, they had not.
2 Q. Now, in addition to working on the North Carolina
3 negotiations, you indicated in your deposition that you
4 also worked on the Mississippi negotiations, quote,
5 towards the end. Do you remember that?
6 A. Yes.
7 Q. And with respect to the Mississippi agreement, you
8 stated in your deposition that the definition of what
9 constituted local traffic had already been agreed to by
10 the time that you arrived on the scene. Do you remember
11 that?
12 A. Yes.
13 Q. I'd want to look at the Mississippi agreement.
14 Let me get a chart out.
15 COMMISSIONER ERVIN: Ms. Cecil, I don't see
16 any need to mark this since we've agreed to judicially
17 notice this document. Is that right?
18 MS. CECIL: That's correct. That's correct.
19 So this will be AT&T Cross Number 2.
20 COMMISSIONER ERVIN: Okay. If we want to mark
21 it that's fine.
22 MS. CECIL: That's great.
23 AT&T SHIROISHI CROSS EXHIBIT 2
24 IDENTIFIED

1 Q. (MS. CECIL) Can you see this, Ms. Shiroishi?
2 A. Yes.
3 Q. I'll represent to you that what we've shown on the
4 board here is the definition of local traffic which came
5 out of the Mississippi interconnection agreement. And I
6 think you agreed -- you indicated in your deposition
7 that this definition had already been agreed to by the
8 time you were involved in Mississippi, is that correct?
9 A. Again, the parties hadn't yet signed the
10 interconnection agreement. But, yeah, this issue, as I
11 believe Mr. Peacock talked about earlier, as you go
12 through you agree to issues as they come up and as they
13 are resolved. It's not -- obviously you can't wait
14 until the last minute and have one major session to do
15 every issue in an interconnection agreement. So, yeah,
16 the parties -- BellSouth had given its concurrence on
17 this language prior to my involvement.
18 Q. Okay. And in 6.1.1 it states: Local traffic
19 means any telephone call that originates and terminates
20 in the same LATA, correct?
21 A. Correct. Start here
22 Q. Now, the date of the Mississippi agreement was
23 March 28, 2001. That was before the FCC's Order on
24 Remand regarding ISP traffic, correct?

(8)

A. It was before it was effective but I believe it was released maybe in February.

Q. What did the Mississippi agreement say relative to how the parties were going to compensate each other for ISP traffic?

A. The parties agreed to compensate each other at the rates listed in 6.1.2 for ISP-bound traffic.

Q. And that was very different than what was agreed to in North Carolina, correct?

A. At what point agreed to in North Carolina?

Q. The July 19th agreement.

A. What was ultimately signed?

Q. Yes.

A. I'm not sure how you define different. I mean, in the North Carolina agreement signed in July, the parties also agreed to compensate each other at a single rate for ISP and local traffic, and in the Mississippi agreement.

Q. Well, in Mississippi, the parties basically agreed before the FCC's Order on Remand became effective to compensate ISP traffic as if it were local traffic at local rates as you've said in your deposition.

A. It's the same rates as local traffic, yes.

Q. Same rates. And relevant to North Carolina, what

1 did the parties agree to?
2 A. In the July agreement?
3 Q. Yes.
4 A. To compensate each other at the same rate for ISP
5 and local traffic. Well, actually they put in place
6 holder language which said we would implement FCC's ISP
7 Order on Remand which is -- that's one of the
8 alternatives set forth in that.
9 Q. And during the North Carolina negotiations, did
10 not the parties also agree that if the FCC subsequently
11 changes their mind about ISP traffic, the parties will
12 agree and comply with whatever the FCC subsequently
13 says. Isn't that correct?
14 A. I would have to look at that language. I believe
15 that's correct.
16 Q. And in Mississippi there wasn't any sort of
17 exclusion. The parties agreed that they were going to
18 compensate ISP traffic during the term of that agreement
19 at local rates regardless of what the FCC said, isn't
20 that correct?
21 A. At the same set of rates, yes.
22 Q. Okay. All right. So in other words, the issue
23 about ISP traffic in the Mississippi agreement was
24 pretty much over? Wouldn't you agree with that?

(10)

A. For Mississippi, yes.

Q. And in North Carolina it wasn't over. You were still negotiating it at the time you were talking about a new definition of local traffic. And you'd also agree that if the FCC changed its mind subsequently that that agreement will be changed as well, correct?

A. Again, yeah, I would need to look at that language. But, yes, that was an issue that the parties were still negotiating. [Tr. Vol 2, P 82-85]

Q. Okay. Now, what did you understand to be issues that could be negotiated after AT&T had filed its arbitration petition?

A. When I became involved in the negotiations?

Q. Yes.

A. I don't know that there were any rules around what could or couldn't be offered and discussed. Obviously, the parties had filed for arbitration to the extent that an arbitration issue was pending and the Commission had issued an order or would. The parties are bound by that unless they mutually agree to something else. So that was, I guess, one criteria. But either party could propose language to deal with something for the other party to review.

Q. Wouldn't you agree as a matter of just principle

1 that once an arbitration petition is filed, the parties
2 are not going to negotiate items, provisions that
3 they've already agreed to after the petition has been
4 filed?
5 A. Not necessarily. I've been involved in many
6 negotiations sessions. And one of the difficulties with
7 arbitration is that the process does take some time so
8 as that time evolves, the parties may decide, you know,
9 we didn't -- we agreed to this language but now we see
10 this out here that you've offered somebody else and we
11 think we would like to talk about that; that's not
12 uncommon at all. Given the time frame that we're
13 talking about here, I think the arbitration petition in
14 North Carolina was filed in early 2000, and we didn't
15 sign the agreement until July of 2001. So during that
16 time frame it's not uncommon for carriers, and I'm not
17 just speaking of AT&T, but for all carriers that we
18 negotiate with, to continue having discussion, again, to
19 the extent both parties agree. We are bound by the
20 arbitration issues that are filed and the Commission
21 orders unless the parties agree otherwise.
22 Q. Well now, having already received the definition
23 of LATA-wide as being local in the Mississippi
24 agreement, are you suggesting that AT&T would have

1 agreed to something less in North Carolina after the
2 arbitration petition was filed in North Carolina?
3 A. I can't speak to AT&T's intent. As Mr. Peacock
4 talked about earlier, the parties did agree to some
5 things in Mississippi that they didn't agree to do in
6 other states. The parties agreed, for purposes of not
7 wanting to arbitrate in that state, that we would do
8 some things there that we wouldn't agree to do in other
9 states. And so, again, I can't speak to AT&T's intent.
10 But for BellSouth, local traffic obviously was something
11 that we were willing to go with this language in
12 Mississippi, we weren't willing to do that in other
13 states.
14 Q. How do you know that?
15 A. Because BellSouth was not willing to stick with
16 the definition that you see here in Mississippi in other
17 states.
18 Q. Now, why did you agree to that definition in
19 Mississippi?
20 A. Again, I was not the person involved when that
21 decision was made and concurred in, but again, both
22 parties agreed to things and Mississippi agreed to
23 compromise on issues that they wouldn't in other states?
24 Q. Now, I asked you about this in your deposition and

1 you said, I was not involved in Mississippi when the
2 definition of local traffic was agreed to. Do you
3 remember that?
4 A. Uh huh.
5 Q. And I also asked you in discovery why the
6 Mississippi agreement was the Mississippi agreement. Do
7 you remember that?
8 A. Yes.
9 Q. Now what things did the parties agree to that made
10 Mississippi so different than North Carolina?
11 A. Well if we wanted to do a side-by-side comparison
12 of those agreements, we would see things there that were
13 agreed to compromise language that didn't appear as
14 arbitration issues, obviously, because we didn't
15 arbitrate. Off the top of my head, you know, we came up
16 with alternative solutions. I know that, for instance,
17 on Voice Over IP in Mississippi we basically just agreed
18 to language that said neither party is doing it at this
19 point in time so it's not an issue. We just agree under
20 this agreement not to do it. And if either party wanted
21 to start doing that we could request an amendment and
22 would handle it at that time.
23 Q. Let me stop you there because that's a good
24 example. Voice Over IP, you gave up your rights on that

1 issue in Mississippi by what you've just said. You were
2 wanting to have Voice Over IP treated as some type of
3 traffic, switched access traffic, correct?
4 A. But I haven't given up any rights if the party is
5 saying they're not going to do it. I mean, if I have a
6 company who's saying I'm not going to do this then it's
7 not an issue for me. And if the contract -- or
8 BellSouth I should say -- and if the contract says
9 you're got going to do it then, no, I haven't given up
10 any rights.
11 Q. So you're taking the position that AT&T agreed in
12 Mississippi not to transport any Voice Over IP traffic?
13 A. I don't have the language in front of me but if we
14 look at it basically -- I'm paraphrasing here -- it says
15 something like the parties agree that at this point in
16 time, and I don't know if it's mutual or if it just says
17 AT&T, but is not utilizing VOIP transmissions or it
18 might have said IP telephony transmissions in
19 Mississippi. And my recollection is that it says if at
20 any point they want to start doing it they'll request an
21 amendment and we'll negotiate it and handle it at that
22 point.
23 Q. So in Mississippi -- were there any other terms
24 that you felt were as valuable enough to balance out you

giving up a LATA-wide definition of local traffic?
A. Again, I wasn't involved in those negotiations so I couldn't speak for the balance that you're asking for there, but there were issues. Again, point of interconnection was an issue that was very, obviously important to both parties and was handled one way in Mississippi that I guess AT&T was okay with in the other states and so they arbitrated that issue.

COMMISSIONER ERVIN: Ms. Cecil, it's about 3:00 and I think we need to give the Court Reporter a break. So let's take a 10 minute recess and reconvene at 3:10 according to the clock on the back of the wall there.

WHEREUPON, this hearing was recessed.

CERTIFICATE

The undersigned Court Reporter certifies that this is the transcription of notes taken by her during this proceeding and that the same is true, accurate and correct.

Kim Mitchell
Court Reporter II
March 5, 2003

PLACE: Dobbs Building, Raleigh, North Carolina

DATE: Wednesday, January 22, 2003

DOCKET NO.: P-55, Sub 1376

TIME IN SESSION: 9:30 a.m. - 12:30 p.m.

BEFORE: Commissioner Sam J. Ervin, IV, Presiding
Commissioner J. Richard Conder
Commissioner Robert V. Owens, Jr.
Commissioner James Y. Kerr, II
Commissioner Michael S. Wilkins

IN THE MATTER OF:
Complaint of AT&T Communications of the Southern States, LLC, Teleport Communications Group, Inc. and TCG of the Carolinas, Inc. for enforcement of interconnection agreements with BellSouth Telecommunications, Inc.

VOLUME 1 of 3

A P P E A R A N C E S:

FOR BELLSOUTH TELECOMMUNICATIONS, INC.:

Edward L. Rankin, III
General Counsel - North Carolina
Post Office Box 30188
Charlotte, North Carolina 28230
and
Andrew D. Shore
Attorney at Law
675 West Peachtree St. N.E., Suite 4300
Atlanta, Georgia 30375

FOR THE AT&T COMPANIES:

Loretta A. Cecil
Womble, Carlyle, Sandridge & Rice
1201 West Peachtree Street, Suite 3500
Atlanta, Georgia 30309

FOR THE USING AND CONSUMING PUBLIC:

Robin Cauthen, Staff Attorney
Public Staff - N.C. Utilities Commission
4326 Mail Service Center
Raleigh, North Carolina 27699-4326

FLORIDA PUBLIC SERVICE COMMISSION
DOCKET NO. 020919-TP EXHIBIT NO. 9
COMPANY/ WITNESS: NCUC- Transcript
DATE: 5-07-03

I N D E X

	PAGE
JEFFREY A. KING	
Direct examination by Ms. Cecil	28
Cross-examination by Mr. Shore	74
Cross-examination by Mr. Cauthen	93
Redirect examination by Ms. Cecil	101
Examination by Commissioner Kerr	108
Recross-examination by Mr. Shore	111
ROBERTA STEVENS	
Direct examination by Ms. Cecil	114
Cross-examination by Mr. Shore	129
Redirect examination by Ms. Cecil	149
Examination by Commissioner Ervin	157
BILLY C. PEACOCK	
Direct examination by Ms. Cecil	161
Cross-examination by Mr. Shore	195

E X H I B I T S I D E N T I F I E D

	PAGE
BellSouth Cross Exhibit Number 1	80
AT&T Redirect Exhibit 1	107
BellSouth Cross Exhibit Number 2	135
BellSouth Cross Exhibit Number 3	139
BellSouth Cross Exhibit Number 4	141
BellSouth Cross Exhibit Number 5	204
BellSouth Cross Exhibit Number 6	206
BellSouth Cross Exhibit Number 7	209

E X H I B I T S A D M I T T E D

	PAGE
BellSouth Cross Exhibits 1-4	160

1 COMMISSIONER ERVIN: Good morning. Let's come
2 on the record, please. I'm Commissioner Sam Ervin, IV
3 of the North Carolina Utilities Commission. I've been
4 assigned to preside over this hearing. With me are
5 Commissioners J. Richard Conder, Robert V. Owens, Jr.,
6 James Y. Kerr, II and Michael S. Wilkins.
7 I now call for hearing Docket Number P-55, Sub
8 1376 in which AT&T Communications of the Southern
9 States, LLC, Teleport Communications Group, Inc. and TCG
10 of the Carolinas, Inc. have filed a complaint against
11 BellSouth Telecommunications, Inc. alleging that
12 BellSouth has violated the provisions of the relevant
13 interconnection agreement concerning the treatment of
14 local traffic.
15 On August 26th, 2002 AT&T, Teleport and TCG
16 filed a complaint in which they alleged that BellSouth
17 has violated and is violating its alleged obligation to
18 charge AT&T, Teleport and TCG at reciprocal compensation
19 rates for the transport and termination of local traffic
20 in accordance with the LATAwide definition of such
21 traffic set out in the interconnection agreement between
22 AT&T, Teleport and TCG on the one hand and BellSouth on
23 the other hand and requested the Commission to construe
24 the relevant interconnection agreement in the manner

1 contended for by AT&T, Teleport and TCG, to order
2 BellSouth to issue certain credits plus appropriate
3 interest to AT&T, Teleport and TCG and to order
4 BellSouth to charge AT&T, Teleport and TCG for such
5 traffic at the allegedly appropriate reciprocal
6 compensation rate on a going-forward basis.
7 On September 16, 2002 BellSouth filed an
8 answer to the complaint of AT&T, Teleport and TCG in
9 which BellSouth denied the material allegations of the
10 complaint, requested the Commission to construe the
11 relevant interconnection agreement in the manner
12 contended for by BellSouth and asked the Commission to
13 refuse the order of relief -- order of the relief
14 requested by AT&T, Teleport and TCG.
15 On September 24, 2002 AT&T, Teleport and TCG
16 filed a statement with the Commission indicating that
17 BellSouth's answer was not satisfactory and requesting
18 that the complaint be set for public hearing. On
19 October 14, 2002 the Commission entered an order setting
20 hearing in which the Commission set this matter for
21 hearing at this time and place, established dates for
22 the submission of prefiled testimony, required the
23 parties to file preferred orders of witnesses and
24 cross-examination estimates and requested the Public

1 Staff of the North Carolina Utilities Commission to
2 actively participate in this proceeding.
3 On November 26th, 2002 AT&T, Teleport and TCG
4 filed the testimony and exhibits of Jeffrey A. King. On
5 December 18, 2002 BellSouth filed the testimony and
6 exhibit of Beth A. Shiroishi. And I apologize if I
7 butchered her name. On January 17, 2003 AT&T, Teleport
8 and TCG filed the rebuttal testimony and exhibits of
9 Mr. King, Billy C. Peacock and Roberta Stevens.
10 On December 30, 2002 AT&T, Teleport and TCG
11 filed a motion to strike BellSouth's quote, extrinsic,
12 closed quote, testimony or, in the alternative, motion
13 for additional time to conduct discovery, file rebuttal
14 testimony and extend hearing date in which AT&T,
15 Teleport and TCG requested the Commission to strike
16 certain portions of Miss Shiroishi's prefiled testimony
17 on the grounds that it contained material that was
18 inadmissible under the Parol Evidence Rule or,
19 alternatively, to modify certain provisions of the
20 Commission's procedural order.
21 On January 3, 2003 BellSouth filed a response
22 to AT&T's spurious motions in which BellSouth urged the
23 Commission to deny all the relief requested by AT&T,
24 Teleport and TCG. On January 7, 2003 the Commission

1 entered an order denying motion to strike but allowing
2 brief discovery in which the Commission declined to
3 strike any of Miss Shiroishi's prefiled testimony,
4 allowed AT&T, Teleport and TCG to take additional
5 discovery and extended the time for the filing of
6 rebuttal testimony.
7 On January 21, 2003 AT&T, Teleport and TCG
8 filed a renewed motion to strike BellSouth's extrinsic
9 testimony and supporting brief in which they renewed
10 their request that certain portions of the prefiled
11 testimony of Miss Shiroishi be stricken under the Parol
12 Evidence Rule.
13 October 16, 2002 the Public Staff filed a
14 notice of intervention. The intervention and
15 participation of the Public Staff is recognized pursuant
16 to G.S. 62-15(d) and Commission Rule R1-19(e). No party
17 has formally petitioned to intervene and participate in
18 this proceeding.
19 I now call for the appearances of counsel,
20 beginning with the complainant.
21 MS. CECIL: Good morning, Commissioner. I'm
22 Loretta Cecil with the firm of Womble, Carlyle,
23 Sandridge & Rice appearing on behalf of the AT&T
24 companies in this proceeding.

1 MR. RANKIN: Good morning, Commissioners. Ed
2 Rankin and Andrew Shore appearing on behalf of BellSouth
3 Telecommunications.
4 MR. CAUTHEN: Robert B. Cauthen, Jr., staff
5 attorney with the Public Staff, appearing on behalf of
6 the using and consuming public.
7 COMMISSIONER ERVIN: All right. Are there any
8 preliminary matters that need to be addressed before the
9 beginning of the hearing except dealing with the renewed
10 motion to strike?
11 MS. CECIL: Yes, Commissioner. BellSouth and
12 AT&T have agreed that the Commission should take
13 judicial notice of the two North Carolina
14 interconnection agreements that have been identified in
15 AT&T's complaint. We've also agreed that we would like
16 the Commission to take judicial notice of the
17 Mississippi interconnection agreement which is currently
18 in effect between the parties and is referenced in the
19 testimony of various witnesses in this proceeding.
20 COMMISSIONER ERVIN: All right. And we'll
21 take judicial notice of all three of those
22 interconnection agreements. I believe we talked about
23 two North Carolinas and one Mississippi?
24 MS. CECIL: Yes, sir.

COMMISSIONER ERVIN: We have copies, in our files, of the two North Carolinas and so I don't believe we need to clutter up the record with further copies of those documents. But as I believe we discussed prior to the beginning of the hearing, it's my understanding that the parties will jointly provide us with a copy of the Mississippi interconnection agreement and I will request y'all to make sure that you've agreed on what is, in fact, a true and accurate copy of that document and submit it to us jointly. Subject to that understanding, the Commission will judicially notice all three of those interconnection agreements.

MR. SHORE: The only other outstanding issue in that regard was we had agreed that we would submit the depositions of all four of the witnesses that will testify here today and the transcripts from those depositions as well as the exhibits into the record of this proceeding, if the Commission will allow us to do that.

COMMISSIONER ERVIN: Is it my understanding that the depositions of those witnesses will be treated as evidence that the Commission can consider in reaching its decision?

MS. CECIL: Yes, that's the agreement of the

1 parties.

2 COMMISSIONER ERVIN: All right. And those

3 would be the depositions of Mr. King, Mr. Peacock, Miss

4 Stevens and Miss Shiroishi?

5 MR. SHORE: That's correct.

6 MS. CECIL: That's correct.

7 COMMISSIONER ERVIN: And you will file those,

8 presumably, at some reasonably prompt time?

9 MR. SHORE: Absolutely.

10 COMMISSIONER ERVIN: All right. Well, those

11 depositions will be received into evidence pursuant to

12 the stipulation of the parties without objection.

13 Mr. Cauthen, do you have any problem with that?

14 MR. CAUTHEN: No.

15 COMMISSIONER ERVIN: All right. Is there

16 anything else other than the motion to strike?

17 MS. CECIL: Commissioner, we also agreed that

18 the hearing boards would be stipulated by the parties.

19 BellSouth has had an opportunity to look at ours and

20 Mr. Shore assures me that his boards are contract

21 language as well that we've already seen, so we've

22 stipulated to the boards for purposes of the hearing.

23 COMMISSIONER ERVIN: All right. Well, I had

24 assumed that those would be used for illustrative

1 purposes by one or more of the witnesses and so we'll
2 certainly receive those into evidence at the appropriate
3 time. All right. Is there anything else?
4 MR. SHORE: Not from BellSouth.
5 COMMISSIONER ERVIN: With respect to the
6 renewed motion to strike, does anybody wish to be heard
7 further with respect to that motion?
8 MS. CECIL: Yes, Commissioner, I'd like to be
9 heard.
10 COMMISSIONER ERVIN: All right. Miss Cecil.
11 MS. CECIL: Commissioner, this is a breach of
12 contract case. And the contract in question contains an
13 entire agreement clause. The contract in question is
14 governed by Georgia law. And the brief that we've filed
15 indicates that clearly under Georgia statutes, parol
16 evidence, extrinsic evidence is not allowed when you
17 have an entire agreement or a merger clause unless there
18 is a prior finding of ambiguity by the Court and after
19 that finding of ambiguity, there is no other way to
20 construe the contract without taking into consideration
21 parol evidence.
22 Even if parol evidence is allowed, after a
23 finding of ambiguity and after construction under the
24 statutes, parol evidence cannot be used and cannot be

1 considered by the Court or the Commission in this case
2 to vary the terms of the agreement. And we take the
3 position that the testimony of Miss Shiroishi, in large
4 measure, is parol evidence that should not be admitted
5 until there is a finding of, number one, ambiguity;
6 number two, construction of the contract; and number
7 three, a finding that that testimony does not vary the
8 terms of the contract that was entered into by the
9 parties.
10 And with that, we would leave it to the good
11 judgment of the Commission to so rule on that motion.
12 COMMISSIONER ERVIN: You may be overestimating
13 the presiding Commissioner in that respect. Mr. Shore,
14 Mr. Rankin, do you wish to be heard on that point?
15 MR. SHORE: Just very briefly. One procedural
16 objection. Under Commission Rule 1-24 I believe it is
17 that motions to strike are to be filed five days prior
18 to the hearing. I don't believe that's the case with
19 this renewed motion. We note that.
20 Secondly, we'd just incorporate the arguments
21 we made in our response to the original motion. As I
22 understand it, the motion objects to what they call
23 intent testimony. Under Georgia law and the governing
24 statute in Georgia I believe AT&T cites in their papers,

1 the cardinal rule of contract construction is to
2 ascertain the intent of the parties.
3 COMMISSIONER ERVIN: All right. I thank the
4 parties for their arguments and will, at this time, make
5 the following ruling -- and let me preface my ruling by
6 saying that under the procedures followed by the
7 Commission, the presiding Commissioner has the
8 responsibility for making rulings on evidence at this
9 point. And the ruling that I make is a ruling that the
10 presiding Commissioner makes with respect to evidence
11 and is not a final determination by the Commission with
12 respect to this question on the merits. So let me make
13 that distinction up front and but so that we'll be clear
14 as to what's going on here.
15 Subject to that understanding, I make the
16 following ruling with respect to the renewed motion to
17 strike: First of all, given that this motion is a
18 renewed motion to strike and given that G.S. 62-80
19 authorizes the Commission at any time to reconsider its
20 prior decisions -- I understand your argument,
21 Mr. Shore, with respect to our five-day rule, but given
22 that a previous motion to strike made prior to the
23 expiration of the five-day limit was made, I'm going to
24 treat this as a motion to reconsider our prior order so

1 that I don't believe the five-day rule justifies a
2 denial of the motion.
3 Secondly, I don't believe that all of the
4 testimony that's the subject of the motion to strike is
5 properly characterized as extrinsic evidence under the
6 Parol Evidence Rule as I understand it. More
7 particularly, I don't believe that the testimony that
8 appears at page 3, lines 13 through 15; page 7, lines 1
9 through 6; and page 9, line 8 through page 10, line 20,
10 appears to me to call for the sort of extrinsic evidence
11 to which this Rule is directed, that instead those
12 portions of Miss Shiroishi's testimony appear to me to
13 state BellSouth's contentions concerning the proper
14 manner in which the language of the agreement ought to
15 be construed and it doesn't seem to me to rely on
16 material extrinsic to the language in the
17 interconnection agreement itself.
18 So for that reason, the motion to strike as
19 directed to those portions of the testimony of Miss
20 Shiroishi are denied for that reason. With respect to
21 the remaining portions of the testimony of Miss
22 Shiroishi to which the motion to strike is directed and,
23 as an alternative basis for denying the motion to strike
24 those portions of Miss Shiroishi's testimony listed

1 above, I make the following conclusions for the sole
2 purpose of ruling on the motions to strike and for no
3 other purpose: It's my understanding, after reviewing
4 the authorities that were cited in the pleadings and my
5 own familiarity gained from arduous work in the previous
6 U.S. LEC case in which a similar issue arose that the
7 Parol Evidence Rule, as it exists under Georgia law,
8 bars consideration of extrinsic evidence for the purpose
9 of varying or altering the meaning of a written
10 agreement.
11 I don't in any way, Miss Cecil, dispute your
12 general statement of what the law provides. And I'm not
13 going to repeat the general statement of law that you've
14 made because I think I broadly agree with it. Without
15 going into great detail, it's my understanding that
16 extrinsic evidence is admissible even in cases involving
17 contracts with merger or integration clauses such as the
18 present ones in the event that the language of the
19 contract in question, examined solely on the basis of
20 the relevant contractual language and without reference
21 to any extrinsic evidence, is ambiguous.
22 After reviewing the pleadings, the original
23 motion to strike, the response filed by BellSouth, the
24 renewed motion to strike and after listening to the

1 arguments of the parties presented this morning, I
2 conclude, for the sole purpose of ruling on the present
3 renewed motion to strike, that the relevant contract
4 language is sufficiently ambiguous to permit the
5 introduction of extrinsic evidence and reach this
6 conclusion for at least two reasons: First, although
7 the term "switched access traffic" is a defined term in
8 the interconnection agreement, that exact term does not
9 appear to me to be the one used in the definition of
10 local traffic that lies at the heart of the present
11 dispute.
12 In addition, the term "switched access
13 arrangement," which does appear in the definition of
14 local traffic, is not capitalized. The relevant
15 language in the definition section of the
16 interconnection agreements attached to the complaint
17 indicates that the defined terms have the meaning set
18 out in the definitions section only when the term in
19 question is capitalized.
20 On the other hand, the definition of switched
21 access traffic upon which the AT&T companies rely does
22 expressly refer to the section containing the definition
23 of local traffic that appears to be at the heart of this
24 dispute. As a result, I conclude that this

1 inconsistency alone suggests that there is a sufficient
2 ambiguity arising solely from the language of the
3 contract itself to permit the introduction of extrinsic
4 evidence.
5 Secondly, the definition of local traffic
6 found in the interconnection agreements speak solely in
7 terms of intraLATA traffic. On the other hand, the
8 definition of switched access traffic found elsewhere in
9 the interconnection agreements speak solely in terms of
10 interLATA traffic. The inconsistency between the
11 definition of switched access traffic in the context in
12 which the AT&T companies contend that this definition
13 should be deemed to have been used creates a further
14 basis, at least in my mind, for concluding that the
15 relevant language in the interconnection agreement is
16 ambiguous.
17 Thus, for both of these reasons, I conclude,
18 at least for purposes of determining the admissibility
19 of evidence and for no other purposes, that there's
20 sufficient ambiguity arising solely from an examination
21 of the language of the contract, that the extrinsic
22 evidence of the type that's the subject of the motion is
23 admissible and, therefore, I'm going to overrule the
24 motion to strike.

1 To save time later, Miss Cecil, I understand
2 at least part of your reason for renewing the motion is
3 to make sure that you've got the right to complain about
4 my ruling in further venues. And that's certainly an
5 appropriate thing to do. I'm going to further rule that
6 you -- that the -- any decision that I make to admit
7 Miss Shiroishi's testimony upon motion of Mr. Rankin or
8 Mr. Shore is subject to your objection and that an
9 objection that you make at that time is overruled on the
10 basis of the ruling that I've just made.
11 MS. CECIL: Okay.
12 COMMISSIONER ERVIN: And further that your
13 introduction of the rebuttal testimony of Mr. King,
14 Mr. Peacock and Miss Stevens, that that testimony is
15 proffered also subject to this ruling.
16 MS. CECIL: Thank you.
17 COMMISSIONER ERVIN: I hope that does enough
18 to address the concern that you've raised with me
19 previously.
20 MS. CECIL: It does.
21 COMMISSIONER ERVIN: And again, I also
22 indicate that this is solely an evidentiary ruling, that
23 the parties are free to brief the ambiguity question for
24 purposes of the ultimate outcome on the merits at a

later time.

I don't have the ability to speak for my colleagues in terms of the merits and so this is still fair game for purposes of subsequent briefing. I understand that there's some question in the authorities about the extent -- I mean, how you deal with this as a matter of evidence law and how you deal with it as a matter of substance. And the substance is still fair game in this case. So with that, the motion is denied.

At this point, I believe the next order of business is for the opening statements that I had indicated that I would allow. And I believe, Miss Cecil, since you have the burden of proof as the complainant, I believe the floor is yours.

MS. CECIL: Good morning, Commissioners. On behalf of AT&T, we want to thank you for your time and attention this morning. And I've got some good news for you. This is not going to be the typical slug fest between BellSouth and AT&T on a policy matter.

This is a new case. This is a breach of contract case; and to that extent, it's going to require you to play judge more than you generally play when you're involved in the policy cases. I think, as Commissioner Ervin has just indicated, you're going to

1 be making some decisions about what the parties intended
2 based on this evidentiary ruling. And whenever you get
3 to play jury in that situation, you sort of have to look
4 at the case a little bit differently than you do from a
5 policy perspective.
6 I'm going to talk about the substance of the
7 case in a few minutes; but before I do that, I'd like to
8 also ask you, as you look at these jury-type questions
9 and who shot John and what are the facts and what was
10 the real intent of the parties, to think about the
11 credibility of the witnesses, to think about whether the
12 events, as they have been described in the testimony,
13 make common sense, whether it would make sense for a
14 company like AT&T to think that it had an agreement on
15 what was going to be the definition of local traffic and
16 then not arbitrate that issue and then, within a matter
17 of a short period of time after the agreement is entered
18 into, to find out from BellSouth that they did not have
19 an agreement on the definition of local traffic.
20 As you hear the evidence, there are going to
21 be many other things that you're going to sit there and
22 think, well, gee, does that really make sense? Would
23 parties of this caliber, of this contracting caliber, of
24 this history between each other really come to some

1 misunderstanding? We believe that the answer that you
2 will come to that is no. We believe that the answer you
3 will come to is that there was an appropriate definition
4 of local traffic in the interconnection agreement.
5 Now, as Commissioner Ervin has already
6 indicated, there are basically two sections of the
7 contract that we're going to be having to look at during
8 this proceeding. And we've put them up on easel boards
9 for you and we've underlined, in red, what appear to be
10 the disputed language. You'll see that -- in attachment
11 three, the section 5.3.1.1, which you'll hear a lot
12 about during the proceeding -- there's language at the
13 bottom that the parties agree to apply a LATAwide local
14 competition -- a LATAwide local concept to this
15 attachment three, meaning that traffic that has been --
16 traditionally been treated as intraLATA toll will now be
17 treated as local interconnection -- for interconnection
18 compensation purposes except for those calls that are
19 originated or terminated through switched access
20 arrangements established by the State Commission or the
21 FCC. That, evidently, is going to be the thorny
22 language that you're going to hear a lot about from the
23 parties as to what that language means.
24 The other language that Commissioner Ervin

1 pointed out, which we believe is going to be relevant,
2 is in section 5.3.3. These are both pieces of contract
3 language that appear in attachment three in the
4 interconnection agreement. And here there is clearly a
5 definition of switched access traffic that is not, in
6 any form or fashion, related to intraLATA or within the
7 LATA traffic. And then it's kind of difficult to see,
8 but here at the bottom (indicating) you'll see that
9 there's an indication that this section, which has a
10 definition of switched access traffic, is interrelated
11 to the other section that established the definition of
12 local traffic.
13 Now, why in the heck is this such an important
14 issue? Well, we all know that local traffic is
15 compensated at local compensation rates and that,
16 generally, if it goes into a local bucket that is going
17 to be transported, it's going to be terminated by the
18 parties at a lower rate. If it goes into the switched
19 access bucket or the switched access arrangement bucket,
20 then it's going to be paid for at a higher price. So
21 we're talking about dollars and cents here. That's what
22 this dispute relates to.
23 And as you'll see, in North Carolina BellSouth
24 has stipulated, we agree, there are 7 LATAs, local area

1 transport areas. So when the parties talked about over
2 in this particular paragraph (indicating) of adopting a
3 LATAwide local concept, a LATAwide local concept, what
4 they were agreeing is that within LATA 424, for example,
5 that that was going to be considered a local call that
6 would be transported at local rates and not at higher
7 switched access rates.
8 Now, the parties agreed that if there was a
9 call that went from LATA 424 over to LATA 422 or to LATA
10 420 that those would be switched access calls and they
11 would be paid for at a higher rate. That's what this
12 dispute and that's what this contract breach claim is
13 all about, what did the parties agree to relative to the
14 definition of local traffic, how does the contract fit
15 together and how does it relate to this particular map.
16 This is one of the most important maps in the proceeding
17 that you're going to be hearing about today.
18 Now, in my last minute or so I just want to
19 ask you again for some tolerance and patience as we talk
20 to the witnesses about events that transpired, as we
21 question the witnesses about their memory. And I would
22 ask you to be particularly mindful of the fact that most
23 of the documents that you're going to see recording
24 events, discussions of the parties, they're going to

1 come from AT&T. You're not going to have hardly any
2 documents from BellSouth that will indicate what they
3 believe to be the case. You're not going to see
4 documents from BellSouth that come back to AT&T saying,
5 here's what we believe the definition of local traffic
6 is.
7 The documentary evidence, the weight of the
8 documentary evidence is on this side (indicating) of the
9 room. It is not on that side of the room. And I would
10 just ask for you to bear that in mind as you evaluate
11 the evidence and you look to the credibility of the
12 witnesses. I think at the end of the day you will agree
13 that the contract was clear and BellSouth has breached
14 it. Thank you.
15 COMMISSIONER ERVIN: BellSouth.
16 MR. SHORE: I don't think I can agree to use
17 her version. Get us off to a bad start. Good morning,
18 Commissioners. It's good, as always, to be home here in
19 North Carolina. You'll recall, probably with not too
20 much fondness, the last time Miss Cecil and I were here
21 together was in the UNE case a couple months ago.
22 COMMISSIONER ERVIN: That was one of the
23 happiest moments of my life, Mr. Shore.
24 MR. SHORE: Thank you. That case, you'll

1 recall, involves highly complicated and technical
2 issues. This case, I'm happy to tell you and I hope
3 you're happy to hear, at least from BellSouth's
4 perspective, is just the opposite. In this case we're
5 asking you only to apply your common sense in
6 determining what one sentence in the parties'
7 interconnection agreement means.
8 And that sentence is right here (indicating).
9 The parties agree to a LATAwide local concept to this
10 attachment 3, meaning the traffic that has traditionally
11 been treated as intraLATA toll will now be treated as
12 local except -- now, that's the important part -- except
13 for those calls that are originated or terminated
14 through switched access arrangements as established by
15 the State Commission or the FCC. And the question that
16 you're going to have to answer at end of this case is
17 simple: Does that contract really mean what it says?
18 That is, are calls that are originated or
19 terminated through switched access arrangements,
20 intraLATA calls, to be treated as local. BellSouth says
21 yes. BellSouth says that's exactly what that sentence
22 says. AT&T, on the other hand, contends that just the
23 opposite is true, that the contract doesn't mean what it
24 says. AT&T's position is that all calls within the

1 LATA, including those that traverse switched access
2 arrangements, are within the definition of local traffic
3 in this agreement.
4 In other words, it's AT&T's position that no
5 LATAwide calls are exempted from the definition of local
6 traffic. Ask yourselves in deciding this case, is that
7 what the contract says? AT&T has a lot of motivation,
8 as Miss Cecil alluded to, to convince you that the
9 contract doesn't mean what it says because if you delete
10 this express exclusion from the contract, AT&T's
11 payments that it's required to make to BellSouth
12 pursuant to this contract will be drastically reduced.
13 The difference amounts to about $2 million a year. And
14 this is a three-year contract.
15 With that type of incentive and as smart as
16 Miss Cecil and her clients are, it's not surprising to
17 me that they've come up with some really creative and
18 inventive arguments to try to convince you that this
19 contract doesn't mean exactly what it says. The fact
20 is, though, and the testimony will show, that none of
21 their theories make sense. What makes sense is that the
22 parties put that except clause in the contract for a
23 reason. The reason was to exclude switched access
24 arrangement calls, interLATA calls from the definition

1 of local traffic.

2 BellSouth's witness in this case is Beth

3 Shiroishi. That's Miss Shiroishi sitting right over

4 there (indicating). This is her first time appearing

5 here before you. So I want to introduce her to you and

6 probably embarrass her a little bit in the process.

7 Miss Shiroishi, as I'm sure she can tell you, it is

8 obvious, is a lot younger than most of the witnesses

9 that typically appear before you in regulatory

10 proceedings. And she hasn't been with BellSouth since

11 the day that AT&T owned BellSouth and all the RBOCs.

12 But as you'll see when she takes the stand,

13 Miss Shiroishi is very knowledgeable about local

14 interconnection issues and the issues in this case. In

15 fact, I'd venture to say she's the person that I know

16 that knows the most about local interconnection. And I

17 hope you tell Jerry Hendricks that when he's up here

18 next time. More importantly, for purposes of this case,

19 than Miss Shiroishi's general knowledge and her numerous

20 promotions through the ranks at BellSouth is the fact

21 that she's the person at BellSouth that proposed this

22 language to AT&T and she's the person at BellSouth that

23 negotiated this language with AT&T.

24 Her testimony is that she explained to AT&T

1 exactly what this exclusion meant; that it excluded,
2 from the definition of local traffic, interLATA calls
3 that traversed switched access arrangements before AT&T
4 agreed to that language and signed the agreement.
5 She'll tell you why AT&T's creative arguments don't make
6 sense and really why the contract means just what it
7 says.
8 Finally, as I think Commissioner Ervin noted a
9 few moments ago, AT&T has the burden in this case. Its
10 got the burden to make one of its arguments stick as to
11 why you shouldn't give effect to that except clause.
12 We'll show, through cross-examination and through Miss
13 Shiroishi's testimony, that AT&T's arguments that the
14 contract doesn't mean what it says just fall apart under
15 close scrutiny. I don't have time now to go through
16 each of those theories, but I hope to do so in closing
17 arguments if time permits. And we will certainly do so
18 in our post-hearing briefs.
19 I agree with Miss Cecil that AT&T has a lot
20 more documents that it might introduce in this case. I
21 disagree strongly that those documents -- and we'll show
22 that those documents -- support their theory. At the
23 end of this case we're going to ask you to apply your
24 common sense and make a ruling that that except clause

means exactly what it says. Thank you.

COMMISSIONER ERVIN: Thank you, Mr. Shore. Mr. Cauthen, do you wish to make an opening statement?

MR. CAUTHEN: No, sir.

COMMISSIONER ERVIN: All right. Miss Cecil, you may call your first witness.

MS. CECIL: Thank you, Commissioner. We call Jeffrey A. King, please.

COMMISSIONER ERVIN: All right. Mr. King, if you would come around and be sworn. Welcome back, I believe.

MR. KING: Good morning.

JEFFREY A. KING; Being first duly sworn, testified as follows:

DIRECT EXAMINATION BY MS. CECIL:

Q. Mr. King, would you state your name and business address for the Commission's record, please.

A. My name is Jeffrey A. King. My business address is 1200 Peachtree Street, Atlanta, Georgia 30309.

Q. Are you the same Jeffrey A. King who filed direct testimony of 18 pages, including two exhibits, on November the 26th, 2002?

A. Yes, ma'am.

Q. Do you have any changes to that direct testimony?

1 A. I do have a change to my exhibit, Exhibit 2, I
2 believe. And that will be getting passed out to the
3 parties. Exhibit 2 to my direct testimony identified
4 the -- the claim that AT&T has in this case for credits
5 and -- that begins in July '01 and it has been updated
6 from my originally-filed testimony which had been
7 established through August of 2002. It's now been
8 updated through October of 2002.
9 Q. Do you have any other changes to your direct
10 testimony?
11 A. No, ma'am.
12 Q. Did you also, Mr. King, on January the 17th, 2003
13 file 18 pages of rebuttal testimony, including one
14 exhibit?
15 A. Yes, I did.
16 Q. Do you have any changes to your rebuttal testimony
17 or exhibit?
18 A. No, I do not.
19 Q. If I asked you today the same questions which are
20 included in your direct and your rebuttal testimony,
21 would your answers be the same as included in that
22 testimony?
23 A. Yes, they would.
24 MS. CECIL: Commission, we would move for the

1 introduction of Mr. King's direct testimony, including
2 his two exhibits, as well as his rebuttal testimony,
3 including his one exhibit, into the record.
4 COMMISSIONER ERVIN: All right. Mr. King's
5 direct testimony and rebuttal testimony will be admitted
6 into evidence subject to the ruling on the motion to
7 strike that I made earlier.
8 (REPORTER'S NOTE: The prefiled direct and
9 rebuttal testimony of Jeffrey A. King will be reproduced
10 in the record at this point the same as if the questions
11 had been orally asked and the answers orally given from
12 the witness stand.)
13
14
15
16
17
18
19
20
21
22
23
24

31

AT&T COMMUNICATIONS OF THE SOUTHERN STATES, LLC,
TELEPORT COMMUNICATIONS GROUP, INC., AND
TCG OF THE CAROLINAS, INC.
DIRECT TESTIMONY OF JEFFREY A. KING
BEFORE THE NORTH CAROLINA UTILITIES COMMISSION
DOCKET NO.: P-55, Sub 1376
NOVEMBER 26, 2002

FILED
NOV 26 2002
Clerk's Office
N.C. Utilities Commission

Q. PLEASE STATE YOUR NAME, TITLE, AND BUSINESS ADDRESS.

A. My name is Jeffrey A. King. I am a District Manager in the Local Services & Access Management organization of AT&T Corp. ("AT&T"). My business address is 1200 Peachtree Street, N.E., Atlanta, Georgia 30309.

Q. FOR WHOM ARE YOU FILING TESTIMONY IN THIS PROCEEDING?

A. I am testifying on behalf of AT&T Communications of the Southern States, LLC, Teleport Communications Group, Inc., and TCG of the Carolinas, Inc. (collectively referred to as "AT&T").

Q. HAVE YOU PREVIOUSLY TESTIFIED IN OTHER REGULATORY PROCEEDINGS?

A. Yes. I previously filed testimony on behalf of AT&T regarding various cost and pricing issues with public service or utility commissions in Georgia, Florida, Tennessee, North Carolina, Louisiana, Alabama, Puerto Rico and before the Federal Communications Commission ("FCC").

Q. PLEASE PROVIDE A BRIEF DESCRIPTION OF YOUR EDUCATION AND EXPERIENCE.

A. I received a Bachelor of Arts degree in Business Administration with a concentration in Industrial Administration from the University of Kentucky in 1983. I joined AT&T's Access Information Management organization in April 1986 and worked developing and testing the ordering and inventory Access Capacity Management System for electronically interfacing "High Capacity" access orders with incumbent local exchange carriers ("ILECs"). In December 1992, I joined the Access Management organization and managed customer/supplier relations on interstate access price issues, including access charge impacts and tariff terms and conditions analysis, with BellSouth Telecommunications, Inc. ("BellSouth") and Sprint LTD. In addition, my responsibilities included ILEC cost study analysis. I began supporting AT&T's efforts to enter the local services market with the implementation of the Telecommunications Act of 1996. Since July 1998, my responsibilities have included analyzing ILEC costs and

recommending all cost-based prices charged by ILECs. My responsibilities also include managing the rates, terms and conditions of local interconnection agreement charges and access tariff charges that AT&T pays to ILECs in the nine-state BellSouth region.

Q. WHAT IS THE PURPOSE OF YOUR TESTIMONY?

A. My testimony supports AT&T's Complaint filed in this proceeding in which AT&T alleges that BellSouth has breached, and continues to breach, its obligation to charge AT&T local reciprocal compensation rates for the transport and termination of all "Local Traffic," including all "LATAwide Traffic," under two interconnection agreements entered into between AT&T and BellSouth pursuant to Section 251 of the Telecommunications Act of 1996, Pub. L. No. 104-104, 110 Stat. 56 ("Act") and approved by the North Carolina Utilities Commission ("Commission") under Section 252 of the Act.

Q. PLEASE DESCRIBE THESE INTERCONNECTION AGREEMENTS.

A. The first interconnection agreement was executed by AT&T and BellSouth and approved by the Commission on May 12, 1997, in Docket No. P-140, Sub 50 ("First Interconnection Agreement"). First Interconnection Agreement was effective April 28, 1997, and

was set to expire three years from its effective date of April 28, 1997, or April 28, 2000. However, there was a "retroactivity" provision included in Section 2.3 of First Interconnection Agreement ("Retroactivity Provision") which provided that in the event First Interconnection Agreement expired before AT&T and BellSouth had executed another "follow-on" or "second" interconnection agreement, or before the Commission had issued its arbitration order in a "follow-on" or "second" arbitration, that the terms subsequently agreed to by the Parties or so ordered by the Commission in any "follow-on" or "second" arbitration, would be "retroactive" to the day following expiration of First Interconnection Agreement. Thus, the terms of Second Interconnection Agreement apply to First Interconnection Agreement as of April 29, 2000. First Interconnection Agreement also provided that the terms, conditions, and prices of First Interconnection Agreement would remain in effect until the "follow-on" or "second" interconnection agreement became effective.

A second interconnection agreement was executed by AT&T and BellSouth and approved by the Commission on August 21, 2001 in Docket No. P-140, Sub 73 and P-646, Sub 7 ("Second Interconnection Agreement"). Second Interconnection Agreement applied to both AT&T of the Southern States, Inc. (predecessor to

1 AT&T of the Southern States, LLC) and TCG of the Carolinas, Inc.
2 Provisions (underlined) from both First and Second Interconnection
3 Agreements which are relevant to this proceeding are attached
4 hereto and incorporated herein by this reference as JAK Direct
5 Exhibit 1. AT&T requests that the Commission take judicial notice
6 of both First and Second Interconnection Agreements in their
7 entirety, including those provisions found in JAK Direct Exhibit 1.
8
9 Q. IN BELLSOUTH'S SEPTEMBER 16, 2002 ANSWER FILED IN THIS
10 PROCEEDING, DID BELLSOUTH DISPUTE THE EXISTENCE OF
11 FIRST AND SECOND INTERCONNECTION AGREEMENTS OR THE
12 RETROACTIVITY PROVISION OF FIRST INTERCONNECTION
13 AGREEMENT WHICH YOU DISCUSSED ABOVE?
14 A. No.
15
16 Q. HAS BELLSOUTH BREACHED THESE INTERCONNECTION
17 AGREEMENTS? IF SO, IN WHAT MANNER?
18
19 A. Yes. Second Interconnection Agreement (the terms of which apply
20 to First Interconnection Agreement as of April 29, 2000 by virtue of
21 the Retroactivity Provision of First Interconnection Agreement)
22 clearly provides that BellSouth and AT&T are to transport and
23 terminate each other's "Local Traffic" at the local reciprocal

compensation rates set forth in the Second Interconnection Agreement. With respect to defining "Local Traffic," Second Interconnection Agreement clearly provides that the parties agreed to apply a "LATAwide" concept thereto, meaning that ***all*** calls transported and terminated within a "LATA" ("LATAwide Traffic"), would be subject to the local reciprocal compensation rates set forth in Second Interconnection Agreement. However, BellSouth has refused to apply local reciprocal compensation rates to ***all*** "Local Traffic," including all "LATAwide Traffic," and instead has applied BellSouth's switched access rates to certain "Local Traffic."

Q. WHICH OF AT&T'S ALLEGATIONS DID BELLSOUTH ADMIT IN ITS SEPTEMBER 16, 2002 ANSWER?

A. As mentioned above, BellSouth admitted that AT&T and BellSouth had entered into First and Second Interconnection Agreements identified by AT&T in its Complaint, and that the Commission has jurisdiction to interpret these Interconnection Agreements, specifically including the allegations contained in AT&T's Complaint. BellSouth also admitted that Second Interconnection Agreement contained Attachment 3 (which includes Sections 5.3.1 and 5.3.3 thereof), as well as a Second Amendment (which includes Exhibit 1 and Section 5.3.1 thereof). Because these

various Sections in Attachment 3 and Second Amendment to Second Interconnection Agreement include the terms and conditions which require BellSouth to charge AT&T local reciprocal compensation rates for transporting and terminating all "Local Traffic," including all "LATAwide Traffic." I will discuss them further in my testimony.

Q. STARTING WITH THE FIRST SECTION MENTIONED ABOVE, WHAT DOES SECTION 5.3.1 OF ATTACHMENT 3 TO SECOND INTERCONNECTION AGREEMENT PROVIDE?

A. This Section provides that with respect to intercarrier compensation relative to transporting and terminating "Local Traffic," the Parties agreed " ...to a apply a "LATAwide" local concept, meaning that traffic that has traditionally been treated as intraLATA toll would now be treated as local for intercarrier compensation, except for those calls that are originated or terminated through switched access arrangements as established by the State Commission or FCC."

Q. WHAT DOES SECTION 5.3.3 OF ATTACHMENT 3 TO SECOND INTERCONNECTION AGREEMENT PROVIDE?

A. First, this Section clearly states that it is "interrelated" to Section 5.3.1 of Attachment 3 to Second Interconnection Agreement discussed above. Second, this Section provides the only definition of "Switched Access Traffic" found in Second Interconnection Agreement to which, by definition, switched access charges may apply. As provided in this Section, "Switched Access Traffic" is defined as " ... telephone calls requiring local transmission or switching services for the purpose of the origination or termination of Intrastate InterLATA and Interstate InterLATA traffic." Thus, by virtue of the "interrelatedness" of the definition of "Switched Access Traffic" as found in this Section 5.3.3 of Attachment 3 to Second Interconnection Agreement, to the "LATAwide" local concept language found in Section 5.3.1 of this same Attachment 3 to Second Interconnection Agreement, the language in Section 5.3.1 quoted above regarding " ... except those calls that are originated or terminated through switched access arrangements as established by the State Commission or FCC," clearly means Intrastate InterLATA calls (because these calls are subject to jurisdiction of the "State Commission") and Interstate InterLATA calls (because these calls are subject to the jurisdiction of the "FCC").

Q. WHAT DOES SECTION 5.3.3 OF EXHIBIT 1 TO SECOND

AMENDMENT TO SECOND INTERCONNECTION AGREEMENT PROVIDE?

A. This Section provides the local reciprocal compensation rates which apply to all "Local and ISP Traffic." These rates are as follows:

5.3.3.1 Commencing on July 1, 2001, and continuing until December 31, 2001, $.0015 per minute of use;

5.3.3.2 Commencing on January 1, 2002, and continuing until June 30, 2003, $.0010 per minute of use;

5.3.3.3 Commencing on July 1, 2003, and continuing until June 30, 2004, or until further FCC action (whichever is later), $.0007 per minute of use.

Q. WHICH OF AT&T'S ALLEGATIONS DID BELLSOUTH DENY IN ITS SEPTEMBER 16, 2002 ANSWER?

A. Despite the clear and unambiguous language discussed above in Sections 5.3.1 and 5.3.3 of Attachment 3 and in Section 5.3.3 of Exhibit 1 to Second Amendment to Second Interconnection Agreement, BellSouth denied that "Local Traffic," as that term is

used in Second Interconnection Agreement, includes ***all*** "LATAwide Traffic."

Q. DID BELLSOUTH RELY UPON ANY LANGUAGE IN SECOND INTERCONNECTION AGREEMENT TO SUPPORT ITS POSITION THAT THE LOCAL RECIPROCAL COMPENSATION RATES AGREED TO BY THE PARTIES IN SECOND INTERCONNECTION AGREEMENT DO NOT APPLY TO ALL "LOCAL TRAFFIC," INCLUDING ALL "LATAWIDE TRAFFIC?"

A. Yes, but the language relied upon by BellSouth when "read together" with other language in Second Interconnection Agreement does not mean what BellSouth alleges it means. Specifically, BellSouth clearly takes out of context language in Section 5.3.1 of Attachment 3 of Second Interconnection Agreement asserting that local reciprocal compensation rates do not apply to any "Local Traffic" which is transported and terminated through " ... switched access arrangements established by the State Commission or FCC." As the applicable language from this Section 5.3.1 follows, I have italicized the specific language which BellSouth takes out of context:

Additionally the parties agree to apply a "LATAwide" local

concept to this Attachment 3, meaning that traffic that has traditionally been treated as intraLATA toll traffic will now be treated as local for intercarrier compensation purposes, ***except those calls that are originated or terminated through switched access arrangements established by the State Commission or FCC.***

Q. WHAT SUPPORTS YOUR POSITION THAT BELLSOUTH HAS TAKEN OUT OF CONTEXT THE LANGUAGE IN SECTION 5.3.1 OF ATTACHMENT 3 OF SECOND INTERCONNECTION AGREEMENT?

A. As discussed above, Section 5.3.3 (which follows Section 5.3.1) of Attachment 3 to Second Interconnection Agreement, clearly defines "Switched Access Traffic" as being limited to "Intrastate InterLATA" and "Interstate InterLATA" calls and does not include other types of calls, including any "IntraLATA" or "LATAwide Traffic." Moreover, at the end of Section 5.3.3, there is clear language that Section 5.3.3 of Attachment 3 to Second Interconnection Agreement is "interrelated" to the prior Section 5.3.1 of Attachment 3 to Second Interconnection Agreement which establishes a "LATAwide" local concept for purposes of intercarrier compensation. Thus the language found in Section 5.3.1 of Attachment 3 to Second Interconnection Agreement which provides

" ... except those calls that are originated or terminated through switched access arrangements as established by the State Commission or FCC," tracks precisely the definition of "Switched Access Traffic" as found in Section 5.3.3 of Attachment 3 to Second Interconnection Agreement. Obviously, the " ... except those calls that are originated or terminated through switched access arrangements as established by the State Commission ... " means "Intrastate InterLATA" calls (over which the State Commission has jurisdiction) and the language " ... except those calls that are originated or terminated through switched access arrangements as established by the ... FCC" means "Interstate InterLATA calls (over which the FCC has jurisdiction).

Q. IS THERE OTHER SUPPORT FOR AT&T'S POSITION THAT BELLSOUTH HAS TAKEN OUT OF CONTEXT THE LANGUAGE FOUND IN SECTION 5.3.1 OF ATTACHMENT 3 TO SECOND INTERCONNECTION AGREEMENT REGARDING "EXCEPT THOSE CALLS THAT ARE ORIGINATED OR TERMINATED THROUGH SWITCHED ACCESS ARRANGEMENTS AS ESTABLISHED BY THE STATE COMMISSION OR FCC?"

A. Yes. By definition, switched access charges only can be charged for transporting and terminating "Switched Access Traffic." Again,

as discussed above, Section 5.3.3 of Attachment 3 of Second Interconnection Agreement, contains a very clear and unambiguous definition of "Switched Access Traffic." However, BellSouth completely ignores this explicit definition as well as the other language in Section 5.3.3 which specifically states that "[t]his Section [5.3.3] [definition of "Switched Access Traffic"] is interrelated to Section 5.3.1 ["LATAwide" local concept]. Thus, it could not be clearer that these two Sections are to be "read together." Yet despite this clear language, BellSouth totally ignores Section 5.3.3 and its definition of "Switched Access Traffic." In this respect, BellSouth clearly ignores that Second Interconnection Agreement's definition of "Switched Access Traffic" means that BellSouth's switched access rates only would apply to InterLATA calls—Intrastate and/or Interstate—but not calls that are "IntraLATA," "within the LATA, or "LATAwide Traffic." The applicable language from Section 5.3.3 follows. Again, for the Commission's convenience, I have italicized the applicable language ignored by BellSouth:

> ***Switched Access Traffic is defined as telephone calls requiring local transmission or switching service for the purpose of the origination or termination of Intrastate InterLATA and Interstate InterLATA traffic.*** Switched

1 Access Traffic includes, but is not limited to, the following
2 types of traffic: Feature group A, Feature Group B, Feature
3 Group D, toll free access (e.g. 800/877/888), 900 access,
4 and their successors. Additionally, if BellSouth or AT&T is
5 the other party's end user's presubscribed interexchange
6 carrier or if an end user uses BellSouth or AT&T as an
7 interexchange carrier on a 101XXXX basis, BellSouth or
8 AT&T will charge the other party the appropriate tariff
9 charges for originating switched access services... . ***This***
10 ***Section is interrelated to Section 5.3.1.***
11
12 Q. IS SECTION 5.3.3 OF ATTACHMENT 3 TO SECOND
13 INTERCONNECTION AGREEMENT THE ONLY PLACE IN THE
14 AGREEMENT WHERE "SWITCHED ACCESS TRAFFIC" IS
15 DEFINED EXPLICITEDLY?
16
17 A. Yes.
18
19 Q. DOES THIS DEFINITION OF "SWITCHED ACCESS TRAFFIC"
20 INCLUDE ANY INTRALATA OR "LATAWIDE TRAFFIC?"
21
22 A. Absolutely not. Rather, to the contrary the definition of "Switched
23 Access Traffic" as set forth in Section 5.3.3 in Attachment 3 to

Second Interconnection Agreement includes only "InterLATA" traffic and does not include any "IntraLATA" or "LATAwide Traffic."

Q. RELATIVE TO "SWITCHED ACCESS ARRANGEMENTS," IS THERE LANGUAGE IN SECOND INTERCONNECTION AGREEMENT WHICH PROVIDES THAT BELLSOUTH IS ENTITLED TO CHARGE AT&T SWITCHED ACCESS RATES, RATHER THAN LOCAL RECIPROCAL COMPENSATION RATES, FOR TRAFFIC TRANSPORTED AND TERMINATED THROUGH "SWITCHED ACCESS ARRANGEMENTS AS ESTABLISHED BY THE STATE COMMISSION OR FCC?"

A. No.

Q. IN BELLSOUTH'S SEPTEMBER 16, 2002 ANSWER, OTHER THAN DENYING LIABILITY GENERALLY, DID BELLSOUTH DISPUTE THE AMOUNT WHICH AT&T ALLEGED IT HAD BEEN OVERCHARGED BY BELLSOUTH FROM JULY 1, 2001 THROUGH MAY 31, 2002 FOR CERTAIN "LOCAL TRAFFIC," INCLUDING "LATAWIDE TRAFFIC?"

A. No.

46

Q. SINCE AT&T'S COMPLAINT WAS FILED, HAS BELLSOUTH CONTINUED TO OVERCHARGE AT&T FOR CERTAIN "LOCAL TRAFFIC," INCLUDING CERTAIN "LATAWIDE TRAFFIC?"

A. Yes.

Q. WHAT IS THE CURRENT AMOUNT WHICH BELLSOUTH OWES AT&T FOR SUCH OVERCHARGES?

A. Through August 2002, BellSouth has overcharged AT&T $2,364,247.00 for transporting and terminating all "Local Traffic," including certain "LATAwide Traffic." Regarding the specifics of this increased overcharged amount, attached hereto and incorporated by this reference is JAK Direct Exhibit 2 which updates Exhibit 4 to AT&T's Complaint. To the extent BellSouth continues to overcharge AT&T for transporting and terminating all "Local Traffic," JAK Direct Exhibit 2 will need to be updated at the time of the hearing in this proceeding. BellSouth also owes AT&T interest on all overcharged amounts at the rate of one and one half percent (1 and ½%) per month from July 1, 2001 until the date such overcharges are paid by BellSouth to AT&T.

Q. HOW DOES AT&T CHARGE BELLSOUTH FOR TRANSPORTING

AND TERMINATING BELLSOUTH'S "LOCAL TRAFFIC," INCLUDING ALL "LATAWIDE" TRAFFIC" UNDER SECOND INTERCONNECTION AGREEMENT?

A. AT&T charges BellSouth the local reciprocal compensation rates agreed to by the Parties and set forth in Section 5.3.1 of Exhibit 1 to Second Amendment to Second Interconnection Agreement, and not switched access rates, for all "Local Traffic" which AT&T transports and terminates for BellSouth. Specifically, having implemented the "LATAwide" concept for "Local Traffic" as required by Second Interconnection Agreement, AT&T charges BellSouth local reciprocal compensation rates for all "Local Traffic," including all "LATAwide Traffic."

Q. IS BELLSOUTH AWARE THAT AT&T CHARGES BELLSOUTH LOCAL RECIPROCAL COMPENSATION RATES, RATHER THAN SWITCHED ACCESS RATES, FOR ALL "LOCAL TRAFFIC," INCLUDING ALL BELLSOUTH "LATAWIDE TRAFFIC," WHILE BELLSOUTH REFUSES TO DO THE SAME FOR AT&T ON A RECIPROCAL BASIS?

A. Yes.

Q. HAS BELLSOUTH EVER OFFERED TO PAY AT&T SWITCHED ACCESS RATES, RATHER THAN LOCAL RECIPROCAL COMPENSATION RATES, FOR AT&T'S TRANSPORT AND TERMINATION OF BELLSOUTH'S "LOCAL TRAFFIC," INCLUDING ALL BELLSOUTH "LATAWIDE TRAFFIC?"

A. No. Once Second Interconnection Agreement was executed by AT&T and BellSouth, AT&T began updating its billing systems to charge BellSouth the local reciprocal compensation rates set forth in Second Interconnection Agreement for transporting and terminating all "Local Traffic," including all "LATAwide Traffic." AT&T's compliance specifically included providing a credit to BellSouth in order to fully comply with the obligations of the Parties under Second Interconnection Agreement to reciprocally charge each other the local compensation rates set for in Second Interconnection Agreement for the transport and termination of all "Local Traffic," including all "LATAwide Traffic."

Q. DOES THIS CONCLUDE YOUR TESTIMONY?

A. Yes.

Copy

49

FILED
JAN 17 2003
Clerk's Office
N.C. Utilities Commission

AT&T COMMUNICATIONS OF THE SOUTHERN STATES, LLC, TELEPORT COMMUNICATIONS GROUP, INC., AND TCG OF THE CAROLINAS, INC.

REBUTTAL TESTIMONY OF JEFFREY A. KING

BEFORE THE NORTH CAROLINA UTILITIES COMMISSION

DOCKET NO.: P-55, Sub 1376

JANUARY 17, 2003

Q. PLEASE STATE YOUR NAME, TITLE, AND BUSINESS ADDRESS.

A. My name is Jeffrey A. King. I am a District Manager in the Local Services & Access Management organization of AT&T Corp. ("AT&T"). My business address is 1200 Peachtree Street, N.E., Atlanta, Georgia 30309.

Q. FOR WHOM ARE YOU FILING TESTIMONY IN THIS PROCEEDING?

A. I am testifying on behalf of AT&T Communications of the Southern States, LLC, Teleport Communications Group, Inc., and TCG of the Carolinas, Inc. (collectively referred to as "AT&T").

Q. ARE YOU THE SAME JEFFREY A. KING WHO PREVIOUSLY FILED DIRECT TESTIMONY ON BEHALF OF AT&T IN THIS PROCEEDING ON NOVEMBER 26, 2002?

SD

A. Yes.

Q. WHAT IS THE PURPOSE OF YOUR TESTIMONY?

A. My testimony responds to the Direct Testimony filed by Elizabeth R. A. Shiroishi on December 18, 2002, particularly regarding discussions I had with Billy C. Peacock, AT&T's lead contract negotiator, regarding BellSouth's intent in proposing certain language regarding what constituted "Local Traffic" in Second Interconnection Agreement. I also respond to Ms. Shiroishi's testimony where she implies that AT&T is required to transport all "Local Traffic" over "local interconnection trunks under Second Interconnection Agreement."

Q. AT PAGE 4, LINES 3-5, MS. SHIROISHI TESTIFIES THAT YOU WERE NOT A PART OF THE INTERCONNECTION NEGOTIATIONS BETWEEN AT&T AND BELLSOUTH. IS THAT CORRECT?

A. Not exactly. Although I was not a member of AT&T's negotiations team which met with BellSouth on a regular basis, I was involved in the negotiations in that I provided guidance and assistance to Mr. Peacock on various compensation and network issues. Mr. Peacock frequently discussed with me the status of the

negotiations and sought my comments and approval regarding proposed language dealing with compensation issues and network facilities. As a manager in AT&T's Local Services and Access Management organization, I had responsibility for implementing various compensation and network provisions agreed to by AT&T and BellSouth. Thus I had a significant interest and provided assistance in the negotiations.

Q. HOW OFTEN DID MR. PEACOCK DISCUSS THE STATUS OF INTERCONNECTION NEGOTIATIONS WITH YOU AND SEEK YOUR COMMENTS AND APPROVAL OF LANGUAGE.?

A. Very frequently, sometimes daily, when issues were being discussed that specifically affected AT&T's compensation to BellSouth for the transport and termination of traffic.

Q. WERE THERE CERTAIN COMPENSATION ISSUES WHICH WERE PARTICULARLY IMPORTANT TO AT&T WHICH YOU DISCUSSED WITH MR. PEACOCK?

A. Yes. One of the most significant issues was what constituted "Local Traffic" for purposes of applying local reciprocal compensation rates. If traffic is not considered "Local Traffic," it is

generally transported and terminated at switched access rates (which are higher) than local reciprocal compensation rates.

Q WHAT WAS AT&T'S POSITION REGARDING WHAT CONSTITUTED "LOCAL TRAFFIC?"

A. AT&T considered all intraLATA traffic to be "Local Traffic" subject to local reciprocal compensation rates.

Q. TO THE BEST OF YOUR KNOWLEDGE, WAS BELLSOUTH AWARE OF AT&T'S POSITION THAT ALL INTRALATA TRAFFIC WAS TO BE CONSIDERED "LOCAL TRAFFIC" TO BE TRANSPORTED AND TERMINATED AT LOCAL RECIPROCAL COMPENSATION RATES?

A. Yes. In addition to the discussions which Mr. Peacock has had with BellSouth, during the last several years I have met with Jerry Hendrix of BellSouth to resolve various pricing and related compensation issues for AT&T. Mr. Hendrix is Ms. Shiroishi's supervisor. During these meetings, I have had numerous discussions with Mr. Hendrix regarding AT&T's desire to negotiate an interconnection agreement with BellSouth which defines "Local Traffic" to include intraLATA traffic.

1 Q IF SUCH A DEFINITION COULD NOT BE AGREED TO WITH
2 BELLSOUTH ON A VOLUNTARY BASIS, WOULD AT&T ARBITRATE
3 THE ISSUE OF WHAT CONSTITUTES "LOCAL TRAFFIC" BEFORE
4 A STATE COMMISSION?
5
6 A. Most definitely.
7
8 Q. DID AT&T ARBITRATE THIS ISSUE WITH BELLSOUTH IN NORTH
9 CAROLINA OR ANY OTHER STATE IN THE MOST RECENT
10 ROUND OF INTERCONNECTION NEGOTIATIONS?
11
12 A. No we did not. Before AT&T's arbitration petition was filed in
13 North Carolina and in other states, I was advised by Mr. Peacock
14 that BellSouth had agreed that local reciprocal compensation rates
15 would apply to both local and intraLATA traffic and that we would
16 not have to arbitrate this issue.
17
18 Q. AFTER AT&T FILED ITS ARBITRATION PETITION IN NORTH
19 CAROLINA, DID MR. PEACOCK EVER ADVISE YOU THAT
20 BELLSOUTH WAS PROPOSING NEW LANGUAGE REGARDING
21 WHAT CONSTITUTED "LOCAL TRAFFIC?"
22
23 A. Yes. In the context of continuing to negotiate two unresolved

issues while the arbitration proceeding was pending, Mr. Peacock advised me that BellSouth had proposed new "LATAwide" local concept language regarding what constituted "Local Traffic."

Q. WHAT WERE THE TWO ISSUES WHICH AT&T AND BELLSOUTH WERE CONTINUING TO NEGOTIATE?

A. Compensation for transporting and terminating Internet Service Provider ("ISP's") bound traffic and Voice Over Internet Protocol ("VOIP") calls.

Q. WHAT WAS THE NEW LANGUAGE PROPOSED BY BELLSOUTH?

A. Again, BellSouth proposed what was referred to as a "LATAwide" local concept for defining "Local Traffic." Specifically, the language proposed by BellSouth in a new Section 5.3.1.1 stated:

> "The Parties agree to apply a "LATAwide" local concept to this Attachment 3, meaning that traffic that has traditionally been treated as intraLATA toll will now be treated as local for intercarrier compensation purposes, except for those calls that are originated or terminated through switched access arrangements as

1 established by the ruling regulatory body."

2

3 Q. DID YOU DISCUSS WITH MR. PEACOCK BELLSOUTH'S INTENT
4 REGARDING THE LANGUAGE "EXCEPT FOR THOSE CALLS THAT
5 ARE ORIGINATED OR TERMINATED THROUGH SWITCHED
6 ACCESS ARRANGEMENTS AS ESTABLISHED BY RULING
7 REGULATORY BODY" IN THIS NEW SECTION 5.3.1.1?

8

9 A. Yes. Mr. Peacock explained that BellSouth wanted to include the
10 language to protect BellSouth in the event a state commission or
11 the FCC determined that ISP traffic was deemed jurisdictionally to
12 be interLATA traffic even though the traffic technically stayed
13 within a LATA. Mr. Peacock further explained that BellSouth
14 would not allow such traffic to be compensated as "Local Traffic"
15 when AT&T's long distance network transported this traffic. He
16 said Ms. Shiroishi also was concerned about a state commission or
17 the FCC determining VOIP calls to be interLATA traffic. Further,
18 we discussed the words "regulatory ruling body" and requested
19 that the words be changed to "State Commission or the FCC" given
20 BellSouth's statements that "regulatory ruling body" meant "state
21 commission or the FCC."

22

23 Q. DID YOU HAVE FURTHER DISCUSSIONS WITH MR. PEACOCK

1 REGARDING ANY OTHER LANGUAGE IN SECOND
2 INTERCONNECTION AGREEMENT REGARDING WHAT
3 BELLSOUTH INTENDED RELATIVE TO THE "SWITCHED ACCESS
4 ARRANGEMENTS" LANGUAGE DISCUSSED ABOVE?
5
6 A. Yes. As discussions between Mr. Peacock and BellSouth
7 continued, BellSouth also proposed a definition of "Switched
8 Access Traffic" in Section 5.3.3 (which included only intrastate
9 interLATA and interstate interLATA traffic as "Switched Access
10 Traffic"). BellSouth also proposed language to make it clear that
11 Section 5.3.3 with its definition of "Switched Access Traffic" was
12 "interrelated" to Section 5.3.1.1. (which included the "LATAwide"
13 local concept language regarding "Local Traffic" as well as the
14 "switched access arrangements" language regarding not
15 misrepresenting interLATA traffic as being subject to local
16 compensation rates).
17
18 Q. GIVEN THAT BELLSOUTH'S PROPOSED LANGUAGE DISCUSSED
19 ABOVE INVOLVED WHAT CONSTITUTED "LOCAL TRAFFIC,"
20 WOULD MR. PEACOCK HAVE NEEDED YOUR APPROVAL
21 BEFORE AGREEING TO ANY SUCH LANGUAGE?
22
23 A. Yes.

5r

Q. DID YOU PROVIDE YOUR APPROVAL?

A. Yes. I gave Mr. Peacock my approval after he advised me of BellSouth's rationale for the language as had been explained to him and others at AT&T. That rationale was that BellSouth wanted to include language regarding "switched access arrangements" in order to protect BellSouth in the event a state commission or the FCC determined that ISP bound traffic was interLATA traffic even though the traffic technically stayed within a LATA; and in the event that the FCC determined that VOIP calls constituted interLATA traffic. Mr. Peacock also indicated that AT&T and BellSouth had reached agreement on a clear and unambiguous definition of "Switched Access Traffic" in Section 5.3.3 that was limited to intrastate interLATA and interstate interLATA traffic and did not include any intraLATA or "LATAwide Traffic." Finally, we discussed that BellSouth also had proposed language that Section 5.3.3 (which defined "Switched Access Traffic") was "interrelated" to Section 5.3.1.1 (which set forth the "LATAwide" local concept for "Local Traffic"). Based on these provisions and Mr. Peacock's discussions with Ms. Shiroishi, I believed that the language which BellSouth had asked be included in Second Interconnection Agreement provided that intraLATA

1 traffic would be compensated at local reciprocal compensation
2 rates and not at switched access rates. It clearly was AT&T's
3 intent for that to be the case, and we never would have agreed to
4 any language that would have required us to pay switched access
5 rates for local intraLATA traffic.
6
7 Q. SPECIFICALLY, AT PAGE 3, LINES 11-18, OF MS. SHIROISHI'S
8 TESTIMONY, SHE STATES THAT IF AN INTRALATA CALL
9 ORIGINATES OR TERMINATES THROUGH SWITCHED ACCESS
10 ARRANGEMENTS, THEN THAT CALL WOULD BE EXCLUDED
11 FROM THE DEFINITION OF "LOCAL TRAFFIC." SHE THEN GOES
12 ON TO STATE "SUCH A CALL WOULD BE GOVERNED BY
13 BELLSOUTH'S SWITCHED ACCESS TARIFFS AND WOULD BE
14 SUBJECT TO THE APPROPRIATE SWITCHED ACCESS RATES."
15 DID MR. PEACOCK EVER STATE TO YOU THAT MS. SHIROISHI
16 OR ANYONE ELSE FROM BELLSOUTH HAD MADE ANY SUCH
17 STATEMENTS TO AT&T IN NEGOTIATIONS MEETINGS BETWEEN
18 THE PARTIES OF IN ANY OTHER DISCUSSIONS WITH
19 MR. PEACOCK?
20
21 A. Absolutely not.
22
23 Q. DOES SECOND INTERCONNECTION AGREEMENT CONTAIN ANY

1 PROVISIONS WHICH CONTAIN ANY OF THE CONCLUSIONS
2 MADE ABOVE BY MS. SHIROISHI?
3
4 A. No it does not.
5
6 Q. WITH RESPECT TO MS. SHIROISHI'S TESTIMONY AT PAGE 9
7 REGARDING VARIOUS TRUNKING "REQUIREMENTS," IS THE
8 INTRALATA TRAFFIC, WHICH IS IN DISPUTE IN THIS
9 PROCEEDING, TRAFFIC IN WHICH AT&T PROVIDES ITS
10 ORIGINATING CUSTOMER BOTH THE FACILITIES-BASED
11 DEDICATED LOOP TO THE CUSTOMER'S PREMISE AS WELL AS
12 LOCAL SWITCHING (I.E., DIAL TONE), INCLUDING THE
13 UNBUNDLED NETWORK ELEMENT PLATFORM OR LOOP/PORT
14 COMBINATION ("UNE-P")?
15
16 A. Yes.
17
18 Q. WITH RESPECT TO UNE-P, DOES BELLSOUTH ALSO REFUSE TO
19 TREAT THESE INTRALATA CALLS AS "LOCAL TRAFFIC"?
20
21 A. Yes. UNE-P is a new local service option available to AT&T. Due to
22 billing and network capabilities that currently exist within AT&T's
23 traditional long distance business, AT&T routes certain of its

customers' intraLATA traffic (e.g., intraLATA 1+ dialed calls) over the AT&T long distance network and then terminates that traffic back to BellSouth over in-place switched access provisioned facilities. Even though AT&T is the originating carrier for these types of calls, because the call "leaves" the AT&T network and transverses switched access facilities within the LATA, BellSouth requires AT&T to pay switched access rates for such calls based on its interpretation of Second Interconnection Agreement. To put BellSouth's position in perspective, if an AT&T UNE-P customer was calling a BellSouth customer (i.e., a customer which is "PIC'D" or uses BellSouth for intraLATA service) and the BellSouth customer returns that call to the AT&T UNE-P customer, AT&T would receive no compensation from BellSouth. This is because BellSouth alleges that it "owns" all of the UNE-P network and thus the call never leaves its network even though AT&T is providing local service (through UNE-P) to the customer being called by BellSouth's customer. Further, if that same BellSouth customer were to call an AT&T facilities based local customer (not UNE-P), and the BellSouth's customer's call does leave BellSouth's network, AT&T charges BellSouth local reciprocal compensation rates to terminate that call in accordance with the provisions of Second Interconnection Agreement "Local Traffic" and not switched access rates.

Q. DOES AT&T PURCHASE ORIGINATING SWITCHED ACCESS FROM BELLSOUTH FOR ITS LATAWIDE LOCAL TRAFFIC?

A. No it does not.

Q. WITH RESPECT TO MS. SHIROISHI'S TESTIMONY AT PAGES 9, LINES 11-24 AND PAGE 10, LINES 1-11, MS. SHIROISHI FURTHER STATES "...THE DEFINITION [OF LOCAL TRAFFIC] IN SECOND INTERCONNECTION AGREEMENT RELATED TO THE TYPE OF ARRANGEMENT, OR TRUNK GROUP, THAT THE TRAFFIC ORIGINATED OVER OR TERMINATED THROUGH." SHE THEN GOES ON TO STATE "THE DESCRIPTIONS OF THE TRUNKING ARRANGEMENTS MAKE CLEAR THAT THEY ARE FOR LOCAL AND INTRALATA TOLL TRAFFIC AND THE TRUNKING ARRANGEMENTS ARE NOT THE SAME AS THE SWITCHED ACCESS TRUNKING ARRANGEMENTS SET FORTH IN BELLSOUTH'S TARIFFS." ARE ANY OF THESE STATEMENTS BY MS. SHIROISHI FOUND IN ATTACHMENT 3 TO SECOND INTERCONNECTION AGREEMENT?

A. No they are not.

Q. WITH RESPECT TO EXISTING TRUNKING ARRANGEMENTS UTILIZED BY AT&T, HAS BELLSOUTH IN THE PAST, AND DOES BELLSOUTH CURRENTLY CHARGE AT&T LOCAL RECIPROCAL COMPENSATION RATES FOR "LOCAL TRAFFIC" WHICH IS NOT TRANSPORTED OVER "LOCAL INTERCONNECTION TRUNKS" AS DEFINED BY BELLSOUTH?

A. Yes. Several years ago, in an effort to offer local services to various business customers, AT&T began offering local service using 4ESS switched and related facilities which traditionally had been used to provide long distance services. BellSouth has in the past, and it continues today under Second Interconnection Agreement, to charge AT&T local reciprocal compensation rates for calls which are transported over these facilities. For compensation billing purposes, AT&T provides BellSouth a Percent Local Usage ("PLU") factor in order to determine what portion of AT&T's traffic is "Local Traffic" versus "Switched Access Traffic." This factor changes from time to time as traffic levels and types vary.

Q. HAS BELLSOUTH AGREED TO THIS PLU FACTOR BILLING PROCESS?

A. Yes. BellSouth has agreed to this process in Second

Interconnection Agreement.

Q. TO YOUR KNOWLEDGE HAS BELLSOUTH CONTACTED AT&T'S ACCESS BILLING MANAGEMENT ORGANIZATION TO INFORM AT&T THAT IT WILL NO LONGER ACCEPT A PLU FACTOR FROM AT&T?

A. No. However, BellSouth has "frozen" AT&T's PLU factor at the September 2001 PLU factor level while this dispute is pending.

Q. WITH RESPECT TO MS. SHIROISHI'S TESTIMONY AT PAGE 9 REGARDING VARIOUS TRUNKING "REQUIREMENTS," IS IT CLEAR TO YOU WHAT MS. SHIROISHI IS ALLEGING?

A. No it is not. However, she seems to be implying that AT&T must "migrate" or "convert" its existing trunks to "local only" trunks in order for AT&T's "Local Traffic" to be compensated at local reciprocal compensation rates.

Q. DID MR. PEACOCK EVER ADVISE YOU THAT MS. SHIROISHI HAD INTERPRETED THE INTERCONNECTION PROVISIONS OF ATTACHMENT 3 TO REQUIRE ANY SUCH "MIGRATIONS" OR "CONVERSIONS"?

A. Absolutely not. In fact, Mr. Peacock and I never discussed any "migration" or "conversion" requirements in Attachment 3 that would affect AT&T. I feel confident he would have done so had Ms. Shiroishi explained her "interpretation" of these provisions to him as she has testified in this proceeding.

Q. WOULD IT BE A SIGNIFICANT AND EXPENSIVE UNDERTAKING FOR AT&T TO IMPLEMENT THE "MIGRATIONS" AND "CONVERSIONS" SHE REFERENCES?

A. Yes. Ms. Shiroishi is suggesting that AT&T replace many of its existing facilities, which AT&T implemented over many years to operate a combined local and long distance network, to local facilities. This would be an inefficient and expensive endeavor and Ms. Shiroishi knows that. In this respect, her interpretation of AT&T's trunking "requirements" under Second Interconnection Agreement (in order to have AT&T's "local traffic" considered "Local Traffic") are akin to the proverbial "poison pill." It certainly was never AT&T's understanding or intent that it would need to engage in a wholesale rebuilding of its combined local and long distance network in order to have its "local traffic" to be considered "Local Traffic" under Second Interconnection Agreement for local

1 reciprocal compensation purposes. Moreover, BellSouth also
2 would experience increase costs to implement such a "migrated" or
3 "converted" network. Those sections from Second Interconnection
4 Agreement referred by Ms. Shiroishi in her Direct Testimony allow
5 BellSouth to request AT&T to implement any such "migration" or
6 "conversion." To date, BellSouth has never made any such request
7 of AT&T.
8
9 Q. IN TRYING TO MAKE LOGICAL SENSE OF MS. SHIROISHI'S
10 TESTIMONY, FROM A TECHNICAL PERSPECTIVE, ARE THERE
11 ANY DIFFERENCES BETWEEN TRUNKS USED TO TRANSPORT
12 "LOCAL TRAFFIC" AND TRUNKS WHICH ARE USED TO
13 TRANSPORT SWITCHED ACCESS TRAFFIC?
14
15 A. No, as the saying goes in the industry, "a trunk is a trunk is a
16 trunk." Trunks which are used to transport "Local Traffic" and
17 "Switched Access Traffic" are functionally equivalent.
18
19 Q. FINALLY, ARE THERE PROVISIONS IN ATTACHMENT 3 TO
20 SECOND INTERCONNECTION AGREEMENT WHICH WOULD
21 LEAD YOU TO CONCLUDE THAT "LOCAL TRAFFIC" AND
22 "SWITCHED ACCESS TRAFFIC" CAN BE TRANSPORTED OVER
23 THE SAME TRUNKS?

A. Yes. Sections 5.3.7 and 5.3.9 allow the parties to determine the amount of local and switched access traffic to be billed based on the parties' projections of how much of their traffic is "Local Traffic" and how much of their traffic is "Switched Access Traffic." If AT&T was required under Second Interconnection Agreement to transport all of its "Local Traffic" only over "local trunks" and all of its "Switched Access Traffic" over only "Switched Access Trunks," the type of traffic could be determined from the trunk group carrying the traffic. As a result, there would be no need for the parties to project with "factors" how much of their traffic is "Local Traffic" and how much of their traffic is "Switched Access Traffic". For the Commission's convenience, I have attached a copy of Sections 5.3.7 and 5.3.9 of Attachment 3 as J. A. King Rebuttal Exhibit 1.

Q. DOES THIS CONCLUDE YOUR TESTIMONY?

A. Yes.

1 BY MS. CECIL:
2 Q. Mr. King, have you prepared a summary of your
3 testimony?
4 A. Yes, I have.
5 Q. Would you please give that?
6 A. Yes. Thank you.
7 Good morning, Commissioners. My name is Jeffrey
8 A. King and I am employed by AT&T Corp as a district
9 manager in the local services and access management
10 organization. I have been employed by AT&T for almost
11 17 years in various pricing and access management
12 positions.
13 I am responsible for all compensation issues with
14 BellSouth; thus, my testimony describes AT&T's complaint
15 that BellSouth has breached, and continues to breach,
16 the parties' July 19th, 2001 interconnection agreement
17 regarding compensation for the exchange of local
18 traffic. My testimony also responds to the direct
19 testimony of BellSouth's Beth Shiroishi.
20 AT&T's complaint alleges a straightforward breach
21 of contract claim which can and should be resolved based
22 on the literal words of the contract. The subject of
23 the complaint relates to compensation to be paid by AT&T
24 to BellSouth for the exchange of certain traffic between

1 the parties.
2 As the Commission is aware, when an AT&T customer
3 calls a BellSouth customer, BellSouth is entitled to
4 receive compensation from AT&T because the call is
5 completed, or as we say in the industry, is terminated
6 using BellSouth's network. There generally are two
7 compensation rates which apply to the termination of
8 such calls.
9 The first rate is known as local reciprocal
10 compensation which applies to the termination of local
11 calls; the second rate is referred to as switched access
12 rates which also -- which applies to all switched access
13 calls. Generally switched access rates are higher than
14 local reciprocal compensation rates; thus, it is
15 extremely important to know what calls are local calls
16 and what calls are switched access calls.
17 In the July 19th, 2001 interconnection agreement,
18 for purposes of defining local traffic, the parties
19 agreed to adopt a LATAwide local concept, meaning that
20 all calls within a local access transport area or
21 LATA -- excuse me -- which traditionally had been
22 compensated at higher switched access rates would be
23 compensated at lower reciprocal compensation rates
24 except for calls that originated or terminated through

1 switched access arrangements as established by the State
2 Commission or the FCC.
3 Now, BellSouth has stipulated that within the
4 State of North Carolina, as is shown on the LATA map to
5 my right to your left, that there are seven LATAs;
6 therefore, when AT&T and BellSouth agreed that local
7 calls would include all LATAwide calls, the parties
8 agreed that if an AT&T local customer in the Greensboro
9 LATA called a BellSouth customer in that same Greensboro
10 LATA, BellSouth would charge AT&T local reciprocal
11 compensation rates for terminating that call.
12 However, for calls that cross over from one LATA
13 to another, for example, if that same AT&T customer in
14 the Greensboro LATA called a different BellSouth
15 customer in the Charlotte LATA, the parties agreed that
16 BellSouth would charge AT&T switched access rates for
17 terminating that interLATA call. In other words, it was
18 crossing from one LATA to another LATA.
19 Despite the clear language of the contract, after
20 the interconnection agreement was executed, BellSouth
21 refused to charge AT&T local reciprocal compensation
22 rates for terminating all such LATAwide calls; instead,
23 for certain calls which BellSouth alleges are terminated
24 over switched access arrangements, BellSouth has

1 charged, and continues to charge, AT&T higher switched
2 access rates to terminate these calls. This is in clear
3 violation of the interconnection agreement.
4 BellSouth's breach is based on its improper
5 implementation of the contract. First, in implementing
6 the agreement, BellSouth takes out of context language
7 regarding switched access arrangements. Second,
8 BellSouth ignores all of the language which applies to
9 and, thus, governs what constitutes a switched access
10 arrangement.
11 For the Commission's convenience, the language
12 which BellSouth takes out of context is found in section
13 5.3.1.1 and is underlined, even including in the -- in
14 Mr. Shore's chart as well as the chart that's behind it.
15 COMMISSIONER ERVIN: Mr. Shore, would you take
16 your chart down so he can use his.
17 MR. SHORE: Sure.
18 COMMISSIONER ERVIN: Thank you.
19 A. So the -- this has been taken out of context to my
20 left. Similarly, the language and which BellSouth
21 ignores totally is found in section 5.3.3. And I've
22 also underlined that in red. And it's on the chart in
23 front of you here in front of me (indicating).
24 In reviewing section 5.3.1 -- dot one, the parties

1 agreed to apply a LATAwide local concept, meaning the
2 traffic that has traditionally been treated as intraLATA
3 or LATAwide toll traffic would be treated as local
4 traffic except for those calls that are originated or
5 terminated over switched access arrangements as
6 established by the State or -- State Commission or FCC.
7 With respect to switched access arrangements, in
8 section 5.3.3 the parties did define switched access
9 traffic to which, by definition, switched access rates
10 would apply. The definition of switched access traffic,
11 as clearly defined in section 5.3.3, governs what
12 constitutes a switched access arrangement in section
13 5.3.1.1. This is apparent from the language found at
14 the end of section 5.3.3.
15 It states, "This section is interrelated to
16 section 5.3.1.1." When these two interrelated sections
17 are read together, the language in 5.3.1.1 (indicating)
18 which states "except for calls originated or terminated
19 through switched access arrangements as established by
20 the State Commission or FCC," tracks perfectly with the
21 definition of switched access traffic in 5.3.3. This is
22 because a State Commission has jurisdiction over
23 intrastate interLATA calls and the FCC has jurisdiction
24 over interstate interLATA calls.

1 In Miss Shiroishi's direct testimony she does not
2 rely upon any language in the contract regarding
3 switched access arrangements; instead, she states that
4 the parties discussed the fact that switched access
5 arrangements are offered through each party's switched
6 access tariff. As I stated in my rebuttal testimony, at
7 no time did Mr. Peacock, AT&T's lead negotiator with
8 BellSouth, or anyone else at AT&T advise me that Miss
9 Shiroishi had made this statement or a similar statement
10 before the interconnection agreement was signed on July
11 19th, 2001. And I think your sheet has 2002. I
12 apologize.
13 Had I been so informed, I would never have
14 authorized Mr. Peacock to proceed with executing the
15 interconnection agreement on behalf of AT&T. To the
16 contrary, I was advised by Mr. Peacock that Miss
17 Shiroishi stated that BellSouth had requested the
18 switched access arrangements language in order to
19 protect BellSouth in the event a State Commission or the
20 FCC determined that calls to internet service providers
21 was deemed jurisdictionally to be interLATA even though
22 the call originated and terminated within the LATA.
23 Additionally, Mr. Peacock also stated that Miss
24 Shiroishi wanted to make sure that voice over internet

1 protocol calls was not included in the definition of
2 LATAwide traffic in the event the FCC determined that
3 VOIP -- which will be the acronym you may hear, voice
4 over internet protocol -- calls are constituted as
5 interLATA traffic and subject to switched access rates
6 per the definition of switched access in our contract.
7 Miss Shiroishi also implied in her direct
8 testimony that AT&T must migrate or convert its existing
9 network to local only trunks in order for AT&T to have
10 its local traffic billed at local reciprocal
11 compensation rates. There is no such requirement. Had
12 we been required to do so, it would have been meant a
13 major network reconfiguration, something AT&T would not
14 have accepted.
15 AT&T's complaint asks the Commission to declare
16 BellSouth in breach of the interconnection agreement and
17 to order BellSouth to do three things: One, issue a
18 credit to AT&T in the amount of nearly $2.6 million for
19 the period July 1, 2001 through October 31st, 2002;
20 number two, issue a credit to AT&T representing interest
21 at the rate of one and a half percent per month on the
22 amount in question of approximately 2.6 million as
23 allowed under the terms of the interconnection agreement
24 from July 2001 until such credit is paid; number three,

1 charge AT&T from the November 1 time frame going forward
2 local reciprocal compensation rates for the termination
3 of all LATAwide traffic.
4 In closing, the interconnection agreement is
5 clear and unambiguous regarding BellSouth (sic)
6 obligation to charge AT&T local reciprocal compensation
7 rates for terminating local traffic; thus, the
8 Commission should find BellSouth in breach of the
9 contract. This concludes my summary and thank you.
10 MS. CECIL: The witness is available for
11 cross-examination.
12 COMMISSIONER ERVIN: All right. Mr. Shore.
13 MR. SHORE: Thank you, Commissioner.
14 CROSS-EXAMINATION BY MR. SHORE:
15 Q. Mr. King, good morning.
16 A. Good morning.
17 Q. I'm Andrew Shore. I represent BellSouth. I've
18 got some questions for you about your sworn testimony in
19 this case. Mr. King, you're the only witness that filed
20 direct testimony in this case on behalf of AT&T,
21 correct?
22 A. Correct.
23 Q. Okay. And can we agree that the -- I think this
24 is an easy one. We ought to be able to agree at least

1 on this, that the -- there's a second amendment to the
2 second interconnection agreement that's at issue in this
3 case. I believe it's an exhibit to your direct
4 testimony.
5 A. The second agreement? Yes.
6 Q. There's a second amendment to that agreement that
7 contains the language that's at issue in this case,
8 correct?
9 A. Correct.
10 Q. And that second amendment was subsequent to the
11 second agreement, correct?
12 A. I believe so, yes.
13 Q. Let me put it up, if I can, the language from the
14 second amendment that's at issue here rather than --
15 from the agreement. Mr. King, you contend that -- and I
16 think it's in your Exhibit 2 and you updated that
17 today -- that in the first year term of the second
18 agreement that AT&T overpaid or BellSouth overcharged
19 AT&T about $2 million?
20 A. Correct.
21 Q. You didn't sign the July 2001 interconnection
22 agreement between these parties, correct?
23 A. I am not a signator, no.
24 Q. And you didn't sign the second amendment to the

1 agreement either, true?
2 A. I am not a signer, but I am an authorizer to the
3 folks that are responsible to signing. So they would
4 have to have had my approval before signing, yes.
5 Q. You didn't participate in the negotiation meetings
6 with BellSouth leading up to the execution of the July
7 2001 agreement, correct?
8 A. I was not part of the face-to-face negotiations,
9 correct.
10 Q. And before the parties signed the second agreement
11 you never had any discussions with BellSouth people
12 about the meaning of the contract term at issue in this
13 case, correct?
14 A. Specific to the language I don't recall any direct
15 communication, no.
16 Q. What you tell us in your testimony is that your
17 understanding of BellSouth's purpose in proposing the
18 local traffic definition and exclusion is based upon
19 what Mr. Peacock told you, correct?
20 A. That and my own evaluation as well; but yes,
21 that's correct.
22 Q. And you state, on page 6 of your direct testimony,
23 that the July 2001 agreement is clear that all calls
24 transported and terminated within a LATA are to be

1 treated as local traffic and recip comp rates rather
2 than switched access apply, correct?
3 A. Page 6?
4 Q. Yes, sir, lines 2 through 7.
5 A. That's my testimony, correct.
6 Q. And that would include intraLATA calls that are
7 originated or terminated through switched access
8 arrangements, correct? That's your position?
9 A. Yes.
10 Q. And is it your -- it's your testimony that the
11 exclusion in section 5.3.1.1 applies only to interLATA
12 calls, correct?
13 A. It applies to interLATA calls and is also intended
14 to address the issues at hand that brought about this
15 language, which is the internet service provider traffic
16 as well as the voice over internet protocol traffic.
17 Q. Your testimony is that this language that's at
18 issue in this case doesn't exclude any intraLATA calls,
19 correct?
20 A. As written -- well, as I indicated, the VOIP issue
21 and the internet service provider calls are part of the
22 exclusion because we are in dispute as to whether that
23 is to be jurisdictionally intraLATA or interLATA.
24 Q. Okay. We'll get to those specific issues in a

1 minute. But if I understand your testimony correctly --
2 A. Otherwise all calls within the LATA, yes, are
3 local.
4 Q. And the exception here would only apply to
5 interLATA calls, correct?
6 A. Correct.
7 Q. InterLATA calls are never considered local,
8 correct?
9 A. Correct.
10 Q. Can we agree that the term "switched access
11 arrangements" doesn't appear anywhere else in the
12 parties' agreement other than in this provision 5.3.1.1?
13 A. That is correct.
14 Q. Switched access arrangements is a term that
15 appears in BellSouth's North Carolina Access Service
16 Tariff, correct?
17 MS. CECIL: I'd object unless he's got the
18 tariff to show it to him, Commissioner.
19 COMMISSIONER ERVIN: I'm sorry. What was the
20 question, Mr. Shore?
21 BY MR. SHORE:
22 Q. Do you know whether or not the term switched
23 access arrangements appears in BellSouth's North
24 Carolina Access Service Tariff?

1 COMMISSIONER ERVIN: All right. And the basis
2 for the objection, Miss Cecil, is what?
3 MS. CECIL: My objection is I'd like for the
4 witness to be able to see any document that Mr. Shore
5 may be referring to.
6 COMMISSIONER ERVIN: I think -- I think the
7 question was if he knew that, Miss Cecil. I'm going to
8 overrule it to that specific question.
9 MS. CECIL: That's fine. If he knows.
10 COMMISSIONER ERVIN: Overruled.
11 A. To say that the term "arrangement" exists there,
12 I'm not sure, unless you have -- I mean, I can review
13 it, but I'm not sure that the term arrangement exists.
14 Obviously it is a term I'm familiar with in the
15 industry.
16 Q. You're generally familiar, as part of your job
17 responsibilities with BellSouth's Access Service Tariff,
18 correct?
19 A. Correct.
20 MR. SHORE: Let me hand out, now then, a copy
21 of that tariff. And I'll ask that that be identified as
22 BellSouth Cross Exhibit 1.
23 COMMISSIONER ERVIN: We'll mark this -- just
24 to keep it straight, let's mark it BellSouth King

1 Cross-examination Exhibit Number 1.
2 MR. SHORE: And Commissioner Ervin, a
3 procedural matter --
4 COMMISSIONER ERVIN: I assume you're not going
5 to pass out the entire access service tariff?
6 MR. SHORE: I'm going to pass out Section E.6.
7 Would it be easier -- I may use documents, the same
8 cross exhibits with multiple witnesses. So rather than
9 mark it as King Cross 1 would it be easier to mark it as
10 BellSouth Cross 1 so we don't have to mark things twice,
11 potentially?
12 COMMISSIONER ERVIN: All right. Okay. All
13 right. I'll rescind what I said earlier and let you
14 proceed as you prefer.
15 MR. SHORE: Just a suggestion.
16 COMMISSIONER ERVIN: This will be BellSouth
17 Cross Exhibit Number 1.
18 BELLSOUTH CROSS EXHIBIT NUMBER 1
19 (Identified)
20 BY MR. SHORE:
21 Q. Mr. King, I've handed you section E.6 of
22 BellSouth's North Carolina Switched Access Service
23 Tariff. I'd ask that you turn to the fourth page of
24 that exhibit. It's a section entitled General E.6.1.

1 Do you see that?
2 A. Yes, I do.
3 Q. And can you go down to the fourth paragraph down
4 where it says that BellSouth's switched access service
5 is provided in various BellSouth switched access
6 arrangement feature group arrangements which are
7 differentiated by the type of connection and the access
8 calling pattern. Do you see that?
9 MS. CECIL: I'm not following that, Mr. Shore.
10 A. That's the third -- third paragraph?
11 Q. You're correct, third paragraph.
12 COMMISSIONER ERVIN: Where -- where are we?
13 Where are we, Mr. Shore?
14 COMMISSIONER KERR: What page are we on?
15 MR. SHORE: On the fourth page of that
16 exhibit. It's -- up at the top it says E.6.1 General.
17 COMMISSIONER ERVIN: Okay.
18 BY MR. SHORE:
19 Q. Third paragraph down, Mr. King. Do you see that?
20 A. Yes, sir.
21 Q. Can you just read that to the Commission?
22 A. BellSouth SWA -- which stands for switched access
23 service -- is provided in various BellSouth switched
24 access feature group -- FG is what's printed --

1 arrangements which are differentiated by the type of
2 connection in that line side connection and trunk side
3 connection and the access calling pattern. Example,
4 950-10XX calling in a LATA, comma, 101 XXXX calling in a
5 LATA, et cetera.
6 Q. Thank you. And if you --
7 COMMISSIONER WILKINS: We're actually on the
8 ninth page, revised page 1. We're not on page 4; is
9 that correct?
10 MR. SHORE: That's right. It's the fourth
11 page of the exhibit. And up at top it's identified as
12 ninth revised page 1. That's correct, Commissioner
13 Wilkins.
14 BY MR. SHORE:
15 Q. If you go down to the bottom of that same page,
16 Mr. King, Section E.6.1.1. Do you see that?
17 A. Yes, sir.
18 Q. That's titled BellSouth switched access feature
19 group arrangements, correct?
20 A. Correct.
21 Q. Can we agree that that section goes on to describe
22 the configuration of facilities that make up each type
23 of switched access arrangement offered in this tariff?
24 A. That's the -- that's what's stated, yes.

1 Q. AT&T purchases, from BellSouth out of this tariff
2 today, switched access arrangements, true?
3 A. Correct.
4 Q. And AT&T uses those switched access arrangements
5 to terminate intraLATA toll traffic in North Carolina
6 today, correct?
7 A. Correct.
8 Q. You were familiar, I think you testified a few
9 minutes ago, with the term switched access arrangements
10 before you saw it in the contract language at issue in
11 this case, correct?
12 A. Yes.
13 Q. And your understanding was that it was -- a
14 switched access arrangement was a facility, correct?
15 MS. CECIL: I'd object. I don't believe he
16 has testified this morning that it was a facility. Did
17 he?
18 MR. SHORE: That wasn't my question,
19 Commissioner Ervin. My question was was it your
20 understanding that a switched access arrangement, before
21 you ever saw the contract language in this case, was a
22 facility.
23 MS. CECIL: No. I thought the question was
24 didn't you testify earlier today that it was a facility.

1 COMMISSIONER ERVIN: Rephrase -- ask your
2 question again, Mr. Shore. I'm --
3 BY MR. SHORE:
4 Q. Was it your understanding, before you ever saw the
5 contract language at issue in this case, that a switched
6 access arrangement was a facility or facilities?
7 COMMISSIONER ERVIN: Overruled. You can
8 answer it if you can.
9 A. Well, a switched access arrangement is obviously
10 something that's purchased out of the switched access
11 tariff. It is a facility. It is getting you traffic
12 from one point to another.
13 BY MR. SHORE:
14 Q. Do you have your deposition, the transcript of
15 your deposition up there with you, Mr. King?
16 A. I believe so, yes.
17 Q. You recall me taking your deposition just two days
18 ago, don't you?
19 A. Yes, sir.
20 Q. You told the truth at that deposition, correct?
21 A. Yes, sir.
22 Q. Okay. Would you -- turn, if you would, to page 5
23 of the deposition transcript. Let me know when you get
24 there.

1 (Pause.)
2 A. I'm there.
3 Q. Okay. Down at line 18 where I ask you: "Just
4 tell me, then, what your understanding of what a
5 switched access arrangement is." And Miss Cecil
6 interposes: "Generally?" And I say: "Right." And
7 could you just read what your answer was at your
8 deposition to that question.
9 A. Generally, it is the facility that provides the
10 transport between two points or multiple points. And as
11 I added here, it is, you know, also any -- you know, any
12 purchase out of your switched access tariff.
13 Q. On -- in your rebuttal testimony, Mr. King, you
14 say that Mr. Peacock told you that BellSouth wanted the
15 exclusion language that's at issue in this case except
16 for those calls originated or terminated through
17 switched access arrangements as established by the State
18 Commission or FCC in order to protect BellSouth, number
19 one, in the event a State Commission or the FCC
20 determined that ISP traffic was interLATA and, number
21 two, in the event that the FCC determined that VOIP,
22 voice over internet protocol, calls constituted
23 interLATA traffic, true?
24 A. Correct.

1 Q. Now, first let's talk about VOIP calls. You knew
2 that BellSouth's position, in its arbitration with AT&T
3 and generally, was that voice over internet calls should
4 be treated as interLATA, correct?
5 A. That has been BellSouth's position.
6 Q. To your knowledge, BellSouth has never changed
7 that position, correct?
8 A. Correct.
9 Q. Did Mr. Peacock explain to you why it was that
10 BellSouth would need to be protected from a decision by
11 the FCC that was consistent with BellSouth's position?
12 Namely, that voice over internet calls should be treated
13 as interLATA?
14 A. Can you rephrase the question? I'm sorry. Or
15 restate it.
16 Q. Yeah. Did Mr. Peacock ever explain to you why it
17 was that BellSouth needed protection from an FCC
18 decision that was consistent with the position that
19 BellSouth has always maintained? Namely, that voice
20 over internet calls should be treated as interLATA?
21 A. What was this -- what was -- I may have missed --
22 still have your question going through incorrectly, but
23 the issue around the voice over internet protocol,
24 obviously we did not want to misrepresent it through

1 switched access arrangements and in an -- attempt to try
2 to obtain local traffic compensation if it were to ride
3 those kinds of arrangements because switched access
4 charges do, indeed, apply to switched access traffic.
5 And since that -- those calls are not literally
6 defined within switched access traffic, as is stated in
7 5.3.3, there was language that was put in place, i.e.,
8 this exception language, to insure that there was no
9 misrepresentation of that over switched access
10 arrangements.
11 Q. Back up for a second. I think we've agreed today
12 already that in your testimony you stated that
13 Mr. Peacock told you that BellSouth wanted that
14 exception language to protect BellSouth in the event
15 that the FCC determined that voice over internet calls
16 were interLATA in nature, correct?
17 A. Correct.
18 Q. And that we've agreed that BellSouth's position is
19 and always has been that such calls are interLATA in
20 nature, correct?
21 A. That is correct.
22 Q. Okay. And my question to you now is: Did
23 Mr. Peacock ever explain to you -- and if you can answer
24 yes or no and then if there's some explanation -- why it

1 was that BellSouth needed protection from an FCC order
2 that would be consistent with BellSouth's position?
3 A. Did he ever explain to me BellSouth's reason for
4 the protection?
5 Q. Why -- did he ever explain to you why it was that
6 BellSouth would need protection from an FCC decision
7 that was consistent with BellSouth's policy?
8 A. Well, obviously, the use of the -- you know,
9 the -- and there were discussions about the ruling
10 regulatory body and changing at the FCC and to the State
11 Commission and so that allowed for those particular
12 ruling bodies, so to speak, to ultimately make a
13 decision. And what was agreed to is that we would not
14 misrepresent it over switched access trunks so that that
15 type of traffic would not be utilized over those
16 switched access arrangements. And that's what was
17 explained to me, is that AT&T could not expect to send
18 VOIP and ISP, or internet service provider, traffic over
19 switched access and expect to classify it as intraLATA
20 even though it was, by definition, within the LATA.
21 Part of what I am responsible for is a big bucket
22 of intrastate minutes that I have to determine which are
23 local, which are intraLATA -- or switched access,
24 rather. And if a call did stay within the LATA, then

1 obviously my reporting process is going to pick that up
2 and so we wanted to insure that those types of calls
3 would not be captured within that reporting process that
4 I deal with. So that's how it related to my
5 involvement, you know, within my discussion with
6 Mr. Peacock.
7 Q. Okay. And let me ask you my question.
8 MR. SHORE: And Commissioner Ervin, I may need
9 to ask for your assistance. I'm not sure I've got an
10 answer to question yet. Maybe it's me, but I don't
11 think so, at least.
12 Q. And my question to you is: Did Mr. Peacock ever
13 explain to you why it was that BellSouth needed
14 protection, supposedly, from an FCC order ruling that
15 internet calls were interLATA, which was BellSouth's own
16 position? Did he ever explain that to you, sir?
17 BY COMMISSIONER ERVIN:
18 Q. In other words, did you ever have a conversation
19 with Mr. Peacock about that specific subject?
20 A. Yes.
21 Q. All right. And what did Mr. Peacock say to you
22 about what was BellSouth's reason?
23 A. And I think I gave the reasoning in my prior
24 explanation.

1 Q. All right. Okay.
2 A. But yes, we had discussion about those two
3 particular issues.
4 COMMISSIONER ERVIN: All right. Mr. Shore, I
5 believe he's answered his question to the extent that --
6 answered your question to the extent he's going to
7 answer it.
8 MR. SHORE: Okay. Fair enough.
9 BY MR. SHORE:
10 Q. Now, BellSouth and AT&T agreed in, I think it's
11 section 5.3.3 -- it's up in there in front of you. I
12 know you can't see it -- of attachment three essentially
13 to agree to disagree on how to treat VOIP calls and
14 agreed to abide by any future FCC orders regarding that
15 issue, correct?
16 A. Correct.
17 Q. Regarding ISP traffic, you're familiar with the
18 FCC's April 27th, 2001 ISP order on remand, right?
19 A. Yes, generally.
20 Q. Do you happen to have that order up there with
21 you?
22 A. No, I do not.
23 Q. Okay. Let me hand you my copy. And I don't
24 intend to introduce this as an exhibit. But with

1 permission to approach I'm just going to hand him the
2 order and ask him to --
3 COMMISSIONER ERVIN: You may approach the
4 witness.
5 (Mr. Shore approaches the witness stand.)
6 BY MR. SHORE:
7 Q. Mr. King, I'm going to show you the FCC's --
8 what's known in the industry as the ISP order on remand
9 in CC Dockets 9698 and 9968 released April 27th, 2001.
10 I'm just going to ask you to read, from paragraph number
11 one, just the part of the sentence that I've highlighted
12 there on page 2. If you'd just read that to Commission.
13 A. I'll read it if you'll give me an opportunity to
14 read the context in which it's placed.
15 Q. Yeah. That's fine.
16 A. Okay. The piece that's been highlighted by
17 Mr. Shore states, "We reaffirm our previous conclusion
18 that traffic delivered to an ISP is predominantly
19 interstate access traffic subject to Section 201 of the
20 act and we establish an appropriate cost recovery
21 mechanism for the exchange of such traffic." That's the
22 portion that's been highlighted. If I may just continue
23 reading through a couple of the pieces here.
24 Q. Sure.

1 (Pause.)
2 A. If I could, Commission, just to continue the next
3 sentence that's stated here, "We recognize that the
4 existing intercarrier compensation mechanism for the
5 delivery of this traffic in which the originating
6 carrier pays the carrier that serves the ISP has created
7 opportunities for regulatory arbitrage and distorted the
8 economic incentives related to competitive entry into
9 the local exchange and exchange access markets."
10 Exactly the reason why I indicated that there was
11 concern and why switched access arrangements would not
12 be deemed appropriate for that traffic.
13 Q. Mr. King, the FCC issued its ISP order on remand
14 reaffirming its previous conclusion that ISP traffic was
15 predominantly interstate prior to the time the parties
16 executed the second interconnection agreement, correct?
17 A. It was not prior to the filing of it, that I'm
18 aware of, or it was right there at the same -- I think
19 it was like April 27th was when we filed the actual, you
20 know, our arbitration or the -- our contract with the
21 Commission.
22 Q. Your petition for arbitration you're referring to,
23 that was April 27th of 2000, correct?
24 A. Okay.

1 Q. And this ISP order on a remand was April 27th,
2 2001, right?
3 A. Correct.
4 Q. And the second interconnection agreement at issue
5 in this case was executed in July 2001, correct?
6 A. But I believe it was filed in April originally,
7 right? I'm -- yes, it was signed and executed on July
8 19th, 2001.
9 Q. And in their July 2001 interconnection agreement,
10 BellSouth and AT&T agreed to implement the FCC's ISP
11 order on remand, correct?
12 A. Correct.
13 MR. SHORE: That's all I have. Thank you,
14 Mr. King.
15 COMMISSIONER ERVIN: All right. Mr. Cauthen,
16 do you have any questions?
17 MR. CAUTHEN: Just a couple.
18 CROSS-EXAMINATION BY MR. CAUTHEN:
19 Q. If you know, sir -- my name's Robin Cauthen. I'm
20 with the Public Staff.
21 A. Okay.
22 Q. If you know, what percentage of AT&T's traffic is
23 switched access?
24 A. From on an intrastate basis?

1 Q. Well, the traffic that you're complaining about
2 not being compensated correctly, is that all switched
3 access?
4 A. It's -- it's -- it's -- it is traffic that is
5 currently being billed switched access that per our
6 interconnection agreement of the -- you know, converting
7 to a LATAwide local concept would be moving from a
8 switched access billing compensation to a local
9 reciprocal compensation.
10 Q. Does that traffic travel over switched access
11 facilities?
12 A. The question -- the -- the minutes in question
13 here are, indeed, traveling over the network put in
14 place by AT&T's long distance arm which, generally, have
15 been provisioned as switched access facilities. Now,
16 let me -- let me also add here that there are provisions
17 within our contract that allow for an appropriations,
18 let me say, of the billing of those facilities.
19 One, you have a PLF which is known as a percent
20 local facility factor. So of that facility that was
21 provisioned as switched access, a factor is developed
22 that determines what part of it is for local, what part
23 of it is for access. Similarly, to the traffic. It is
24 called a percent local usage factor. Generally that PLU

1 and PLF are equivalent because the amount of traffic
2 equates to the percent of traffic that's local which
3 means that percent of the facility is local.
4 So I would add the argument here that that amount
5 of traffic that is subject to the interconnection
6 agreement becomes local traffic and is no longer
7 switched access traffic. That facility that that --
8 those minutes are riding over technically no longer
9 become switched access facilities. They are local
10 facilities now.
11 Q. When you said contract there, you're referring to
12 the contract for the switched access?
13 A. In this case it would be the interconnection
14 agreement contract.
15 Q. You were talking about the interconnection
16 agreement?
17 A. Yes. And I fully appreciate the section E.6 of
18 BellSouth's Switched Access Tariff and that governs
19 their switched access services. In this case, these
20 minutes would not qualify as switched access and be
21 governed by this tariff.
22 Q. Okay. Did it ever occur to you to wonder why, if
23 the purpose of this clause or this section was to
24 protect BellSouth from ISP or VOIP, why that isn't

1 mentioned in it?
2 A. Well, it's mentioned in 5.3.3.
3 Q. It doesn't say ISP, does it?
4 A. It --
5 Q. In the exclusion clause, I mean.
6 A. Right. First of all, you're starting out with a
7 definition of switched access. Okay. First of all, you
8 do start out with the switched access traffic definition
9 and then you do go into discuss unable to agree to voice
10 over internet protocol. So it is, indeed, within this
11 section. And then you end with saying it's interrelated
12 to insure that this traffic does not get misrepresented.
13 Q. Okay. Now, 5.3.1.1, the exception?
14 A. Yes.
15 Q. Was added at BellSouth's insistence, that's your
16 testimony or the testimony of AT&T generally?
17 A. That was added by BellSouth, yes.
18 Q. And it was added to protect BellSouth from a
19 Commission or the FCC deciding that calls to ISPs or
20 VOIP traffic was local or to be compensated as -- at
21 some rate other than included --
22 A. Those calls can technically be within a LATA, the
23 call itself.
24 Q. Right.

1 A. So obviously, BellSouth is concerned that I would
2 try to represent those as local calls.
3 Q. Okay.
4 A. And so I mean -- that is one aspect of -- of -- of
5 the rationale that I wasn't made aware of.
6 Q. If that was the reason for it, why doesn't it say
7 ISP or VOIP calls there? Wouldn't that be a lot
8 simpler?
9 A. Obviously, I'm not the lawyer that would have
10 drawn it up. But I also recognize that these two
11 sections are interrelated; and so to a degree, you know,
12 you can say that they read together.
13 Q. Well, but would it not seem more reasonable to
14 you, if that was what one wanted to exclude, to say that
15 was what one was excluding? Wouldn't that be a simpler
16 way of achieving this?
17 A. Potentially, yes. I would also add, though, that
18 we are providing a switched access definition in this
19 section as well. And so obviously, the exclusion is to
20 address this switched access traffic as -- which, by
21 definition, is interLATA traffic.
22 Q. Now, the switched access traffic, as you said, is,
23 by definition, interLATA?
24 A. Right.

1 Q. And you are excluding it from a group of calls
2 that are, by definition, intraLATA; is that correct?
3 A. Well, there could be different arguments. In the
4 5.3.1.1 that's stated here, it says intraLATA toll
5 traffic will now be treated as local for intercarrier
6 compensation except for those calls. I mean, one could
7 argue that calls in this case is not intraLATA calls but
8 switched access calls.
9 Q. Well, why would it be in that provision, then?
10 Why would you exclude interLATA calls from a collection
11 of intraLATA calls?
12 A. I don't know the answer.
13 Q. Okay. Does that seem illogical to you?
14 A. Again, this was amended, you know, after the
15 contract. We already had, within the Mississippi
16 contract, you know, a true definition of LATAwide. So
17 amending -- you know, obviously I do have concerns with
18 the language from -- from my own purpose, you know,
19 because I have responsibility for these expenses.
20 And again, the only reason that this language made
21 it in was based on the interrelatedness of these two
22 sections and my understanding, from my discussions with
23 the negotiations team, including Mr. Peacock, of what
24 was intended to be meant by that. And so on its face,

1 with the reading as well as the intent that was relayed
2 to me, I agreed to allow that language to be included.
3 Had I known that this case would have -- was bound --
4 you know, was bound to happen, I would have stopped the
5 presses right there and not allowed it. We would have
6 arbitrated the issue. I'm sorry.
7 Q. Would you -- I'm sorry.
8 A. LATAwide local concept, per se, the ability for
9 AT&T, you know, to have local treatment for all LATAwide
10 calls is a very -- you know, one of my top priorities in
11 my, you know, organization. So it is a very big issue.
12 Q. Okay. I can understand that. And for that very
13 reason you would, I would think, want to be very sure
14 that you were clear on what it meant?
15 A. Correct.
16 Q. So -- okay. Do you know offhand of any switched
17 access arrangements that have been established by State
18 Commissions or the FCC? What does that mean?
19 A. Well, first of all, as -- in reference to what I
20 was discussing, the voice over internet protocol, for
21 instance, hasn't really been deemed one jurisdiction or
22 another and so we've agreed to disagree; and so again,
23 these were certain protection clauses to --
24 Q. I think what I'm getting at is what does the word

1 "established" mean there?
2 A. How they rule. How they would --
3 Q. On what question?
4 A. The question of voice over internet protocol,
5 internet service provider, how they generally treat
6 switched access, if they've agreed or ordered on our
7 interconnection agreement. And if they've agreed that
8 local traffic is now to be deemed all intraLATA traffic,
9 then that State Commission has made -- has established
10 that ruling.
11 Q. So a call that's terminated through switched
12 access arrangements that has been defined by a State
13 Commission or by the FCC as being a call that is being
14 originated or terminated by switched access
15 arrangements, those are the calls that are excluded?
16 A. Those calls that remain in the jurisdiction of the
17 State or the FCC would govern the compensation for --
18 for the calls, correct. And as I stated earlier, i.e.,
19 the intraLATA traffic moves to my interconnection --
20 that traffic is now part of my local interconnection
21 agreement and governed by the contract of my
22 interconnection agreement and not -- and would not be
23 governed by the switched access tariff.
24 Q. Okay.

1 A. Which is what the, you know, North Carolina
2 Utilities Commission, you know, governs today.
3 Q. Yeah. I think I --
4 A. And then let me even, you know, add if these are
5 AT&T local customer calls, okay, if it is a BellSouth
6 local customer that has picked AT&T for intraLATA
7 service, that's still access. I mean, that is what
8 access is all about. That's the ability for a customer
9 to pick an LD carrier that may be different from its
10 local carrier and have that traffic routed. And how
11 that happens is through switched access arrangements.
12 And I don't dispute -- I mean, I don't have an
13 issue. I'm willing to pay switched access where I'm
14 just the picked carrier and, you know, I'm -- BellSouth
15 has that local arrangement and I'm just the pick. But
16 if these are my local customers, then they're -- it's my
17 local traffic per my interconnection agreement.
18 MR. CAUTHEN: That's all. Thank you.
19 COMMISSIONER ERVIN: All right. Redirect.
20 MS. CECIL: Yes.
21 <u>REDIRECT EXAMINATION BY MS. CECIL:</u>
22 Q. Mr. King, if you would take your seat because I'm
23 going to ask you some questions about your exhibits to
24 your direct testimony. But first, Mr. Shore asked you a

1 question or two about your role in the interconnection
2 negotiations. And I believe he asked you the question
3 that you were not involved in the negotiations. Do you
4 remember when he asked you that?
5 A. Yes, ma'am.
6 Q. Did you talk with Mr. Peacock on an ongoing basis
7 about the status of the negotiations?
8 A. Most definitely. I'm -- I was as close -- I might
9 as well have been sitting at the table -- hopefully -- I
10 mean, that is how we operate as a process. It's
11 Mr. Peacock's responsibility and his negotiations team
12 to keep me informed on any issues that would affect
13 compensation, which I am responsible for.
14 Q. Would he show you language that had been proposed
15 by BellSouth?
16 A. Yes, he would.
17 Q. Would he show you language he was intending to
18 share with BellSouth?
19 A. Yes, he would.
20 Q. Now, Mr. Shore asked you to take a look at the
21 April 27, 2001 order from the FCC dealing with ISP
22 traffic. Do you remember that?
23 A. Yes, ma'am.
24 Q. And he had you read the section that said that the

1 FCC considered it predominantly interstate. Do you
2 remember that?
3 A. Yes, ma'am.
4 Q. Do you know if the FCC declared that traffic to be
5 interstate in that order?
6 A. No, it does not.
7 Q. Now, would you turn to your direct testimony. And
8 I'd like for you to first look at Exhibit 1 on page 13,
9 section 5.3.1.1.
10 (Pause.)
11 A. Okay.
12 Q. All right. Do you see the underlined language
13 there --
14 A. Yes, ma'am, I do.
15 Q. -- regarding the treatment of ISP and local
16 traffic?
17 A. Yes.
18 Q. Now, can you tell us how that language got into
19 the agreement, from your understanding with your
20 conversations with Mr. Peacock?
21 A. Well, this, again, was as a result of the order on
22 April 27th, 2001 to allow the contract to be amended to
23 include that order.
24 Q. And this says that the parties are going to

1 further amend this agreement within 60 days to
2 incorporate language reflecting that April 27th FCC
3 record, does it not?
4 A. Yes, it does.
5 Q. And the parties eventually agreed on that
6 language. And it's that second amendment that Mr. Shore
7 wrote on the top of his chart, correct?
8 A. That is correct.
9 Q. And there are other provisions from that second
10 amendment that deal with ISP traffic, are there not?
11 MR. SHORE: Mr. Commissioner, I'm going to
12 object. I've let four or five leading questions in a
13 row go on. I want to object to the leading nature.
14 COMMISSIONER ERVIN: Overruled.
15 BY MS. CECIL:
16 Q. If you'll turn to -- if you'll turn, again, still
17 in Exhibit 1 to your direct testimony, to page 20.
18 A. Okay.
19 Q. Do you see at the top there, 5.3.1.1?
20 A. Correct.
21 Q. That's the same provision that Mr. Shore has on
22 the board over there referenced as second amendment, is
23 it not?
24 A. That is correct.

1 Q. Okay. Could you tell us what the provision below,
2 5.3.2, dealt with? The same page.
3 A. That's dealing with ISP bound traffic.
4 Q. Okay. And then turn to the next page of that
5 exhibit, where it says Exhibit 1.
6 A. (Complies with request.)
7 Q. What does section 5.3.3 state?
8 A. "All local and ISP traffic that is exchanged
9 pursuant to this agreement shall be compensated as
10 follows," and it lays out the FCC's ISP schedule on
11 remand.
12 Q. Okay. Now, the rates that are in this particular
13 section, those are not interstate access rates, are
14 they?
15 A. They are not.
16 Q. Okay. Now, he asked you a question also about
17 voice over internet protocol. And he said that that
18 was -- I believe --
19 MS. CECIL: And I don't want to misstate you
20 Mr. Shore, but I believe you said it was BellSouth's
21 position that was interstate traffic, did you not?
22 MR. SHORE: Well, I asked him if that was his
23 understanding. He testified that it was, that's
24 correct.

1 BY MS. CECIL:
2 Q. I'd like for you to turn to your -- I can't have
3 you turn to this. I want to ask you about AT&T's
4 arbitration exhibit that was attached to the original
5 arbitration petition. I'm sorry, Mr. Shore. I don't
6 have an extra copy, but I will look over his shoulder if
7 that's okay.
8 MS. CECIL: I'd like to mark it as AT&T
9 Redirect Exhibit Number 1.
10 COMMISSIONER ERVIN: Does this have something
11 to do with the question asked on --
12 MS. CECIL: Voice over internet protocol.
13 COMMISSIONER ERVIN: Well, I don't believe
14 that just because Mr. Shore mentioned the subject that
15 then opens everything. If it's got something to do with
16 a specific --
17 MS. CECIL: It does, Commissioner. It does.
18 COMMISSIONER ERVIN: Okay. Proceed. Go
19 ahead.
20 MR. SHORE: Commissioner, if I can ask --
21 maybe it's more appropriate to have you ask Miss Cecil.
22 Is that an exhibit to Mr. Peacock's testimony? So I
23 could find it here and don't have to get up there and
24 crowd you and the witness.

1 MS. CECIL: Yes, I think it is an exhibit in
2 Mr. Peacock's testimony. It's issue --
3 COMMISSIONER ERVIN: Which exhibit, Peacock
4 Exhibit 1?
5 MS. CECIL: Exhibit 1.
6 COMMISSIONER ERVIN: All right.
7 AT&T REDIRECT EXHIBIT 1
8 (Identified)
9 MS. CECIL: Mr. King, I'm going to show you
10 what's been marked as AT&T Redirect Exhibit Number 1
11 and --
12 MS. WAY: It's the fourth page of his Exhibit
13 1, fourth page of Exhibit 1.
14 BY MS. CECIL:
15 Q. Ask you to look at item number 18. It deals
16 with --
17 A. This is the arbitration issues matrix. Number 18
18 deals with the question of what is the appropriate
19 treatment of outbound voice calls over internet protocol
20 telephony as it pertains to reciprocal compensation
21 local interconnection attachment 3 section 6.1.9. And
22 then there are two columns that would represent the
23 positions of each party, the AT&T position and the
24 BellSouth position.

1 Q. Now, do you see, in the third column, BellSouth
2 position, there is a statement at the end, voice over
3 internet protocol traffic is switched access traffic and
4 not local traffic, do you see that?
5 A. Yes, I do.
6 Q. That statement doesn't say that BellSouth
7 considered it to be interstate traffic, does it?
8 A. No, it does not.
9 Q. Do you know if BellSouth filed any briefs in the
10 arbitration petition where they took the position that
11 it was interstate traffic? If you know.
12 A. I don't know for sure.
13 MS. CECIL: That's all. Thank you.
14 COMMISSIONER ERVIN: All right. Are there any
15 questions from the Commission? Commissioner Kerr.
16 EXAMINATION BY COMMISSIONER KERR:
17 Q. Let me ask you, first, using Mr. Shore's exhibit,
18 the first sentence, not the underlined part: The
19 parties agree to apply a LATAwide local concept to this
20 attachment three, meaning the traffic that has
21 traditionally been treated as intraLATA toll traffic
22 will now be treated as local for intercarrier
23 compensation purposes.
24 What did you believe AT&T -- what was the benefit

1 to your company of that language? What were you getting
2 that you had not previously gotten from that language?
3 A. Well, I technically, previously, already had that
4 language in Mississippi.
5 Q. Right. But let's confine it to North Carolina.
6 A. So but, you know, what I have there is the ability
7 to have a reduced expense stream on my intraLATA minutes
8 in which I can share to my clients, my business unit
9 clients in order to put better products in place, local
10 products, et cetera, to offer the North Carolina
11 consumers.
12 Q. If you and I were negotiating that and I
13 understood that to not include -- in other words, we
14 were going to treat -- this new LATAwide concept was not
15 going to include any call that went over switched access
16 facilities?
17 A. Okay.
18 Q. What would be left that -- that you previously
19 didn't have that you were getting if you threw out
20 anything that was switched or went over switched access
21 facilities?
22 A. What would I have -- well, according to
23 BellSouth's interpretation --
24 Q. What would you be getting? If we adopted

1 Mr. Shore's --
2 A. I would not have any local compensation at all if
3 I was using a switched access service.
4 Q. If Mr. Shore's correct, if his interpretation is
5 correct, were you getting anything from that first
6 sentence?
7 A. I -- yes. I was already getting something from
8 that first sentence. I was already using switched
9 access arrangements in my existing network in which I
10 was terminating local calls.
11 Q. Right. Right.
12 A. I was applying a PLU. What the LATAwide expansion
13 offered me was obviously to put more calls. It was not
14 just the traditional 7- and 10-digit dialed calls going
15 across the street and calling your neighbor. Now you
16 could call outside the so-called BellSouth traditional
17 local calling area but still within the LATA. It was
18 the traditional toll call, just as we stated. What was
19 once traditionally toll is now local for intercarrier
20 compensation.
21 Q. And that's what you believed you were getting from
22 that LATAwide?
23 A. Yes, sir.
24 Q. Okay. Now, if Mr. Shore's correct, was -- would

1 you have -- would you be getting anything that you
2 didn't already have? You know, if you excluded --
3 A. I would actually be going backwards. Because
4 according to BellSouth, I would have to reconfigure my
5 network to where if I indeed want to have this type of
6 compensation, I'd have to redirect calls that I am today
7 sending them and redirect them to different trunk groups
8 that they are claiming are not switched access and are
9 willing to give me this LATAwide concept.
10 COMMISSIONER KERR: That's all I have. Thank
11 you.
12 COMMISSIONER ERVIN: All right. Are there any
13 further questions from the Commission? If not, are
14 there any questions based on Commissioner Kerr's
15 questions? All right.
16 MR. SHORE: I've got a couple of questions
17 based on Commissioner Kerr's questions.
18 COMMISSIONER ERVIN: All right. Mr. Shore.
19 RECROSS-EXAMINATION BY MR. SHORE:
20 Q. Mr. King, Commissioner Kerr asked you what the
21 benefit was to a LATAwide local concept. And I think
22 you said it something to the effect -- I'm
23 paraphrasing -- allowed you to offer benefits to your
24 consumers so that calls that were to consumers,

1 traditionally intraLATA toll calls, would be local. And
2 I think -- and you said for intercarrier compensation
3 purposes. Did I get that right?
4 A. I -- yes. I stated that those calls would now be
5 for intercarrier compensation purposes at a lower
6 expense that I could share with my -- I could share that
7 savings with my business units for them to offer, you
8 know, in their products to their consumers.
9 Q. But AT&T would not be obligated to give its -- to
10 include that in its customers' local calling plan. In
11 other words, AT&T could still charge its customer for a
12 toll intraLATA call but only have to pay reciprocal
13 compensation rather than switched access, correct?
14 A. Obviously they could have that option. I am not
15 in the pricing organization. I provide them their
16 underlying unit costs.
17 Q. Just one more issue. You said something in
18 response to Commissioner Kerr's question that you would
19 have to -- you'd have to reconfigure your network but
20 today you could put intraLATA calls over switched access
21 facilities. You could put those calls over local
22 facilities, correct?
23 A. If I reconfigured my network.
24 Q. If you used switched access facilities, as you've

1 configured your network, you still pay BellSouth but you
2 just have to pay them at higher rates, at least
3 according to BellSouth's interpretation, correct?
4 A. The calls are still being completed, but I would
5 be paying higher charges, correct.
6 MR. SHORE: That's all I have.
7 COMMISSIONER ERVIN: All right. Any further
8 questions on Commissioner Kerr's questions.
9 (No response.)
10 If not, Mr. King, you I think have completed
11 your ordeal for this proceeding and you may be excused.
12 THE WITNESS: Thank you.
13 (WITNESS EXCUSED)
14
15 COMMISSIONER ERVIN: It's now 11:00 o'clock
16 and time for our morning recess. We'll take a
17 ten-minute break and reconvene at 11:10 by the clock on
18 the back of the hearing room wall; and at that time, I
19 assume we will be proceeding with Mr. Peacock or Miss
20 Stevens?
21 MS. CECIL: No. We're going to call Miss
22 Stevens next.
23 COMMISSIONER ERVIN: Miss Stevens. All right.
24 Thank you.

(A RECESS WAS TAKEN.)

All right. Let's come back on the record, please. Miss Cecil, if you'll call your next witness, please.

MS. CECIL: AT&T calls Roberta Stevens.

COMMISSIONER ERVIN: Miss Stevens, if you'll come up and join us. Place your left hand on the Bible and raise your right hand.

ROBERTA STEVENS; Being first duly sworn, testified as follows:

Sit back and make yourself at home and somebody will tell you what to do.

THE WITNESS: Okay.

DIRECT EXAMINATION BY MS. CECIL:

Q. Miss Stevens, would you state your full name and business address for the Commission's record.

A. Roberta Stevens, 567 Cascade Drive, Lilburn, Georgia 30047.

Q. Are you the same Roberta Stevens who filed 8 pages of rebuttal testimony on behalf of AT&T on January 17, 2003 in this proceeding?

A. Yes, I am.

Q. Do you have any changes to that testimony?

A. Yes, I do.

1 Q. Would you please give those to the Commission.
2 A. On page 5, line 11, it should read "at page 5
3 lines 10 through 14." The next change occurs at page 6,
4 line 3. It should read, "signed second interconnection
5 agreement on July 19th, 2001."
6 COMMISSIONER WILKINS: Repeat that date,
7 please.
8 THE WITNESS: I'm sorry. It is July 19th,
9 2001. And my testimony says 2002.
10 COMMISSIONER ERVIN: For those of us who were
11 here during the arbitration, it's hard to forget it.
12 A. My final change is on page 8, line 7. It should
13 read, "there is a section in the second interconnection
14 agreement." Those are all my changes.
15 BY MS. CECIL:
16 Q. Miss Stevens, if I asked you the same questions
17 today as in your testimony of January the 17th, would
18 your answers to those questions be the same today?
19 A. Yes, they would.
20 MS. CECIL: Commissioner, we'd like to move
21 for the admission of Miss Stevens' rebuttal testimony.
22 COMMISSIONER ERVIN: And Ms. Stevens'
23 testimony will be admitted into the record subject to
24 the objection that you previously lodged and my ruling

on it.

(REPORTER'S NOTE: The prefiled rebuttal testimony of Roberta Stevens will be reproduced in the record at this point the same as if the questions had been orally asked and the answers orally given from the witness stand.)

copy

FILED

AT&T COMMUNICATIONS OF THE SOUTHERN STATES, LLC,
TELEPORT COMMUNICATIONS GROUP, INC., AND
TCG OF THE CAROLINAS, INC.
REBUTTAL TESTIMONY OF ROBERTA STEVENS
BEFORE THE NORTH CAROLINA UTILITIES COMMISSION
DOCKET NO.: P-55, Sub 1376
JANUARY 17, 2003

Q. PLEASE STATE YOUR NAME, TITLE, AND BUSINESS ADDRESS.

A. My name is Roberta Stevens. I am a Manager in the Local Services & Access Management organization of AT&T Corp. ("AT&T"). My business address is 567 Cascade Drive, Lilburn, GA 30047.

Q. FOR WHOM ARE YOU FILING TESTIMONY IN THIS PROCEEDING?

A. I am testifying on behalf of AT&T Communications of the Southern States, LLC, Teleport Communications Group, Inc., and TCG of the Carolinas, Inc. (collectively referred to as "AT&T").

Q. HAVE YOU PREVIOUSLY TESTIFIED IN OTHER REGULATORY PROCEEDINGS?

A. No.

1 Q. PLEASE PROVIDE A BRIEF DESCRIPTION OF YOUR EDUCATION
2 AND EXPERIENCE.
3
4 A. I received a Bachelor of Business Administration degree from
5 Georgia State University in 1992. My twenty-five (25) year career
6 in telecommunications began in July of 1977 with Southwestern
7 Bell in Tulsa, Oklahoma, where I held various positions in
8 Business and Consumer Marketing. I joined AT&T in 1984 and
9 have held positions in Consumer Marketing, External Affairs, State
10 Government Affairs, and Local Services and Access Management.
11 In February of 2001, I joined AT&T's Local Services and Access
12 Management organization to assist in AT&T's negotiation of new
13 Interconnection Agreements between AT&T and BellSouth
14 Telecommunications Inc. ("BellSouth") for AT&T's nine Southern
15 Region states. I participated (and continue to participate) on a
16 cross-functional team whose objective is to negotiate contract
17 terms and conditions that allow AT&T to obtain all the services,
18 features and functionalities guaranteed under the
19 Telecommunications Act of 1996 ("Act") and subsequent orders,
20 rules and implementing regulations of the Federal
21 Communications Commission ("FCC").
22
23 Q. WHAT IS THE PURPOSE OF YOUR TESTIMONY?
24

1 A. My testimony responds to the Direct Testimony filed by
2 Elizabeth R. A. Shiroishi on December 18, 2002 on behalf of
3 BellSouth Telecommunications, Inc. ("BellSouth") regarding
4 various discussions which she states took place between AT&T and
5 BellSouth in the context of negotiations for Second Interconnection
6 Agreement.
7
8 Q. WERE YOU A MEMBER OF THE AT&T NEGOTIATIONS TEAM?
9
10 A. Yes, I was. I joined the team in February 2001, reporting to
11 Mr. Billy C. Peacock, AT&T's lead negotiator with BellSouth. I
12 remain a part of this team and continue to work on various
13 interconnection issues with BellSouth.
14
15 Q. WHAT ARE YOUR RESPONSIBILITIES?
16
17 A. I assist Mr. Peacock in organizing documents and materials
18 utilized in the negotiations, including retaining and cataloguing
19 various versions of contract language exchanged between the
20 parties; I attend negotiations meetings and conference calls and
21 make notes of discussions which occur during these meetings; I
22 coordinate with various AT&T "subject matter experts" regarding
23 the status of negotiations and arrange for their review of proposed
24 contract language; I keep logs and matrixes of "open" and "closed"
25 contract language; and finally I assist with the preparation of

1 arbitration petitions filed with the state commissions. In this
2 respect, I assisted with the preparation of AT&T's arbitration
3 petition filed with the Commission.
4
5 Q. FROM THE TIME THAT YOU JOINED THE AT&T NEGOTIATIONS
6 TEAM IN FEBRUARY, 2001, HOW FREQUENTLY DID YOU
7 ATTEND NEGOTIATIONS MEETINGS AND CONFERENCE CALLS
8 BETWEEN AT&T AND BELLSOUTH?
9
10 A. From February, 2001 until AT&T's negotiations with BellSouth
11 were concluded, I attended practically all of the negotiations
12 meetings and conference calls between AT&T and BellSouth.
13
14 Q. WAS IT PART OF YOUR RESPONSIBILITY TO MAKE NOTES
15 DURING THESE MEETINGS AND CONFERENCE CALLS?
16
17 A. Yes.
18
19 Q. DID YOU MAKE NOTES DURING THESE MEETINGS AND
20 CONFERENCE CALLS?
21
22 A. Generally yes. However, if we had a conference call or meeting
23 that involved a limited issue, I may not have made notes, but
24 instead may have made notations on the "red-lined" version of the

interconnection agreement, and/or made notations on the tracking matrix for our interconnection agreement negotiations

Q. DO YOU REMEMBER BEING PRESENT AT MEETINGS OR CONFERENCE CALLS WHERE MS. SHIROISHI ALSO WAS PRESENT?

A. Yes. She attended many of the negotiating meeting and conference calls which I attended.

Q. AT PAGE 5, LINES 110-14, MS. SHIROISHI STATES "IN THE COURSE OF THESE DISCUSSIONS, THE PARTIES DISCUSSED THE FACT THAT THIS REFERENCE [EXCEPT FOR THOSE CALLS THAT ARE ORIGINATED OR TERMINATED THROUGH SWITCHED ACCESS ARRANGEMENTS AS ESTABLISHED BY THE STATE COMMISSION OR FCC] WAS TO THE SWITCHED ACCESS ARRANGEMENTS THAT ARE OFFERED FOR PURCHASE THROUGH EACH PARTY'S SWITCHED ACCESS TARIFFS, WHICH ARE APPROVED BY THE STATE COMMISSION (FOR INTRASTATE SWITCHED ACCESS] OR THE FCC [FOR INTERSTATE SWITCHED ACCESS." DO YOU EVER REMEMBER BEING IN A MEETING, OR ON A CONFERENCE CALL, WHEN MS. SHIROISHI, OR ANYONE ELSE FROM BELLSOUTH, MADE SUCH STATEMENTS?

1 A. No. Not during the timeframe in question. I do remember her
2 making such a statement, but it was only ***after*** the parties had
3 signed Section Interconnection Agreement on July 19, 2002, and it
4 was only when BellSouth began providing its "interpretation" of
5 what constituted "Local Traffic" under Second Interconnection
6 Agreement. My notes reflect that she made such statements at a
7 meeting between the parties on November 16, 2001.
8
9 Q. RATHER THAN RELYING SOLELY ON YOUR MEMORY, DID YOU
10 CHECK YOUR MEETING OR CONFERENCE CALL NOTES TO
11 DETERMINE WHETHER YOU EVER RECORDED THAT MS.
12 SHIROISHI, OR ANYONE ELSE FROM BELLSOUTH, MADE SUCH
13 STATEMENTS?
14
15 A. Yes I did. But again, I found no entries in my notes where I had
16 recorded that such statements were made by Ms. Shiroishi or
17 anyone else from BellSouth before the parties signed Second
18 Interconnection Agreement on July 19, 2001.
19
20 Q. AT PAGE 5, LINES 22-25, MS. SHIROISHI STATES "...WE HAD
21 EXTENSIVE DISCUSSION ABOUT THE EXCLUSION OF TRAFFIC
22 THAT ORIGINATED OR TERMINATED THROUGH SWITCHED
23 ACCESS ARRANGEMENTS. IN THE COURSE OF THOSE
24 DISCUSSIONS, WE DREW DIAGRAMS ON THE WHITEBOARD
25 AND SPECIFICALLY DISCUSSED THE CALLS THAT TRAVERSED

1 SWITCHED ACCESS ARRANGEMENTS AND THE FACT THAT
2 THEY WOULD BE EXPRESSLY EXCLUDED FROM THE
3 DEFINITION OF LOCAL TRAFFIC." DO YOU RECALL MS.
4 SHIROISHI, OR ANYONE ELSE FROM BELLSOUTH, MAKING
5 SUCH STATEMENTS OR "DRAWING SUCH DIAGRAMS ON THE
6 WHITEBOARD"?
7
8 A. No.
9
10 Q. DID YOU CHECK YOUR MEETING NOTES TO SEE IF YOU
11 RECORDED ANY OF THESE STATEMENTS OR REFERENCED
12 THE DRAWING OF DIAGRAMS?
13
14 A. Yes. Although I found no recorded statements, my meeting notes
15 regarding a meeting of June 6, 2001, state: "Local channel and
16 dedicated Transport Definition—Bill to get with Dave Talbott to
17 discuss BST explanation. Sam drew out BST diagrams."
18
19 Q. PLEASE IDENTIFY "BILL," "DAVE TALBOTT," AND "SAM" FROM
20 YOUR JUNE 6, 2001 MEETING NOTES.
21
22 A. "Bill" refers to Bill Peacock; "Dave Talbott" refers to AT&T's subject
23 matter expert on network architecture and "Point of
24 Interconnection;" "Sam" refers to Sam Benenati, my peer on the
25 negotiations team.

Q. REGARDING THE TERMS "LOCAL CHANNEL AND DEDICATED TRANSPORT" FROM YOUR JUNE 6, 2001 MEETING NOTES, TO WHAT SECTIONS OF SECOND INTERCONNECTION AGREEMENT DO THOSE TERMS APPLY?

A. There is a section in Section Interconnection Agreement titled Network Interconnection. This section has two sub-sections 1.10 and 1.12. In my handwritten notes, and in the version of Second Interconnection Agreement which we were negotiating at the time, the sub-section references were 1.9 and 1.11. These sub-sections apply to discussions the parties were having regarding network architecture and "Point of Interconnection" and not the definition of "switched access arrangements."

Q. ARE YOU AWARE OF ANY OTHER REFERENCES IN MS. SHIROISHI'S TESTIMONY REGARDING DISCUSSIONS BETWEEN AT&T AND BELLSOUTH WHICH YOU HAVE NOT ADDRESSED IN YOUR TESTIMONY?

A. No.

Q. DOES THIS CONCLUDE YOUR TESTIMONY?

A. Yes.

BY MS. CECIL:

Q. Have you prepared a summary of your testimony?

A. Yes, I have.

Q. Would you provide it, please.

(REPORTER'S NOTE: The written summary of Roberta Stevens will be reproduced in the record at this point the same as given orally by Ms. Stevens from the witness stand.)

North Carolina Utilities Commission
Docket No. P-55, Sub 1376

Summary of Rebuttal Testimony of Roberta Stevens

Good Morning Commissioners. My name is Roberta Stevens and I am employed by AT&T Corp. I first joined AT&T in 1984 holding various positions in consumer marketing, external affairs, state government affairs and most recently, AT&T's Local Services and Access Management organization. Before joining AT&T in 1984, from 1977 to 1984, I worked for Southwestern Bell in various business and consumer marketing organizations. All totaled, I have over 25 years experience in the Bell System and the telecommunications industry.

In February 2001, I joined Bill Peacock's team supporting AT&T's interconnection negotiations with BellSouth.

In this position, I am responsible for organizing documents and materials utilized in the negotiations and retaining and cataloging various versions of contract language that ~~exchanged between~~ the parties exchanged. I attend negotiations meetings and conference calls and make notes of discussions which occur during these meetings. I also coordinate with various AT&T "subject matter experts" regarding the status of negotiations and arrange for their review of proposed language; I keep matrices of "open" and "closed" contract language; and finally I assist in arbitration proceedings before the State Commissions.

My testimony responds to the direct testimony of BellSouth's Beth Shiroishi, regarding various discussions which she states took place between AT&T and BellSouth regarding the North Carolina Interconnection Agreement signed by the parties on July 19, 2001.

From February 2001 (when I first joined Mr. Peacock's team) throughout the remainder of the negotiations period, I attended practically all of the negotiation meetings and conference calls where I was the AT&T note taker. Accordingly, I attended meetings and conference calls which Ms. Shiroishi attended. I made notes of these meetings and conference calls on a routine basis.

In her direct testimony Ms. Shiroishi claims that AT&T and BellSouth had extensive discussions about the exclusion of traffic that originated or terminated through switched access arrangements and that during those discussions BellSouth drew diagrams on ~~the~~ A whiteboard. According to Ms. Shiroishi, BellSouth specifically discussed the calls that traversed switched access arrangements and the fact that they would be expressly excluded from the definition of "Local Traffic."

I never remember being in a meeting or on a conference call when Ms. Shiroishi, or anyone else from BellSouth, made any such statements prior to the execution of the interconnection agreement on July 19, 2001. My notes reflect that AT&T and BellSouth had a meeting on June 6, 2001 where

diagrams were drawn, but these diagrams specifically related to network architecture and "Point of Interconnection," two (2) open issues that AT&T and BellSouth were still negotiating. Neither of these issues related to what constituted "Local Traffic" under the terms of the Interconnection Agreement executed by the parties.

Moreover, my notes reflect that Ms. Shiroishi only made Bellsouth's position on the exclusions from what constituted local traffic known on November 16, 2001. In concluding that Ms. Shiroishi did not make such statements between February 2001 through July 19, 2001, I did not rely solely on my memory. I also checked my notes and found no entries where I had recorded that Ms. Shiroishi had made such statements during this period.

This concludes my summary. Thank you.

1 MS. CECIL: The witness is available for
2 cross-examination.
3 COMMISSIONER ERVIN: Mr. Shore.
4 MR. SHORE: Thank you.
5 MR. SHORE: Good morning, Miss Stevens.
6 COMMISSIONER ERVIN: Unless you're going to
7 make Mr. Rankin do a little work.
8 MR. SHORE: Well, you okay with me?
9 MR. RANKIN: I just carry his bags.
10 MR. SHORE: Hardly.
11 CROSS-EXAMINATION BY MR. SHORE:
12 Q. I'm Andrew Shore. I represent BellSouth, Miss
13 Stevens, as you know from your deposition. It seems
14 like just yesterday. I guess it almost was.
15 A. Almost.
16 Q. I need to ask you some questions about your sworn
17 testimony in this case. You joined the AT&T negotiating
18 team negotiating the second interconnection agreement
19 with BellSouth in February of 2001?
20 A. I joined the team in February 2001 and we were
21 negotiating several contracts at one time.
22 Q. And your duties, as they pertained to
23 interconnection agreement negotiations, are
24 administrative in nature, correct?

1 A. Correct.
2 Q. You don't participate in the substantive
3 negotiations, right?
4 A. Not usually. Bill Peacock is our lead negotiator.
5 Q. Okay. Would it be fair to say that you don't get
6 involved in the substantive negotiations?
7 A. At the table with BellSouth and other parties,
8 that would be correct.
9 Q. Now, as BellSouth and AT&T negotiated the
10 interconnection agreement, they exchanged red-lined
11 versions of the agreement to show competing language and
12 proposals and also reflect what they've already agreed
13 to, correct?
14 A. Correct.
15 Q. And one of your job responsibilities is to keep
16 the current red-lined version for AT&T, right?
17 A. It's to -- it's to document what conversations
18 took place during that negotiating session. So it would
19 represent what BellSouth's proposed changes were, as
20 well as AT&T's. I think you asked me if my
21 responsibility was only on behalf of AT&T's.
22 Q. I asked it that way because you work for AT&T, but
23 anyway, can we agree you're the person at AT&T that's
24 responsible for keeping the current red-lined version of

1 the agreement?
2 A. Yes.
3 Q. And one of your other responsibilities is to take
4 notes at interconnection negotiations, right?
5 A. Correct.
6 Q. I think you mentioned, or at least referred to it
7 in your summary, Mr. Peacock, sitting right over there
8 next to Miss Cecil, he's your boss, right?
9 A. Correct.
10 Q. And he's been your boss since you joined the
11 negotiating team back in 2001, right?
12 A. Yes, he has.
13 Q. Mr. Peacock was the person that told you he wanted
14 you to file testimony in this case, right?
15 A. Correct.
16 Q. And he told you that they needed your testimony
17 because you were the official note taker, right?
18 A. Correct.
19 Q. Let's talk about your note taking, then. There
20 are no written guidelines that instruct you on what
21 you're supposed to take notes on in the interconnection
22 agreement negotiations, true?
23 A. No written guidelines that I am aware of.
24 Q. And Mr. Peacock, when you joined the team, or at

1 any time thereafter, never gave you any instructions on
2 how to take notes or what to take notes about in the
3 negotiations, correct?
4 A. I'm experienced in taking notes, so I didn't feel
5 that was necessary.
6 Q. The answer to my question was, no, Mr. Peacock
7 didn't give you any such instructions?
8 A. No. He didn't need to.
9 Q. And Mr. Peacock, it wasn't his practice to review
10 your notes after negotiating sessions to ensure that
11 they were accurate or comported with his memory of the
12 meetings, correct?
13 A. We -- the only time that we would compare notes,
14 if you will, is if we were in the process of proposing
15 language back to BellSouth and I wanted to make sure
16 that the red line -- he would look at the red-lined
17 version, if you will, before it went back to BellSouth.
18 So in that respect.
19 Q. Just as a matter of course, after every meeting
20 you didn't give your notes to Mr. Peacock for him to
21 approve or to tell you that, okay, they look consistent?
22 A. No, I did not.
23 Q. Okay. Now, you testified at your deposition, two
24 days ago, that your practice was to take notes on what

1 you called key issues, correct?
2 A. Correct.
3 Q. And you also testified that no one tells you what
4 the key issues are?
5 A. Can you refer me to -- you're talking about in my
6 deposition?
7 Q. Yeah. Do you have that up there with you?
8 A. I do.
9 Q. On page 20.
10 A. Okay.
11 Q. On line 10. Let me know when you get there.
12 A. I am there.
13 Q. Okay. See where I asked you the question, "Who
14 tells you what the key issues are?"
15 A. I do see it.
16 Q. What was the answer you gave there?
17 A. "Nobody."
18 Q. Another thing you told me at your deposition the
19 other day was that the definition of local traffic was
20 never a key issue during the parties' negotiations in
21 2001, right?
22 A. During the negotiations of the North Carolina
23 agreement local traffic was never discussed.
24 Q. And it wasn't a key issue, according to you,

1 correct?
2 A. It was not an issue that the parties were
3 negotiating.
4 Q. And your testimony at your deposition was that it
5 wasn't a key issue; is that right, Miss Stevens?
6 MS. CECIL: Can you give her a reference to
7 the deposition?
8 MR. SHORE: I'm just asking her if she
9 remembers from Monday.
10 A. No. I would rather look at it.
11 BY MR. SHORE:
12 Q. Okay. If you look at page 24.
13 A. Okay.
14 Q. Up on line 4, I asked you, "At any time after you
15 joined the team, through the time the parties signed the
16 agreement in July of 2001, was the definition of local
17 traffic a key issue?" What was your answer?
18 A. My answer was "no," and it continues to be no.
19 Q. Okay. And then -- okay. Good. And you said, "It
20 wasn't an open issue that the parties were negotiating
21 in 2001." That's your testimony as well, correct?
22 A. It was not an open issue that the parties were
23 negotiating.
24 Q. And that you didn't have any recollection of

1 BellSouth proposing a definition of local traffic after
2 you joined the team in 2001, correct?
3 A. That is correct.
4 MR. SHORE: Let me pass out what we'd like to
5 be identified as BellSouth Cross -- is it only 2?
6 COMMISSIONER ERVIN: All right.
7 MR. SHORE: I shouldn't be confused yet.
8 BELLSOUTH CROSS EXHIBIT NUMBER 2
9 (Identified)
10 Q. Miss Stevens, Cross-examination Exhibit 2 is the
11 same document that we identified at your deposition as
12 Deposition Exhibit Number 3. It's a document entitled
13 attachment 3, and it has a date written down at the
14 bottom of -- in handwriting -- of 5/22/01. Do you see
15 that?
16 A. Yes, I do.
17 Q. That's your handwriting?
18 A. Yes, it is.
19 Q. And you did that -- you wrote that date to reflect
20 that this was a red-lined version of attachment 3 to the
21 interconnection agreement that AT&T received from
22 BellSouth on May 22nd of 2001, correct?
23 A. I don't know that we received it from BellSouth on
24 May 21st. It was very confusing in the beginning

because when red lines were sent to us from BellSouth, they wouldn't -- they'd have original dates on them. And so as the keeper of records, it was very difficult for me to keep track of what version we were supposed to be working from. So I made it a practice of writing down the date that we were discussing these issues.

Q. Okay. And in this case that date was May 22nd, '01, right?

A. Correct.

Q. Turn to page 20 of that exhibit, the section 5.3.1.

A. Yes.

Q. Okay. And the bold underlined language there, that was to reflect the new language proposed by BellSouth, correct?

A. It's hard to say from a black and white copy, but I'm assuming --

COMMISSIONER ERVIN: I'm sorry. Mr. Shore, when you say "the bold language," which bold language?

MR. SHORE: I'm sorry. In section 5.3.1.1. I think that whoever highlighted it, the 5.3.1.1 part looks like it's crossed out on this copy.

COMMISSIONER ERVIN: My problem is I can't see any number at all. Are you talking about the for

1 reciprocal compensation between the parties, the first
2 paragraph at the top?
3 MR. SHORE: Yes, sir. That's right.
4 COMMISSIONER ERVIN: Okay. I'm sorry to
5 interrupt you.
6 A. I believe that is BellSouth's red line back to us.
7 BY MR. SHORE:
8 Q. And when you say "BellSouth's red line," it would
9 be language BellSouth was proposing to AT&T?
10 A. Correct.
11 Q. Miss Stevens, can we agree, subject to check --
12 and please, if you'd like to look, go right ahead --
13 that there's nothing in this May 22nd version of
14 attachment 3 that says that the parties will settle
15 their dispute regarding ISP traffic by incorporating the
16 FCC's ISP order on remand?
17 A. And I'm sorry. Are you asking me if it's in this
18 paragraph that you referenced?
19 Q. No. No, ma'am. Is it anywhere in this attachment
20 3? Can we agree, subject to check -- and if you want to
21 check, go ahead, if you don't want to agree with me.
22 Because that's something you could check later. That
23 might speed things up, but that's your decision.
24 A. I'm sorry. Could you please ask the question

again?

Q. Yes, ma'am. And why don't I narrow it down. Why don't I just ask if you would agree with me that there's nothing in section 5.3 of this May 22nd attachment that says that the parties will settle or agree to treat ISP traffic in accordance with the FCC's April 2001 ISP order on remand?

A. Subject to check, I would have to -- I'll agree. I would have to read the whole thing to make sure.

Q. Okay. I understand. Can we also agree there's nothing in this attachment 3 that addresses voice over internet protocol calls? Again, I'll ask you that subject to check.

A. Subject to check, I would agree with that.

Q. There's several places in this document where "okay" is written in the margin, right?

A. Correct.

Q. And that's your writing, writing the okays, correct?

A. Correct.

Q. And what you told me at your deposition the other day was when you wrote okay next to a provision, that was to indicate that the parties agreed to that language, correct?

A. At that time.

Q. Now, let me hand you another exhibit that we'll ask to be identified as BellSouth Cross Exhibit Number 3. And that is the version of attachment 3 dated 6/12/01. And it's the same document we called Exhibit 4 at your deposition.

A. Okay.

COMMISSIONER ERVIN: Let the exhibit be so identified.

BELLSOUTH CROSS EXHIBIT NUMBER 3

(Identified)

BY MR. SHORE:

Q. Okay. Miss Stevens, there's also a lot of okays in the margins of this version of attachment 3, right?

A. Yes, there are.

Q. And that's your handwriting as well, correct?

A. Correct.

Q. Can you turn to page 26 of this document, specifically section 5.4.2. It's entitled, compensation for intraLATA toll traffic. Do you see that?

A. I do see it.

Q. Can you read the first sentence of that to the Commission, please.

A. Are you talking about the heading or the sentence

1 after the heading?
2 Q. The sentence after the heading.
3 A. "For terminating its intraLATA toll traffic on the
4 other party's network, the originating party will pay
5 the terminating party's intrastate or interstate
6 terminating switched access rates as set forth in the
7 effective intrastate or interstate access services
8 tariff, whichever is appropriate."
9 Q. You wrote okay next to that paragraph, right?
10 A. I did.
11 MS. CECIL: I'm sorry. Could I get a
12 reference on that? I didn't follow where you were.
13 MR. PEACOCK: Here it is (indicating).
14 COMMISSIONER ERVIN: It's on page 26 of the
15 document. It's paragraph 5.4.2.
16 MS. CECIL: Thank you, Commissioner.
17 BY MR. SHORE:
18 Q. Now, Miss Stevens, I think just one more. I
19 wanted to show you another version --
20 A. And if I may clarify. Okay may have meant that
21 the parties were okay at that moment with the language.
22 Q. I want to show you another version of attachment 3
23 that we didn't identify at your deposition the other
24 day.

1 MR. SHORE: And I think we're up to BellSouth
2 Cross Exhibit 4.
3 COMMISSIONER ERVIN: That's my understanding.
4 And we'll mark this document as BellSouth Cross Exhibit
5 Number 4.
6 BELLSOUTH CROSS EXHIBIT NUMBER 4
7 (Identified)
8 BY MR. SHORE:
9 Q. Miss Stevens, I want to direct your attention to
10 the section 5.3, interconnection compensation, that
11 begins on page 24. And I've got two questions. I guess
12 they're identical to the questions I asked you about
13 another document a few minutes ago.
14 A. And I'm sorry. What page did you say?
15 Q. Page 24.
16 A. Okay.
17 Q. And I'll -- I guess, first, let me identify this
18 attachment 3 that's connected to these e-mails. The
19 e-mails are from Michael Willis. That's a woman at
20 BellSouth, correct?
21 A. Yes, it is.
22 Q. To B. Peacock. That's Mr. Peacock, your boss?
23 A. Correct.
24 Q. Okay. And attached to those are an attachment 3.

1 And the date on that, down at the bottom, is 7/11/01?
2 A. Correct.
3 Q. Now, if you turn to section 5.3, can we agree,
4 subject to your check, that there's nothing in this
5 document that says that the parties will agree to deal
6 with ISP traffic in accordance with the FCC's April 2001
7 ISP order on remand?
8 (Pause.)
9 A. There's some reference to it in the disagree on
10 5.3.1.7, but there's some reference to internet protocol
11 telephony.
12 Q. My question was: Is there any reference to the
13 FCC's ISP order on remand of April 27th, 2001?
14 A. In -- in a further paragraph, yes, there is.
15 In -- and it's marked out, but the paragraph -- I guess
16 it's 5.3.1 possibly. I'm not sure what the number is,
17 but it's titled switched access traffic on page 26.
18 Q. Does that paragraph -- I see it there. Does that
19 reference the FCC's ISP order on remand?
20 A. It mentions that the parties agreed to abide by
21 any effective and applicable FCC rules and orders, et
22 cetera.
23 Q. All right. That's dealing with voice over
24 internet protocol calls, right?

1 A. That is correct.
2 Q. That's a separate issue from what's known as ISP
3 traffic?
4 A. Correct.
5 Q. Just to go back, then. Nothing in paragraph 5.3
6 mentions the FCC's ISP order on remand, right?
7 A. Subject to check, no.
8 Q. Okay. On Page 7 of your testimony, on lines 14
9 through 17, you say that your meeting notes from a
10 meeting with BellSouth on June 6th, 2001 state and then
11 you have a couple of sentences there in quotations. Do
12 you see that?
13 A. I do.
14 Q. And you told me, at your deposition, that the
15 quotation -- the words you put in quote marks, on page 7
16 of your testimony, those were from your meeting notes?
17 A. Correct.
18 Q. Now, do you have your meeting notes up there with
19 you?
20 A. I have the exhibit that we provided at my
21 deposition, the copy, yes.
22 Q. That was Exhibit 1 to your deposition, right?
23 A. Yes, it was.
24 Q. Okay. And we had -- we agreed, at your

1 deposition, that Exhibit 1 contained all of the notes
2 that you made in interconnection meeting negotiations
3 with BellSouth that you attended, correct, as well as
4 some internal notes?
5 A. As well as internal notes -- meetings -- excuse
6 me. Notes from internal meetings as long as there was
7 not an attorney present.
8 Q. Right. Okay. Now, the meeting notes from June
9 6th, 2001 start on page -- a page that has 216 up at the
10 top, correct?
11 A. Correct.
12 Q. Can you show me -- can you point to the place in
13 your meeting notes from June 6th, 2001 where the quote
14 that you say came out of your meeting notes on page 7 of
15 your testimony is?
16 (Pause.)
17 A. The reference would be in -- on page 216, as you
18 pointed out, where I've noted 1.9 and 1.11. In this
19 particular meeting -- and I can't say why I did it -- I
20 happened to transcribe some notes in an e-mail message.
21 I think I was really getting into my issue matrix and
22 open and closed issues. And so I typed this note for
23 the -- our internal team to say these are open issues.
24 So as with anyone, you recollect things

1 immediately after a meeting and you go, what was I
2 saying here, what did I mean. And so what I'm referring
3 to are my notes of June 6th that scribe all this onto
4 them, but I added a statement about Dave and Bill
5 needing to discuss local channel, as I've indicated in
6 1.9, and the -- and dedicated transport, as is part of
7 1.11 of the version we were looking at at that time.
8 Q. We can agree, I guess, then, that the what you
9 quote in your testimony as coming out of your meeting
10 notes aren't in your meeting notes, Exhibit 1 to your
11 deposition, right?
12 A. I would not agree. I would say that they are an
13 enhancement of my meeting notes.
14 Q. Where are they? You said you transcribed them
15 somewhere else. Where would we look to find those?
16 A. I think I was under the impression that they were
17 part of my -- an exhibit to -- to some notes that we
18 gave you. I believe maybe in what Mr. Peacock provided.
19 Q. Are there other meeting notes that you made of
20 meetings with BellSouth in your interconnection
21 agreement negotiations from June 6th, 2001 that aren't
22 here (indicating) in your deposition Exhibit 1?
23 A. Yes.
24 Q. And what would that consist of?

1 A. I do not have them with me. Again, I assumed that
2 you had them. It reiterates what I said here. But
3 since my notes are illegible, I didn't want to hand
4 these out to the team. So I simply typed them up.
5 Q. I got something here I think might be what you're
6 referring to, Miss Stevens. I don't have copies.
7 MR. SHORE: Permission to approach? I'll show
8 it, of course, to opposing counsel.
9 COMMISSIONER ERVIN: If you'll show what
10 you've got to Ms. Cecil, you may then approach.
11 MR. SHORE: (Complies with request.)
12 BY MR. SHORE:
13 Q. I'm going to show you a document that Ms. Cecil
14 produced to me, along with your meeting notes and other
15 documents, on Monday morning.
16 A. Okay. Okay. Because that was not, yeah,
17 included --
18 Q. I'm sorry I need to stand next to you here, but I
19 didn't make copies. That's a e-mail that you printed
20 out, right?
21 A. Correct.
22 Q. And that was an e-mail that you sent to members of
23 the AT&T negotiating team?
24 A. Correct.

1 Q. Following your June 6th meeting?
2 A. Correct.
3 Q. Okay. And what you say there, on top, are
4 "following are the AT&T action items from our meeting
5 with BellSouth today"?
6 A. Correct.
7 Q. And then about halfway down the page is the quote
8 that you say, in your testimony, is a quote from your
9 meeting notes of June 6th?
10 A. Yes.
11 MR. SHORE: That's all I have for Miss
12 Stevens. Thank you, Miss Stevens.
13 THE WITNESS: Sure.
14 COMMISSIONER ERVIN: All right. Mr. Cauthen,
15 do you have any questions for Ms. Stevens?
16 MR. CAUTHEN: No, sir.
17 COMMISSIONER ERVIN: Redirect.
18 MS. CECIL: I do.
19 COMMISSIONER ERVIN: All right. Miss Cecil.
20 MS. CECIL: If I could confirm the exhibit
21 numbers that Mr. Shore covered. He was going through
22 them fast, Commissioner. And so before I go to that,
23 I'd like to do that. The one that's an e-mail from
24 Michael Willis to Bill Peacock?

COMMISSIONER ERVIN: Is Number 4.

MS. CECIL: Number 4. Thank you.

COMMISSIONER ERVIN: The one that has, in the lower right-hand corner Stevens 4, I have marked as BellSouth Cross Exhibit Number 4.

MS. CECIL: Okay.

COMMISSIONER ERVIN: The first one he handed out in his conversation with Miss Stevens has, in the lower right-hand corner Stevens 3, and in the absolute lower right-hand corner 5/22/01, I have marked as BellSouth Cross Exhibit Number 2.

MS. CECIL: Okay.

COMMISSIONER ERVIN: Mr. Shore, is that accurately marked?

MR. SHORE: Yes.

MS. CECIL: Thank you.

COMMISSIONER ERVIN: And then the access tariff you discussed with Mr. King is Number 1.

MR. SHORE: Right.

COMMISSIONER ERVIN: Does that help, Miss Cecil?

MS. CECIL: Thank you. I do have redirect.

COMMISSIONER ERVIN: Okay.

<u>REDIRECT EXAMINATION BY MS. CECIL:</u>

1 Q. Miss Stevens, would you please look on page 20 of
2 your deposition.
3 A. Okay.
4 Q. Mr. Shore started out his cross-examination asking
5 you questions about how you knew what --
6 COMMISSIONER ERVIN: Miss Cecil, several of us
7 are having trouble hearing you.
8 MS. CECIL: I'm so sorry. I should shout
9 more. Sorry about that.
10 COMMISSIONER ERVIN: Do whatever you need to
11 do.
12 BY MS. CECIL:
13 Q. Okay. Mr. Shore asked you about how you knew what
14 were key issues when you were making your notes. And he
15 had you read from your deposition. And if you look at
16 line 13 and 14 there?
17 A. (Nods head up and down.)
18 Q. Would you read what you said in line 14.
19 A. "I just know what the issues are from the language
20 that we are looking at and considering."
21 Q. Okay. And the next question he asked you was:
22 "And when you take notes on what you describe as key
23 issues, do you write down what the parties say with
24 respect to those issues typically?" And what was your

1 answer?
2 A. "Yes."
3 Q. And then he asked you the question: "Do you write
4 down everything they say?" And what was your answer?
5 A. I asked him, "Word for word?"
6 Q. Uh-huh. And he responded, "Sure." And then what
7 was your response?
8 A. "No."
9 Q. Okay. All right. Let's also look on page 24 of
10 your deposition.
11 A. Okay.
12 Q. And he asked you about the definition of local
13 traffic being a key issue between AT&T and BellSouth.
14 A. Correct.
15 Q. Let's go to line 9, where he asked you the
16 question: "It was never the key issue or did it
17 become -- was it a key issue at some point in time?"
18 What was your answer?
19 A. "It wasn't a key issue during my tenure in
20 February of '01."
21 Q. And then he asked you the question: "Did it ever
22 become a key issue between February '01 and July 2001?"
23 What was your answer?
24 A. "No."

1 Q. Question: "How do you define key issue, then, as
2 you used it earlier?" What was your answer?
3 A. "A key would have been an outstanding contract
4 issue that the parties had not resolved."
5 Q. And then his next question was: "Is it your
6 testimony that the parties had resolved the definition
7 of local traffic prior to February of 2001?" Your
8 answer was?
9 A. "Yes."
10 Q. Was that the reason that you indicated that it was
11 not a key issue during that time frame that he asked
12 you?
13 A. Yes, because it was not an issue.
14 Q. Okay. All right. Let's move to -- let's, first,
15 move to what's been marked as BellSouth's Cross Exhibit
16 Number 4.
17 A. Okay.
18 Q. And if you'll turn to page 24.
19 A. (Complies with request.)
20 Q. Mr. Shore asked you some questions about 5.3.1.1.
21 Do you remember that?
22 A. Yes.
23 Q. And he asked you the question that nowhere did it
24 appear that there was a discussion about the FCC's April

1 27th, 2001 order. Do you remember that?
2 A. Yes.
3 Q. Look at the bottom of this sheet of paper. What's
4 the date on the bottom of it?
5 A. July 11th, '01.
6 Q. July 11th, '01. Now, when did the parties sign
7 the second interconnection agreement?
8 A. July 19th of '01.
9 Q. So were the parties negotiating a resolution of
10 traffic bound internet service providers prior to July
11 the 1st of '01?
12 A. Yes.
13 Q. Was it in a second and separate negotiation?
14 A. Yes.
15 Q. Okay. Okay. Now, let's turn to what's been
16 marked as Cross Exhibit Number 3. And turn over to page
17 26.
18 A. Okay.
19 Q. Okay. The language at 4.2, he asked you about
20 that language as well. Do you remember that?
21 A. Yes, I do.
22 Q. Do you know if this language ended up ever being
23 agreed to and included in the second interconnection
24 agreement?

1 A. I don't know. As I've stated, sometimes we wrote
2 okay, meaning at that moment we were okay with it.
3 Q. And at the time that this particular version of
4 red line was available, were the parties negotiating
5 traffic to internet service providers as well?
6 A. Yes.
7 Q. They were?
8 A. I'm sorry. Say the question again.
9 Q. At the time that the parties were negotiating this
10 version of the red line, were they also negotiating
11 compensation for internet service providers as well?
12 A. Yes, I believe that the time frame was around the
13 same.
14 Q. Okay. All right. Now, Mr. Shore asked you some
15 questions about your handwritten notes that you have
16 provided (indicating). Okay. Relative to any of your
17 handwritten notes, particularly the one dated June the
18 6th that he asked you about, did you compare those with
19 any notes that you received from BellSouth?
20 A. No. You mean did I prepare them -- excuse me.
21 Did I compare them at the time of the negotiation
22 session?
23 Q. No. I'm sorry. I wasn't clear. In the context
24 of discovery in this case we did get documents from

1 BellSouth?
2 A. Yes.
3 Q. Remember that?
4 A. Yes, I do.
5 Q. Did you compare any handwritten notes that we had
6 received from BellSouth with any of the notes in your
7 document?
8 A. Yes, I did.
9 Q. And what did you conclude after doing that review?
10 A. I believe the notes were --
11 MR. SHORE: I'm going to object. I think this
12 far exceeds the scope of my cross-examination.
13 COMMISSIONER ERVIN: Miss Cecil?
14 MS. CECIL: Well, he asked her about how she
15 knew what key issues were. He asked her about her note
16 taking ability, when she took notes, what she took notes
17 on. He asked her about particular provisions of this
18 one negotiating session. And I just think it would be
19 fair game to figure out, if there were opposing notes
20 from the other side, whether or not they matched or they
21 did not match. I think it would be very helpful for the
22 Commission to understand that.
23 COMMISSIONER ERVIN: Mr. Shore.
24 MR. SHORE: I think by Miss Cecil's

1 explanation it's outside the scope of anything I asked
2 her, considering we are going to have our witness here.
3 As soon as they get done with their case, if Miss Cecil
4 wants to ask Miss Shiroishi about BellSouth's notes, I
5 guess that's fair game for cross-examination, but it's
6 not redirect of my cross of Miss Stevens. I asked her
7 about her notes, not about BellSouth's notes.
8 COMMISSIONER ERVIN: Miss Cecil, I'm going to
9 sustain the objection. I'm not going to sustain it on
10 the grounds that it's beyond the scope of redirect. I'm
11 going to sustain it on the grounds that effectively what
12 we're going to get into is Ms. Stevens' opinion as to
13 the accuracy of her own notes based on her opinion as to
14 a comparison of her notes with BellSouth's notes.
15 And I think that her -- the probative value of
16 her opinion is outweighed by the waste of time that
17 would be involved in litigating that particular
18 question. It seems to me her opinion is to the accuracy
19 of her notes. Comparing them with BellSouth's notes is
20 such an attenuated issue that I think we'd probably be
21 better using our time if we didn't get into that.
22 MS. CECIL: I understand.
23 COMMISSIONER ERVIN: I think probably it's
24 within the scope of the redirect for the reason that you

say, but I think under Rule 403 I'm going to sustain the objection.

MS. CECIL: Okay. I understand. Thank you.

COMMISSIONER ERVIN: It will be appropriate, as Mr. Shore suggests, if you wish to challenge the accuracy of anything that Miss Shiroishi wants to testify to, that's certainly fair game. You may do that.

MS. CECIL: Okay.

Q. Finally, Miss Stevens, I'm going to ask you to take a look at what is marked as BellSouth Cross-examination Exhibit Number 2. And if you'd turn to page 20 of that exhibit.

A. Just to make sure I'm clear, is it the one dated 5/22/01 on the bottom?

Q. Marked through and dated 5/22.

A. Yes. Okay. I'm sorry. You said page 20?

Q. Uh-huh.

A. Okay.

Q. Do you remember, he asked you questions about the first paragraph there, compensation for local traffic?

A. Yes.

Q. Do you remember that? Do you remember that he asked you questions and indicated that during this time

1 frame the -- there's nothing in this document that talks
2 about voice over IP?
3 A. I do recall that.
4 Q. Were the parties negotiating voice over IP at this
5 time?
6 A. In a separate session.
7 Q. In a separate session?
8 A. Correct.
9 Q. Okay.
10 MS. CECIL: No other questions.
11 COMMISSIONER ERVIN: All right. Are there
12 questions from members of the Commission?
13 COMMISSIONER KERR: No.
14 EXAMINATION BY COMMISSIONER ERVIN:
15 Q. Miss Stevens, you may not be the best person for
16 me to ask this question, but I'm going to ask it anyway.
17 You talked some about the membership of the AT&T
18 negotiating team?
19 A. Correct.
20 Q. Were the various drafts of these agreements
21 reviewed by anybody with a law degree?
22 A. Yes, sir. In most negotiations sessions attorneys
23 were present for both parties.
24 Q. Do you know whether the specific sections that we

1 are talking about in this case, specifically, 5.3.1.1
2 and 5.3.3 were subject to legal review at AT&T?
3 A. Yes, sir. In looking at my notes, I always
4 documented what parties were in attendance; and so if we
5 discussed that issue on a particular day, it would show
6 you that, you know, Michael Carno (phonetic) or Roxanne
7 Douglas for AT&T was in attendance. So yes.
8 Q. So both of these were subject to legal review by
9 somebody at AT&T at some point?
10 A. That's correct.
11 COMMISSIONER ERVIN: All right. Thank you.
12 Anybody else up here have any questions?
13 (No response.)
14 MS. CECIL: Could I ask one question on your
15 question?
16 COMMISSIONER ERVIN: Oh, sure.
17 MS. CECIL: Miss Stevens, was not BellSouth
18 also represented by counsel in --
19 COMMISSIONER ERVIN: Well, I was going to ask
20 Miss Shiroishi the same question.
21 BY MS. CECIL:
22 Q. Wasn't BellSouth's attorney also present whenever
23 Miss Douglas or Mr. Carno generally were available?
24 A. Absolutely. It was our policy if one party did

not have the attorney, the other did not. Or if one party had an attorney present, the other party always did.

COMMISSIONER ERVIN: Okay. All right. Mr. Shore, you were leaning forward at one point. Did you have any questions on my questions?

MR. SHORE: No, sir. Just my back.

COMMISSIONER ERVIN: Okay. All right. Miss Stevens, thank you for coming to be with us and you may be excused.

THE WITNESS: Thank you.

(WITNESS EXCUSED)

COMMISSIONER ERVIN: Miss Cecil, when you're ready, you may call your next, and I think last, witness.

MS. CECIL: AT&T would call Bill Peacock.

COMMISSIONER ERVIN: And while Mr. Peacock's coming forward, I was insufficiently attentive. Did you move the admission of your exhibits at the time that you moved the -- that your testimony be copied in the record or not?

MS. CECIL: I did.

COMMISSIONER ERVIN: You did.

1 MS. CECIL: I thought so. She did not have an
2 exhibit. I know that I moved the exhibits in.
3 COMMISSIONER ERVIN: All right. I just want
4 to make sure we get it in.
5 MS. CECIL: Right. She didn't have an
6 exhibit, but Mr. King did.
7 COMMISSIONER ERVIN: Mr. Shore, do you --
8 while I'm thinking about this, Mr. Shore, do you want to
9 move your cross exhibits?
10 MR. SHORE: Yes. Thank you for the reminder.
11 COMMISSIONER ERVIN: Any objection to the four
12 cross exhibits that have been identified so far, Miss
13 Cecil? Miss Cecil, do you have any objection to the
14 admission of the four cross exhibits that have been
15 identified so far?
16 MS. CECIL: No, Commissioner.
17 COMMISSIONER ERVIN: All right. They'll be
18 admitted into evidence.
19 BELLSOUTH CROSS EXHIBITS 1-4
20 (Admitted)
21 All right. Mr. Peacock, if you would place
22 your left hand on the Bible and raise your right hand,
23 as you've already done.
24 BILLY C. PEACOCK; Being first duly sworn,

1 testified as follows:
2 DIRECT EXAMINATION BY MS. CECIL:
3 Q. Mr. Peacock, would you state your name and
4 business address for the Commission's record.
5 A. My name is Billy C. Peacock. My business address
6 is P.O. Box 6994, Douglasville, Georgia 30154.
7 Q. Are you the same Billy C. Peacock who caused to be
8 filed 24 pages of rebuttal testimony along with six
9 exhibits on January 17th, 2003 in this proceeding?
10 A. Yes.
11 Q. Do you have any changes to that rebuttal
12 testimony?
13 A. Yes, I do have one change. Oh, in the rebuttal.
14 Yes. Sorry. On page 22 of my rebuttal, on line 24, the
15 word "section" should be changed to "second." And
16 that's the only change.
17 Q. Mr. Peacock, if I asked you today the same
18 questions that are included in your rebuttal testimony,
19 would your answers be the same as included in that
20 testimony?
21 A. Yes, they would.
22 Q. Okay.
23 MS. CECIL: Commissioner, we would like to
24 move the admission of Mr. Peacock's rebuttal testimony,

1 including his six exhibits.
2 COMMISSIONER ERVIN: All right. That will be
3 so ordered. And I listened this time.
4 (REPORTER'S NOTE: The prefiled rebuttal testimony
5 of Billy C. Peacock will be reproduced in the record at
6 this point the same as if the questions had been orally
7 asked and the answers orally given from the witness
8 stand.)
9
10
11
12
13
14
15
16
17
18
19
20
21
22
23
24

Copy 163

FILED

JAN 17 2003

Clerk's Office
N.C. Utilities Commission

AT&T COMMUNICATIONS OF THE SOUTHERN STATES, LLC,

TELEPORT COMMUNICATIONS GROUP, INC., AND

TCG OF THE CAROLINAS, INC.

REBUTTAL TESTIMONY OF BILLY C. PEACOCK

BEFORE THE NORTH CAROLINA UTILITIES COMMISSION

DOCKET NO.: P-55, Sub 1376

JANUARY 17, 2003

Q. PLEASE STATE YOUR NAME, TITLE, AND BUSINESS ADDRESS.

A. My name is Billy C. Peacock. I am a District Manager in the Local Services & Access Management organization of AT&T Corp. ("AT&T"). My business address is P. O. Box 6994, Douglasville, Georgia 30135.

Q. FOR WHOM ARE YOU FILING TESTIMONY IN THIS PROCEEDING?

A. I am testifying on behalf of AT&T Communications of the Southern States, LLC, Teleport Communications Group, Inc., and TCG of the Carolinas, Inc. (collectively referred to as "AT&T").

Q. HAVE YOU PREVIOUSLY TESTIFIED IN OTHER REGULATORY PROCEEDINGS?

A. No.

Q. PLEASE PROVIDE A BRIEF DESCRIPTION OF YOUR EDUCATION AND EXPERIENCE.

A. I received a Bachelor of Business Administration degree from Georgia State University in 1987 and a Masters of Business Administration from Georgia State University in 1989. My twenty-nine (29) year career in telecommunications began in October Of 1973 with South Central Bell in Jackson, Mississippi, where I held positions in Operator Services, Industry Affairs and Public Affairs. I joined AT&T in 1983 and have held positions in External Affairs, State Government Affairs, Law & Government Affairs and Local Services and Access Management. In March of 1999, I joined AT&T's Local Services and Access Management organization to lead AT&T's negotiation of new Interconnection Agreements between AT&T and BellSouth Telecommunications Inc. ("BellSouth") for AT&T's nine Southern Region states. I led a cross-functional team whose objective was to negotiate contract terms and conditions that allowed AT&T to obtain all the services, features and functionalities guaranteed under the Telecommunications Act of 1996 ("Act") and subsequent orders, rules and implementing regulations of the Federal Communications Commission ("FCC").

Q. WHAT IS THE PURPOSE OF YOUR TESTIMONY?

A. My testimony responds to the Direct Testimony filed by Elizabeth R. A. Shiroishi on December 18, 2002, particularly regarding Ms. Shiroishi's recollection of the "intent" of AT&T and BellSouth in negotiating what constituted "Local Traffic" for purposes of applying local reciprocal compensation rates to the transport and termination of such "Local Traffic."

Q. WHAT QUALIFIES YOU TO TESTIFY REGARDING THE "INTENT" OF AT&T AND BELLSOUTH IN THEIR NEGOTIATIONS AS TO WHAT CONSTITUTED "LOCAL TRAFFIC"?

A. Unlike Ms. Shiroishi (who admitted in her deposition of January 13, 2002 that she was not involved in the North Carolina negotiations until well after AT&T's arbitration petition had been filed with the Commission)[1], I led the AT&T negotiations team from start to finish regarding its attempts to enter into Second Interconnection Agreement with BellSouth in North Carolina and all other BellSouth states. As such, I was present and participated in all negotiating sessions with BellSouth. I also was responsible for informing other AT&T employees who were not involved in negotiation meetings with BellSouth as to the progress being made in the negotiations, including reviewing language proposed by

[1] Deposition of Elizabeth R. A. Shiroishi, January 13, 2003, Page 29, lines 1-13.

1 BellSouth and obtaining proposed changes or approval of such
2 language.
3
4 Q. WHO WERE THE OTHER MEMBERS OF THE AT&T NEGOTIATING
5 TEAM?
6
7 A. Ms. Roberta Stevens, Mr. Sam Benenati, Mr. Michael Karno, Esq.
8 and Ms. Roxanne Douglas, Esq.
9
10 Q. ON PAGE 4 OF MS. SHIROISHI'S TESTIMONY AT LINES 3-5, SHE
11 STATES THAT MR. KING, WHO FILED DIRECT TESTIMONY ON
12 BEHALF OF AT&T IN THIS PROCEEDING ON NOVEMBER 26,
13 2002 WAS NOT A MEMBER OF THE AT&T NEGOTIATIONS TEAM.
14 IS THAT CORRECT?
15
16 A. Not exactly. Although Mr. King was not a member of the AT&T
17 negotiations team which regularly met with BellSouth, he was one
18 of the AT&T managers charged with implementing various
19 provisions of Second Interconnection Agreement once it was
20 finalized with BellSouth. Thus, during negotiations I routinely
21 briefed Mr. King on the status of the negotiations and reviewed
22 BellSouth's proposed language with him. Again, I did this not only
23 to obtain Mr. King's comments, but also to receive his approval
24 regarding interconnection provisions for which he was responsible
25 from an implementation perspective. In other words, Mr. King was

one of several internal AT&T "clients" for whom I was negotiating Second Interconnection Agreement with BellSouth.

Q. WITH RESPECT TO MR. KING'S SUBSEQUENT IMPLEMENTATION RESPONSIBILITIES, WAS WHAT CONSTITUTED "LOCAL TRAFFIC" AN IMPORTANT ISSUE TO AT&T IN ITS NEGOTIATIONS WITH BELLSOUTH?

A. Definitely. The definition of "Local Traffic" established the traffic to which the parties would apply local reciprocal compensation rates. If traffic did not meet the definition of "Local Traffic," it would be transported and terminated at higher switched access rates.

Q. WHAT IMPACT DID THE IMPORTANCE OF WHAT CONSTITUTED "LOCAL TRAFFIC" HAVE ON YOUR NEGOTIATIONS WITH BELLSOUTH?

A. Had AT&T not been able to successfully resolve the issue to Mr. King's and AT&T's satisfaction, we would have been required to arbitrate the issue with BellSouth in North Carolina and all other Southern Region states.

Q. WAS BELLSOUTH AWARE OF THE IMPORTANCE TO AT&T OF WHAT CONSTITUTED "LOCAL TRAFFIC" IN YOUR NEGOTIATIONS?

A. Absolutely.

Q. WHAT WAS AT&T'S POSITION AND INTENT REGARDING WHAT CONSTITUTED "LOCAL TRAFFIC?"

A. Ever since the passage of the Act, AT&T has been attempting to obtain a definition of "Local Traffic" in its interconnection negotiations with BellSouth and other incumbent local exchange carriers ("ILEC's) which included all traffic within a "local transport and access area" or "LATA" as defined in the Act. This was a well known company-wide objective. Thus, in our interconnection negotiations with BellSouth, we advised BellSouth that AT&T wanted to define all intraLATA traffic as constituting "Local Traffic" and accordingly, such "Local Traffic" would be transported and terminated at local reciprocal compensation rates. Put another way, we advised BellSouth that AT&T wanted to pay local reciprocal compensation rates for the transport and termination of what historically had been known as intraLATA traffic.

Q. RELATIVE TO YOUR NEGOTIATIONS WITH BELLSOUTH IN NORTH CAROLINA, DID AT&T ARBITRATE IN NORTH CAROLINA OR ANY OTHER STATE WHAT CONSTITUTES "LOCAL TRAFFIC"?

A. No. BellSouth agreed that intraLATA traffic would be compensated at local reciprocal rates so we did not have to arbitrate the issue.

In this respect, AT&T did not ask this Commission to arbitrate what constituted "Local Traffic" in its arbitration petition filed on April 27, 2000. For the Commission's convenience, I have attached a copy of list of arbitration issues with BellSouth as BCP Rebuttal Exhibit 1.

Q. WHAT WAS THE EXACT LANGAUAGE REGARDING COMPENSATION FOR INTRALATA TRAFFIC TO WHICH BELLSOUTH AGREED BEFORE AT&T FILED ITS ARBITRATION PETITION?

A. In Attachment 3, Section 6, Interconnection Compensation, at Section 6.1.1, Compensation for Local and IntraLATA toll, BellSouth agreed to the following language:

> "Except as provided in this Attachment [3], the Parties shall bill each other reciprocal compensation in accordance with the standards set forth in this Agreement for all local and intraLATA toll traffic originated by one Party and terminated to the other Party. Such traffic shall be recorded and transmitted to AT&T in accordance with Attachment 6 of this Agreement. Reciprocal compensation for the transport and termination of local and intraLATA toll traffic shall

be charged at rates specified in Exhibit A of this Attachment."

Q. WHAT TYPE OF RATES WERE INCLUDED ON EXHIBIT A TO ATTACHMENT 3?

A. Exhibit A contains only "Local Interconnection" or local reciprocal compensation rates; it does not contain any switched access rates. For the Commission's convenience, I have attached a copy of Attachment 3 (including its Exhibit A) which was filed by AT&T in its arbitration petition as BCP Rebuttal Exhibit 2.

Q. DID THE LANGUAGE SET FORTH ABOVE IN SECTION 6.1.1 OF ATTACHMENT 3 REMAIN IN SECOND INTERCONNECTION AGREEMENT THAT WAS EVENTUALLY EXECUTED BY AND BELLSOUTH?

A. No.

Q. WHY NOT?

A. After AT&T filed its arbitration petition, and even while the arbitration proceedings were taking place, AT&T continued to negotiate with BellSouth regarding those issues which were still unresolved and were in the process of being arbitrated. The goal

was to resolve as many issues as possible, and when issues were resolved after AT&T's petition had been filed, AT&T and BellSouth would advise the Commission of such resolution and thus remove the issues from the arbitration proceeding. Two local compensation pricing issues which were included in AT&T's arbitration petition, but which the parties continued to negotiate after AT&T filed its arbitration petition, were "Issue 1: Should BellSouth be permitted to treat calls to internet service providers ("ISP's") as non-local traffic for purposes of reciprocal compensation? (Local Interconnection, Attachment 3, Section 6.1.3);" and "Issue 18: What is the treatment of outbound traffic voice calls over internet protocol ("VOIP") telephony, as it pertains to reciprocal compensation? (Local Interconnection, Attachment 3, Section 6.1.9)." With respect to Issue 1, AT&T and BellSouth agreed upon "placeholder" language to be included in Second Interconnection Agreement for Issue 1 relative to ISP traffic and removed it from the arbitration proceeding once the FCC issued its April 27, 2001 ISP Order on Remand regarding ISP traffic (discussed further below). (This "placeholder" language was needed because AT&T and BellSouth had yet to agree to exact language regarding the FCC's April 27, 2001 Order on Remand). With respect to Issue 18, AT&T and BellSouth agreed upon language that states that the parties would abide by any future FCC order or rule regarding IP telephony after the Commission issued its arbitration order which adopted AT&T's position relative

to VOIP calls. Thus the language in Section 6.1.1 of Attachment 3 was changed to reflect the parties' agreement regarding these two issues.

Q. WHAT WAS THE DISPUTE REGARDING ISP TRAFFIC AS DESCRIBED IN AT&T'S ARBITRATION PETITION?

A. AT&T argued that calls to ISP's should be treated as "Local Traffic" and transported and terminated at local reciprocal compensation rates. BellSouth argued that the FCC had determined that calls to ISP's to be "interstate in nature" and, therefore should not be treated as "Local Traffic" for purposes of applying local reciprocal compensation rates.[2]

Q. HOW DID THE PARTIES EVENTUALLY RESOLVE THIS DISPUTE?

A. On April 27, 2001, while the parties were still negotiating, the FCC released its Order on Remand and Report and Order in CC Docket No. 96-98 and 99-68 ("ISP Order on Remand"). The parties eventually agreed to implement the FCC's ISP Order on Remand regarding the treatment of ISP traffic in Second Interconnection Agreement. The language reflecting such agreement was reflected in Section 5.3.1.1 of Attachment 3 of Second Interconnection Agreement. It provides:

[2] See Attachment B, Issues for Arbitration Between AT&T and BellSouth, at Page 1, Issue 1, BellSouth Position, filed with AT&T's arbitration petition and attached hereto as BCP Rebuttal Exhibit 3.

"For the treatment of local and ISP bound traffic in this Agreement, the Parties agree to implement the FCC's Order on Remand and Report and Order in CC Docket No. 96-98 and 99-68 released April 27, 2001 ("ISP Order on Remand"). The Parties further agree to amend this agreement, within sixty (60) days of execution, to incorporate language reflecting the FCC ISP Order on Remand. At such time as that amendment is finalized, the Parties agree to work cooperatively to "true-up" compensation amounts consistent with the terms of the amended language from the effective date of the FCC ISP Order on Remand to the date the amendment is finalized. The Parties do not agree on the rates to apply to ISP bound traffic between the end of the term of the preceding agreement and June 14, 2001, the effective date of the FCC's ISP Order on Remand. In this Section, the Parties express their intent to file negotiated language to incorporate the FCC's ISP Order on Remand. If the Parties are unable to agree on this language addressing this issue by the time the language is due to be filed, the Parties will file their respective proposed language with the appropriate Commission for resolution. Until final contract language is agreed upon or ordered, the Parties agree not to re-rate or bill

each other for ISP bound calls between the end of the of the term of the preceding interconnection agreement and June 14, 2001. Additionally, the Parties agree to apply a "LATAwide" local concept to this Attachment 3, meaning that traffic that has been traditionally been treated as intraLATA toll traffic will now be treated as local for intercarrier compensation purposes, except for those calls that are originated or terminated through switched access arrangements as established by the State Commission or FCC."

Q. WHAT WAS THE DISPUTE REGARDING VOIP CALLS AS DESCRIBED IN AT&T'S ARBITRATION PETITION?

A AT&T argued that VOIP calls should not be subject to any compensation until the FCC issued rules regarding these calls. BellSouth argued that these calls were consistent with traditional long distance calling and thus were to be transported and terminated at switched access rates and not at local reciprocal compensation rates as "Local Traffic." [3]

Q. HOW DID THE PARTIES RESOLVE THIS DISPUTE?

[3] See Attachment B, Issues for Arbitration Between AT&T and BellSouth, at Page 11, Issue 18, BellSouth Position, filed with AT&T's arbitration petition and attached hereto as BCP Rebuttal Exhibit 4.

A. The parties eventually "agreed to disagree" whether VOIP calls constituted switched access traffic and agreed to abide by any applicable subsequent FCC order(s) regarding such calls. The language reflecting such agreement was reflected in Section 5.3.3 of Attachment 3 of Second Interconnection Agreement. It provides, among other things:

> "The Parties have been unable to agree as to whether Voice Over Internet Protocol ("VOIP") transmissions which cross local calling area boundaries constitute Switched Access Traffic. Notwithstanding the foregoing, and without waiving any rights with respect to either Party's position as to the jurisdictional nature of VOIP, the Parties agree to abide by an effective and applicable FCC rules and orders regarding the nature of such traffic and the compensation payable by the Parties for such traffic, if any; provided however, that any VOIP transmission which originates in one LATA and terminates in another LATA (i.e., the end to end points of the call), shall not be compensated as Local Traffic. This Section is interrelated to Section 5.3.1.1."

Q. AGAIN, HOW DID THE PARTIES RESOLVING THESE TWO ISSUES IMPACT WHAT CONSTITUTED "LOCAL TRAFFIC" UNDER SECOND INTERCONNECTION AGREEMENT?

A. As is apparent from the foregoing discussion, both issues involved "jurisdictional" questions, meaning whether such traffic or calls constituted "Local Traffic" or switched access traffic. Thus when it came time to draft language relative to these issues, in addition to the specific language for each issue, BellSouth eventually also proposed the following language in Section 5.3.1.1 of Attachment 3 that "[a]dditionally, the Parties agree to apply a "LATAwide" local concept to this Attachment 3, meaning that traffic that has been traditionally treated as intraLATA toll traffic will now be treated as local for intercarrier compensation purposes, except for those calls that are originated or terminated through switched access arrangements as established by the ruling regulatory body."

Q. AT THIS TIME, WAS MS. SHIROISHI INVOLVED IN THE NEGOTIATIONS?

A. Yes. Some time after AT&T filed its North Carolina arbitration petition, Ms. Shiroishi joined the BellSouth negotiating team as BellSouth's local interconnection subject matter expert. She also led BellSouth's intercarrier compensation negotiations with AT&T.

Q. IN MS. SHIROISHI'S DIRECT TESTIMONY, AT PAGE 3, LINES 1-2, SHE REFERS TO THE ABOVE LANGUAGE "EXCEPT FOR THOSE CALLS THAT ARE ORIGINATED OR TERMINATED THROUGH SWITCHED ACCESS ARRANGEMENTS AS ESTABLISHED BY THE

STATE COMMISSION OR FCC" AS AN "EXCLUSION" THAT WAS "SPECIFICALLY TARGETED AT INTRALATA TRAFFIC." IS THIS TESTIMONY CONSISTENT WITH WHAT MS. SHIROISHI OR ANYONE ELSE FROM BELLSOUTH SAID ABOUT THIS LANGUAGE DURING YOUR NEGOTIATIONS?

A. Absolutely not. Actually, the first time Ms. Shiroishi presented this language it was slightly different from the language that was eventually agreed to by the parties. She originated proposed "as established by the ruling regulatory body." The language that was eventually included in Second Interconnection Agreement states "as established by the State Commission or FCC." The discussions regarding BellSouth's proposed language were framed by the arbitration issues that remained unresolved. These discussions did not include any modification to include intraLATA traffic as "Local Traffic." AT&T's understanding of BellSouth's proposed language was that it was needed to prevent either AT&T (or any Competing Local Provider ("CLP") which "opted-into" or adopted this language under Section 252(i) of the Act) from representing that ISP traffic and VOIP calls constituted "Local Traffic" for purposes of applying local reciprocal compensation rates. My discussions with Ms. Shiroishi and subsequent "red-lined contract language changes" were focused on drafting language that met BellSouth's concerns and obligated AT&T to abide by any state commission or FCC Order regarding ISP traffic or VOIP calls.

Q. DID YOU DISCUSS MS. SHIROISHI'S EXPLANATION WITH MR. KING?

A. Yes. I discussed Ms. Shiroishi's explanation with Mr. King and others at AT&T and we agreed to accept the language, except that we asked to change "ruling regulatory body" to "State Commission or FCC." Importantly, at this time the Parties also had agreed to a clear and unambiguous definition of "Switched Access Traffic" (proposed by BellSouth) which did not include any intraLATA or "LATAwide Traffic." Moreover, the justification for including language regarding "switched access arrangements" (in order to protect BellSouth from AT&T or other CLPs from representing that ISP traffic or VOIP calls were "Local Traffic"), tracked perfectly the definition of "Switched Access Traffic" in Section 5.3.3. Furthermore, BellSouth offered, and AT&T agreed, to include language in Section 5.3.3 (which includes the definition of "Switched Access Traffic") that this Section 5.3.3 was "interrelated" to Section 5.3.1.1. As discussed above, Section 5.3.1.1 is that Section of Second Interconnection Agreement where the parties agreed "...to apply a LATAwide local concept to this Attachment 3..." Thus, when these two Sections are "read together" by virtue of the "interrelated" language of Section 5.3.3, it is clear that the definition of "Switched Access Traffic" (which is limited to intrastate interLATA and interstate interLATA traffic) in Section

5.3.3 applies to the "exclusion" language regarding "switched access arrangements" found in Section 5.3.1.1.

Q. WERE THERE OTHER CHANGES TO THE CONTRACT LANGUAGE THAT SUPPORT THE PARTIES' INTENT TO COMPENSATE INTRALATA TOLL AS LOCAL TRAFFIC? IF SO, WHAT WERE THOSE CHANGES?

A. Yes. The original "Switched Access Traffic" proposed by BellSouth to AT&T read as follows:

> "Switched Access Traffic is defined as telephone calls requiring local transmission or switching services for the purpose of the origination or termination of ***Telephone Toll Service***..."

During the negotiations, and prior to reaching agreement on all Attachment 3 language, the Parties agreed to modify this sentence so that it read:

> "Switched Access Traffic is defined as telephone calls requiring local transmission or switching services for the purpose of the origination or termination of ***Intrastate InterLATA and Interstate InterLATA***..."

BellSouth's acceptance of this modification is yet further support for AT&T's belief that intraLATA traffic was considered "Local Traffic" subject to local reciprocal compensation rates and was not subject to switched access rates.

Additionally, BellSouth had proposed to include the following language in Section 5.4 of Attachment 3 regarding compensation for IntraLATA Toll Traffic:

> "IntraLATA Toll Traffic. IntraLATA Toll Traffic is defined as any telephone call that originates and terminates in the same LATA and is billed by the originating Party as a toll call.
>
> Compensation for IntraLATA Toll Traffic. For terminating its IntraLATA Toll Traffic on the other Party's network, the originating Party will pay the terminating Party's intrastate or interstate terminating switched access tariff rates as set forth in the effective intrastate or interstate access services tariff, whichever is appropriate. The appropriate charges will be determined by the routing of the call. If BellSouth or AT&T is the other Party's end user's presubscribed interexchange carrier or if an end user uses BellSouth or AT&T as an interexchange carrier on a 101XXXX

basis, BellSouth or AT&T will charge the other Party the appropriate tariff charges for originating switched access services."

In an e-mail from Ms. Shiroishi to AT&T on July 18, 2001, Ms. Shiroishi states, "Attached is the redline as a result of last night's call. I realized we don't need the intraLATA stuff, so I've redlined. Everything else that you accepted last night is shown as accepted." In the redline version of the contract, the language found on Page 18, lines 10-25, and Page 19, lines 1-3, of my testimony in fact is shown as struck. AT&T and BellSouth signed Second Interconnection Agreement the next day, on July 19, 2001.

BellSouth's willingness to strike the very language that supports its position in this proceeding (that intraLATA was subject to switched access rates) supports AT&T's position that the parties were in agreement to compensate such intraLATA traffic as "Local Traffic."

Q. DID AT&T ACCEPT MS. SHIROISHI'S EXPLANATION IN GOOD FAITH AND THUS AGREE TO HER "EXCLUSION" LANGUAGE?

A. Yes we did, after I explained Ms. Shiroishi's explanation to Mr. King and others at AT&T.

Q. WHAT WOULD HAVE HAPPENED HAD MS. SHIROISHI EXPLAINED, AS SHE TESTIFIES SHE DID, ON PAGE 3, LINES 1-2, THAT THE "EXCLUSION" LANGUAGE WAS SPECIFICALLY TARGETED AT INTRALATA TRAFFIC, MEANING THAT AT&T WOULD HAVE BEEN REQUIRED TO PAY SWITCHED ACCESS RATES FOR ALL INTRALATA OR "LATAWIDE TRAFFIC"?

A. Obviously, given AT&T's corporate objective to have all intraLATA traffic compensated at local reciprocal compensation rates, we would never have agreed with such language. Instead, we would have reverted back to the language agreed to by the parties before AT&T filed its arbitration petition found in Section 6.1.1 of Attachment 3 which stated that "[r]eciprocal compensation for the transport and termination of local and intraLATA toll traffic shall be charged at the rates specified in Exhibit A." In other words, we would have never agreed to pay switched access rates for intraLATA traffic unless ordered to do by a state commission in an arbitration—and we would have arbitrated the definition of "Local Traffic" in every state in BellSouth's territory.

Q. BEFORE FILING YOUR TESTIMONY IN THIS PROCEEDING, DID YOU REVIEW ANY MEETING NOTES OR MINUTES OF NEGOTIATIONS WITH BELLSOUTH?

A. Yes, although my recollection of what Ms. Shiroishi said about the "exclusion" language is very clear, I did review AT&T's meeting notes from the June/July 2001 timeframe when we were negotiating the ISP and VOIP issues. I found nothing in these meeting notes that contradicted my recollection of Ms. Shiroishi's explanation regarding the "exclusion" language as I have testified herein.

Q. IN THAT CASE, HOW DO YOU EXPLAIN MS. SHIROISHI'S TESTIMONY AT PAGE 5, LINES 22-25, THAT THE PARTIES "...DREW DIAGRAMS ON THE WHITEBOARD AND SPECIFICALLY TRAVERSED SWITCHED ACCESS ARRANGEMENTS AND THE FACT THAT THEY WOULD BE EXPRESSLY EXCLUDED FROM THE DEFINITION OF LOCAL TRAFFIC?"

A. Ms. Shiroishi is correct that the parties drew diagrams on a whiteboard, but those diagrams involved our negotiations regarding network architecture or "Point of Interconnection." As this Commission will remember, this was a complex network facilities issue that was hotly contested in the arbitration, with the parties engaging in multiple rounds of briefs on the issue.[4] It was complex not only from the standpoint of understanding prior orders from the FCC and other state commissions, but also from a

[4] In fact, in the Commission's June 19, 2001 Order Ruling On Objections And Requiring The Filing Of The Composite Agreement in the AT&T Arbitration regarding this issue, the Commission stated: "This issue has been one of the most exhaustingly analyzed and briefed issues the Commission has ever dealt with in an arbitration proceeding." Docket No. P-140, Sub 73; and P-646, Sub 7; June 19, 2001; Order at Page 4.

network architecture perspective, thus making it almost impossible to discuss the issue without resorting to drawing diagrams. Furthermore, the meeting notes which I reviewed confirmed that such "whiteboard diagrams" were used by the parties in discussing the network architecture or "Point of Interconnection" issue and not to diagram what constituted "switched access arrangements." Again, had Ms. Shiroishi diagramed that "switched access arrangements" would have meant that AT&T would be paying switched access rates for intraLATA traffic, we would have never accepted her "exclusion" language.

Q. AT PAGE 6, LINES 6-17, WHAT IS THE RELEVANCE OF MS. SHIROISHI'S TESTIMONY THAT "BELLSOUTH HAS THIS SAME DEFINITION OF LOCAL TRAFFIC IN INTERCONNECTION AGREEMENTS WITH OTHER CLPS" AND THAT "NO OTHER CLP HAS TAKEN THE POSITION THAT AT&T IS TAKING IN THIS CASE REGARDING ITS INTERPRETATION OF THIS LANGUAGE"?

A. None, whatsoever, because Ms. Shiroishi failed to testify as to whether any of these interconnection agreements with other CLP's also contain the same definition of "Switched Access Traffic," the same provisions regarding ISP traffic and VOIP calls, and the same "interrelated" language found in Section 5.3.3, all as found in Section Interconnection Agreement. She also provided no testimony regarding the intent of BellSouth and the other CLP's

regarding any related interconnection negotiations (if such negotiations even occurred).

Q. HOW DO YOU RESPOND TO MS. SHIROISHI'S TESTIMONY AT PAGE 7, LINES 8-13 THAT "...MR. KING'S THEORY IS NOT LOGICAL. UNDER MR. KING'S THEORY, THE DEFINITION OF SWITCHED ACCESS TRAFFIC DOES NOT INCLUDE ANY INTRALATA TRAFFIC. HOWEVER, THE EXCLUSION IS SPECIFICALLY FOR A CERTAIN CLASS OF INTRALATA TRAFFIC. SAID ANOTHER WAY, AT&T'S POSITION IS THAT ALL CALLS IN THE LATA ARE LOCAL. IF THAT WERE CORRECT, THERE WOULD HAVE BEEN NO NEED FOR THE EXCLUSION. THE LANGUAGE WOULD SIMPLY STATE THAT ALL CALLS IN THE LATA ARE LOCAL"?

A. As discussed above, BellSouth has argued in various state regulatory proceedings and at the FCC that certain "local looking" or intraLATA traffic is not really local or intraLATa traffic, but instead is "jurisdictionally" interstate or "long distance" in nature. Two examples which immediately come to mind involve the two compensation issues discussed above, namely ISP traffic and VOIP calls. Although AT&T disagrees with BellSouth's public policy positions regarding both of these issues, nevertheless it was to protect BellSouth regarding these issues (in the event that a State Commission or the FCC decided that these types of calls were

subject to interLATA compensation) that the "exclusion" language was agreed to by AT&T. Thus there is nothing illogical about Mr. King's "theory." Rather, it is totally consistent with the discussions of the parties when they agreed to the "exclusion" language.

Q. WHAT IS THE SIGNIFICANCE OF MS. SHIROISHI'S TESTIMONY AT PAGE 7, LINES 20-24, THAT THE PARTIES' INTERCONNECTION AGREEMENT FOR MISSISSIPPI HAS A DEFINITION OF "LOCAL TRAFFIC" WHICH READS "LOCAL TRAFFIC MEANS ANY TELEPHONE CALL THAT ORIGINATES AND TERMINATES IN THE SAME LATA."

A. Rather than cast doubt on what the parties intended regarding what constitutes "Local Traffic" under the North Carolina Second Interconnection Agreement, the fact that the parties agreed to a "LATAwide" definition in the Mississippi Second Interconnection Agreement supports my contention that AT&T wanted a "LATAwide" definition of "Local Traffic" from BellSouth as a matter of corporate policy and that BellSouth was aware of AT&T's corporate policy. Moreover, Ms. Shiroishi fails to tell the Commission the whole story of the Mississippi Second Interconnection Agreement. Most importantly, at the time that interconnection agreement was negotiated and executed, the FCC had not yet released its April 27, 2001, ISP Order on Remand. As such, rather than arbitrate in Mississippi, BellSouth agreed to

have all ISP traffic compensated at negotiated compensation rates. Having made that decision regarding ISP traffic, there was no need to have the "exclusion" regarding what would happen if the FCC subsequently decided that ISP traffic was interLATA traffic such to access charges. For the Commission's convenience, I have attached those relevant portions of the Mississippi agreement as BCP Rebuttal Exhibit 5.

Q. ON PAGE 9, LINES 8-9, MS. SHIROISHI DISCUSSES THE "INTERRELATED" LANGUAGE OF SECTION 5.3.3 (DEFINITION OF SWITCHED ACCESS TRAFFIC) TO SECTION 5.3.1.1 (LATAWIDE CONCEPT FOR "LOCAL TRAFFIC"), IMPLYING THAT THE LANGUAGE "THIS SECTION IS INTERRELATED TO SECTION 5.3.1" DOES NOT APPLY TO "LOCAL TRAFFIC," BUT INSTEAD ONLY APPLIES TO THE VOIP PROVISIONS IN SECTION 5.3.1. IS THIS A CREDIBLE ARGUMENT?

A. No. A review of the entirety of Section 5.3.3 shows that Ms. Shiroishi's "implication" that the "interrelated language" of Section 5.3.3 applied only to VOIP calls violates all proper rules of contract construction and interpretation. Importantly, the "interrelated" language of Section 5.3.3 uses the term "Section" with a capitol "S," meaning that ***all of the language included in Section 5.3.3 is interrelated to Section 5.3.1.1***, and not just the last two sentences of the Section as implied by Ms. Shiroishi.

Q. AT PAGE 9, LINES 11-24, MS. SHIROISHI ALSO STATES THAT THERE IS OTHER LANGUAGE IN ATTACHMENT 3 WHICH "ADDRESSES THE MIGRATION TO THIS NEW DEFINITION OF LOCAL TRAFFIC," ASSERTING SOMEHOW THAT THE TYPES OF TRUNKS USED BY AT&T GOVERNED WHETHER CERTAIN TRAFFIC WOULD BE CONSIDERED "LOCAL TRAFFIC." ARE THERE ANY PROVISIONS IN SECOND INTERCONNECTION AGREEMENT WHICH STATE THAT WHETHER TRAFFIC IS CONSIDERED "LOCAL TRAFFIC" IS DEPENDANT ON THE TYPES OF TRUNKS USED TO TRANSPORT SUCH TRAFFIC?

A. Absolutely not. There is no language whatsoever in Second Interconnection Agreement that makes what constitutes "Local Traffic" dependent in any way on the use of any particular trunks. Had BellSouth suggested such a provision, AT&T would have never agreed to "convert" or "reconfigure" its network. Since 1996, AT&T has designed its network to transport both local and long distance calls over the same or related network facilities. What Ms. Shiroishi is suggesting is that AT&T is required to transport all of its "local calls" only over "local trunks" and all of its "long distance calls" only over "long distance" trunks. This is inefficient and not consistent with the intent of the Act to develop competition in an efficient manner. Perhaps more importantly, the use of "local only" and "long distance only" trunks is not required by Second

1 Interconnection Agreement despite any "implication" Ms. Shiroishi
2 might assert to the contrary.
3
4 Q. IN YOUR TESTIMONY, YOU HAVE REFERRED TO DIFFERENT
5 SECTIONS IN VARIOUS INTERCONNECTION AGREEMENTS
6 (BOTH NORTH CAROLINA AND MISSISSIPPI). HAVE YOU
7 PREPARED A DOCUMENT WHICH INCLUDES SUCH SECTIONS
8 PLUS OTHER RELATED INFORMATION?
9
10 A. Yes. For the Commission's convenience, I have attached this
11 document as BCP Rebuttal Exhibit 6.
12
13 Q. DOES THIS CONCLUDE YOUR TESTIMONY?
14
15 A. Yes.

BY MS. CECIL:

Q. Mr. Peacock, have you prepared a summary of your testimony?

A. Yes, I have.

Q. Would you please provide it.

A. Thank you.

(REPORTER'S NOTE: The written summary of Billy C. Peacock will be reproduced in the record at this point the same as given orally by Mr. Peacock from the witness stand.)

Bill Peacock Rebuttal Testimony Summary
January 22, 2003

North Carolina Utilities Commission
Docket No. P-55, Sub 1376

Summary of Rebuttal Testimony of Bill Peacock

Good Morning Commissioners. My name is Billy C. Peacock and I am employed by AT&T Corp. I joined AT&T in 1984 holding various positions in external affairs, state government affairs, consumer marketing and Local Services and Access Management. Before joining AT&T, from 1973 to 1984, I worked for South Central Bell in various operator services, human resources and industry affairs positions. In March of 1999, I joined AT&T's Local Services and Access Management organization to lead AT&T's negotiation of new interconnection agreements between AT&T and BellSouth. All totaled, I have over twenty-nine (29) years experience in the Bell System and the telecommunications industry.

My testimony responds to the Direct Testimony filed by BellSouth's Beth Shiroishi on December 18, 2002 regarding various discussions that she states took place between AT&T and BellSouth regarding the North Carolina Interconnection Agreement signed by AT&T and BellSouth on July 19, 2001.

I have led AT&T's negotiations ~~team~~ from start to finish regarding its attempts to negotiate a new agreement with BellSouth in North Carolina and the other eight (8) states in BellSouth's territory. It was and is my job to inform other ~~AT&T~~ managers as to the progress being made in the negotiations,

including reviewing language proposed by BellSouth and obtaining proposed changes or approval of such language.

Today, BellSouth refuses to implement the provisions of the executed contract that apply to "LATAwide Local" traffic.

The language in the Agreement clearly states that the Parties agree to apply a "LATAwide" Local concept ... meaning that traffic that had been traditionally treated as intraLATA toll traffic would be treated as local for intercarrier compensation purposes, except for those calls that are originated or terminated through switched access arrangements as established by the State Commission or FCC.

Initially, as filed in AT&T's arbitration petition, the Agreement simply stated that each party would bill the other reciprocal compensation ... for all local and intraLATA toll traffic originated by one Party and terminated by the other Party.

The language changed somewhat after AT&T's North Carolina arbitration filing was made on April 27, 2000. AT&T and BellSouth continued to negotiate unresolved issues that included two (2) local compensation pricing issues. These issues were Arbitration Issue 1, that questioned how calls to internet service providers ("ISPs") would be compensated whether (as local or as interstate switched access) and Arbitration Issue 18, that questioned the representation of other access ~~services~~ traffic as local traffic for purposes of payment of reciprocal compensation.

During May through July 2001, AT&T and BellSouth negotiated final contract language for filing with the North Carolina Utilities Commission. Numerous face-to-face and teleconference meetings were held. AT&T and BellSouth focused on resolving "disagree" provisions as filed in AT&T's arbitration filing. Changes made to the language in the Agreement were made to reflect our settlement of these issues.

Ms. Shiroishi's attempts to assert that through these changes, AT&T ~~knowingly~~ "negotiated away" one of ~~AT&T's~~ our most desired provisions in our Agreement with BellSouth, i.e., "LATAwide" local. Ms. Shiroishi is wrong. BellSouth never stated its desire to change the "LATAwide" local language such that it would exclude intraLATA toll traffic as local. If BellSouth had said such as ~~this~~ that, AT&T would never have agreed, and AT&T would have included this disagreement in our arbitration filing with ~~this~~ the North Carolina Commission.

The facts are:

FACT 1: To put this in perspective, in Mississippi, BellSouth had previously agreed to AT&T's proposed LATAwide local language.

FACT 2: The language in our executed Agreement was changed to reflect that additional types of traffic (specifically internet provider traffic and "Voice Over Internet Protocol" ("VOIP") traffic) that originated or terminated through switched access arrangements would be excluded from "LATAwide" local.

FACT 3: Language originally offered by BellSouth that referenced "Telephone Toll Service" was changed to "Intrastate InterLATA and Interstate InterLATA." BellSouth's acceptance of this change supports AT&T's position that intraLATA traffic was considered "Local Traffic" subject to local reciprocal compensation rates and ~~was~~ not subject to switched access.

FACT 4: BellSouth offered and AT&T agreed to delete the very language in the agreement that supported BellSouth's position that intraLATA was subject to switched access charges. The deleted language defined intraLATA toll traffic as being compensated through switched access rates. The next day, after this language was deleted, AT&T and BellSouth executed our current agreement.

In closing, AT&T would never have agreed to pay switched access rates for intraLATA traffic unless ordered to do so by ~~the~~ state commission ~~in~~ an arbitration and AT&T would have arbitrated the inclusion of intraLATA toll traffic as local in every state in BellSouth territory had BellSouth not agreed to the "LATAwide" local concept.

That concludes my summary. Thank you.

1 MS. CECIL: The witness is available for
2 cross-examination.
3 COMMISSIONER ERVIN: Mr. Shore.
4 MR. SHORE: Thank you, Commissioner Ervin.
5 CROSS-EXAMINATION BY MR. SHORE:
6 Q. Mr. Peacock, good afternoon. I'm Andrew Shore. I
7 represent BellSouth in this case. I've got some
8 questions about the testimony filed under your name
9 here.
10 First of all, Mr. Peacock, Miss Cecil's law firm
11 produced the first draft of your prefiled testimony,
12 correct?
13 A. After extensive discussions with Miss Cecil
14 regarding the issue in the complaint, Miss Cecil's firm
15 did draft or type the first draft of the testimony.
16 Q. You also collaborated with Jeff King regarding
17 your prefiled testimony, correct?
18 A. As would be considered usual, the witnesses -- we
19 did look at each other's testimony to insure that --
20 that we were giving correct dates and using correct
21 terms.
22 Q. Do you have your deposition transcript up there
23 with you?
24 A. I do.

1 Q. Okay. Great. Can you turn to page 4.
2 A. I'm there.
3 Q. You remember being sworn in at your deposition
4 just like today, right?
5 A. I do.
6 Q. You gave truthful testimony on Monday?
7 A. Absolutely.
8 Q. Okay. Good. On page 4, down at line 23, where I
9 was asking you about your testimony, I asked you
10 question, line 23: "And did you collaborate with Jeff
11 King?" What was your answer?
12 A. "Yes."
13 Q. Now, Miss Cecil's office also prepared the six
14 exhibits to your testimony, correct?
15 A. Under my direct control and supervision, yes.
16 Q. And you didn't make any substantive changes to
17 those exhibits that Miss Cecil's office prepared,
18 correct?
19 A. There was no need. They were totally accurate.
20 Q. You've been AT&T's lead negotiator with BellSouth
21 for interconnection agreements since March of 1999?
22 A. That's correct.
23 Q. And that was when you first joined AT&T's local
24 services and access management group?

1 A. That's correct.
2 Q. Okay. At the time you became AT&T's lead
3 negotiator, the parties had an interconnection agreement
4 in place, the first interconnection agreement, and y'all
5 began negotiating the second agreement; is that a fair
6 characterization?
7 A. There was an existing contract, which was the
8 first contract negotiated between the parties, and my
9 role was to initiate the second round of negotiations
10 through notice to BellSouth and then to actually
11 negotiate the language. So if that answers your
12 question.
13 Q. I think it does.
14 A. Okay.
15 Q. AT&T ultimately filed arbitration petitions
16 regarding the terms of the second interconnection
17 agreement in every state, other than Mississippi, in
18 every BellSouth state other than Mississippi
19 regarding -- asking for Commission resolution of certain
20 issues, right?
21 A. That's correct.
22 Q. And AT&T and BellSouth negotiated one agreement
23 for Mississippi because they determined they didn't want
24 to arbitrate there. And I'm sure it had nothing to do

1 with Mississippi. And essentially negotiated the other
2 eight states collectively. So you have a Mississippi
3 agreement and then you've got a separate set of language
4 that governs the other eight states, correct?
5 A. No. Initially when AT&T and BellSouth began
6 discussing the process that we would use for negotiating
7 the next or second round of interconnection agreements,
8 our discussions were that we would negotiate on a
9 region-wide basis; that we would, in fact -- when we
10 reached agreement on an issue, that that issue would be
11 region wide or would be applied in all of the BellSouth
12 states.
13 It is true that the Mississippi language was not
14 arbitrated, but it was -- it was the basis for all of
15 the continuing negotiations and arbitrations in the
16 other states. We did not deviate -- we didn't go choose
17 some other document to use as the base document that we
18 took with us into other negotiations and arbitrations in
19 the other states.
20 Q. Can you turn to page 23 of your deposition.
21 A. (Complies with request.)
22 Q. The testimony that you gave at the very bottom on
23 page -- excuse me. On line 25, Mississippi wasn't
24 negotiated?

1 A. Yes.
2 Q. Can you read that sentence and the one following
3 it?
4 A. Sure. "Mississippi was a negotiated arrangement
5 that was kind of a standalone arrangement done prior to
6 because we didn't want to arbitrate in Mississippi. So
7 we have one set of language in Mississippi. Then we
8 have other sets of language similar in the other
9 states -- identical in the other states."
10 Q. AT&T filed its petition for arbitration of the
11 second interconnection agreement here in North Carolina
12 in April of 2000, correct?
13 A. That's correct.
14 Q. And BellSouth filed a response to that petition,
15 right?
16 A. They did.
17 Q. And the Commission subsequently had a hearing on
18 that, I think in the summer of 2000, and issued an
19 order, correct?
20 A. July -- late July, early August.
21 Q. Then in early 2001 the parties began negotiating
22 again with respect to terms to be contained in the
23 second interconnection agreement, correct?
24 A. Could you be more specific? I'm not sure I

1 understand the question.
2 Q. After the arbitration was concluded here in North
3 Carolina, the parties --
4 A. And the order was issued? We had the order?
5 Q. Right.
6 A. Okay.
7 Q. The parties got together I think starting -- at
8 least is reflected in the notes that I saw from
9 Ms. Stevens starting -- and I guess she only started her
10 job then, so I don't mean to assign any meaning to that.
11 But again, starting in early 2001 the parties began
12 negotiating again to try to resolve issues for the
13 second interconnection agreement to be filed that year,
14 correct?
15 A. Based on the filing made with the Commission,
16 issues that were included on the arbitration matrix that
17 were shown as disagrees were -- we did continue to
18 negotiate those in an effort to resolve them such that
19 we could come back to the Commission and ask that that
20 issue be withdrawn from the matrix, as it would have
21 been closed by the parties.
22 Q. And in North Carolina, the second interconnection
23 agreement here was signed on July 19th, 2001, correct?
24 A. That's correct.

1 Q. And the parties negotiated the terms of that
2 agreement right up -- until right before the time it was
3 executed, right?
4 A. Yes.
5 Q. I think Miss Stevens testified to this a moment
6 ago, but you would agree that during the course of the
7 negotiations the parties exchanged red-lined versions of
8 the interconnection agreement?
9 A. Numerous times.
10 Q. You told me, at your deposition the other day,
11 that it was not your practice to take notes during
12 negotiating meetings with BellSouth, right?
13 A. That's correct.
14 Q. Your testimony states that the definition of local
15 traffic -- I'm looking on pages 5 and 6, if you need a
16 reference. The definition of local traffic was an
17 important issue to AT&T and that AT&T had been
18 attempting to get a definition of local traffic that
19 included all calls within a LATA since the 1996 act was
20 passed. That's your testimony, right?
21 A. It is.
22 Q. The first interconnection agreement between AT&T
23 and BellSouth did not have a LATAwide definition of
24 local traffic, correct?

1 A. It did not.
2 Q. And AT&T didn't ask the Commission to arbitrate
3 that issue in the first arbitration, correct?
4 A. I'm sorry. I wasn't a party to the first
5 arbitration, so I can't answer that question.
6 Q. You wouldn't dispute that? You don't have any
7 information to dispute that AT&T didn't seek arbitration
8 of that issue, do you?
9 A. Neither can I agree to it.
10 Q. Okay. Fair enough. Now, the first
11 interconnection agreement provided that whether traffic
12 was considered local was determined by how the
13 originating carrier billed its end user, essentially,
14 correct?
15 A. That's correct.
16 Q. So if the originating carrier billed its end user
17 for a toll interLATA call, then it had to pay the
18 terminating carrier switched access charges rather than
19 reciprocal compensation rates, correct?
20 A. Those were the terms of the first interconnection
21 agreement, yes.
22 Q. So if an AT&T customer, for example, made an
23 intraLATA toll call to a BellSouth customer, under the
24 first interconnection agreement, and AT&T billed its

1 customer toll rates, then AT&T would pay BellSouth
2 switched access rates for terminating that call,
3 correct?
4 A. Under the expired, replaced first interconnection
5 agreement, yes, those were the terms.
6 Q. Your testimony states that BellSouth agreed,
7 before AT&T filed its arbitration petition here for the
8 second agreement, that all intraLATA traffic would be
9 compensated at local recip comp rates, correct?
10 A. That's correct.
11 Q. And your testimony quotes language from the
12 red-lined interconnection agreement that AT&T filed
13 along with its arbitration petition that you say
14 BellSouth agreed to, right?
15 A. The language that AT&T filed in its arbitration
16 petition would have reflected the -- a couple of things.
17 It would have reflected language that the parties had
18 agreed to. And that would have been reflected in how
19 the language appeared in the document, whether it was
20 unbolded -- language that was agreed to was unbolded and
21 not underlined. It was just straight type.
22 Things that were in disagreement were formatted in
23 a disagree format and would state both parties'
24 positions. There were also items that were open, still

1 being discussed by the parties but we chose not to
2 arbitrate. So that's the document that was provided to
3 the Commission in our arbitration filing.
4 Q. Again, your testimony was that BellSouth had
5 agreed to a LATAwide definition of local traffic for
6 North Carolina prior to the time you filed your
7 arbitration petition here, right?
8 A. Yes.
9 Q. Now, let me hand you what we'll ask to be
10 identified as BellSouth Cross Exhibit Number 5. And
11 that is the cover page of the response BellSouth filed
12 to your arbitration petition along with language that
13 BellSouth filed in response to that arbitration
14 petition.
15 BELLSOUTH CROSS EXHIBIT NUMBER 5
16 (Identified)
17 Mr. Peacock, in your testimony on page 7 and
18 spilling over on to page 8, you quote some language that
19 was contained in the red-lined agreement you filed with
20 your arbitration petition. And you say that was the
21 language that BellSouth had agreed to regarding the
22 definition of local traffic, correct?
23 A. I'm sorry. You said testimony or deposition?
24 Q. Your testimony, page 7. You quote some language

1 there from the attachment 3 to the interconnection
2 agreement, red-lined, that you filed with your
3 arbitration petition and you said that BellSouth had
4 agreed to that language?
5 A. Yes, I did.
6 Q. Okay. If you look at what we've identified as
7 Cross Exhibit 5 -- and I'll represent to you that the
8 attachment 3 attached to the cover page there comes from
9 BellSouth's responsive filing to your arbitration
10 petition. Can you turn to page -- section 5.3.
11 A. Page 20.
12 Q. Page 20. Thank you. You see that there?
13 A. I do.
14 Q. BellSouth's version of the agreement doesn't
15 contain the language that you say BellSouth agreed to in
16 your testimony, does it, under compensation for local
17 traffic, 5.3.1.1?
18 A. It -- the language is different.
19 Q. Okay. And the language that BellSouth filed in
20 response to your arbitration petition regarding the
21 definition of local traffic was that local traffic means
22 any telephone call that originates and terminates in the
23 same LATA and is billed by the originating party as a
24 local call. Do you see that?

A. I do see that.

Q. And that was essentially the definition that was in the first interconnection agreement between the parties, correct?

A. It is. And may I say that if you go back to the previous versions of this document, you will not see this language, as represented in the BellSouth brief or reply. You would see the language that I have suggested was included or should have been included in the BellSouth filing.

Q. Did you ever amend your -- did AT&T ever amend its arbitration petition to ask this Commission to arbitrate the definition of local traffic?

A. No, we did not.

Q. Let me hand you what we'll ask to be marked as BellSouth Cross Exhibit Number 5 -- excuse me, 6. I made it to 5 without the mistake. That's a record.

BELLSOUTH CROSS EXHIBIT NUMBER 6

(Identified)

That's a version of attachment 3 to the interconnection agreement that we've all gotten familiar with, I think, already today; and it's dated, down at the bottom, 4/18/00. Do you see that?

A. I do.

1 Q. Okay. Can you turn to page 3. Do you see the
2 handwriting in the margin there?
3 A. Yes.
4 Q. Okay. Whose handwriting is that? Do you
5 recognize it?
6 A. Roberta Stevens'.
7 Q. What does it say?
8 A. 1.4 and 4/28, review with Dave Talbott, okay, with
9 unbolded language.
10 Q. Who's Dave Talbott?
11 A. Dave -- Dave Talbott is AT&T's network
12 architecture SME.
13 Q. And can you turn to page 19 of that document.
14 A. Certainly.
15 Q. Down at the bottom of page 19, section 5.3.1,
16 compensation for local traffic. You with me?
17 A. I am.
18 Q. Okay. That handwriting right above that,
19 different than AT&T 4/28 version, question mark, do you
20 see that?
21 A. I do.
22 Q. Do you know whose handwriting that is?
23 A. Miss Stevens'.
24 (Pause.)

1 Q. And how about above that, the handwriting, okay
2 with AT&T, next to 5.2. Is that Miss Stevens' writing?
3 A. Miss Stevens.
4 Q. Now, let's talk about the language that made its
5 way into the second interconnection agreement that the
6 parties signed in this case. BellSouth first proposed
7 that contract language with a LATAwide definition of
8 local and an exclusion for switched access arrangements
9 in the May 2001 time frame, correct?
10 A. That's correct.
11 Q. Okay. And you testified, at your deposition on
12 Monday, that the exception language at issue in this
13 case was first given to AT&T by BellSouth as part of a
14 proposal by BellSouth to resolve the issue of how to
15 treat ISP traffic. Do you recall that?
16 A. That's correct.
17 Q. Let me -- we've actually already identified this
18 as a cross-examination exhibit, and it's the
19 interconnection agreement dated 5/22/01.
20 MS. CECIL: Number 2.
21 MR. SHORE: Okay. Cross Exhibit Number 2.
22 BY MR. SHORE:
23 Q. Are those all up there, Mr. Peacock?
24 A. I have -- would it be Stevens Exhibit 3 also?

1 Q. It was Stevens Exhibit 3 from her deposition, yes,
2 sir.
3 A. I have that.
4 MR. SHORE: I'm also going to hand you --
5 COMMISSIONER ERVIN: That's Number 2,
6 Mr. Shore?
7 MR. SHORE: Yes, Commissioner Ervin. Hand you
8 another exhibit that we'll ask to be marked as BellSouth
9 Cross Exhibit Number 7.
10 COMMISSIONER ERVIN: You're going to work
11 Mr. Rankin to death here.
12 BELLSOUTH CROSS EXHIBIT NUMBER 7
13 (Identified)
14 BY MR. SHORE:
15 Q. Cross Exhibit Number 7, Mr. Peacock, is an e-mail
16 that AT&T produced to us, one of your e-mails, correct?
17 A. I'm sorry. Ask your question again, please.
18 Q. Cross Exhibit Number 7 is an e-mail that you
19 printed out it. Says Billy C. Peacock up at the top.
20 Do you see that?
21 A. I'm sorry. Yes, an e-mail from Michael Willis to
22 myself. Yes.
23 Q. Michael Willis is at BellSouth?
24 A. Yes.

1 Q. We can agree, can we not, that e-mail was
2 transmitting a red-lined version of attachment 3 to the
3 interconnection agreement and asking for AT&T's
4 feedback?
5 A. Yes, it does.
6 Q. And you've got part of attachment 3 stapled
7 together with your e-mail there in Exhibit 7, right?
8 A. I do, yes.
9 Q. The attachment to your May 22nd e-mail says
10 4/18/00 down at the bottom, does it not?
11 A. Yes. But as we've already testified, the dates
12 that appear at the bottom of these red-lines are not to
13 be taken always as correct. Several times the versions
14 that we received back from BellSouth were not correctly
15 identified by the date. It would -- what would occur
16 would be that language would come to us in -- that may
17 have gone through two iterations but still have the date
18 from the initial -- the date the initial language was
19 provided.
20 Q. You were here when Miss Stevens testified just a
21 little while ago that that's why she wrote 5/22/01 on
22 this particular version of Cross Exhibit 2, right?
23 A. Exactly. Exactly.
24 Q. Let's look at that exhibit, the one Miss Stevens

1 wrote 5/22/01 on it. And that's got all of attachment
2 3. Turn to page --
3 COMMISSIONER ERVIN: For purposes of the
4 record, Mr. Shore, we're talking about BellSouth
5 Cross-examination Exhibit 2, right?
6 MR. SHORE: Yes. Thank you.
7 BY MR. SHORE:
8 Q. Can you turn to page 20, Mr. Peacock.
9 A. Yes.
10 Q. You see there at the top, section 5.3.1?
11 A. Yes.
12 Q. This is the document where BellSouth first
13 proposed the language with the local traffic definition
14 as all calls in the LATA except for those calls that
15 originated or terminated through switched access
16 arrangements, correct?
17 A. As established by the ruling regulatory body, yes.
18 Q. Right. And the parties had discussions regarding
19 this language during negotiating meetings in June and
20 July of 2001, did they not?
21 A. The parties discussed this language as it related
22 to the arbitration issues that were still outstanding
23 prior to the finalization of the North Carolina ICA
24 language that was filed. So the answer's yes, but with

1 qualifiers.
2 Q. Thank you. AT&T requested, in fact, that the
3 language that BellSouth first proposed in the document
4 marked May 22nd be revised, right?
5 A. Can you be more specific as to what revision was
6 requested?
7 Q. Right. You asked that the term "as established by
8 the ruling regulatory body" be revised to read "as
9 established by the State Commission or FCC," correct?
10 A. Yes, we did make that request.
11 Q. And BellSouth agreed to that revision, correct?
12 A. Yes, they did.
13 Q. You never asked BellSouth what the term "switched
14 access arrangements" meant, correct?
15 A. No. We discussed the traffic, switched access
16 traffic and how that traffic would be compensated, but
17 we did not discuss switched access arrangement.
18 Q. And you never discussed internally, with anyone at
19 AT&T, what the term "switched access arrangements" meant
20 as it's used in this contract provision, correct?
21 A. My discussions with -- internally with AT&T dealt
22 with the transport of minutes and traffic and how
23 traffic would be defined that would transverse a
24 switched access arrangement. No one defined switched

1 access arrangement for me.
2 Q. Did you discuss, with anyone at AT&T, what
3 switched access arrangements meant --
4 A. No.
5 Q. -- before you signed the agreement?
6 A. (Shakes head from side to side.)
7 Q. Okay.
8 A. Again, we discussed the interrelationship between
9 the language in section -- I think -- I don't have the
10 right document in front of me, but in the section that
11 defined switched access service as it related back to
12 the definition in 5.3.1.1.
13 Q. You know, from your experience in the industry
14 before you were negotiating this contract, that the term
15 "arrangements" refers to the configuration of
16 facilities, correct?
17 A. It may.
18 Q. Well, you still have your deposition there?
19 A. I do.
20 Q. Okay. Can you turn to page 49.
21 A. I'm there.
22 Q. Okay. Down on line 15 I asked you if you ever
23 heard of trunking arrangements, and can you just read
24 your answer?

1 A. The answer's "yes."
2 Q. "And you've described some facilities?" Your
3 answer?
4 A. "Right."
5 Q. And my question was: "Then trunking arrangements
6 refers to those facilities and the configuration of
7 those facilities. Is that your understanding?" And
8 what was your testimony at your deposition?
9 A. "It would -- yes, it would define or describe the
10 facility, yes, used to carry that traffic."
11 Q. You also know, from your experience in the
12 industry, that State Commissions and the FCC established
13 switched access arrangements and switched access rates
14 pursuant to tariffs, correct?
15 A. Either through Commission Rule or through
16 approving tariffs, yes.
17 Q. AT&T and BellSouth resolved their dispute
18 regarding the treatment, for compensation purposes, of
19 ISP traffic by agreeing to implement the FCC's ISP order
20 on remand from April of 2001, right?
21 A. That's correct.
22 Q. And that agreement, as is set out on page 11 of
23 your testimony, is set forth at the beginning of section
24 5.3.1.1 of the original second agreement, correct?

1 A. Subject to check, yes.
2 Q. The language in the contract that says the parties
3 agreed that LATAwide traffic would be treated as local
4 except for calls terminated through switched access
5 arrangements, that was not part of the parties'
6 resolution of the ISP traffic issue, true?
7 A. The language that was provided in the exclusion
8 was provided to AT&T to consider specifically to keep
9 AT&T or other CLECs -- CLPs here in North Carolina, I'm
10 sorry, from trying to assert that other access services,
11 other than intraLATA toll, would be compensated at local
12 reciprocal compensation rates.
13 MR. SHORE: Commissioner Ervin, if I could
14 just ask, perhaps, for an instruction that he answer my
15 question and then provide whatever explanation he deems
16 necessary.
17 COMMISSIONER ERVIN: Mr. Shore, I don't think
18 we've been having a problem with that, but I mean if you
19 want to ask your question --
20 MR. SHORE: It must be my questions, then. I
21 apologize. Let me ask it this way, then --
22 COMMISSIONER ERVIN: I may have misunderstood
23 his answer, but I thought he'd answered your question.
24 BY MR. SHORE:

1 Q. Let me try to ask it this way --
2 A. Okay.
3 Q. -- as a yes or no question. If it can't be
4 answered yes or no --
5 A. I'll get to explain after I answer, of course?
6 COMMISSIONER ERVIN: Certainly.
7 BY MR. SHORE:
8 Q. Absolutely. Absolutely.
9 A. Thank you.
10 Q. Was the contract language at issue in this case,
11 specifically, that the parties agreed to treat all
12 LATAwide traffic as local except for those calls that
13 originated or terminated through switched access
14 arrangements as established by the State Commission or
15 FCC, part of the parties' resolution of the ISP traffic
16 issue?
17 A. Yes, that was one of the parts of the resolution.
18 Q. Can you turn to page 26 of your deposition,
19 Mr. Peacock.
20 A. I'm there.
21 Q. On line 21 do you see where I asked you: "Now, is
22 it your testimony that the sentence we talked about
23 beginning additionally -- now is the sentence that's
24 identical to this except it says additionally -- from

1 the original agreement was part of the parties'
2 resolution of the ISP traffic issue?" What was your
3 answer on Monday?
4 A. "No, not the resolution of the ISP issue."
5 Q. And what else did you say?
6 A. "But the language was negotiated at around the
7 same time that we were finalizing the language that we
8 would use as place holder language for ISP to implement
9 the ISP order."
10 Q. Now, for voice over internet protocol calls, the
11 parties agreed to disagree on how to treat those calls
12 and to comply with any FCC orders that came out
13 addressing that, correct?
14 A. Yes, the parties did agree to disagree. The issue
15 with voice over IP telephony calls was not an interLATA
16 issue. The parties agreed to the language in the
17 contract that says that an interLATA call, that AT&T
18 agrees that that would not be compensated at reciprocal
19 compensation rates. So BellSouth's concern or if
20 you'll -- if we need to refer to the language itself,
21 says that calls that cross a local calling area, which
22 would be an intraLATA call, a voice over internet
23 protocol intraLATA call. So yes, it did address
24 BellSouth's concerns.

1 Q. For voice over internet protocol calls, the
2 parties, for purposes of their second interconnection
3 agreement, said we'll agree to disagree, we have a
4 disagreement about that issue, how they ought to be
5 treated, we'll agree to disagree and we'll follow any
6 FCC rules that come out, correct?
7 A. And agreed not to -- you're correct, but you need
8 to finish that we also agreed that a call that is
9 interLATA in nature, that neither party would attempt to
10 define that as a local call for purposes of reciprocal
11 compensation.
12 Q. The language in the interconnection agreement that
13 sets forth the definition of local traffic and has the
14 exception for switched access arrangements, that wasn't
15 part of the parties' resolution of the voice over
16 internet protocol calls issue, was it?
17 A. I'm sorry. Ask your question again, please.
18 Q. The language that sets forth the definition of
19 local traffic and contains the exception for switched
20 access arrangements, that was not put in the contract as
21 part of the parties' resolution of the voice over
22 internet protocol calls issue, was it?
23 A. Yes, the exclusion was placed there such that,
24 again, there were -- there were specifically two issues

that our understanding was that BellSouth had offered this language; and that dealt with ISP, whether or not dial-up ISP traffic would be considered interstate versus local and voice over IP for the intraLATA portion of voice over IP, whether that would be compensated at -- via reciprocal compensation rates and other access services that were not specifically addressed in the negotiations.

Q. Can you turn to page 27 of your deposition from Monday.

A. I'm there.

Q. Okay. Page 27, down at line 22 --

COMMISSIONER ERVIN: All right. Mr. Shore, it is now 12:30. We're going to need to take our lunch recess and we'll reconvene at 1:30. So just mark your place and we'll pick it back up at 1:30.

(A luncheon recess was had.)

WHEREUPON, this hearing was recessed.

---

1 CERTIFICATE

2 The undersigned Court Reporter certifies that
3 this is the transcription of notes taken by him during
4 this proceeding and that the same is true, accurate and
5 correct.

6

7 Paul Walker
8 Court Reporter II

9
10
11
12
13
14
15
16
17
18
19
20
21
22
23
24

PLACE: Dobbs Building, Raleigh, North Carolina

DATE: Wednesday, January 22, 2003

DOCKET NO.: P-55, Sub 1376

TIME IN SESSION: 1:30 p.m. - 3:00 p.m.

BEFORE: Commissioner Sam J. Ervin, IV, Presiding
Commissioner J. Richard Conder
Commissioner Robert V. Owens, Jr.
Commissioner James Y. Kerr, II
Commissioner Michael S. Wilkins

IN THE MATTER OF:

Complaint of AT&T Communications of the Southern States, LLC, Teleport Communications Group, Inc. and TCG of the Carolinas, Inc. for enforcement of interconnection agreements with BellSouth Telecommunications, Inc.

VOLUME 2 of 3

A P P E A R A N C E S:

FOR BELLSOUTH TELECOMMUNICATIONS, INC.:

Edward L. Rankin, III
General Counsel - North Carolina
Post Office Box 30188
Charlotte, North Carolina 28230
and
Andrew D. Shore
Attorney at Law
675 West Peachtree St. N.E., Suite 4300
Atlanta, Georgia 30375

FOR THE AT&T COMPANIES:

Loretta A. Cecil
Womble, Carlyle, Sandridge & Rice
1201 West Peachtree Street, Suite 3500
Atlanta, Georgia 30309

FOR THE USING AND CONSUMING PUBLIC:

Robin Cauthen, Staff Attorney
Public Staff - N.C. Utilities Commission
4326 Mail Service Center
Raleigh, North Carolina 27699-4326

1 INDEX OF EXAMINATIONS

2 PAGE

3 BILLY PEACOCK
Cont'd. Cross (Mr. Shore) 3
4 Cross (Mr. Cauthen) 9
Redirect (Ms. Cecil) 14
5 Exam. (Commissioner Ervin) 23
Exam. (Mr. Shore) 26
6 Exam. (Mr. Cauthen) 27
Exam. (Commissioner Ervin) 29
7
ELIZABETH SHIROISHI
8 Direct (Mr. Shore) 31
Cross (Ms. Cecil) 49
9

10 EXHIBITS IDENTIFIED

11 PAGE

12 ERAS Exhibit 1 32
13 AT&T Shiroishi Cross Exhibit 1 71
14 AT&T Shiroishi Cross Exhibit 2 81
15

16 EXHIBITS ADMITTED

17 PAGE

18 BellSouth Cross Exhibit 5 - 7 30
19
20
21
22
23
24

1 COMMISSIONER ERVIN: Let's come back to order
2 please. Mr. Shore, I believe we were with you when we
3 decided to go get sustenance.
4 MR. SHORE: Thank you, Mr. Chairman. And your
5 timing was terrific.
6 COMMISSIONER ERVIN: Well that depends on
7 whether you got recharged or reorganized here.
8 MR. SHORE: Well, I'm not sure I got
9 reorganized but I got food.
10 BILLY PEACOCK; Having been previously sworn,
11 the witness resumes stand,
12 and continues with testimony:
13 CONT'D. CROSS-EXAMINATION BY MR. SHORE:
14 Q. Mr. Peacock, before we left, I asked you to look
15 at some deposition testimony you gave this past Monday,
16 and I think I directed you to be the citation right
17 before we broke for lunch on page 27. Are you there
18 now?
19 A. I am.
20 Q. Do you see the question that I asked you at the
21 bottom of page 27. Is it your testimony that the
22 sentence we're looking at in 5 -- I think I've been
23 saying 5.1.1.1 -- I mean to be saying 5.3.1.1 -- but
24 it's the sentence, Additionally, the parties agree that

1 you quote on page 12. Is it your testimony that the
2 sentence was put in as part of the parties resolution of
3 the Voice Over issue. And what was your answer?
4 A. The language was -- let me go back and say no.
5 The language was included through the negotiations to
6 deal with not just Voice Over IP, but the issue of any
7 other access services that AT&T or another CLP in North
8 Carolina would suggest to BellSouth should be treated as
9 local for reciprocal compensation purposes.
10 Q. And you testified that as Ms. Shiroishi told you
11 that that exception clause was put in to deal with other
12 access services, correct?
13 A. Yes.
14 Q. And when I asked you what other access services
15 you were referring to, you testified at your deposition
16 any Feature Group, A, B, C, any other access services
17 that would be defined by the FCC or the State
18 Commission, correct? It's on page 68.
19 A. On page 68 of my deposition?
20 Q. Yes, sir.
21 A. I didn't realize there were that many pages. The
22 question was what other access services are you
23 referring to? My response was: Any Feature Group, A,
24 B, C, or any other access services that would be defined

1 by the FCC or by the State Commission.
2 Q. You also testified that other than Ms. Shiroishi
3 telling you that that exclusion language was to exempt
4 other access services from recip comp payments, she
5 didn't say anything else to you about the purpose of
6 that exclusion, correct?
7 A. That's correct.
8 Q. And you told Mr. King that the exclusion for
9 switched access arrangements in the agreement was to
10 address BellSouth's concerns that AT&T would claim
11 access services subject to recip comp rates, right?
12 A. Other access services, specifically ISP-bound
13 traffic as well as Voice Over IP traffic or any other
14 access service as is stated in the arbitration matrix
15 issue 18.
16 Q. And you also defined -- we just went over -- you
17 used the term other access services to describe any
18 Feature Group A, B, C, and any other access services
19 that would be defined by the FCC or the State
20 Commission, is that right?
21 A. That's correct.
22 Q. Your testimony states that before you filed the
23 testimony in this case you reviewed AT&T's meeting notes
24 from the June-July 2001 time frame, right?

1 A. Yes, I did.
2 Q. And what you're referring to there, those are
3 Ms. Stevens' notes, correct?
4 A. The notes made by Ms. Stevens as well as any
5 notations on the redlined drafts.
6 Q. And your testimony states on page 21 that you
7 didn't find anything in Ms. Stevens' notes that
8 contradicted the story that's set forth in your
9 testimony, is that correct?
10 A. That's correct.
11 Q. The fact is there's nothing in those notes that
12 confirms your recollection of the event that's set forth
13 in your testimony either, correct?
14 A. No, I wouldn't agree with that. The notations
15 from Ms. Stevens do -- are addressed in my testimony.
16 Q. Okay. Well --
17 A. Is a particular -- if you wish to reference a
18 particular part of the testimony I'll address that.
19 Q. Well, you talk about diagram and how she has notes
20 in there stating that those are related to a point of
21 interconnection issue, correct?
22 A. The notations that Ms. Stevens took in that
23 meeting do state that the diagrams would have been
24 referencing discussions around local channel and

1 dedicated transport.
2 Q. Other than that notation dealing with that issue,
3 you don't cite in your testimony anything else from
4 Ms. Stevens' notes that you say confirms your story, do
5 you?
6 A. There are no other cites, but if there had been an
7 issue as important as this one, it would have
8 appeared -- if that issue had been discussed it would
9 have appeared in the notations.
10 Q. Now your testimony states on page 18 that there
11 was at one point a section, I think it was 5.4, in
12 attachment 3 that was later deleted, right?
13 A. That's correct.
14 Q. And that was the section that defined intraLATA
15 toll traffic and provided that for such traffic the
16 originating party would pay switched access rates as set
17 forth in the determinating party's switched access
18 tariff, correct?
19 A. That's correct.
20 Q. So, for example, under that language if AT&T
21 billed its customer as toll for an intraLATA call, when
22 the customer called the BellSouth customer that language
23 would provide that AT&T would pay BellSouth switched
24 access rates, correct?

1 A. For an AT&T customer that made an intraLATA toll
2 call to a BellSouth customer then, yes, the language
3 that was deleted would have provided BellSouth the
4 ability to charge AT&T switched access?
5 Q. Now, AT&T did not request that the language set
6 forth on pages 18 and 19 of your prefiled testimony be
7 deleted from the contract, correct?
8 A. We did not. Once it was -- once BellSouth asked
9 us to delete it we certainly did agree.
10 Q. And BellSouth requested that, and as you stated on
11 page 19 of your testimony, a July 18, 2001 e-mail from
12 Ms. Shiroishi where she stated, "I realize we don't need
13 the intraLATA stuff so I've redlined it," correct?
14 A. That's correct. It would have been at the same
15 time that we -- within the day or two of also us taking
16 out intrastate, intraLATA from the definition of
17 switched access.
18 Q. And it was after the parties had agreed to the
19 local traffic definition and the exclusion for switched
20 access arrangements, correct?
21 A. That we agreed to delete the intraLATA
22 compensation?
23 Q. Yes, sir.
24 A. This language was agreed to either on the 18th,

1 just prior to the signing of the contract, so it would
2 have to have been at the same -- on the same day.
3 Because we never agreed to this language until we were
4 satisfied that it met our -- that it provided what we
5 thought it provided.
6 Q. Is it your testimony that you didn't agree to this
7 language on July 16th or 17th.
8 A. Yes, it would have been on -- it would have been
9 the day prior -- the day before the execution of the
10 language.
11 Q. That's all I have.
12 A. Okay.
13 COMMISSIONER ERVIN: Mr. Cauthen.
14 CROSS-EXAMINATION BY MR. CAUTHEN:
15 Q. Mr. Peacock, my name is Robin Cauthen. I'm an
16 attorney with the Public Staff?
17 A. Yes, sir.
18 Q. In your summary you said that the language in your
19 executed agreement was changed to reflect the addition
20 types of traffic, specifically Internet Provider traffic
21 and Voice Over Internet Protocol traffic that originated
22 or terminated through switched access arrangements would
23 be excluded from LATA-wide local, is that right?
24 A. That's correct.

1 Q. Where is that in the agreement?
2 A. In the agreement --
3 Q. Uh huh.
4 A. -- you will not find the language structured in
5 that exact form. I'm sorry would you reference for me
6 my testimony where you were reading.
7 Q. No, it's in your summary.
8 A. I'm sorry. In my summary.
9 Q. On page 3, you say the language in our executed
10 agreement was changed to reflect that additional types
11 of traffic and so forth. Are you with me?
12 A. Yes, I am with you.
13 Q. Where is that in the agreement?
14 A. The language change was the change that you see
15 here before you in 5.3.1.1. The inclusion of the
16 exception is the language change that I'm referencing.
17 But to say that there's language in the contract that
18 says that change was specifically for these reasons, you
19 won't find that. What you have to do is go back and
20 look at the arbitration filing between the parties, you
21 have to look at the disagrees that were set up in that
22 filing, and those disagrees are what we were continuing
23 to negotiate and those disagrees were the treatment of
24 ISP-bound traffic and other access services such as

1 Voice Over Internet Protocol. So, again, in answer to
2 your question, you will not see the specific exception
3 included in the contract.
4 Q. Okay. What calls as of today are originated or
5 terminated through switched access as established by a
6 state commission or FCC? I'm still having trouble with
7 that language.
8 A. I understand. The -- if you look outside this
9 contract at perhaps other contracts that BellSouth may
10 have with other CLPs, you may find that both intrastate
11 interLATA and intrastate intraLATA, which is that
12 question here today, may be being compensated for
13 switched access rates. If that CLP doesn't have the
14 same language that we have. So the answer to your
15 question is there are still agreements in place between
16 ILECs and other CLECs that provide for switched access
17 charges, again for intrastate intraLATA and intrastate
18 interLATA as well as the traditional interstate
19 interLATA. Those are the -- in the past those have been
20 the type traffics that have been addressed or rated with
21 switched access rates.
22 Q. When you say established by the State Commission
23 or FCC, do you mean that the Commission or FCC approves
24 an agreement that says that?

1 A. Again, this is BellSouth's language so I'm --
2 Q. (Interposing) Well, you cited it so you must
3 understand it.
4 A. Well, I authorized the signature. The established
5 part addresses in my mind what the traffic is and how
6 the FCC and the State Commissions address the definition
7 of traffic and whether traffic is compensated as a local
8 minute or a switched access minute. So they don't --
9 the FCC and the State Commissions, they don't establish
10 arrangements. That's the industry that establishes
11 arrangements. But the State Public Service Commission,
12 or in this case, the Public Utilities Commission and the
13 FCC would rule on the traffic that would be included or
14 transported over those arrangements.
15 Q. Okay. So the word established in here was sort of
16 a mistake?
17 A. The parties could have probably established --
18 could have probably picked a better word perhaps. If
19 it's confusing --
20 Q. (Interposing) Well, you just said that they don't
21 establish.
22 A. They don't establish arrangements.
23 Q. And this talks about their establishing. So if
24 they don't do it then there's something wrong with this,

1 isn't there?
2 A. I agree.
3 Q. And what does it mean when the Commission or the
4 FCC approves or adopts that -- I mean they don't
5 actually adopt it either, do they? They would approve
6 something in it.
7 A. Well, a company would file a tariff -- again, if
8 we're talking about tariffs, would file a tariff with
9 the FCC. And in the past the FCC would have approved
10 that tariff and sent an approving order. Today I'm not
11 sure if that's even done or if they just become
12 effective after a certain number of days after they are
13 filed. So the Commission -- the FCC has the power to
14 either accept or reject the language that's filed by a
15 company.
16 Q. And that would be establishing --
17 A. (Interposing) In my mind that's --
18 Q. That's what this means --
19 A. In my mind that's what establishing --
20 Q. Approving or allowing to go into effect?
21 A. Yes, sir.
22 MR. CAUTHEN: Okay. That's all. Thank you.
23 COMMISSIONER ERVIN: Ms. Cecil, do you have
24 any redirect?

1 MS. CECIL: I do.
2 REDIRECT EXAMINATION BY MS. CECIL:
3 Q. Mr. Peacock, I'd like for you to look at BellSouth
4 Cross Exhibit Number 5 which is the BellSouth response
5 to the AT&T arbitration petition.
6 COMMISSIONER ERVIN: Ms. Cecil, could you get
7 a little closer to the mike. I'm having trouble -- I'm
8 having trouble -- it's not your fault. I think it's
9 just that we have mikes that don't have very far pick-up
10 ranges.
11 Q. (MS. CECIL) So this is BellSouth Cross Exhibit
12 Number 5.
13 A. Mine are not marked. I am sorry. It would be
14 dated --
15 Q. It's a letter dated May 22, 2000 from Mr. Rankin
16 to Geneva Thigpen.
17 A. I do not have that here. I'm sorry, yes, I do.
18 Yes, I do.
19 Q. Now, Mr. Shore drew your attention to page 20 of
20 that exhibit. I'll ask you to look at that page as
21 well.
22 A. I'm there.
23 Q. Now, Mr. Shore asked you about the language in
24 5.3.1. And is this the language that BellSouth included

1 as being their understanding of what was outstanding?
2 A. From Mr. Shore's statements, yes, BellSouth
3 included this language as their view of what was still
4 outstanding between the parties.
5 Q. Okay. Now, when you go down to the language, it
6 says disagree, AT&T proposal, BST proposal.
7 A. Yes.
8 Q. How would BellSouth know what to include for an
9 AT&T proposal?
10 A. They would not have unless we had provided that to
11 them.
12 Q. All right. So you believe that the language where
13 it says AT&T proposal was provided to BellSouth by AT&T?
14 A. Yes, it was.
15 Q. And does it not state there that AT&T's position
16 is that local traffic does not include traffic that
17 originates from or terminates to or through an enhanced
18 service provider or information service provider. Do
19 you see that?
20 A. Yes.
21 Q. And information service provider, is that the same
22 from your perspective as an ISP?
23 A. Yes, it is.
24 Q. Do you know what an enhanced service provider was?

1 A. It would be a company that was providing
2 non-traditional voice traffic adding some value or some
3 extra component to the transmission of the signal or the
4 service.
5 Q. Okay. Now, under the language BST Proposal, which
6 is in bold, do you see that BellSouth is saying local
7 traffic does not include traffic that originates from or
8 is directed to or through an enhance service provider or
9 information service provider?
10 A. Right. The two paragraphs would read the same
11 except in ours not -- the not in the later part of that
12 sentence, I'm sorry, the middle part of the sentence
13 doesn't exist. That was the disagree. Otherwise we
14 could have agreed to the language but the not, the
15 negative was the disagree in that paragraph.
16 Q. Let's continue to look at the BellSouth position.
17 The language goes on to say, as further clarification,
18 local traffic does not include traffic that consists of
19 minutes of use from any end-user customer that relies
20 upon a call placed by that end-user customer or on the
21 end-user customer's behalf to establish and maintain a
22 network connection if A, B and C. Do you know why that
23 language was included?
24 A. Yes, I do. It has to do with something

1 Commissioner Ervin mentioned earlier, the US LEC
2 proceeding that occurred here in North Carolina, where
3 US LEC was putting up a connection just for the
4 purpose -- making a network connection just for the
5 purpose of creating minutes, rolling up minutes that
6 they wished to be compensated by from BellSouth as
7 reciprocal compensation minutes.
8 Q. So did you take from this BST proposal language
9 that their concerns about the definition of local
10 traffic related to ISP traffic related to other advanced
11 service provider traffic and then the US LEC problem.
12 A. And also the disagree that you would find in
13 5.3.1.7 on page 21 --
14 Q. Uh huh.
15 A. -- Where neither party shall represent access
16 services traffic. And, again, we give the examples of
17 internet protocol telephony Feature Group A, B, et
18 cetera, as local traffic for the purposes of reciprocal
19 compensation. So, in total, those three things would
20 have been -- would be the answer to your question.
21 Q. And what BellSouth listed here as their disagree,
22 was that consistent with what you had been told earlier
23 by folks at BellSouth --
24 A. (Interposing) Yes.

1 Q. -- about their problems with the definition of
2 local traffic --
3 A. (Interposing) Yes.
4 Q. -- and lead to that exclusion?
5 A. Yes.
6 Q. Let's go also to BellSouth Cross Exhibit Number 7?
7 A. That has the e-mail from Michael Willis to me?
8 Q. Yes.
9 A. Okay. I'm there.
10 Q. Now, I noticed that this version of the redlined
11 contract has at the bottom of it 4-18-00. Do you know
12 whether or not this was language that was good as of
13 4-18-00?
14 A. The 4-18-00 tells me that the parties either
15 exchanged the language on that date or renegotiated and
16 made changes to the language on that date.
17 Q. Well, how do you explain Michael Willis from
18 BellSouth sending you an e-mail on May 22nd which has
19 this redlined copy of the contract and she had it dated,
20 or it was dated 4-18-00?
21 A. Again, I think I may have mentioned this earlier
22 in response to a question from Mr. Shore, there were
23 numerous occasions where we would receive a document
24 back from BellSouth with an incorrect footnoted date.

1 And there were even situations where we would have to
2 work from two sets of language dated with two separate
3 dates just to negotiate with BellSouth.
4 Q. So if you turn over to page 20 of this document
5 which is dated 4-18-00, but it's attached to an e-mail
6 from BellSouth dated May 22nd, can you conclude from
7 looking at this document that the language in 5.3.1.1
8 was provided by BellSouth on 4-18-00 or was it May 22,
9 2001?
10 A. I can only answer since it was provided to us with
11 the e-mail on May 22nd.
12 Q. Who had document control over the redlined
13 contract?
14 A. BellSouth.
15 Q. Did AT&T ask to have control at the beginning of
16 the negotiations?
17 A. We did.
18 Q. What was BellSouth's position?
19 A. No.
20 Q. So from a process perspective, if there was
21 language to be included in any of these redlined
22 versions who would actually do the typing of that
23 language?
24 A. BellSouth.

1 Q. I want to ask you a couple of questions about your
2 deposition and then we'll be finished. If you will turn
3 to page 49 of your deposition.
4 A. Yes, ma'am.
5 Q. Mr. Shore asked you questions about this page of
6 your deposition regarding the definition of switched
7 access arrangements, do you remember that?
8 A. I do.
9 Q. Is there any question on this sheet of paper, page
10 49, that deals with switched access arrangements?
11 A. There is not.
12 Q. It all deals with trunking arrangements, is that
13 correct?
14 A. That's correct.
15 Q. Final question: If you will turn to page 69 of
16 your deposition.
17 A. Yes, ma'am.
18 Q. Actually 68, let's start at the bottom of 68 for
19 clarification purposes.
20 A. Okay.
21 Q. Mr. Peacock asked -- I'm sorry -- Mr. Shore asked
22 you a question beginning at line 13. Mr. Peacock, we
23 were talking earlier about the definition of local
24 traffic and its exclusion in switched access

1 arrangements. And your testimony was that it was your
2 understanding that that exclusion was to deal with, I
3 think you said, ISP traffic, Voice Over Internet
4 Protocol traffic, and other access services. And your
5 answer was?
6 A. That's right.
7 Q. Next question was: What other access services are
8 you referring to? What was your answer?
9 A. Any feature group A, B, C, or any other access
10 services that would have been defined by the FCC or by
11 the State Commission.
12 Q. Let's go over to page 69. And at line 13 there
13 was a question asked by me on redirect.
14 A. Yes.
15 Q. The question was: Now, with respect to the
16 question Mr. Shore just asked you, when you mentioned
17 Feature Group A, Feature Group B, and other kinds of
18 traffic, what was that within the context of intrastate
19 or interstate traffic? And what was your answer.
20 A. After Mr. shore's objection to the form I answered
21 interstate.
22 Q. Do you know in your testimony or anywhere in any
23 of the testimony you may have there, if you have the
24 definition of switched access traffic from section

1 5.3.3? If you don't I'll turn the chart around for you.
2 A. It's probably -- it's an exhibit to -- it would
3 probably be easier if you will just provide it to me.
4 Thank you. Yes, ma'am, I have it.
5 Q. So in your deposition when you talked about other
6 access services, again you mentioned Feature Group A, B,
7 C, and others, correct?
8 A. Yes.
9 Q. On the definition of switched access traffic,
10 5.3.3, is there a reference there, the Feature Group A,
11 B, and D?
12 A. Yes.
13 Q. And how is it used in the context of this
14 provision?
15 A. It is used in the definition of switched access
16 traffic saying what's included and the following types
17 of traffic that would be included in the switched access
18 traffic.
19 Q. So it would be Feature Group A, B, and D related
20 to either intraLATA or interLATA interstate?
21 A. I'm sorry. Yes. As it says in the sentence above
22 it would be interLATA traffic whether intrastate or
23 interstate it would be interLATA traffic.
24 MS. CECIL: No further questions.

1 COMMISSIONER ERVIN: Questions from the
2 Commission? Mr. Peacock, I have one and this may be a
3 totally stupid question. Bear with me if it is.
4 EXAMINATION BY COMMISSIONER ERVIN:
5 Q. If, in fact, the words "switched access
6 arrangements" in 5.3.1.1 ought to be construed to mean
7 essentially switched access traffic as defined in 5.3.3.
8 Why didn't you just suggest that the capitalized term is
9 defined in 5.3.3 be substituted for the term that
10 actually appears in the agreement?
11 A. That's an excellent question.
12 Q. I wouldn't go that far.
13 A. The negotiation of --
14 Q. (Interposing) I mean other than the fact that it
15 wouldn't fit per --
16 A. Exactly.
17 Q. -- as it's written. Why didn't you just go back
18 and say we've got this defined term why don't we use it?
19 A. In negotiating contracting language it's a
20 building block process and you start with a set of
21 language and you modify that language over time based on
22 the negotiations.
23 Q. All right. I've negotiated one or two myself, not
24 interconnection agreements but contracts in general.

1 A. So it's extremely difficult at times to go back
2 and renegotiate something that may have already been
3 discussed and agreed to --
4 Q. (Interposing) Even if it means the same thing
5 which is what I understand you to be telling me?
6 A. In our -- in AT&T's mind it was the same thing.
7 But again we never --
8 Q. (Interposing) And what I'm -- the reason I -- and
9 I don't mean to push you but what I understand you to be
10 telling me is, among other things, that in our mind the
11 language that's in 5.3.1 meant the same thing as the
12 definition in 5.3.3 and that that was clear to
13 everybody. If, in fact, that was clear to everybody why
14 would it have been any trouble to say, oh well we've
15 already got this defined term in 5.3.3, why don't we use
16 it to avoid future problems?
17 A. That would have been a sensible approach.
18 Q. Well, we obviously didn't do it.
19 A. No.
20 Q. And was it -- was doing that ever discussed?
21 A. Again --
22 Q. (Interposing) Internally or with BellSouth?
23 A. The interrelationship language that appears at the
24 end of 5.3.5 gave us a confidence that, in fact, they

1 were interchangeable --
2 Q. (Interposing) You mean 5.3.3.
3 A. I'm sorry, 5.3.3, yes, and so we did not push the
4 issue with those.
5 COMMISSIONER ERVIN: That's all I have.
6 Commissioner Kerr, who knows more about
7 contracts than I do, wants to follow-up on that.
8 EXAMINATION BY COMMISSIONER KERR:
9 Q. If the interrelation language in 5.3.3 were not
10 intended to tie back in for the reason you just stated
11 in the answer to Commissioner Ervin's questions, what
12 other purpose might it have served.
13 A. None. Just none. That was the purpose.
14 COMMISSIONER KERR: Thank you.
15 COMMISSIONER ERVIN: Are there questions based
16 on the questions that Commissioner Kerr and I asked that
17 probably confused the record? Mr. Shore.
18 MS. CECIL: I'll reserve.
19 COMMISSIONER ERVIN: Always ask -- go ahead,
20 Mr. Shore.
21 COMMISSIONER KERR: Y'all need to understand.
22 Commissioner Ervin and I screwed up a lot of these
23 things in our private practices so we are experts to ask
24 these kinds of questions.

1 COMMISSIONER OWENS: I hear that.
2 COMMISSIONER ERVIN: I was going to say, you
3 know, the statute of limitations has run on me; it
4 hasn't on you.
5 COMMISSIONER KERR: Strike that, Kim, please.
6 COMMISSIONER ERVIN: Go ahead.
7 EXAMINATION BY MR. SHORE:
8 Q. Mr. Peacock, in response to Commissioner Ervin's
9 question, you testified that sometimes when you're
10 negotiating these contracts that you agree with things
11 and then you move on. The other issue -- and it's hard
12 to go back and renegotiate something that's already been
13 agreed to?
14 A. That's correct.
15 Q. In this case, in fact, you agreed to the language
16 in 5.3.1.1 before you negotiated the language in 5.3.3,
17 correct?
18 A. No. That is not correct.
19 Q. Your testimony is that's not how it happened?
20 A. That's correct.
21 COMMISSIONER ERVIN: Ms. Cecil, you had
22 reserved your right --
23 MS. CECIL: I have no questions, Your Honor.
24 COMMISSIONER ERVIN: All right. Mr. Cauthen.

1 EXAMINATION BY MR. CAUTHEN:
2 Q. In relation to Commissioner Ervin's question, I
3 still would like for someone to explain to me why you
4 are excluding a group of calls that are defined as
5 interLATA, the ones in 5.3.3 from local intraLATA calls.
6 How could they ever be in there to start with?
7 A. If you take, for example, ISP-bound traffic.
8 ISP-bound traffic can physically be intraLATA traffic.
9 The call can originate and terminate within the LATA.
10 So it would be by definition intraLATA if you -- based
11 on what I just described, but the FCC has said, no, in
12 fact, it's interstate jurisdictionally. So, therefore,
13 there would need to be language -- or language was used
14 to -- to establish the fact that AT&T would not at some
15 future date come back and try to say that that intraLATA
16 ISP traffic was, in fact, interstate. I'm sorry just
17 the opposite of that. That we would not come back at
18 some later date and say that that jurisdictionally
19 interstate traffic perhaps should be considered
20 intraLATA. Voice Over Internet Protocol traffic is the
21 same -- could be the same thing. It can be traffic that
22 just crosses a local calling boundary within a BellSouth
23 calling area and be intraLATA without ever being an
24 interLATA call. So those two calls have the possibility

1 of being intraLATA. And because of that, the language
2 that we agreed to would exclude us from ever trying to
3 assert that those two types of calls would, in fact, be
4 intraLATA.
5 Q. Those are calls, at least in the case of the ISP,
6 that the FCC has already said are not local, right?
7 A. Yes, sir, they did through their ISP order. And
8 we developed place holder language that said once the
9 ISP order was final, not appealable, we would come back
10 in and put that language in. So the same thing has to
11 do with void where the parties based on the North
12 Carolina Commission's decision in the Voice Over
13 Internet Protocol, it ruled that it would not be
14 included in the definition of switched access. So the
15 parties decided that we would just do place holder
16 language.
17 Q. Are there any other calls not covered by the ISP
18 or the VOIP that that could apply to? Or are those the
19 only classes?
20 A. There could be circumstances where Feature Group
21 A, or C again as we've said someone could make an
22 argument that rather than be interstate in nature they
23 could be intraLATA in nature.
24 MR. CAUTHEN: Okay. That's all. Thank you.

1 EXAMINATION BY COMMISSIONER ERVIN:
2 Q. Mr. Peacock, I'm going to truly show that I may be
3 misunderstanding things. My question originally assumed
4 that the language in 5.3.3 preceded the final language
5 in 5.3.1.1. Was I wrong in making that assumption?
6 A. I'm sorry.
7 Q. I had assumed when I asked you the question that
8 started this latest round of confusion that the
9 language -- the definition of switched access traffic in
10 5.3.3 existed prior to the finalization of the language
11 in 5.3.1.1. Was I wrong in making that assumption?
12 A. No. No, the agreement -- it's really when we
13 would have agreed to the language -- I think may be
14 key -- we agreed to this language and adjusted it to
15 meet our needs --
16 Q. (Interposing) When you say this language you're
17 talking about --
18 A. -- I'm sorry --
19 Q. -- 5.3.3.
20 A. 5.3.3 was agreed to and that's what we based our
21 acceptance of the exclusion.
22 Q. All right. So I was correct in assuming that the
23 definition of switched access traffic existed before the
24 creation of the exception language that we've been

1 talking about in 5.3.1.1?
2 A. Or before AT&T agreed to the language.
3 COMMISSIONER ERVIN: Yes. Okay. Any further
4 questions on my last question. Thank you, Mr. Peacock.
5 We appreciate you coming to be with us.
6 (WITNESS EXCUSED)
7
8 COMMISSIONER ERVIN: Mr. Shore, do you want to
9 move the admission of the last set of cross exhibits
10 which I think went through number 7?
11 MR. SHORE: Yes, sir, I would.
12 COMMISSIONER ERVIN: Then they will be
13 admitted into evidence.
14 BELLSOUTH CROSS EXHIBITS 5 - 7
15 ADMITTED
16 COMMISSIONER ERVIN: Ms. Cecil, just to
17 protect the record, I think when I admitted the
18 testimony and exhibits of Mr. Peacock I forgot to say
19 that that was subject to the prior ruling that I made on
20 the renewed motion to strike and that language should
21 have been inserted at the time that I moved to -- or
22 that I allowed the motion to -- Mr. Peacock's testimony.
23 I forgot to condition the admission of his testimony on
24 my ruling on the motion to strike as I had done on

1 Mr. Kings and Mr. King's rebuttal and Ms. Stevens's
2 rebuttal and I just want to make sure that I had done
3 that for purposes of the record.
4 MS. CECIL: Thank you.
5 COMMISSIONER ERVIN: I believe that completes
6 your case, does it not?
7 MS. CECIL: It does.
8 COMMISSIONER ERVIN: So at this point, I
9 believe, Mr. Shore, the ball's in your court.
10 MR. SHORE: BellSouth would call Elizabeth
11 Shiroishi.
12 ELIZABETH SHIROISHI; Being first duly sworn,
13 testified as follows:
14 COMMISSIONER ERVIN: Mr. Shore, if you would
15 proceed please.
16 DIRECT EXAMINATION BY MR. SHORE:
17 Q. Can you state your full name and business address
18 for the record please?
19 A. My name is Elizabeth R.A. Shiroishi. My business
20 address is 675 West Peachtree Street, Atlanta, Georgia
21 30375.
22 Q. Are you employed by BellSouth Telecommunications?
23 A. Yes, I am.
24 Q. In what capacity?

A. I am an assistant director for negotiations.

Q. Did you cause to be prefiled in this docket, Ms. Shiroishi, 11 pages of prefiled testimony along with one exhibit?

A. Yes, I did.

Q. If I were to ask you the questions today that appear in your prefiled testimony would your answers be the same?

A. I have one correction. On page 9, line 6 I'm quoting from the agreement and the last sentence states "this section is interrelated to section 5.3.1," that reference should be 5.3.1.1. No other changes.

Q. So with that change, if I were to ask you the same questions would your answers be the same?

A. Yes, they would.

MR. SHORE: I would ask that Ms. Shiroishi's prefiled testimony be admitted.

ERAS EXHIBIT 1

IDENTIFIED

(REPORTER'S NOTE: The prefiled testimony of ELIZABETH SHIROISHI will be reproduced in the record at this point the same as if the questions had been orally asked and the answers orally given from the witness stand.)

FILED
DEC 18 2002
Clerk's Office
N.C. Utilities Commission

BELLSOUTH TELECOMMUNICATIONS, INC.

DIRECT TESTIMONY OF BETH SHIROISHI

BEFORE THE NORTH CAROLINA UTILITIES COMMISSION

DOCKET NO. P-55, Sub 1376

DECEMBER 18, 2002

Q. PLEASE STATE YOUR NAME, YOUR POSITION WITH BELLSOUTH TELECOMMUNICATIONS, INC. ("BELLSOUTH") AND YOUR BUSINESS ADDRESS.

A. My name is Elizabeth R. A. Shiroishi. I am employed by BellSouth as Assistant Director, Interconnection Services Marketing. My business address is 675 West Peachtree Street, Atlanta, Georgia 30375.

Q. PLEASE PROVIDE A BRIEF DESCRIPTION OF YOUR BACKGROUND AND EXPERIENCE.

A. I graduated from Agnes Scott College in Decatur, Georgia, in 1997, with a Bachelor of Arts Degree in Classical Languages and Literature. I began employment with BellSouth in 1998, in the Interconnection Services Pricing Organization as a pricing analyst. I then moved to a position in product management, and now work as Assistant Director, Interconnection Services Marketing. In this position, I am responsible both for negotiating and for overseeing the negotiations of Interconnection Agreements, as well as Local Interconnection issues.

Q. WHAT IS THE PURPOSE OF YOUR TESTIMONY?

A. My testimony establishes that BellSouth has applied the appropriate charges for reciprocal compensation in accordance with the definition of "Local Traffic" as set forth in the Interconnection Agreement between BellSouth and AT&T. I rebut the allegations to the contrary of AT&T as set forth in its Complaint and in the testimony of Jeffery A. King dated November 26, 2002. In addition, I explain that it was BellSouth's intent at the time it entered into the Agreement that calls that originated or terminated via switched access arrangements would not be included within the definition of "Local Traffic".

Q. PLEASE EXPLAIN THE DEFINITION OF "LOCAL TRAFFIC" AS IT IS SET FORTH IN THE INTERCONNECTION AGREEMENT.

A. Section 5.3.1.1 of Attachment 3 of the Interconnection Agreement dated July 19, 2001, defines Local Traffic as follows:

> The Parties agree to apply a "LATAwide" local concept to this Attachment 3, meaning that traffic that has traditionally been treated as intraLATA toll traffic will now be treated as local for intercarrier compensation purposes, **except for those calls that are originated or terminated through switched access arrangements** as established by the State Commission or FCC. (emphasis added)

Pursuant to this plain and unambiguous language, the Parties agreed to consider IntraLATA toll traffic as "Local Traffic" unless such traffic ***"originated or terminated through switched access arrangements as established by the State***

1 *Commission or FCC."* The exclusion is specifically targeted at intraLATA
2 traffic.
3
4 Q. HAS BELLSOUTH BREACHED THE INTERCONNECTION AGREEMENTS
5 AS ALLEGED BY AT&T AND AS MR. KING CLAIMS IN HIS TESTIMONY
6 (PAGE 5)?
7
8 A. No. Mr. King is incorrect in his allegation that "all calls transported and
9 terminated within a "LATA" ("LATAwide Traffic"), would be subject to the local
10 reciprocal compensation rates set forth in the Second Interconnection
11 Agreement." As the contract language quoted above says, if an intraLATA call
12 originates or terminates through switched access arrangements, then that call is
13 excluded from the definition of Local Traffic. Such a call would be governed by
14 BellSouth's switched access tariffs and would be subject to the appropriate
15 switched access rates. BellSouth has not breached the Interconnection Agreement
16 by charging AT&T switched access rather than reciprocal compensation rates for
17 intraLATA calls "originated or terminated through switched access
18 arrangements."
19
20 Q. WERE YOU INVOLVED IN THE NEGOTIATION OF THE CONTRACT
21 LANGUAGE AT ISSUE IN THIS PROCEEDING?
22
23 A. Yes. I was very involved in the negotiation of this language with the AT&T
24 negotiation team.
25

1 Q. WAS MR. KING A PART OF THE NEGOTIATIONS?

2

3 A. No. He was not involved in any of the negotiations regarding this contract
4 language. His involvement began after the contract was signed and the dispute
5 arose regarding this language.

6

7 Q. WAS THERE DISCUSSION AND NEGOTIATION REGARDING THE
8 DEFINITION OF LOCAL TRAFFIC?

9

10 A. Yes. AT&T and BellSouth started the negotiations of the Second Interconnection
11 Agreement using a definition of local traffic that was similar to the definition in
12 the First Interconnection Agreement. During the course of negotiations,
13 BellSouth offered to AT&T a definition that it had used with other carriers. This
14 new definition expanded what was considered local within the LATA, but still
15 excluded minutes that traversed switched access arrangements that the carrier had
16 purchased from BellSouth. After discussion about the meaning of the definition
17 and the exclusion, including specific discussion about the fact that the language
18 excluded from the definition of Local Traffic calls that originated or terminated
19 through switched access arrangements, AT&T responded that it wanted to avail
20 itself of this new LATA wide local traffic definition with the exclusion for traffic
21 that originated or terminated through switched access arrangements, but proposed
22 a slight language change. The minor modification (discussed below) did not alter
23 the fact that traffic that traversed switched access arrangements was excluded
24 from the definition of Local Traffic. The parties agreed upon the language and
25 incorporated it into the Agreement.

1

2 Q. PLEASE DISCUSS THE CHANGE IN LANGUAGE THAT THE PARTIES
3 NEGOTIATED.
4
5 A. BellSouth originally proposed that the exclusion language read "except for those
6 calls that are originated or terminated through switched access arrangements as
7 established by the ruling regulatory body." After discussion around what was
8 meant by "the ruling regulatory body," the Parties modified the words to read
9 "except for those calls that are originated or terminated through switched access
10 arrangements as established by the State Commission or FCC." In the course of
11 these discussions, the Parties discussed the fact that this reference was to the
12 switched access arrangements that are offered for purchase through each Party's
13 switched access tariffs, which are approved by the State Commission (for
14 intrastate switched access) or the FCC (for interstate switched access).
15
16 Q. WAS IT THE INTENT OF THE PARTIES TO INCLUDE AS LOCAL
17 TRAFFIC MINUTES THAT ORIGINATED OR TERMINATED THROUGH
18 SWITHCED ACCESS ARRANGEMENTS?
19
20 A. Absolutely not. The exclusion was specifically written in order to exclude from
21 the definition of local traffic calls that are considered switched access under tariff.
22 As stated above, we had extensive discussion about the exclusion of traffic that
23 originated or terminated through switched access arrangements. In the course of
24 those discussions, we drew diagrams on the whiteboard and specifically discussed
25 the calls that traversed switched access arrangements and the fact that they would

be expressly excluded from the definition of Local Traffic. I was very surprised when AT&T informed BellSouth after the parties began operating under the Agreement of AT&T's position on the definition of local traffic, since we had had specific discussions about the exclusion.

Q. DOES BELLSOUTH HAVE THIS SAME DEFINITION OF LOCAL TRAFFIC IN INTERCONNECTION AGREEMENTS WITH OTHER CLPS?

A. Yes. BellSouth has multiple interconnection agreements with CLPs that contain the LATA wide definition of local traffic and corresponding exclusion for switched access arrangements.

Q. HAS ANY OTHER CLP TAKEN THE POSITION THAT AT&T IS TAKING IN THIS CASE REGARDING ITS INTERPRETATION OF THIS LANGUAGE?

A. No.

Q. DOES THE EXCLUSION IN THE DEFINITION OF LOCAL TRAFFIC REFERENCE SWITCHED ACCESS TRAFFIC AS DEFINED IN SECTION 5.3.3 OF THE INTERCONNECTION AGREEMENT AS MR. KING CLAIMS ON PAGE 8?

A. No. Mr. King incorrectly states that the exclusion in the local traffic definition is of Switched Access Traffic as defined in Section 5.3.3 of the Interconnection

1 Agreement. If that were true, the exclusion would state "Switched Access Traffic
2 as defined in Section 5.3.3." Instead, it specifically states that the exclusion is for
3 calls that are "originated or terminated through switched access arrangements."
4 The term switched access arrangements is not the same as the term Switched
5 Access Traffic, and if the Parties intended for the exclusion to reference Section
6 5.3.3, the reference would have been included.
7
8 Further, Mr. King's theory is not logical. Under Mr. King's theory, the definition
9 of Switched Access Traffic does not include any intraLATA traffic. However, the
10 exclusion is specifically for a certain class of intraLATA traffic. Said another
11 way, AT&T's position is that all calls in the LATA are local. If that were correct
12 there would be no need for the exclusion. The language would simply state that
13 all calls in the LATA are local.
14
15 Q. DOES BELLSOUTH HAVE AN INTERCONNECTION AGREEMENT WITH
16 AT&T IN ANOTHER STATE THAT HAS A DEFINITION OF LOCAL
17 TRAFFIC WHICH INCLUDES ALL TRAFFIC THAT ORIGINATES AND
18 TERMINATES IN THE LATA?
19
20 A. Yes. In the agreement that governs the parties' relationship in Mississippi,
21 BellSouth and AT&T agreed that all calls in the LATA would be considered
22 local. Thus, the definition simply reads, "Local Traffic means any telephone call
23 that originates and terminates in the same LATA." It does not have an exclusion
24 for switched access calls.
25

Q. ON PAGE 11, MR. KING DISCUSSES THE FACT THAT SECTION 5.3.3 STATES THAT IT IS INTERRELATED TO SECTION 5.3.1. PLEASE EXPLAIN THE REASON THAT THIS STATEMENT WAS INCLUDED IN THE AGREEMENT.

A. The reference to the interrelationship between Section 5.3.1 and 5.3.3 is actually a result of language Mr. King omitted from his testimony. The entire Section 5.3.3 states:

> Switched Access Traffic is defined as telephone calls requiring local transmission or switching service for the purpose of the origination or termination of Intrastate InterLATA and Interstate InterLATA traffic. Switched Access Traffic includes, but is not limited to, the following types of traffic: Feature group A, Feature Group B, Feature Group D, toll free access (e.g. 800/877/888), 900 access, and their successors. Additionally, if BellSouth or AT&T is the other party's end user's presubscribed interexchange carrier or if an end user uses BellSouth or AT&T as an interexchange carrier on a 101XXXX basis, BellSouth or AT&T will charge the other party the appropriate tariff charges for originating switched access services. The Parties have been unable to agree as to whether Voice over Internet Protocol ("VOIP") transmissions which cross local calling area boundaries constitute Switched Access Traffic. Notwithstanding the foregoing, and without waiving any rights with respect to either Party's position as to the jurisdictional nature of VOIP,

> the Parties agree to abide by any effective and applicable FCC rules and orders regarding the nature of such traffic and the compensation payable by the Parties for such traffic, if any; provided however, that any VOIP transmission which originates in one LATA and terminates in another LATA (i.e, the end-to-end points of the call), shall not be compensated as Local Traffic. This Section is interrelated to Section 5.3.1.

The reference to the interrelationship was added as the Parties were negotiating mutually agreeable language to deal with Voice over Internet Protocol.

Q. DOES OTHER LANGUAGE IN ATTACHMENT 3 ADDRESS THE MIGRATION TO THIS NEW DEFINITION OF LOCAL TRAFFIC?

A. Yes. As stated earlier, the parties agreed that the definition of Local Traffic in the Second Interconnection Agreement was to be different from the definition of Local Traffic in the First Interconnection Agreement. Further, the definition in the Second Interconnection Agreement related to the type of arrangement, or trunk group, that the traffic originated over or terminated through. As such, the parties included a provision in the Interconnection Trunking and Routing section (Section 3) of Attachment 3 that addressed this conversion. Section 3.1 states:

> The Parties will convert all existing interconnection arrangements and trunks to the interconnection arrangements described in this Attachment in accordance with this following . . .

The Section then goes on to give technical specifications as well as process information about starting the conversion. Further, and of important note, are the trunking arrangements described in the interconnection agreement. Sections 3.3.1, 3.17.1, 3.18.1, 3.19.1, and 3.20.1 describe the trunking arrangements that are available via this interconnection agreement. The pages from these Sections are attached as exhibit ERAS-1. The descriptions of the trunking arrangements make clear that they are for local and intraLATA toll traffic, and the trunking arrangements are not the same as the switched access trunking arrangements set forth in BellSouth's tariffs. Further, there is no provision in the interconnection agreement allowing for the combination of switched access arrangements with the interconnection arrangements set forth in the interconnection agreement.

Q. ON PAGE 15, MR. KING STATES THAT THERE IS NOT ANY LANGUAGE IN THE INTERCONNECTION AGREEMENT PROVIDING FOR THE ENTITLEMENT TO CHARGE SWITCHED ACCESS RATES. IS THAT RELEVANT?

A. No. BellSouth's tariffs, which are approved by this Commission for intrastate access and by the FCC for interstate access, govern switched access arrangements purchased from them and the traffic flowing over such arrangements.

Q. ARE THE PROVISIONS IN THE INTERCONNECTION AGREEMENT ADDRESSING THE COMPENSATION OWED FOR TRAFFIC RECIPROCAL?

A. Yes. Section 5.3.1 of Attachment 3 of the Interconnection states:

> The Parties agree to apply a "LATAwide" local concept to this Attachment 3, meaning that traffic that has traditionally been treated as intraLATA toll traffic will now be treated as local for intercarrier compensation purposes, except for those calls that are originated or terminated through switched access arrangements as established by the State Commission or FCC.

This language is written reciprocally, and thus applies to each party. To the extent that BellSouth originated or terminated calls through switched access arrangements as defined in the tariff, such calls would be subject to switched access, and not reciprocal compensation, rates.

Q. DOES THAT CONCLUDE YOUR TESTIMONY?

A. Yes.

#473881

1 COMMISSIONER ERVIN: And subject to the ruling
2 I made earlier on the motion to strike, Ms. Shiroishi's
3 testimony is admitted into the record.
4 Q. (MR. SHORE) Ms. Shiroishi, have you prepared a
5 summary of your testimony?
6 A. Yes.
7 Q. Would you give that to the Commission, please?
8 A. Yes. Thank you. The issue in this case is really
9 very simple: What do the parties agree would be
10 considered local under the interconnection agreement
11 between BellSouth and AT&T dated July 19, 2001, which I
12 will refer to as the second interconnection agreement.
13 Whether a call is considered local or not determines
14 what rate is paid for the termination of that call. If
15 a call is local, the reciprocal compensation rates set
16 forth in the parties' second interconnection agreement
17 apply. For calls that are not within the agreed upon
18 definition of "local traffic," the rates set forth in
19 the parties' switched access tariffs apply.
20 To determine what the parties agreed, let's look
21 at the language in the second interconnection agreement
22 which we've heard a lot about today. Section 5.3.1.1 of
23 Attachment 3 to the second interconnection agreement
24 reads: "The parties agree to apply a "LATA-wide" local

1 concept to this Attachment 3, meaning that traffic that
2 has traditionally been treated as intraLATA toll traffic
3 will now be treated as local for intercarrier
4 compensation purposes, except for calls that -- we
5 discussed the exclusion language. We discussed the
6 phrase "switched access arrangements" as established by
7 the State Commission or FCC." And that such language
8 referenced switched access arrangements for purchase out
9 of either parties' tariff. In fact, we made a minor
10 modification to the language as a result of our
11 discussions. I made it very clear to AT&T's negotiators
12 including its lead negotiator, Mr. Peacock, that the
13 exclusion applied to calls that traversed switched
14 access arrangements. We even drew diagrams to make sure
15 I was clear.
16 I don't have time in my summary to address all of
17 the arguments AT&T has come up with to try to convince
18 you that the exclusion in section 5.3.1.1 doesn't mean
19 what it says, but let me address one: The argument that
20 switched access arrangements in section 5.3.1.1 means
21 quote "switched access traffic" as that term is defined
22 in section 5.3.3. The language in 5.3.3, which is
23 titled "Switched Access Traffic," was inserted as the
24 parties mutually -- sorry -- negotiated mutually

1 acceptable contract language to address Voice Over IP
2 Protocol (sic) transmissions. Prior to negotiating such
3 contract language addressing VOIP transmissions, there
4 was no definition of switched access traffic in this
5 contract. The issue of VOIP was raised through the
6 context of switched access traffic because that's where
7 the disagreement centered: Were VOIP transmissions
8 switched access or not? As you can see from the
9 language, the parties agreed to disagree on that issue.
10 However, they agreed that VOIP would not be compensated
11 as local. Since VOIP transmissions are not routed over
12 switched access arrangements traditionally, the language
13 just states that VOIP transmissions which originate and
14 terminate in different LATAs shall not be compensated as
15 local. This language was then interrelated back to
16 section 5.3.1.1. And this gets to Commissioner Kerr's
17 question earlier, since section 5.3.1.1 is where the
18 parties agreed that with the exception of calls that
19 originated or terminated over switched access
20 arrangements, calls within the LATA would be treated as
21 local.
22 Let me tell you for a minute why that
23 interrelationship was important. If the parties had
24 agreed for compensation purposes that local calls would

1 be anything that originated and terminated in the
2 traditional local calling area as opposed to the
3 exception of pro LATA-wide local with the switched
4 access, then the VOIP language would have needed to
5 state that VOIP transmissions which originate and
6 terminate in different local calling areas would not be
7 treated as local. The interrelationship language would
8 ensure that if another CLP requested to adopt VOIP
9 transmissions of the BellSouth/AT&T agreement, it would
10 also adopt the definition of local traffic. If not,
11 there could be an inconsistency between the adopting
12 carrier's definition of local traffic and its applicatio
13 in the VOIP transmission provisions.
14 I'm sure you're all aware of Section 252(i) which
15 allows carriers to adopt.
16 As you can tell from looking at the language, the
17 provisions dealing with VOIP are contained within
18 section 5.3.3, and the exclusion language of 5.3.1.1 was
19 not inserted to address VOIP as you've heard Mr. Peacock
20 testify. If the parties had intended to exclude from
21 the local the definition of VOIP or switched access
22 traffic as a defined term, then that's what the
23 agreement would state. Instead, the provision for local
24 traffic first states that the call must be intraLATA,

1 and then contains exclusion for anything that originates
2 or terminates over switched access arrangements as
3 established by the State Commission or FCC.
4 You heard much discussion from AT&T around many
5 other issues today, but that's just noise to confuse the
6 issue. Again, it's very simple: the second
7 interconnection agreement between the parties excludes
8 from local any call that is originated or terminated
9 over switched access arrangements. That exclusion was
10 included for no other reason than to do just what the
11 plain language says: exclude from local any intraLATA
12 call that is originated or terminated through switched
13 access arrangements. Thank you.
14 MR. SHORE: Ms. Shiroishi is available for
15 cross.
16 COMMISSIONER ERVIN: Ms. Cecil.
17 MS. CECIL: I'll try to adjust this microphone
18 so you can hear me.
19 COMMISSIONER ERVIN: Yours seems to be doing
20 worse than Mr. Shore's and Mr. Cauthen's for some
21 reason.
22 MS. CECIL: We'll try this. It might be
23 better.
24 COMMISSIONER ERVIN: It certainly seems

1 better. Ms. Cecil, like I said, it's our equipment,
2 it's not you.
3 MS. CECIL: Okay.
4 COMMISSIONER ERVIN: Mr. Cauthen, we might let
5 you have your mike back if you behave.
6 CROSS-EXAMINATION BY MS. CECIL:
7 Q. Ms. Shiroishi, I'm going to be asking you about a
8 lot of documents today so I'd like to get started by
9 finding out what documents you have with you as you sit
10 there in the witness chair today.
11 A. I have the testimony filed by both parties,
12 although I do not have all of Mr. Peacock's exhibits. I
13 have the complaint filed by AT&T. I have the BellSouth
14 switched access tariff E6 that was passed out earlier.
15 And I also have my deposition.
16 Q. Okay. We're going to be asking you about
17 Mr. Peacock's Exhibit Number 6 so I'm going to ask that
18 a copy of Peacock Exhibit Number 6 be made available
19 please. We'll get to that in a few minutes.
20 A. I might actually have that one. I don't have
21 number 2 because I had printer problems. Number 6, the
22 reference of language. Yes, I do have that.
23 Q. Good. Okay. Now what did you do to prepare for
24 your testimony today, testifying today?

1 A. Well, in the course of this proceeding, I
2 obviously prepared discovery and interrogatory
3 responses, reviewed the notes from the meetings that we
4 have, and the redlined e-mails that we produced in
5 discovery. I've gone back through BellSouth's switched
6 access tariffs as well as the language in the contract.
7 Q. How recently did you read your deposition
8 transcript?
9 A. A few days ago.
10 Q. Now, unlike Mr. Peacock and Ms. Stevens, this is
11 not the first time that you've testified in a regulatory
12 proceeding, isn't that correct?
13 A. No. This is the first time I've testified in
14 North Carolina.
15 Q. But you've testified before in various regulatory
16 proceedings in Georgia and Florida and now in North
17 Carolina?
18 A. Correct.
19 Q. Tell me about your previous testifying experiences
20 in Florida in particular?
21 A. In Florida, I have testified about issues dealing
22 with reciprocal compensation in some complaint cases
23 against BellSouth regarding ISP-bound traffic prior to
24 the ISP Order on Remand. And in the generic docket

1 there, again, dealing with reciprocal compensation
2 issues and what should the definition of local calling
3 area be.
4 Q. Now, with respect to the proceeding in Florida
5 dealing with compensation for ISP-bound traffic, what
6 position did BellSouth take in that proceeding?
7 A. Which one specifically?
8 Q. The treatment of ISP-bound traffic.
9 A. The generic docket?
10 Q. The generic docket.
11 A. BellSouth's position is that ISP-bound traffic is
12 interstate in nature and not subject to reciprocal
13 compensation.
14 Q. And you have participated in that same docket
15 regarding the definition of local traffic, is that not
16 correct?
17 A. Yes, in a different phase.
18 Q. And what was your position in the Florida
19 proceeding regarding the definition of local traffic?
20 A. Our position there was that the parties should --
21 well, let me give a little reference to that docket.
22 That was a generic docket to establish if parties could
23 not agree upon a default -- or definition of what local
24 traffic should be or local calling area, what should the

default be. In that docket, most parties agreed that the parties have been able to mutually negotiate that so that was kind of BellSouth's first position is that the parties -- there's really no need for a default. The parties have traditionally been able to negotiate that. However, if a default was needed, then it should -- the definition should be determined by the local calling area of the originating party. Very similar in nature to some of the earlier interconnection agreements we had.

Q. And with respect to the treatment of ISP-bound traffic, BellSouth was taking positions regarding that particular traffic, not only in State Commissions in your territory but also at the FCC, is that not correct?

A. Yes, we participated in proceedings at the FCC.

Q. And why were you participating in proceedings at the State Commission as well as at the FCC at the same time relative to ISP traffic?

A. Prior to the April 27, 2001 ISP Order on Remand, that issue was teed up in all forums because the FCC again -- well, they had made one ruling which was vacated so the issue was opened up and being discussed in both forums as to what the appropriate compensation, if any, was for ISP-bound traffic.

1 Q. And with respect to Voice Over Internet Protocol,
2 that was also an issue that's been discussed in Florida
3 as well, correct?
4 A. Yes. That issue has been discussed.
5 Q. And it's an issue that this Commission has also
6 arbitrated, correct?
7 A. Yes, it is.
8 Q. Has BellSouth filed any pleadings at the FCC
9 dealing with Voice Over Internet Protocol?
10 A. I am not certain off the top of my head about
11 that. They're -- in the context of intercarrier or
12 reciprocal compensation type contexts there may have
13 been phrases to, or excuse me, comments about any type
14 access or jurisdiction but I don't know that there was
15 specifically an open docket about Voice Over IP.
16 Q. Well, with respect to ISP traffic itself, would
17 you agree by virtue of what you were doing at the FCC
18 and what you were doing at the State Commissions that it
19 was confused as to sort of what kind of traffic that was
20 going to turn out to be; whether it was intrastate,
21 interstate; wouldn't you agree with me on that?
22 A. For ISP-bound traffic?
23 Q. Yes.
24 A. That was an open issue in the industry until the

1 ISP Order on Remand.
2 Q. Fair enough. Fair enough. All right. Let's get
3 some background information before we talk about the
4 contract provisions specifically. How old are you?
5 A. Twenty-seven.
6 Q. And as I read your testimony, you graduated from
7 Agnes Scott College or University in Decater, Georgia in
8 1997, is that correct?
9 A. That is.
10 Q. And you have a BA in Classical Language and
11 Literature?
12 A. Correct.
13 Q. Now, you didn't join BellSouth your first year out
14 of undergraduate school, did you? You were a high
15 school teacher for a year, were you not?
16 A. I was.
17 Q. Okay. Then you joined BellSouth in 1998?
18 A. Yes.
19 Q. You were a pricing analyst?
20 A. Yes.
21 Q. And when you took that job you had absolutely no
22 telecommunications experience, did you?
23 A. Correct.
24 Q. And your main qualification that you told me about

1 in your deposition for obtaining that job was that you
2 knew about spread sheets, Excel work sheets, but that
3 you had no specific training in communications?
4 A. In telecommunications, correct.
5 Q. And you stayed at that job with BellSouth for one
6 year until 1999?
7 A. Yes.
8 Q. And then you became a collocation product manager.
9 In fact, you were promoted at that time, were you not?
10 A. Yes, I was.
11 Q. And you reported to Bernard Shell (spelling
12 uncertain)?
13 A. Yes.
14 Q. Mr. Shell's testified I believe before this
15 Commission, has he not?
16 A. I'm not certain.
17 Q. Okay. And isn't it true, Ms. Shiroishi, that when
18 you went into that collocation manager position that
19 your experience as a pricing analyst did not directly
20 relate to that new collocation manager position?
21 A. Again, I had experience working with that product
22 in my former role as pricing analyst doing some work
23 around pricing, but that's the extent.
24 Q. Well, when you were that collocation manager you

1 were not familiar with telecommunication networks in any
2 detail, were you, as we discussed in your deposition?
3 A. Well, actually, I talked about in my deposition,
4 as the pricing analyst role I was responsible for doing
5 research on what type of configurations were used and
6 how they were priced by BellSouth as well as by other
7 ILECs in the industry. And this related to our
8 wholesale offerings in our E6 tariff and E7 tariff
9 special access. So I did have some familiarity with the
10 network architecture in what we call quote, typical
11 configurations.
12 Q. Do you remember what you told me in your
13 deposition about your knowledge of telecommunications
14 networks when you became a collocation manager?
15 A. Yeah, would you like to point me to a cite?
16 Q. Do you remember? I was just asking do you
17 remember.
18 A. I remember talking about what we basically just
19 talked about here.
20 Q. So you're taking the position today that you had
21 knowledge of networks when you went into that
22 collocation product manager position?
23 A. Knowledge as the result of the pricing analyst,
24 nothing specific to collocation.

1 Q. And you stayed in that collocation manager role
2 for only six months, isn't that correct?
3 A. Correct.
4 Q. And you moved from that position and you've been
5 at BellSouth at that point in time about a year and a
6 half, isn't that correct?
7 A. Correct.
8 Q. One year as a pricing analyst and six months as a
9 collocation manager. And you had already been promoted
10 once, isn't that correct?
11 A. Twice actually at that point.
12 Q. So you were promoted twice at that time?
13 A. I was promoted once while I was pricing analyst?
14 Q. Okay. We didn't get that in your deposition. I'm
15 sorry. Now after your collocation product manager
16 position you moved to become an interconnection
17 agreement negotiator, isn't that correct?
18 A. That is.
19 Q. So you had been out of undergraduate school a
20 couple of years, you'd been at BellSouth a year and a
21 half and you became an interconnection negotiator,
22 right?
23 A. Correct.
24 Q. And as you told me in your deposition, you moved

1 to that interconnection negotiation position for "career
2 purposes." Do you remember saying that?
3 A. Yes.
4 Q. Now, I neglected to ask you in your deposition
5 what you mean by "career purposes." Could you tell me
6 today?
7 A. Just to gain more knowledge of BellSouth's
8 wholesale side and all of the different aspects there
9 are of that within our interconnection services
10 department obviously we have various roles and that was
11 to gain more exposure to those different roles.
12 Q. How about to also get promoted again?
13 A. The move to interconnection negotiations was not a
14 promotion.
15 Q. No, but career pathing -- you were interested in
16 getting promoted beyond where you were at the time?
17 A. That wasn't the specific reason I moved. I mean,
18 I was interested in taking on additional or new
19 responsibility.
20 Q. All right. Well, let's stop there. At the time
21 that you moved to that job as an interconnection
22 negotiator for career purposes, how many more times did
23 you get promoted from that time until today?
24 A. I was promoted -- will you ask me again?

1 Q. When you were the interconnection negotiator, you
2 said you had been promoted twice at that point in time?
3 A. Uh huh.
4 Q. How many more times have you been promoted since
5 you had that position?
6 A. Twice and then I actually have received another
7 promotion that will be effective February 1st. So that
8 doesn't -- hasn't actually gone into effect yet.
9 Q. So you've been promoted three times since you were
10 an interconnection negotiator?
11 A. As of February 1st, yes.
12 Q. As of -- now, what's going to be your new title as
13 of February 1st?
14 A. Director.
15 Q. And that will be in the equivalent parlance of the
16 Bell system a fifth level position?
17 A. Yeah. That's a hard thing to equate outside of
18 BellSouth.
19 Q. Isn't it one level short of vice president?
20 A. No, we do have senior director positions at
21 BellSouth.
22 Q. It's getting closer though, isn't it?
23 A. Yes.
24 Q. All right. Now, at the time you became the

1 interconnection negotiator you were between the first
2 and second levels of management, correct?
3 A. Correct.
4 Q. And you stayed in that interconnection negotiator
5 position about a year, until October of 2000, correct.
6 A. Correct.
7 Q. And as you indicated while you were there you were
8 promoted again, right?
9 A. Right.
10 Q. While you were in that position you were promoted
11 again. And then in October of 2000, after being a
12 negotiator for one year, you took on larger CLPs and you
13 had greater number of contracts to manage. That's what
14 you told me in your deposition, isn't that correct?
15 A. Correct.
16 Q. Now, before October of 2000 which were the CLECs
17 that you were managing those contracts from an
18 interconnection negotiation perspective?
19 A. I would have to go back and review my files. I
20 had 75 accounts that were mine.
21 Q. Well, I'd like to know some examples if you can
22 remember. This again, before October of 2000.
23 A. I really don't recall any specific --
24 Q. (Interposing) You can't name one for the

1 Commission?
2 A. ComSouth (spelling uncertain) was one of my CLECs.
3 I don't know if they operate in North Carolina; Smoke
4 Signal (spelling uncertain). Those are two that come to
5 the top of my head because of their ads that run, but I
6 don't recall any others.
7 Q. Could you describe for me the types of
8 interconnection negotiations you had with Smoke Signal?
9 A. Yeah, they're predominately a resale company, but
10 we did have an interconnection agreement with them.
11 Q. Did they adopt another person -- another company's
12 interconnection agreement?
13 A. No. I believe they actually had their own.
14 Q. So you negotiated an interconnection agreement
15 with them?
16 A. To the extent that they proposed changes and we
17 were -- yes.
18 Q. So did they adopt, for the most part, the standard
19 terms and conditions that you proposed?
20 A. I would have to go back and look again.
21 Q. You don't remember?
22 A. No.
23 Q. What about ComSouth? Did you have an
24 interconnection negotiation agreement with them or did

1 they opt into another agreement?
2 A. Again, I don't recall the specifics.
3 Q. All right. Well, let's talk about after October
4 of 2000, for which CLECs, or CLPs here in North
5 Carolina, contracts did you have responsibility at that
6 time?
7 A. At that point I had Birch Telecom. Again, at that
8 point I had moved to larger contracts so I didn't have
9 as many in volume but I think I had about 50 contracts.
10 I didn't review my prior contract assignment list or my
11 contract assignment list prior to coming here. I didn't
12 know that was going to be part of this. But Birch
13 Telecom was one of my customers along with several
14 others. But at that point I was predominately doing
15 interconnection agreements.
16 Q. Now, did Birch adopt another party's
17 interconnection agreement or did you have an
18 interconnection negotiation arbitration with them?
19 A. No, they did negotiate very substantially, but we
20 did not arbitrate.
21 Q. So you came to an agreement. Now, with respect to
22 all the CLECs or CLPs that you had worked with -- by the
23 time you got involved in the AT&T negotiation was AT&T
24 by far the largest company that you had been dealing

1 with from a CLEC perspective?
2 A. No. I don't know that that would be accurate.
3 Let me back up a bit. At the point we were talking
4 earlier, I was actually an interconnection negotiator
5 responsible for the entire provisions and coordinating
6 responses with BellSouth. In October of 2000 is when I
7 took on the responsibilities of local interconnection
8 subject matter negotiator. So at that point I started
9 handling negotiations for all contracts dealings with
10 local interconnection.
11 Q. What was the largest CLEC you had dealt with
12 before you dealt with AT&T?
13 A. Probably Sprint.
14 Q. Okay. And had you been through any arbitrations
15 with Sprint?
16 A. Yes. Sprint did file for arbitration.
17 Q. In which state?
18 A. I don't recall off the top of my head.
19 Q. You don't recall?
20 A. No. I mean, the issues were reached and --
21 Q. (Interposing) Now -- I don't mean to interrupt
22 you. I'm sorry. Now, you testified in your deposition
23 that beginning in mid-2000 when you were a contract
24 negotiator you then started managing or supervising

1 other contract negotiators. Do you remember that?
2 A. Yes.
3 Q. And I believe you told me in your deposition that
4 you stayed in this supervisory position managing other
5 contract negotiators until March of 2001 when you
6 assumed even greater responsibility as a subject matter
7 expert in negotiations. Do you remember that?
8 A. Yes.
9 Q. What do you view a subject matter expert in
10 negotiations to do?
11 A. At that point you are responsible for the final
12 language. You are the person who, if you need to go to
13 other people you can, but typically is the person for
14 BellSouth who comes to the table to speak about a
15 specific issue; not just the document as a whole.
16 Q. And at the time that you were the supervisory --
17 in a supervisory position with other contract
18 negotiators, as I can calculate from your deposition,
19 you had been with BellSouth about three years?
20 A. Correct.
21 Q. So -- and it was in this May 2001 time frame that
22 you first became involved in the North Carolina
23 negotiations?
24 A. For AT&T?

1 Q. Uh huh.
2 A. Correct. A little earlier perhaps but around that
3 time frame.
4 Q. And when you came on the scene relative to the
5 North Carolina AT&T negotiations, the parties had
6 already been negotiating for several months, had they
7 not?
8 A. Actually, yes, a year almost.
9 Q. All right. Now, I want to make sure I get this
10 date. So it was May of 2001 that you came on the scene
11 in North Carolina for the negotiations, isn't that
12 correct?
13 A. Again, it might have been a little earlier than
14 that.
15 Q. Right. And isn't that the date that BellSouth
16 proposed this new definition of local traffic. Didn't I
17 hear commentary that that was in May of 2000 as well?
18 A. Right. The end of May. I think it was around May
19 22nd that that language was proposed.
20 Q. Okay. Now, I also believe that you described your
21 previous position -- I guess your current position,
22 assistant director, your promotion is not going to be
23 effective until February -- I think you told me that
24 you've now got responsibility for all CLEC negotiations

1 that BellSouth has as well as all disputes and all
2 complaints that BellSouth has?
3 (THE COURT REPORTER REQUESTS MS. CECIL TO
4 REPEAT QUESTION DUE TO AN INTERRUPTION IN THE COURT
5 ROOM.)
6 Q. Now I believe you told me in your deposition that
7 your current position as assistant director of
8 interconnection, you've got responsibility for all CLEC
9 contracts plus all disputes or complaints that come out
10 of those contracts. Isn't that correct?
11 A. I'm not sure that I said all disputes or
12 complaints. There are certain -- again, where the
13 dispute lies kind of dictates who at BellSouth handles
14 that. Obviously, we have a billing department that gets
15 involved in certain disputes in other departments. But
16 part of my responsibility is around disputes revolving
17 contract language and interpretation.
18 Q. Okay. Just to put your differing jobs and
19 promotions in perspective: Are you aware of anybody
20 else at BellSouth who has ever been promoted as many
21 times as you've been promoted in such a short period of
22 time?
23 A. I'm sure that there are. I don't -- I haven't
24 actually ever thought about that question, but I'm sure

1 that there are people who have.
2 Q. Now with your recent promotion, are you going to
3 be Jerry Hendricks' peer?
4 A. No.
5 Q. Who are you going to report to in the new
6 position?
7 A. Jerry Hendricks.
8 Q. I want to ask you about your supervisory positions
9 relative to contract negotiators. In the context of
10 those responsibilities what do you advise your contract
11 negotiators about in terms of taking notes relative to
12 interconnection negotiations with CLECs?
13 A. We have -- different people have different styles
14 of doing that but basically they do take notes during
15 the meetings and also maintain the red lines that we
16 talked about earlier that go back and forth between the
17 companies. Also, they're responsible for coordinating
18 internal responses from BellSouth subject matter
19 experts. Obviously, if every one at BellSouth who had
20 to get involved came to the table we'd have a very large
21 negotiation session so they are responsible for
22 coordinating those internal responses.
23 Q. So you let everybody -- all these contract
24 negotiators, as you put it, do their own thing with

1 their own style?
2 A. No. We do have guidelines how we document and
3 where we keep those files. Typically -- I don't know
4 exactly what you're aiming for, but typically after a
5 contract is signed we do not keep those documents unless
6 as case may be we have a lawsuit requiring that or
7 something like that. But after a contract is signed, we
8 move to the first files or permanent files these signed
9 documents, any correspondence, but we don't keep all of
10 the notes because at that time you have a signed
11 contract. There are times when things are kept but
12 that's not part of our records retention requirement.
13 People may have kept notes but it's not required.
14 Q. What's the purpose of making notes if you're going
15 to destroy them right after the interconnection
16 agreement is signed?
17 A. Well, during the negotiations it's important to
18 have a track of whose action items are outstanding and
19 where you need to go to get different things. After an
20 agreement is signed, typically, the hope is that that
21 isn't an issue any longer. The document is complete.
22 Q. All right. I think you said that you would not
23 destroy the notes if there was a lawsuit pending, is
24 that correct?

1 A. Correct. If we have any records retention
2 requirement pursuant to a lawsuit.
3 Q. Now, obviously there were some notes that were
4 destroyed in the context of this negotiation, were there
5 not?
6 A. I don't know about destroyed. There may be notes
7 that did -- I don't know what that connotation means.
8 There were probably notes that existed at one point that
9 we don't have now that after the negotiations were
10 finalized there was no need to keep.
11 Q. Well you know that I asked, or AT&T asked, in
12 discovery for all of your notes. Do you remember that?
13 A. Yes.
14 Q. How many pages of notes did you provide us?
15 A. I don't know the page number. We provided all of
16 the red lines that went back and forth that were kept.
17 Everything that we've had from the time that -- from the
18 time that -- you know, anything that we've had actually
19 from that time period negotiations.
20 Q. Well red-lined contracts and notes are two
21 different things, are they not?
22 A. I guess that depends on how you would define it I
23 guess.
24 Q. I think you said earlier that you keep red-lined

1 versions of the contracts and you destroy the notes?
2 A. No. We actually don't typically keep -- our
3 records retention document or policy after a contract is
4 signed, again, unless there is some outstanding lawsuit
5 that we would need to keep documents, is to keep the
6 final version of the contract, any official
7 correspondence that went back and forth, but not all the
8 versions of red lines. I'm sure you can appreciate that
9 we negotiate with about 450 CLECs in the nine-state
10 region. If we kept every red-lined version we wouldn't
11 have enough file cabinet space.
12 Q. Well, in our discovery request, why then did we
13 get red-lined versions but we only got one set of notes,
14 one page of notes?
15 A. Again, because potentially that negotiator did not
16 keep any notes after the fact.
17 Q. Okay. I'm going to have to get a chart.
18 Ms. Shiroishi, I'm going to have represent to you that
19 that appears to be the only set of notes that we
20 received in our discovery request.
21 COMMISSIONER ERVIN: Ms. Cecil, are we going
22 to mark this?
23 MS. CECIL: Yes, let's do that. Sorry.
24 COMMISSIONER ERVIN: Let's mark this as

1 AT&T --

2 MS. CECIL: (Interposing) AT&T Cross.

3 COMMISSIONER ERVIN: -- AT&T Shiroishi

4 Cross-Examination Exhibit 1.

5 MS. CECIL: Thank you.

6 AT&T SHIROISHI CROSS EXHIBIT 1

7 IDENTIFIED

8 Q. (MS. CECIL) Do you recognize the handwriting on

9 that document?

10 A. Yes.

11 Q. Whose handwriting is it?

12 A. Michael Willis.

13 Q. Do you supervise Michael Willis?

14 A. No, I do not.

15 Q. So, I'm curious, when we put forth a discovery

16 request did you supervise BellSouth's attempt to locate

17 documents in response to that discovery request?

18 A. Yes, I did.

19 Q. Do you look at what was produced to AT&T?

20 A. Yes. Again, I was responsible for coordinating

21 those documents.

22 Q. Are you aware of any other notes that we were

23 provided other than this particular set of pages?

24 A. Not handwritten notes, no.

1 Q. Now, you had indicated again that you would not
2 destroy the notes or other documents if there was a
3 lawsuit pending. Would you destroy notes or red-lined
4 versions if there was a dispute pending?
5 A. I don't know -- again, I think that would be on a
6 case-by-case basis on how we would handle that.
7 Probably we would retain all documents related to a
8 dispute once we knew of the dispute.
9 Q. When did you become aware that there was a dispute
10 between AT&T and BellSouth in this situation relative to
11 the definition of local traffic?
12 A. I believe that the time frame was around
13 September-October of 2001.
14 Q. And the contract had just been signed July 19,
15 2001, is that correct?
16 A. Correct.
17 Q. So you think if there was destroying of notes it
18 took place between that time frame?
19 A. Correct. And, again, the word "destroy" doesn't
20 mean -- you know, we just routinely would have purged
21 the file on that. But, yeah, that would typically
22 happen right after a contract is signed.
23 Q. And your rationale again for destroying those
24 things is what, space?

1 A. Yeah, just space. We don't have room in our
2 building or on our PCs to keep all documents related to
3 all 450 contracts that we negotiate.
4 Q. If you had contract negotiators who came to you
5 and said that they had notes but there was a dispute
6 pending what would you advise them to do?
7 A. Well, at that point, obviously, there would
8 probably be attorneys involved as well. That would
9 probably that's made from a legal standpoint more than a
10 business standpoint.
11 Q. Okay. Now, I guess -- when I took your deposition
12 I didn't ask you a lot about documents because you said
13 you were still looking for them and I respected that,
14 and we were going to talk about them subsequently. I
15 guess now is a good time for me to ask the question.
16 Did you make notes of your conversations with
17 Mr. Peacock?
18 A. Typically, during negotiations sessions I would
19 write on a red-lined version the changes we
20 negotiated -- not necessarily notes around those
21 discussions -- and then would turn around a red line
22 back to that company, or in this case AT&T the next day
23 or in the days following. So I did not keep extensive
24 notes of the discussions; just the changes that were

1 made and then produced that document back to the other
2 company for their review.
3 Q. What about an important issue like the definition
4 of local traffic. If the parties were discussing that,
5 as you say that they have discussed it, would notes be
6 taken on an issue like that?
7 A. Again, the notes that I keep in that capacity as
8 subject matter expert, and each negotiator who's also in
9 attendance might keep their own notes, but mine would be
10 more related to the action items that I had from that
11 call if I owed materials or a language back to a company
12 what my responsibilities were so that I could ensure to
13 do those and get those back to that company.
14 Q. So if you were negotiating an issue as we've
15 talked about local traffic and what this exception
16 means, would you advise your contract negotiators to
17 just use red-lined versions and not send back perhaps
18 e-mails saying here's what we talked about, here's what
19 we agreed to, do you agree?
20 A. The hope is that the language embodies what the
21 parties agreed to. There could be times when you're
22 having discussions around something that would be a
23 resulting note or summary like that but not necessarily
24 always in the course of business.

1 Q. Did you review the notes produced by Roberta
2 Stevens in this proceeding?
3 A. I have reviewed those very cursorily when we were
4 in your offices for the deposition. I have not reviewed
5 them in depth.
6 Q. Why not?
7 A. Again, we -- I went through and looked for
8 anything that looked like it related to local traffic or
9 the issues in this case.
10 Q. Well, if the notes were only cursorily reviewed by
11 you why did you ask for them?
12 A. Mr. Shore looked at them as well. I mean, both --
13 we both had an interest in looking at those.
14 Q. So you don't -- having looked at them do you have
15 an opinion about the quality and completeness of her
16 notes?
17 A. I'm not sure. If you want to ask me a specific
18 question --
19 Q. (Interposing) You were in the negotiations. She
20 took notes. When you looked at her notes did they
21 appear to be complete or incomplete?
22 A. Again, they appeared to outline perhaps action
23 items, open things, they did not have every issue that
24 was discussed by any means.

1 Q. Okay. Let's move to another topic. Let's talk
2 more specifically about the negotiations between the
3 parties in this particular situation. Now what exactly
4 was your role in the North Carolina negotiations when
5 you arrived on the scene in May of 2001?
6 A. Well, prior to North Carolina, the parties had --
7 were still dealing with some other states and finishing
8 that up. When we started talking about North Carolina,
9 my role again was as the attachment 3 subject matter
10 spokesperson for BellSouth to talk about those issues
11 and try to resolve any issues that the parties were
12 still negotiating.
13 Q. What issues?
14 A. At that point we were negotiating several things:
15 Point of interconnection was one of the arbitration
16 issues that BellSouth and AT&T negotiated and continued
17 to negotiate even after the arbitrations were filed and
18 the hearings were held; compensation for what's called
19 "trunks in facilities" in the industry with an issue
20 that we continue to negotiate; the definition of local
21 traffic obviously we continued to negotiate; the Voice
22 Over IP provisions that was in arbitration that the
23 parties continued to negotiate; and then there were
24 other, you know, of course, a negotiation for the

1 language changes that were made. But those issues were
2 large issues. Also, after the FCC's ISP Order on Remand
3 came out, the parties negotiated about that issue.
4 Q. So you were an expert in all of those issues? You
5 were a subject matter expert in all of those issues you
6 just mentioned?
7 A. Yes, for local interconnection.
8 Q. Are you a trunking expert?
9 A. No.
10 Q. In fact, you admitted to me in your deposition
11 that you don't know that much about trunks, right?
12 A. Well, I'm familiar with trunking and how it works.
13 But within BellSouth we do have other people that if the
14 negotiations called for a need for someone who is an
15 expert on something that they would be brought in.
16 Q. And you told me in your deposition that you relied
17 on other people at BellSouth to help you understand the
18 network, right?
19 A. I believe your question to me was in learning
20 about the network and things like that. But, yes, if a
21 question comes up that I don't know the answer to,
22 obviously yes, I go to someone else who is responsible
23 for that at BellSouth to find out the answer for the
24 CLEC.

1 Q. Okay. And did you not tell me in your deposition
2 that when you became involved in the North Carolina
3 negotiations that you were not familiar with AT&T's
4 network?
5 A. Correct. Yeah, we deal, obviously again, with 450
6 CLPs and we're not -- I don't know the network
7 architecture of each of them.
8 Q. Okay. Just a few more questions about what you
9 advise your interconnection negotiators to do. Would
10 you ever advise them to file testimony in a proceeding
11 that involves an issue in dispute and an interconnection
12 agreement without checking that interconnection
13 agreement to see if the term in dispute is defined.
14 A. That's a fairly specific question. I don't know
15 if someone came and asked me that specific question how
16 I would answer. That's not something that typically
17 comes up in the course of my job.
18 Q. Well, in your deposition, I asked you before you'd
19 filed any testimony in this proceeding if you had
20 checked the contract to see if there was a definition of
21 switched access arrangements. Do you remember you told
22 me no you had not checked the contract?
23 A. I believe I told you that I did not think there
24 was, but I hadn't done a word search on the entire

1 agreement.
2 Q. Okay. Now, at the time that you became involved
3 in the AT&T negotiations in May of 2001, did you ask for
4 a briefing from anybody at BellSouth what were hot
5 buttons or key issues to AT&T in these negotiations?
6 A. No. Obviously in picking up -- as this is a
7 transition -- as I was picking up this job, I talked
8 with the previous manager who had these responsibilities
9 and we talked about open issues and where things were.
10 But I did not ask for quote, hot issues or hot buttons.
11 Q. And who was that manager that you had the
12 transition discussions with?
13 A. Tim Watts (spelling uncertain) had the position
14 prior to me.
15 Q. Did you talk with him about the definition of
16 local traffic?
17 A. I don't specifically remember if we talked before
18 that or not. Again, that -- I don't recall.
19 Q. Did you review AT&T's arbitration petition?
20 A. I don't know if I did prior to us starting to
21 negotiate on it.
22 Q. And is this the way -- is this the kind of advice
23 you would give your contract negotiators to pick up in
24 the middle of a negotiation and not review a petition or

1 not ask for a briefing?
2 A. Again, where we started from was a document and
3 that's what I asked for input on. Again, the parties
4 have talked a lot about the red lines that go back and
5 forth. At the point in which I took over, obviously, I
6 obtained the latest red line, looked through what the
7 issues were, what was open, what wasn't, and that would
8 be where the discussion centered from.
9 Q. Uh huh. So at that point in time, when you came
10 on the scene, you'd know whether AT&T thought they had
11 agreed to a definition of local traffic with BellSouth,
12 didn't you?
13 A. Well, again, in looking at the document that was
14 not an arbitrated issue that had been filed previously
15 but we did continue to talk about that issue and then
16 BellSouth proposed the language in May of 2001.
17 Q. No. My question was: When you first came on the
18 scene, when you first got involved, you didn't know
19 whether local traffic was a significant issue, did you?
20 You hadn't reviewed the arbitration petition.
21 A. I was aware of the arbitration issues.
22 Q. And in the arbitration petition AT&T had not asked
23 to negotiate, I'm sorry, to arbitrate the definition of
24 local traffic, had it?

1 A. No, they had not.
2 Q. Now, in addition to working on the North Carolina
3 negotiations, you indicated in your deposition that you
4 also worked on the Mississippi negotiations, quote,
5 towards the end. Do you remember that?
6 A. Yes.
7 Q. And with respect to the Mississippi agreement, you
8 stated in your deposition that the definition of what
9 constituted local traffic had already been agreed to by
10 the time that you arrived on the scene. Do you remember
11 that?
12 A. Yes.
13 Q. I'd want to look at the Mississippi agreement.
14 Let me get a chart out.
15 COMMISSIONER ERVIN: Ms. Cecil, I don't see
16 any need to mark this since we've agreed to judicially
17 notice this document. Is that right?
18 MS. CECIL: That's correct. That's correct.
19 So this will be AT&T Cross Number 2.
20 COMMISSIONER ERVIN: Okay. If we want to mark
21 it that's fine.
22 MS. CECIL: That's great.
23 AT&T SHIROISHI CROSS EXHIBIT 2
24 IDENTIFIED

1 Q. (MS. CECIL) Can you see this, Ms. Shiroishi?
2 A. Yes.
3 Q. I'll represent to you that what we've shown on the
4 board here is the definition of local traffic which came
5 out of the Mississippi interconnection agreement. And I
6 think you agreed -- you indicated in your deposition
7 that this definition had already been agreed to by the
8 time you were involved in Mississippi, is that correct?
9 A. Again, the parties hadn't yet signed the
10 interconnection agreement. But, yeah, this issue, as I
11 believe Mr. Peacock talked about earlier, as you go
12 through you agree to issues as they come up and as they
13 are resolved. It's not -- obviously you can't wait
14 until the last minute and have one major session to do
15 every issue in an interconnection agreement. So, yeah,
16 the parties -- BellSouth had given its concurrence on
17 this language prior to my involvement.
18 Q. Okay. And in 6.1.1 it states: Local traffic
19 means any telephone call that originates and terminates
20 in the same LATA, correct?
21 A. Correct.
22 Q. Now, the date of the Mississippi agreement was
23 March 28, 2001. That was before the FCC's Order on
24 Remand regarding ISP traffic, correct?

1 A. It was before it was effective but I believe it
2 was released maybe in February.
3 Q. What did the Mississippi agreement say relative to
4 how the parties were going to compensate each other for
5 ISP traffic?
6 A. The parties agreed to compensate each other at the
7 rates listed in 6.1.2 for ISP-bound traffic.
8 Q. And that was very different than what was agreed
9 to in North Carolina, correct?
10 A. At what point agreed to in North Carolina?
11 Q. The July 19th agreement.
12 A. What was ultimately signed?
13 Q. Yes.
14 A. I'm not sure how you define different. I mean, in
15 the North Carolina agreement signed in July, the parties
16 also agreed to compensate each other at a single rate
17 for ISP and local traffic, and in the Mississippi
18 agreement.
19 Q. Well, in Mississippi, the parties basically agreed
20 before the FCC's Order on Remand became effective to
21 compensate ISP traffic as if it were local traffic at
22 local rates as you've said in your deposition.
23 A. It's the same rates as local traffic, yes.
24 Q. Same rates. And relevant to North Carolina, what

1 did the parties agree to?
2 A. In the July agreement?
3 Q. Yes.
4 A. To compensate each other at the same rate for ISP
5 and local traffic. Well, actually they put in place
6 holder language which said we would implement FCC's ISP
7 Order on Remand which is -- that's one of the
8 alternatives set forth in that.
9 Q. And during the North Carolina negotiations, did
10 not the parties also agree that if the FCC subsequently
11 changes their mind about ISP traffic, the parties will
12 agree and comply with whatever the FCC subsequently
13 says. Isn't that correct?
14 A. I would have to look at that language. I believe
15 that's correct.
16 Q. And in Mississippi there wasn't any sort of
17 exclusion. The parties agreed that they were going to
18 compensate ISP traffic during the term of that agreement
19 at local rates regardless of what the FCC said, isn't
20 that correct?
21 A. At the same set of rates, yes.
22 Q. Okay. All right. So in other words, the issue
23 about ISP traffic in the Mississippi agreement was
24 pretty much over? Wouldn't you agree with that?

1 A. For Mississippi, yes.
2 Q. And in North Carolina it wasn't over. You were
3 still negotiating it at the time you were talking about
4 a new definition of local traffic. And you'd also agree
5 that if the FCC changed its mind subsequently that that
6 agreement will be changed as well, correct?
7 A. Again, yeah, I would need to look at that
8 language. But, yes, that was an issue that the parties
9 were still negotiating.
10 Q. Okay. Now, what did you understand to be issues
11 that could be negotiated after AT&T had filed its
12 arbitration petition?
13 A. When I became involved in the negotiations?
14 Q. Yes.
15 A. I don't know that there were any rules around what
16 could or couldn't be offered and discussed. Obviously,
17 the parties had filed for arbitration to the extent that
18 an arbitration issue was pending and the Commission had
19 issued an order or would. The parties are bound by that
20 unless they mutually agree to something else. So that
21 was, I guess, one criteria. But either party could
22 propose language to deal with something for the other
23 party to review.
24 Q. Wouldn't you agree as a matter of just principle

1 that once an arbitration petition is filed, the parties
2 are not going to negotiate items, provisions that
3 they've already agreed to after the petition has been
4 filed?
5 A. Not necessarily. I've been involved in many
6 negotiations sessions. And one of the difficulties with
7 arbitration is that the process does take some time so
8 as that time evolves, the parties may decide, you know,
9 we didn't -- we agreed to this language but now we see
10 this out here that you've offered somebody else and we
11 think we would like to talk about that; that's not
12 uncommon at all. Given the time frame that we're
13 talking about here, I think the arbitration petition in
14 North Carolina was filed in early 2000, and we didn't
15 sign the agreement until July of 2001. So during that
16 time frame it's not uncommon for carriers, and I'm not
17 just speaking of AT&T, but for all carriers that we
18 negotiate with, to continue having discussion, again, to
19 the extent both parties agree. We are bound by the
20 arbitration issues that are filed and the Commission
21 orders unless the parties agree otherwise.
22 Q. Well now, having already received the definition
23 of LATA-wide as being local in the Mississippi
24 agreement, are you suggesting that AT&T would have

1 agreed to something less in North Carolina after the
2 arbitration petition was filed in North Carolina?
3 A. I can't speak to AT&T's intent. As Mr. Peacock
4 talked about earlier, the parties did agree to some
5 things in Mississippi that they didn't agree to do in
6 other states. The parties agreed, for purposes of not
7 wanting to arbitrate in that state, that we would do
8 some things there that we wouldn't agree to do in other
9 states. And so, again, I can't speak to AT&T's intent.
10 But for BellSouth, local traffic obviously was something
11 that we were willing to go with this language in
12 Mississippi, we weren't willing to do that in other
13 states.
14 Q. How do you know that?
15 A. Because BellSouth was not willing to stick with
16 the definition that you see here in Mississippi in other
17 states.
18 Q. Now, why did you agree to that definition in
19 Mississippi?
20 A. Again, I was not the person involved when that
21 decision was made and concurred in, but again, both
22 parties agreed to things and Mississippi agreed to
23 compromise on issues that they wouldn't in other states?
24 Q. Now, I asked you about this in your deposition and

1 you said, I was not involved in Mississippi when the
2 definition of local traffic was agreed to. Do you
3 remember that?
4 A. Uh huh.
5 Q. And I also asked you in discovery why the
6 Mississippi agreement was the Mississippi agreement. Do
7 you remember that?
8 A. Yes.
9 Q. Now what things did the parties agree to that made
10 Mississippi so different than North Carolina?
11 A. Well if we wanted to do a side-by-side comparison
12 of those agreements, we would see things there that were
13 agreed to compromise language that didn't appear as
14 arbitration issues, obviously, because we didn't
15 arbitrate. Off the top of my head, you know, we came up
16 with alternative solutions. I know that, for instance,
17 on Voice Over IP in Mississippi we basically just agreed
18 to language that said neither party is doing it at this
19 point in time so it's not an issue. We just agree under
20 this agreement not to do it. And if either party wanted
21 to start doing that we could request an amendment and
22 would handle it at that time.
23 Q. Let me stop you there because that's a good
24 example. Voice Over IP, you gave up your rights on that

1 issue in Mississippi by what you've just said. You were
2 wanting to have Voice Over IP treated as some type of
3 traffic, switched access traffic, correct?
4 A. But I haven't given up any rights if the party is
5 saying they're not going to do it. I mean, if I have a
6 company who's saying I'm not going to do this then it's
7 not an issue for me. And if the contract -- or
8 BellSouth I should say -- and if the contract says
9 you're got going to do it then, no, I haven't given up
10 any rights.
11 Q. So you're taking the position that AT&T agreed in
12 Mississippi not to transport any Voice Over IP traffic?
13 A. I don't have the language in front of me but if we
14 look at it basically -- I'm paraphrasing here -- it says
15 something like the parties agree that at this point in
16 time, and I don't know if it's mutual or if it just says
17 AT&T, but is not utilizing VOIP transmissions or it
18 might have said IP telephony transmissions in
19 Mississippi. And my recollection is that it says if at
20 any point they want to start doing it they'll request an
21 amendment and we'll negotiate it and handle it at that
22 point.
23 Q. So in Mississippi -- were there any other terms
24 that you felt were as valuable enough to balance out you

1 giving up a LATA-wide definition of local traffic?
2 A. Again, I wasn't involved in those negotiations so
3 I couldn't speak for the balance that you're asking for
4 there, but there were issues. Again, point of
5 interconnection was an issue that was very, obviously
6 important to both parties and was handled one way in
7 Mississippi that I guess AT&T was okay with in the other
8 states and so they arbitrated that issue.
9 COMMISSIONER ERVIN: Ms. Cecil, it's about
10 3:00 and I think we need to give the Court Reporter a
11 break. So let's take a 10 minute recess and reconvene
12 at 3:10 according to the clock on the back of the wall
13 there.
14
15 WHEREUPON, this hearing was recessed.
16
17
18
19
20
21
22
23
24

1 CERTIFICATE

2 The undersigned Court Reporter certifies that
3 this is the transcription of notes taken by her during
4 this proceeding and that the same is true, accurate and
5 correct.

6

7 Kim Mitchell
8 Court Reporter II
9 March 5, 2003

10
11
12
13
14
15
16
17
18
19
20
21
22
23
24

PLACE: Dobbs Building, Raleigh, North Carolina

DATE: Wednesday, January 22, 2003

DOCKET NO.: P-55, Sub 1376

TIME IN SESSION: 3:10 to 4:46 p.m.

BEFORE: Commissioner Sam J. Ervin, IV, Presiding
Commissioner Michael S. Wilkins
Commissioner James Y. Kerr, II
Commissioner Robert V. Owens, Jr.
Commissioner J. Richard Conder

IN THE MATTER OF:
BELLSOUTH TELECOMMUNICATIONS, INC. COMPLAINT OF AT&T, TELEPORT COMMUNICATIONS GROUP AND TCG SOUTH OF THE CAROLINAS FOR ENFORCEMENT OF INTERCONNECTION AGREEMENTS WITH BELLSOUTH TELECOMMUNICATIONS, INC.
Volume 3 of 3

A P P E A R A N C E S:

FOR BELLSOUTH TELECOMMUNICATIONS, INC.:

Edward L. Rankin, III
General Counsel - North Carolina
P.O. Box 30188
Charlotte, NC 28230

Andrew D. Shore, Attorney at Law
675 West Peachtree St. N.E.
Suite 4300
Atlanta, GA 30375

FOR AT&T of the SOUTHERN STATES, LLC:

Loretta A. Cecil, Attorney at Law
1201 West Peachtree St., Suite 3500
Atlanta, GA 30309

FOR THE USING AND CONSUMING PUBLIC:

Robin Cauthen, Staff Attorney
Public Staff - N.C. Utilities Commission
4326 Mail Service Center
Raleigh, North Carolina 27699-4326

1 I N D E X

2

	PAGE
ELIZABETH SHIROISHI	3
Cross Examination by Ms. Cecil (continued)	3
Cross Examination by Mr. Cauthen	45
Redirect Examination by Mr. Shore	50
Examination by Commissioner Kerr	52
Examination by Commissioner Wilkins	58
Examination by Commissioner Ervin	64
Redirect Examination by Mr. Shore	69

E X H I B I T S I D E N T I F I E D

	PAGE
AT&T Shiroishi Cross Examination Exhibit No. 3	30

E X H I B I T S A D M I T T E D

	PAGE
AT&T Shiroishi X-Examination Exs. Nos. 1, 2, and 3	69
BellSouth Shiroishi Direct Examination No. 1	70

COMMISSIONER ERVIN: All right. Let's come back to order, please.

I believe when we took our recess that we were with the cross examination of Ms. Shiroishi by Ms. Cecil.

COMMISSIONER KERR: Just point out that Mr. Hathcock (phonetic spelling) came up on the break to assure us he had been promoted at least that many times on his first three years.

MS. CECIL: That makes me feel better. Thank you, Commissioner.

COMMISSIONER ERVIN: I'm not sure it makes me feel better.

COMMISSIONER KERR: It was incoming mail to outcoming mail to big packages.

<u>CROSS EXAMINATION BY MS. CECIL (continued):</u>

Q. All right. Ms. Shiroishi --

COMMISSIONER ERVIN: I don't think I was ever promoted.

COMMISSIONER KERR: No offense taken by the rest of us.

Q. All right, I want to talk to you about your communications with AT&T about changing or the

1 definition of local traffic. And we discussed this at
2 length during your deposition. I want you to turn to
3 page 70 of your deposition, please.
4 MS. CECIL: Commissioners, would you like to
5 see a copy of the deposition? We have copies.
6 COMMISSIONER ERVIN: Well, I'm okay so far. I
7 don't know about any of my colleagues, but if you --
8 COMMISSIONER KERR: Not unless you all
9 disagree about what it says --
10 MS. CECIL: Okey-dokey.
11 COMMISSIONER KERR: -- I don't think I need to
12 see it.
13 COMMISSIONER ERVIN: Not concerned about the
14 degree of literacy in the room.
15 Q. All right. Ms. Shiroishi, I'd ask you the
16 question at line six there, after you were involved in
17 the negotiations, how did you communicate to AT&T that
18 it was BellSouth's intent that calls originated or
19 terminated via switched access arrangements would not be
20 included in the definition of local traffic.
21 Do you see that question?
22 A. Yes.
23 Q. And you basically said that after the arbitration
24 was filed, the parties continued to negotiate provisions

of the agreement.

Do you remember that?

A. Yes.

Q. And then in your answer, you asked to sort of stipulate out that what we were talking about was local traffic, not related to ISP.

Do you remember that?

A. Yes.

Q. Why would you have wanted to take out any discussion about what you had said to AT&T about ISP traffic?

A. Well, it wasn't that I wanted to take it out. But I believe the question you had asked me is around the negotiations of the language, up here to my left, and why, in the context of what we were negotiating and how we were negotiating that. And I was talking about the fact that we, again, proposed this definition in May of 2001. And at that point in time, obviously, the ISP issue had been resolved from a procedural standpoint, I guess, by the FCC. The parties were still negotiating separately how we were going to implement and do the compensation, but we began to also negotiate the definition of local traffic outside the scope of that ISP issue.

1 So it wasn't so much that I wanted to talk -- or
2 keep that outside of the issue, it's just that I was
3 referencing here our discussions around local traffic
4 not relating to the ISP issue.
5 Q. Okay. Well, with respect to BellSouth's response
6 to AT&T's arbitration petition, you were in the room I
7 believe earlier today when Mr. Shore asked Mr. Peacock
8 several questions about it. Do you remember that?
9 A. Yes.
10 Q. And Mr. Shore indicated that BellSouth had filed a
11 response to the petition, and had raised some objections
12 to the definition of local traffic. Do you remember
13 that?
14 A. Well, I believe that the discussion was just
15 around the fact that the language was different. Yes.
16 Q. Right. And then when Mr. Peacock was being
17 redirected, I asked him to read BellSouth's response as
18 to what was wrong with the definition of local traffic.
19 And do you remember that the issues BellSouth raised in
20 that response dealt with enhanced service providers and
21 ISP traffic? Do you remember that?
22 A. Correct. But the language above that, not dealing
23 with ISP, was still different from what AT&T filed.
24 Q. But in the BellSouth response, there wasn't

1 anything that related to any other language. It just
2 dealt with those issues that I discussed with
3 Mr. Peacock. Don't you remember that?
4 A. Right. Correct.
5 Q. So if there were other issues outstanding beyond
6 just ISP traffic or any other type of unusual traffic,
7 Voice over IP, why would those not have been included in
8 the BellSouth response?
9 A. I don't know. I think the important thing about
10 those documents is that just that it shows, obviously,
11 the parties hadn't agreed on a definition of local
12 traffic at that April 18 or April 2000 time frame. That
13 AT&T had filed one set of language, BellSouth had filed
14 another. And the point that had been raised, I think
15 when Mr. Shore was talking about it, was just because of
16 the fact that AT&T had stated that BellSouth had already
17 agreed to a LATAwide local definition, and Mr. Shore, I
18 think, was just trying to point out, well, let's look at
19 the documents; the documents that were filed by the
20 respective parties don't show that necessarily.
21 Q. Okay. Let's turn over to page 74 of your
22 deposition. I asked you a question: Who was present
23 during the discussions that you had about the exclusion
24 from AT&T.

1 And do you remember that you named Mr. Peacock and
2 Michael Karno.
3 Who's Michael Karno?
4 A. Michael Karno is counsel for AT&T. I believe -- I
5 don't know if he's internal or outside.
6 Q. And you said you didn't know if Roxanne Douglas
7 was present or not. Who is Roxanne Douglas?
8 A. Another attorney for AT&T.
9 Q. And Roberta Stevens was there, correct?
10 A. I said actually in my deposition I wasn't sure if
11 she was specifically there or not, but she was in most
12 of our meetings.
13 Q. And then I asked you the question in your
14 deposition: Who did most of the talking for BellSouth
15 during these discussions.
16 And your answer was --?
17 A. Myself.
18 Q. And I said: Why did you tell Mr. Peacock and
19 Michael Karno -- what did you tell Mr. Peacock and Karno
20 and others from AT&T.
21 What was your answer?
22 A. We discussed what the exclusion meant and the fact
23 that anything that originated or terminated through a
24 switched access arrangement would not be counted as

1 local.
2 Q. Okay. And then I asked you the question: Was
3 there discussion about the definition of switched access
4 arrangements.
5 And what was your answer?
6 A. I do not recall specifically around that issue.
7 There was discussion around what "as established by the
8 earlier language read to the ruling regulatory body"
9 meant. The language was modified to read "as
10 established by the State Commission or FCC." So the
11 discussion was around the fact that the FCC or State
12 Commission has jurisdiction over our tariffs, which is
13 how we offer switched access arrangements. So that
14 discussion was held.
15 Q. All right, wouldn't you agree that the
16 terminology, switched access arrangements, is really the
17 lynchpin in that exclusion language?
18 A. Yes.
19 Q. And you indicated in your deposition that you did
20 not recall specifically discussing that definition with
21 AT&T, isn't that correct?
22 A. Right, the definition.
23 Q. Let's go over to page 78 of the deposition.
24 I'm sorry, bottom of page 77. I asked you the

1 question: Other than the red lined version of the
2 agreements you just referred to, do you have any other
3 meeting notes or any other writings which would confirm
4 what you discussed and when you discussed it.
5 What was your answer?
6 A. I've not gone through every document, yet. I'm
7 still looking through those documents to see.
8 Q. Now, when did you then learn that these documents
9 or notes had been destroyed?
10 A. Well, in providing our responses to AT&T's
11 interrogatories and -- interrogatories and request for
12 production of documents, of course, I went through every
13 document, and we provided the responsive documents at
14 that point.
15 I believe this deposition -- what date was this.
16 On Friday. Monday. Sorry, Monday. Our responses were
17 due on -- or were provided on Wednesday. Tuesday and
18 Wednesday I finished compiling the responses, as well as
19 Monday night.
20 Q. So it was between the deposition and Wednesday --.
21 Your deposition on Monday afternoon, late, Wednesday you
22 produced, so Tuesday was when you determined that the
23 notes had been destroyed?
24 A. Again, Monday was a late night as was Tuesday. So

1 I worked Monday night and all day Tuesday on these
2 requests. And, yeah, at that point I went through all
3 the documents that we had, and we produced what was
4 responsive.
5 Q. All right. Let's now turn over to page 79. I
6 asked you the question at line four: Do you have an
7 e-mail or any other kind of writing that says here is
8 what I told Mr. Bill Peacock or anybody else at AT&T
9 about what this language means, "except for those calls
10 originated or terminated through switched access
11 arrangements as established by the State Commission or
12 FCC."
13 What was your answer?
14 A. As of the date of the real time communications,
15 not that I have found, but I haven't finished looking
16 through.
17 Q. Well, when you finished looking, what did you
18 find?
19 A. Not --. Nothing responsive or nothing specific to
20 what your question was there.
21 Q. All right. Let's look farther on down the page of
22 79, and I asked you about subsequent e-mails that went
23 back and forth between the companies putting forth each
24 party's position.

1 You see that at line 15?
2 A. Yes.
3 Q. And I asked the question: What e-mails are those.
4 And what was your answer?
5 A. There was an e-mail from Lea Cooper to Michael
6 Karno, and I believe one from Michael Karno to Lea
7 Cooper.
8 Q. And Michael Karno was, again, AT&T's attorney?
9 A. Yes.
10 Q. And Lea Cooper was BellSouth's attorney?
11 A. Yes.
12 Q. So after the contract was signed, there were
13 e-mails that BellSouth transmitted to AT&T establishing
14 what you believe the definition of local traffic was,
15 isn't that correct?
16 A. After we realized that we had a dispute, yes,
17 there are e-mails that go back and forth talking about
18 each party's position relative to that dispute.
19 Q. All right. Let's go to page 81 of your
20 deposition. I asked you about some of your testimony at
21 line three. And line 13 of your testimony state -- you
22 state: Such a call would be governed by BellSouth's
23 switched access tariffs and would be subject to the
24 appropriate switched access rates.

1 And I said: That line in your testimony, that is
2 your conclusion. That language is not found in the
3 North Carolina Interconnection Agreement anywhere.
4 What was your answer?
5 A. Correct.
6 Q. Let's talk about how AT&T benefitted from the new
7 definition of local traffic. Turn over to page 85 of
8 your deposition. See at the top of the page I asked
9 you: This new definition expanded what was considered
10 local within the LATA, but still excluded minutes that
11 traversed switched access arrangements that the carrier
12 had purchased from BellSouth.
13 That was your testimony. You remember --
14 A. Yes.
15 Q. -- our discussion about that?
16 And then I asked you the question: How did that
17 new definition expand what was considered local within
18 the LATA.
19 Would you read your answer?
20 A. Under the First Interconnection Agreement, in
21 order to be considered local the call had to be billed
22 by the originating party as a local call. Before under
23 this definition -- I'm reading as is -- offered in the
24 May time frame, the billing was not an issue. It was

1 around more the routing of the traffic. So things that,
2 for instance, AT&T may not have billed as local could
3 still potentially be considered local under this
4 definition.
5 Q. All right. So under the old interconnection
6 agreement, if it had been billed as local, it would have
7 been local if it had been within the LATA, correct?
8 A. Yes.
9 Q. What about across the state?
10 A. Now, I believe the first agreement says, and I'm
11 going off the top of my head, but basically anything
12 that originates and terminates in the LATA and is billed
13 by the originating party as a local call was the
14 definition of local traffic.
15 Q. Okay. Again, I'm trying to understand how this
16 benefitted AT&T, because under the old agreement, AT&T
17 had billed it as local within the LATA, it would have
18 been local compensation?
19 A. Right. In this definition that we offered in May,
20 and the parties subsequently agreed to, doesn't bound
21 anything around the billing of that traffic. It
22 basically says that if it originates and terminates in
23 the LATA, unless it traverses switched access
24 arrangements, it will be considered local.

1 Q. Okay. So under the old interconnection agreement,
2 you didn't really care how the traffic was obtained so
3 long as it was billed as local, is that correct?
4 A. Right. Under the first interconnection agreement,
5 the definition criteria were different.
6 Q. Okay. It had to be billed as local?
7 A. And within the LATA.
8 Q. In the new agreement, it doesn't have to be billed
9 as local. So, are you taking the position that AT&T
10 could bill a customer a toll call, but so long as it
11 doesn't go through a switched access arrangement, AT&T
12 would only pay reciprocal comp?
13 A. Within the LATA. I mean that's exactly what the
14 definition says. Any call that originates and
15 terminates in the LATA, unless it goes over switched
16 access arrangements, counts as local.
17 Q. All right. And then I also asked you a question
18 at the bottom of page 85: Do you know under the First
19 Interconnection Agreement where there was this
20 requirement that there would be billing in order to get
21 local compensation, whether AT&T -- I'm sorry, whether
22 BellSouth charged AT&T for terminated traffic at local
23 rates, which AT&T had not billed as local.
24 Do you remember us having that discussion?

A. Yes.
Q. What was your answer?
A. Can you point me to that line? I'm sorry.
Q. It's on page 86. Line two.
A. My answer was -- I think you had asked me if I knew that data. I said: Again, I don't know that. I'm not sure how to answer. That would be, I guess, a violation of the interconnection agreement.

The first interconnection agreement, actually, as -- this one, the fact -- the parties supply factors to one another. And so under the first interconnection agreement, AT&T would provide a factor to BellSouth to say here's what percent of my traffic is local, and that what's local is determined by the definition of local in the interconnection agreement.

So to the extent that AT&T supplied a factor to BellSouth that they're now saying was inconsistent with the interconnection agreement, I actually don't know. I haven't checked into that, and I don't have any data to know that other than what you've said.

Q. But if, in fact, AT&T under the old or first interconnection agreement was sending traffic to BellSouth, and you were terminating it at local rates, and AT&T was not actually billing it at local, AT&T

1 really didn't get anything out of this new definition,
2 did it?
3 MR. SHORE: If I may just interpose an
4 objection. Pardon me, Ms. Shiroishi, Ms. Cecil.
5 Ms. Cecil's asking her, I just want to be
6 clear this is a hypothetical question, there's no facts
7 in evidence in this case at all to support that. So
8 she's asking her hypothetically, I'm okay with that. If
9 she's suggesting that there's some evidence in this case
10 to that effect, that hasn't been the case. In other
11 words, AT&T hasn't put in any evidence to support that
12 hypothetical.
13 COMMISSIONER ERVIN: Overruled.
14 A. And, again, I guess my answer, hypothetically,
15 would be if that's the case then I'd have to go back and
16 look at the statute on the first interconnection
17 agreement. BellSouth would have requested an audit of
18 AT&T to say we believe you're providing incorrect
19 factors to us. The definition in your agreement states
20 that it must be billed as local. The factors you're
21 giving to us, if we had reason to believe, were
22 incorrect. And that's where the investigation would
23 start.
24 But the first interconnection agreement did state

1 that it had to be billed as local.
2 Q. And do you know, during the term of that first
3 interconnection agreement, if BellSouth ever audited
4 AT&T's PLU factor?
5 A. I do not know. I don't believe so.
6 Q. Okay. All right, you also filed in your testimony
7 of -- a line of Q's and A's regarding contracts that you
8 have with other competing local providers, and the fact
9 that they have the same definition of local traffic as
10 in 5.3.1.1. Is that correct?
11 A. Correct.
12 Q. We had a discussion during your deposition about
13 whether those other CLPs also had language regarding ISP
14 traffic, Voice over Internet, all the other terms and
15 conditions were the same. Do you remember that
16 discussion?
17 A. Yes.
18 Q. And you were not able to tell me that those CLPs
19 had all of the same terms and conditions as in the AT&T
20 agreement, isn't that correct?
21 A. Yes.
22 Q. And I asked you the question: Shouldn't the
23 Commission look at all the parts of the agreement, not
24 just an isolated definition of local traffic, to draw

1 any conclusions.
2 Do you remember me asking that question?
3 A. I don't remember that exact question.
4 Q. Let's look on page 95 and 96 to see what your
5 answer was.
6 A. Okay.
7 Q. I asked you the question at line 13 there: Is it
8 the case that the North Carolina Commission should look
9 to the AT&T/BellSouth Agreement in its entirety and
10 compare it to a CLEC agreement in its entirety to come
11 to the conclusion of whether or not the agreements are
12 similar or the same.
13 And after Mr. Shore injects his objection, at the
14 bottom of the page, what was your answer?
15 A. I start by saying: That is if I have an opinion.
16 That was in response to Mr. Shore's objection.
17 And my answer was: No, I think the point or the
18 disagreement revolving around this issue is is there
19 value in evaluating whether that same definition is
20 found in other agreements and how the parties have
21 handled that.
22 Again, I think the important thing about the other
23 CLPs that have that same language, maybe it shouldn't be
24 phrased as has anyone else taken AT&T's position, but so

1 much as has anybody else had a position that differed
2 from BellSouth. In the --. Obviously, BellSouth's
3 position is that the exclusion is what it is. Anything
4 that originates or terminates through a switched access
5 arrangement as established by the FCC or State
6 Commission. And as we talked about earlier, that
7 "established by the State Commission or FCC" is a
8 reference to the tariffs that we file that are approved
9 by this Commission, thus establishing how switched
10 access arrangements will be defined in the State of
11 North Carolina, for example, intrastate.
12 And, so, when you look at the other CLP agreements
13 that have that same language in 5.3.1, "except for those
14 calls that originate or terminate through switched
15 access arrangements," again, I think the important point
16 there is maybe not so much has anyone else taken AT&T's
17 position, but no one has differed from BellSouth's
18 position. And our position doesn't bound that to ISP
19 and Voice over IP as AT&T's position does.
20 Q. Okay. I think what I heard at the beginning of
21 your answer, and I don't want to cut it short, is that
22 you said the Commission should just look at the
23 definition of local traffic in this agreement and this
24 agreement, and you don't have to look at all the terms

1 of the agreement. Is that correct?
2 A. Yes. My answer was that the value of evaluating
3 those other definitions.
4 Q. Okay. But that's not the way that you look at
5 opt-end situations, is it?
6 Don't you tell a CLP you take the package, you
7 take the related terms, you cannot piece part one
8 provision or one definition out of an agreement, you
9 look at the entirety of the agreement?
10 A. Yeah, I mean, again, entirety is not exactly
11 accurate because of the court ruling on that. What the,
12 I guess, law of the land now is, and I'm not a lawyer,
13 but it's my understanding that anyone can request a
14 network service interconnection or element, they are
15 then bound to take the related or interrelated rates,
16 terms, and conditions of that. So it's not necessarily
17 an entire agreement or an entire section, but anything
18 that's interrelated.
19 Q. Okay. Well, that's good because right on that
20 same page, 96, I asked you about whether any of those
21 other CLP agreements would also have the interrelated
22 language that we had talked about.
23 And what was your answer at line 13?
24 A. I don't know off the top of my head whether any of

1 those have it or not. I don't know.
2 Q. And my question was: And you have just indicated
3 that not necessarily any of those would also have the
4 language that deals with how dial-up ISP traffic would
5 be accomplished, is that not correct.
6 And what was your answer?
7 A. Right. It may or may not differ.
8 Q. So we came to the conclusion that all you were
9 really telling the Commission in your testimony was that
10 you have agreements out there, and that they have
11 some -- some of them have the same definition of local
12 traffic, but not necessarily all the other interrelated
13 terms, isn't that correct?
14 A. Again, I don't know that I would state that the
15 ISP compensation is interrelated to this definition. So
16 I think we have a disagreement about what the
17 interrelated is.
18 Q. Well, let's talk about the interrelated language.
19 That's a good segue. Let's go over to page 100.
20 Now, you took the position in your deposition that
21 the interrelated language relates to Voice over Internet
22 Protocol, is that correct?
23 A. Yes.
24 Q. Now, in your testimony, you indicated that not --

1 it wasn't connected but just co-incidentally that that
2 interrelated language was put into the agreement when
3 you were negotiating Voice over IP. Do you remember
4 that?
5 A. I'm not sure that I said that it wasn't --. I
6 mean, I think I had one sentence that addressed it in
7 testimony. I don't know that it said everything you
8 just said.
9 Q. Well, when we were talking about it in your
10 deposition, I said were you trying to tell the
11 Commission that the language, this section is
12 interrelated to 5.3.1.1, dealt only with Voice over IP.
13 Do you remember that?
14 A. Yes.
15 Q. And remember you said, no, you were just trying to
16 tell the Commission that it was the timing that was
17 related?
18 A. No, I think my answer was around whether that's
19 what the testimony established. And I -- if you can
20 point me to that. Because the testimony didn't get into
21 the provisions and how they applied. Just my testimony
22 is one sentence that states here's the time period and
23 here's when it was put in.
24 In the deposition, I don't know that we ever

1 established that as kind of a policy issue.
2 Q. Okay. Now, in your summary today, on, I guess,
3 the third page, you state: The voice (sic) of VOIP was
4 raised through the context of switched access traffic
5 because that's where the disagreement centered: Were
6 Voice over Internet Protocol transmission switched
7 access or not. As you can see from the language, the
8 parties agreed to disagree on this issue. However, they
9 agree that Voice over IP would not be compensated as
10 local. Since Voice over IP transmissions are not routed
11 over switched access arrangements, the language just
12 states --.
13 What language were you referring to there?
14 A. The language in 5.3.3 which deals with Voice over
15 IP.
16 Q. And you're saying that that language is the
17 language -- and only that language is interrelated to
18 5.3.1.1?
19 A. Again, what I've testified to and what the
20 deposition was about was the fact that the Voice over IP
21 transmission language or issue, I should say, is why the
22 parties put a definition of switched access traffic into
23 the agreement. Prior to the parties negotiating a
24 mutually agreed upon provision to deal with VOIP, there

1 was no definition of switched access traffic. In fact,
2 when this language was introduced in May -- May 22,
3 there was no switched access traffic definition in the
4 red lines that went back and forth until, I believe,
5 July 11. We could check the production of documents for
6 that exact date.
7 But, anyway, almost two months went by, there was
8 no definition of switched access traffic. In the
9 context of our negotiations, again, we were trying to
10 resolve any open issues that we could, and sometimes we
11 were trying to resolve those, you know, for all, other
12 than Mississippi, regionally, even if we had one
13 Commission order, because sometimes it's difficult to
14 have different provisions in different states.
15 At that point in discussions, we had agreed,
16 BellSouth, as a company, had agreed to some language
17 about agreeing to disagree with other carriers. So I
18 said, you know --. We brought up the fact that this
19 might be a way to handle it. And in that, I believe,
20 again, July 11 time frame is when we first proposed to
21 AT&T a switched access traffic definition. And that was
22 put in there to deal with the Voice over IP issue.
23 Q. Are you saying -- did you just say it was July the
24 11th that you came up with a definition of switched

1 access traffic?
2 A. I believe the first time that it appeared in the
3 red lines, I believe, was July 11. Again, I'd want to
4 look at that production of document to make sure. But I
5 believe that's the first time that red line reflects a
6 definition of switched access traffic.
7 Q. Well, this language, this interrelated language
8 where it says "this Section," can you explain why the
9 word section is capitalized with a capital S if it only
10 related to Voice over Internet Protocol?
11 A. Again, I'm not saying that it only related to
12 Voice over Internet Protocol. The parties were
13 negotiating that issue. And because of what I talked
14 about in my summary, that I'll be glad to go back
15 through if we need to, we interrelated it so that --.
16 Let's think, for example, local calling area or local
17 traffic is something that BellSouth has multiple
18 provisions in interconnection agreements for. Some of
19 the interconnection agreements state that it will be --
20 local traffic will be defined as anything that
21 originates and terminates in BellSouth's tariffed local
22 calling areas. That's one definition. Some things are
23 more akin to what AT&T had in their first
24 interconnection agreement, which is originating and

1 terminating in the LATA, but billed by the originating
2 party as local.
3 And then we have this definition, obviously,
4 that's at issue here, and we do have multiple agreements
5 with that type definition in them.
6 So when you establish what's going to be
7 considered local traffic, there are other things,
8 obviously, within that agreement that are affected by
9 that. If we've agreed, for instance, to have all calls
10 that originate and terminate in the LATA, except for
11 calls that originate or terminate over switched access
12 arrangement, than that -- when we were doing the Voice
13 over IP issue, we needed to address that in that
14 context.
15 If a carrier had had the traditional, let's say,
16 BellSouth, local calling area type definition, then we
17 would have need to have stated that Voice over IP
18 transmissions, which originate and terminate in the
19 local calling area, instead of the LATA. And, again,
20 Voice over IP transmissions don't typically traverse
21 switched access arrangements, because that's the issue
22 is that they look more -- or they don't traverse those.
23 So anyway, at that point, when we did that, we put
24 in the interrelated section to say, okay, now if

1 somebody adopts this Voice over IP provision, which was
2 highly likely given the fact that it was a more
3 compromised provision or an agree to disagree provision,
4 they would also need to have the local traffic
5 definition that matched that.
6 Q. Okay. I will ask the question again. Is it your
7 testimony that this section is interrelated to 5.311
8 (sic) applied only to Voice over IP or it applied to the
9 entirety of the section?
10 A. Again, I'm going to state that the language --
11 MS. CECIL: If I could try to get a yes or no,
12 and then she's fine to explain, but --
13 COMMISSIONER ERVIN: I think if you could do
14 that Ms. Shiroishi, it would help me, if nobody else.
15 A. Okay. I guess the answer is I haven't actually,
16 and I think I told you this in my deposition, I hadn't
17 given much thought to that issue because my testimony
18 was around why it was put in.
19 Yeah, I think the section being interrelated, my
20 answer would be, yes, it does relate back to the entire
21 section. However, it was inserted so that if a carrier
22 wanted to adopt the VOIP provisions, they would take the
23 corresponding local traffic definition.
24 Q. So I think what I heard you say is, yes, it does

1 apply to the entire section, and not just Voice over IP?
2 A. Right. But then I explained the insertion.
3 Q. Okay. All right.
4 Now, I want to talk to you about some discussions
5 that you had with Mr. Peacock when he called you at
6 home. Do you remember?
7 A. Yes.
8 Q. What date was that?
9 A. I don't recall off the top of my head. I believe
10 Mr. Peacock testified in his deposition that it was July
11 18, but I don't have any notes from that call.
12 Q. And was that unusual for him to call you at home?
13 A. Yes. That wasn't a normal thing. But, again, we
14 were working pretty much around the clock to try to
15 finalize, because we had to file the Commission -- the
16 agreement with the Commission. But that was the only
17 conversation I had with him where he called me at home.
18 Q. So he called you, I think, on the 17th, is that
19 correct?
20 A. 17th or 18th, I'm not sure.
21 Q. And then the parties signed the agreement on the
22 19th, correct?
23 A. Yes.
24 Q. I want to show you one more chart.

1 (Pause.)

2 COMMISSIONER ERVIN: This would be No. 3. So

3 let's mark this as AT&T Shiroishi Cross Examination No.

4 3.

5 AT&T SHIROISHI CROSS EXAMINATION EXHIBIT NO. 3

6 (Identified)

7 Q. Ms. Shiroishi, this is an excerpt from

8 Mr. Peacock's testimony. And as you indicate, he was

9 indicating that evidently there was a communication that

10 you had with him on the 17th, and then the next day you

11 sent this e-mail to him. Now, could you read that for

12 me what you say in terms -- starting with "attached"?

13 A. Attached is the red line as a result of last

14 night's call. I realize we don't need the intraLATA

15 stuff, so I've red lined. Everything else that you

16 accepted last night is shown as accepted.

17 Q. And the red line language that you included in

18 that same e-mail is listed below. You see that?

19 A. Yes.

20 Q. And that first paragraph says: IntraLATA toll

21 traffic as defined as any telephone call that originates

22 and terminates in the same LATA, and is billed by the

23 originating party as a toll call.

24 You understand that?

A. Yes.

Q. And then compensation for intraLATA toll traffic --, and it goes on to say that the parties would compensate each other for intraLATA toll traffic, basically, at switched access rates.

Is that a fair summary?

A. Yes.

Q. So these two were deleted after you had the conversation with Mr. Peacock when he called you at home?

A. I don't know that that's the case. Again, I don't have calls from the -- when Mr. Peacock -- or notes, but I believe he testified that was on July 18. This e-mail was sent on July 18th. We talked that night.

Again, I don't believe that this red line was a result of the call that I had strictly with Mr. Peacock. Again, that was just he and I talking. At that point in time, we did not -- we didn't go through a document as we would on a normal call. He called me at home to ask me some questions about a -- some provisions.

Q. Ms. Shiroishi, I don't mean to be argumentative, but what do you say in the text of your e-mail?

Attached is a red line as a result of last night's call. I realize we don't need the intraLATA stuff, so

1 I've red lined. Everything else that you accepted last
2 night is shown as accepted.
3 A. Right. But keep in mind we were having calls
4 almost daily at this point. I don't know that this call
5 was a result of --. Actually, I don't think at all that
6 this was a result of the call I had just with
7 Mr. Peacock at my home. I believe this was a result of
8 a conference call we had with other people as well.
9 Q. You had a conference call that "last night"?
10 A. Yeah, we were working very late to try to get
11 these --. In fact, there's one e-mail from Mr. Peacock
12 to myself at 2:21 a.m.
13 Q. So, I guess I'm totally confused now.
14 Mr. Peacock called you at home, it was a one on
15 one conversation, is that correct?
16 A. Yes, it was.
17 Q. And it was on July the 17th?
18 A. Again, I don't recall. I don't have any notes
19 from that date. And I'm not sure what date that was.
20 It was at the very end of our negotiations, but I don't
21 know that it was on July 17.
22 Q. All right. So when you sent him an e-mail on the
23 18th that said, "attached is the red line as a result of
24 last night's call," are you trying to tell the

1 Commission that last night's call wasn't necessarily the
2 call you had with Mr. Peacock which was one on one, but
3 it was a bigger team call?
4 A. I don't know. I don't recall. Again, we could go
5 back through and see. I believe that Mr. Peacock
6 testified that call actually took place on July 18.
7 Q. Which call? The private call?
8 A. When he called me at home, yes.
9 But, no, we were having conference calls
10 frequently. Sometimes multiple times in the day, and
11 some of them did go very late into the night. When he
12 called me at home, I don't recall us actually walking
13 through red line language.
14 Q. Okay. Well, does it really matter whether or not
15 you deleted this language as a result of a call with
16 Mr. Peacock or a greater team call? The language you
17 struck still indicates that intraLATA toll traffic is
18 not going to be compensated -- will be compensated at
19 switched access. You deleted that language.
20 A. Right. And if you read the terms, I mean it's
21 pretty clear why we deleted it. It was, No. 1,
22 redundant, we already had provisions in there dealing
23 with how we were going to handle it.
24 Q. Excuse me. Where was it redundant, where else did

1 you have it covered?
2 COMMISSIONER ERVIN: Ms. Cecil, I think she
3 was telling you.
4 MS. CECIL: Okay. Well, you know,
5 sometimes --
6 A. Well, in the local traffic definition we put in an
7 exclusion or an exception, yes, exclusion or exception.
8 And then if you read this, it says intraLATA toll
9 traffic is defined as any telephone call that originates
10 or terminates in the same LATA, and is billed by the
11 originating party as a toll call.
12 Well, again, we had decided at this point to
13 depart from that. That wasn't how the parties were
14 going to handle what was what for compensation purposes.
15 Instead, we had agreed that the compensation of a call
16 would be determined by whether it originated or
17 terminated in the LATA, and then we were excluding
18 anything that traversed switched access arrangements.
19 So the provision here, "and is billed by the originating
20 party as a toll call," would not have lined up with the
21 definition that the parties had agree to with local,
22 which also included an exclusion.
23 Q. Okay. Just so I'm clear, then, the language here
24 that allows you to charge switched access rates for

1 intraLATA traffic was redundant to the underlying
2 language there, except for calls that originated or
3 terminated through switched access arrangements?
4 A. Right.
5 Q. So you took this very specific language and you
6 replaced it with those few words there?
7 A. Right. Again, there's two sections here, but the
8 upper intraLATA and toll traffic would not -- I mean you
9 would have an inconsistency had you left that in along
10 with this, because this says that local traffic's going
11 to be anything that originated or terminated in the LATA
12 except for calls that traversed switched access
13 arrangements. If you had left in the intraLATA toll
14 traffic as defined as any telephone call that originates
15 or terminates in the same LATA, and is billed by the
16 originating party as a toll call, you would be back
17 towards more of what the parties originally had in their
18 first interconnection agreement. And that kind of gets
19 to Commissioner Kerr's question earlier of what benefit
20 was there to AT&T.
21 The benefit was that now there wasn't a, quote,
22 "founding" of how it was billed. The parties were going
23 to decide what was local and what was not based more on
24 the routing of that traffic.

1 Q. All right. Just a couple more areas and then I'll
2 be finished.
3 Now, you agree with me that you admitted in your
4 deposition that you're not a trunking expert, is that
5 correct?
6 A. Correct.
7 Q. I want to talk to you about your testimony where
8 you talked about other language in the agreement which
9 supports your understanding as to what switched access
10 arrangements would be. And you referred the Commission
11 to various provisions from Attachment 3 that talk about
12 interconnection trunking, correct?
13 A. Yes.
14 Q. And I think as we discussed in your deposition, as
15 you interpret that language, AT&T would have to take all
16 of its local traffic and route it only over local
17 trunks, is that correct?
18 A. Again, "have to," that's a hard phrase for me to
19 answer to. What the definition says is that how -- how
20 AT&T and BellSouth route that traffic is going to be
21 determinant of the compensation that's paid for it.
22 Q. Well, and I don't want to be argumentative, but in
23 order for AT&T to have its local traffic compensated at
24 local compensation rates, it would have to, according to

1 you, route that traffic over a local-only trunk, is that
2 correct?
3 A. Yeah. And, actually, the trunks in an industry
4 are called local toll trunks. There are local only, but
5 there're also local toll trunks that are referred to as
6 LTLT trunk groups. And so that, as well as a trunk type
7 that would be utilized, and would, under this
8 definition, qualify for reciprocal compensation rates.
9 Q. But you could not run it over whatever a switched
10 access arrangement is, it would have to be this local
11 trunk, correct?
12 A. Correct.
13 Q. And are you aware that AT&T currently, and has in
14 the past, sent traffic to BellSouth, which would be
15 intraLATA, interLATA, and local, over the same trunk
16 group?
17 A. I'm aware of that because in the deposition we
18 talked about that, yes.
19 Q. Now, you agreed with me in your deposition that it
20 is technically feasible for AT&T to send all of its
21 kinds of traffic over one trunk group?
22 A. For termination, yes.
23 Q. Termination, right.
24 And did you read Mr. King's testimony where he

1 said to take advantage or to put everything over a local
2 trunk group would be a massive undertaking or a
3 significant undertaking for AT&T?
4 A. I saw that part of his testimony, yes.
5 Q. And did that surprise you that he took that
6 position?
7 A. Not since the parties have had discussions.
8 Obviously, prior to this coming to a complaint
9 proceeding, the parties have discussed the issue after
10 we realized the disagreement. So I had heard Mr. King
11 say that before.
12 Q. And that's consistent because at the time you were
13 negotiating this language, including these provisions
14 about interconnection, you admitted that you didn't know
15 much about AT&T's network, did you?
16 A. Right. When I negotiate, again, the parties who
17 come to the table are there to represent and bring to
18 the table their network architecture, their issues, and
19 I'm there to represent BellSouth.
20 Q. And those positions in that Attachment 3 that you
21 refer to, they refer to a conversion taking place, that
22 the parties are to convert existing facilities to
23 facilities that are described in this Attachment 3.
24 Remember that?

1 A. Yeah. I believe it says upon either party's
2 request.
3 Q. Right. Now, has BellSouth asked AT&T to do any
4 conversion of any trunks since second interconnection
5 agreement was signed?
6 A. No. Again, a conversion wouldn't be necessary.
7 The language sets out how compensation is going to work.
8 To the extent AT&T wanted some type of conversion to
9 effectuate how compensation works or change that, then
10 they could request that as well.
11 Q. A conversion that would be necessary if AT&T is
12 currently using one trunk for all kinds of traffic? It
13 would be necessary?
14 A. Or there could be -- I mean, also, have to keep in
15 mind, that AT&T has different types of traffic and
16 services. And the TCG arm, for example, or the Teleport
17 arm is more local in nature. They could decide to route
18 that traffic for termination through those existing what
19 are called, again, LTLT trunk groups. So that's another
20 way to handle it, not necessarily to convert all of the
21 existing switched access, but to do that. We actually
22 have several carriers who have approached us about doing
23 that. They are now, because of mergers and
24 acquisitions, in a position to have combined access

1 intrastate and interstate and local, and they want to
2 separate and keep their local arm on one set of trunk
3 groups, even to the extent of having a specific code or
4 ACNA, that we call it, and then they're accessed on
5 another.
6 Q. Now, Ms. Shiroishi, you understand from reading
7 Mr. King's testimony, hearing him testify, that AT&T has
8 a combined local and long distance network, correct?
9 A. Yes.
10 Q. BellSouth doesn't. You only have a local network,
11 right?
12 A. Right. Our long distance network is handled,
13 obviously, through BSLD, a separate affiliate.
14 Q. Right. You resell somebody else's long distance
15 service, you don't have long distance switches anywhere
16 in the country, do you?
17 A. Not to my knowledge.
18 Q. So, it's not going to be any problem for you to
19 run all of your traffic on a local interconnection
20 trunk, because that's all you have, right?
21 A. Correct.
22 Q. And so when AT&T terminates those calls that come
23 from your customers over those local trunks, you're
24 getting that at local reciprocal comp rates, aren't you?

1 A. Right. Pursuant to the definition, it does
2 qualify, yes.
3 Q. Because you don't have -- you're not running
4 through switched access arrangements because you don't
5 have to, right?
6 A. Well, we don't have any, no.
7 Q. That's right.
8 So AT&T, which is trying to get in the local
9 market, and trying to use an efficient long distance
10 local network, they can't; they're not on equal footing
11 with respect to how local -- you're interpreting this
12 agreement, are they?
13 A. Well, I don't think that it's fair to say they're
14 not on equal footing. I mean we talked about earlier
15 about the fact BellSouth has different local traffic
16 definitions. I gave you an example of three. There are
17 actually more than that out there. It's kind of like
18 cellular plans today. I could walk into AT&T wireless
19 and ask for a plan that has, you know, a thousand
20 daytime minutes, and no night and weekends, because I
21 know that's when I'm going to use it. Or I might need
22 no daytime and lots of nights and weekends. That's kind
23 of how our local traffic definitions are. We have
24 multiple flavors available, and they're out there as an

1 option.
2 To the extent that we can negotiate something
3 mutually, that's always an option. Or through the 252-I
4 provisions, AT&T could adopt anyone else's definition of
5 local traffic. So whether or not --. You know, we do
6 have different definitions to help fit different CLPs'
7 models of what they want and how they want that to work.
8 Q. Right now AT&T and BellSouth are going head to
9 head competing in the local market here in North
10 Carolina, correct?
11 A. Correct.
12 Q. But you're always going to have an advantage in
13 your pricing by virtue of how your network is
14 established, and how you interpret this provision in the
15 contract, isn't that correct?
16 A. Well, I don't know that I'd say that's an
17 advantage or not. Again, that depends on how AT&T is
18 configured, how its network is, and what definition of
19 local traffic that it chooses to have in its
20 interconnection agreement with BellSouth.
21 Q. Right. And the point would be, AT&T would have to
22 take all of its existing network and convert it into a
23 local network to be on the same level playing field that
24 you now have by virtue of how you're interpreting that

1 provision?
2 A. Again, there are local toll trunks available that
3 AT&T -- or TCG and Teleport have. So that's another
4 option of how they route that for termination.
5 Q. But AT&T has told you that they're routing, as
6 much as they possibly can, local traffic using as much
7 of their existing long distance network as possible.
8 You know that, don't you?
9 A. I know that subsequent to the agreement being
10 signed because it's been raised as an issue. But,
11 again, the parties agree to a definition that says what
12 it says. There are other definitions available. Even
13 at this date, if AT&T were to say, don't like this
14 definition any more, I want a new one, they could adopt
15 a provision from any other agreement. Now, obviously,
16 that doesn't take care of our problem up to date, but
17 going forward.
18 Q. Okay. So now you understand the level playing
19 field, and what the concern is. Do you now appreciate
20 why AT&T was so desperate to get a LATAwide definition
21 for local traffic?
22 A. Well, no, actually, I mean if you couch it in
23 terms of the equal playing field, you know, BellSouth,
24 as I said, does have a definition that says local

1 compensation is governed by the local calling area
2 defined by -- we have one that's BellSouth's tariffs and
3 one that's either parties -- or the originating party's
4 tariffs. I mean that -- then you're outside the scope
5 of how it's routed; and you're back into an arena where
6 compensation is based on what I talked about earlier.
7 So, I guess, if the level playing field is the
8 concern, then that could be something that AT&T took
9 advantage of to get back to that arena.
10 Q. Okay. Final question, when you agreed and
11 negotiated that language, you did not understand, as
12 you've admitted, how the AT&T network operated, did you?
13 A. Again, when I negotiate, I bring to the table --
14 we talk about the issues. To the extent that a
15 company's network architecture comes up and is raised
16 for them, then we discuss that issue. I was aware,
17 because of the point of interconnection issue, about
18 that and how the architecture works there.
19 But, no, unless AT&T said, here's my concern,
20 here's what I want or don't want, and here's how our
21 network is set out, I don't know that that would have
22 been something that I would have been aware of.
23 Q. Yeah. Now, Ms. Shiroishi, you admitted to me in
24 your deposition you didn't understand much about the

1 AT&T network when you entered those negotiations, we
2 went through that, wouldn't you agree?
3 A. Yeah. Again, I don't -- "understand", I don't
4 know, is the right word. It wasn't discussed, it wasn't
5 anything that was an issue that we were negotiating.
6 MS. CECIL: No further questions.
7 COMMISSIONER ERVIN: Mr. Cauthen.
8 MR. CAUTHEN: I don't have much left.
9 COMMISSIONER ERVIN: We're heartbroken.
10 MR. CAUTHEN: I know you are.
11 CROSS EXAMINATION BY MR. CAUTHEN:
12 Q. I do, however, want to ask you about your document
13 retention policy. Are your attorneys involved in
14 this -- coming up with your document retention policy?
15 A. Yes.
16 Q. And they have agreed to this immediate destruction
17 of everything as soon as you sign a contract?
18 A. Again, there are guidelines, and we can provide
19 those to you, if you'd like, about how we do it. But
20 once a contract is signed, the multiple versions of red
21 lines and notes aren't retained, because for space
22 purposes as well as the fact that at that point we have
23 a signed document.
24 Q. I'm more interested, actually, in things like

1 personal notes which, I gather, you simply don't keep or
2 have, is that right?
3 A. Right. The personal notes are dependent, again,
4 if an issue comes up where --. Here's a good example.
5 If we know that we're agreeing to something in an
6 interconnection agreement that currently we aren't able
7 to operationalize, but we've agreed we'll do and we've
8 talked about how that will be handled, certainly those
9 notes would be kept to help in that operationalizing of
10 that provision and making sure that we keep on. But if
11 it's just notes such as, you know, need to get this
12 language to this person or need to review this, then
13 that type language is not kept.
14 Q. And communications between you and the other
15 companies you do keep. Like, if you send somebody an
16 e-mail at AT&T, you would keep that?
17 A. Yes, to the extent that there's any official
18 correspondence. If it's just in the context of here
19 are, you know, red lines or this or that, that may not
20 be kept forever.
21 Q. But anything that discusses something substantive
22 you would keep?
23 A. Yeah. Again, I'd have to go back and look at the
24 policy. Right now we actually do have an antitrust

1 lawsuit, so anything at a particular point in time
2 forward we're retaining, and that's been for quite
3 sometime now. But anything prior to that I'd need to go
4 back and refer to the policy and see.
5 Q. I have personal issues about paper trails, you
6 understand. I'm strongly in favor of them.
7 A. Unfortunately, we already have one solid floor
8 with nothing but paper, and that's just from first files
9 because of the history of doing this since '95, but --
10 and then in '96 it really taking off.
11 Q. Did AT&T ask you about this issue of the
12 exclusion? I mean, did they ever come to you and say
13 what is being excluded here? What does this mean?
14 A. We did talk about the exclusion. As you can tell,
15 the language or -- I don't know if we talked much about
16 it today, but originally the language BellSouth proposed
17 said, except through -- sorry, "except for those calls
18 that originated or terminated through switched access
19 arrangements as established by the ruling regulatory
20 body." And we talked a lot about what does that mean.
21 And BellSouth said, well, our tariffs are what we put
22 forth. Those are then approved, and thus established,
23 by the State Commission or FCC.
24 So we talked about that, and, again, we made that

1 change to say "State Commission or FCC" versus "ruling
2 regulatory body." And those were our discussions around
3 that.
4 Q. Presumably AT&T knew at that time what their
5 traffic was traveling over?
6 A. I would assume. But, again --
7 Q. Even if you didn't, they must have, because it's
8 their traffic.
9 A. I would assume they did, yes.
10 Q. And it's your belief that they understood at the
11 time this thing was signed that the facilities they were
12 using would exclude that traffic from that definition,
13 is that correct?
14 A. Yeah, I always hate to testify about other
15 parties' understandings. But definitely we had
16 conversations --
17 Q. I'm talking about your belief.
18 A. But, yes, at the time we signed the agreement,
19 actually, until the dispute arose, yeah, that's what we
20 talked about. And, again, I talked about earlier, we
21 have other companies, actually, MCI's an example, who do
22 just that. They route their traffic separately so
23 that -- what they tell us is that's easier for them.
24 Easier.

1 So the issue was -- had came up and we talked
2 about it. And, yeah, I had no reason to believe that
3 there was any problem there.
4 Q. I may have misunderstood you. I thought I
5 understood you to say that VOIP was not over switched
6 access. Did you say that?
7 A. Correct. Typically Voice over IP transmissions
8 are routed, and, actually, part of the problem with them
9 is they might even have local numbers or look like that.
10 So they're not typically routed over switched access
11 arrangements.
12 Q. How does that provision protect anybody from VOIP,
13 then, being that VOIP is local?
14 A. I don't think that it does protect us.
15 Q. So it's just CISP (sic) and other switched access,
16 then? It's not VOIP?
17 A. Even not ISP. I mean, the protection issue isn't
18 one that BellSouth was concerned about or knew about. I
19 mean, our sole goal with this definition is anything in
20 the LATA's local unless it originates or terminates over
21 switched access arrangements. Switched access
22 arrangements are pretty clearly -- or very clearly
23 defined in our tariff, which everybody got the pleasure
24 of getting a copy of today, so the ISP and the Voice

1 over IP was never -- I mean that's not part of that
2 exclusion.
3 Q. So you never suggested to AT&T that that was the
4 main reason for that?
5 A. No. Again, when we were negotiating the Voice
6 over IP provisions, there isn't a section or a sentence
7 that talks about that. But this, "except for those
8 calls that originated or terminated," I didn't. No. In
9 fact, I had to read that testimony several times to
10 understand that.
11 Q. I did too. I had to read it all several times,
12 and I still don't understand it.
13 MR. CAUTHEN: That's all. Thank you.
14 COMMISSIONER ERVIN: All right. Redirect.
15 MR. SHORE: Thank you, Mr. Commissioner.
16 REDIRECT EXAMINATION BY MR. SHORE:
17 Q. Ms. Shiroishi, Ms. Cecil asked you some questions
18 about the one occasion that Mr. Peacock called you at
19 your home. You recall those questions?
20 A. Yes.
21 Q. She didn't get into the substance of that
22 conversation. Could you tell the Commission what it was
23 that Mr. Peacock called you about, what he said to you?
24 A. We were talking, again, finalizing last minute

1 issues and were discussing several things. Billing
2 coupon trunks and facilities, which is a compensation
3 issue dealing with dedicated -- I believe this
4 Commission actually heard in the concept of symmetrical
5 compensation for another carrier who arbitrated. I know
6 we talked about that issue. And he was just asking me
7 some questions.
8 Again, it wasn't an established conference call or
9 anything to that nature. I think we had actually been
10 on a call that day, and they indicated -- AT&T indicated
11 they'd be working late, and I gave Mr. Peacock my home
12 number in case anything came up because we did have to
13 get this agreement filed by, I believe it was the 19th,
14 the day we signed, to submit to the Commission. So we
15 had several issues. But, again, it was not a sit down
16 negotiation session. There were questions and answers.
17 Q. Okay. Ms. Cecil asked you about -- she summarized
18 that on her Cross Examination Exhibit No. 3,
19 Mr. Peacock's testimony, where he says that you attached
20 a red line, saying you didn't realize you needed that
21 intraLATA stuff, that intraLATA language. Do you recall
22 those questions?
23 A. Yes.
24 Q. AT&T never requested that you remove that language

1 from the agreement, is that right?
2 A. Correct.
3 Q. Would that language, had it stayed in the
4 agreement, been inconsistent with the way AT&T is
5 interpreting this exclusion language in this case?
6 A. Yeah, definitely. If that language had been in
7 there, I don't think that they can make this argument.
8 MR. SHORE: That's all I have.
9 COMMISSIONER ERVIN: Questions from the
10 Commission?
11 Commissioner Kerr.
12 And I have some as well.
13 COMMISSIONER KERR: Weigh in here for a
14 second.
15 I bet you wished you had majored in Akkadane
16 (phonetic spelling) language in college instead of
17 classical language. We'd swear you as an expert
18 COMMISSIONER ERVIN: Commissioner Kerr and
19 I've already decided that maybe knowing, you know, Greek
20 or something might be helpful.
21 THE WITNESS: Well, I have to say, actually,
22 my concentration was Latin, which people laugh about,
23 but I say sometimes that it has come in more handy than
24 any other profession.

1 COMMISSIONER ERVIN: I know Mountain North
2 Carolina, so I know Mountain in depth.
3 EXAMINATION BY COMMISSIONER KERR:
4 Q. Let me ask you, if you would, to look -- I don't
5 know what number it is, but anyway, the blow-up that's
6 up there. And we spent a lot of time talking about
7 what -- the underlying section there, the clause that
8 follows the comma in the first sentence, and the parties
9 don't seem to agree about what that means. But it
10 appears to me that the parties did agree about what the
11 first clause meant.
12 We -- as I read that, it appears that the
13 agreement to this language is going to result in a
14 transition. In other words it's something that we've
15 been doing things one way before, and now we're going to
16 do them differently, would you agree with that?
17 A. Yes.
18 Q. And it says that has traditionally been treated as
19 intraLATA toll will now be treated as local for
20 intercarrier compensation. So we've been doing it one
21 way, and now we're going to do it another way, correct?
22 A. Correct.
23 Q. Specifically, what traffic of AT&T's were you
24 referring to as having been traditionally treated as

1 intraLATA toll that would now be treated in this
2 LATAwide local concept?
3 A. Good question. And I hate it that I have to talk
4 in technical terms, so I'll do that and then back up
5 and --
6 COMMISSIONER ERVIN: Just don't use Latin.
7 A. Okay. Well, it might sound like it.
8 But, again, there are different trunking
9 arrangements which are -- delve into or are kind of a
10 specific term for how the parties route their traffic.
11 And there are things called local toll trunk groups, and
12 there are things that are switched access trunk groups.
13 And they all have modifiers that I won't go into,
14 although I tend to call them LTLT because that's
15 quicker. When you have a local toll trunk group, and
16 traffic -- let's say under the first AT&T
17 interconnection agreement, traversed that local toll
18 trunk group, if that call had been billed by AT&T as
19 local, then under the first agreement, that would have
20 to be compensated as access --. I'm sorry, I said that
21 wrong. If it had not been billed by AT&T as local, then
22 it would be terminated and the termination paid to
23 BellSouth would be switched access.
24 Under this definition, those type calls now are no

1 longer subject to access charges on the termination end.
2 Q. So there would be those type calls plus what you
3 would call a switched access arrangement?
4 A. Right.
5 Q. Okay. At the time you were negotiating this
6 language for BellSouth, what did you understand to be
7 the mix of AT&T traffic as between those two types of
8 calls?
9 A. I don't --
10 Q. Let's call them type A and type B, because I'll
11 lose track of them. So as between type A being the
12 local trunk, and type B being the switched access, what
13 was the mix of that traffic?
14 A. I'm not sure we ever talked about that. I'm
15 almost positive we did not talk about that. And I don't
16 know that I would have had any knowledge about that.
17 Again, AT&T would have, hopefully, been aware of that.
18 Q. Right. But on behalf of BellSouth, you were
19 negotiating a transition in the billing arrangements
20 that applied to type A, but not to type B --
21 A. Right.
22 Q. -- because of the exception language, without
23 having any understanding of the magnitude of what that
24 would mean in terms of revenues or --?

1 A. Not specifics. And, again, this was a definition
2 that we had with other carriers. So AT&T could avail
3 themselves of it through adoption of that issue, even if
4 BellSouth hadn't mutually agreed to it. So that's one
5 of the things in negotiating that is a bit different in
6 this environment with the 252-I rule.
7 Q. If AT&T had none of the type A and all or mostly
8 the type B traffic, why would it make sense for them to
9 adopt this language with your interpretation of the
10 exception?
11 A. Well, I don't know that it would under that. But,
12 again, there is another arm that has the same agreement
13 which is Teleport and TCG, and they do actually have a
14 significant amount of traffic that is traversed under
15 these LTLT or type A trunk groups.
16 Q. But this wasn't adopted language, this was
17 negotiated language. This was a unique party, AT&T,
18 negotiating this with BellSouth?
19 A. Right. And we were negotiating AT&T and TCG.
20 Q. Right. And if you had most -- if you had
21 predominantly switched access traffic, if I had
22 predominantly switched access traffic and you were
23 representing BellSouth and we negotiated this, the
24 exception would really swallow the rule. In other

1 words, we were making a transition, we had been paying
2 access charges for most of our traffic. The first
3 sentence seems to say, well, we're adopting a LATAwide
4 concept, meaning we are going to transition traffic from
5 having paid access to treating it as local. Except all
6 of it or most of it, actually, we're not making any
7 change. I mean, isn't that how your interpretation
8 would work out as a practical matter?
9 In other words, if the majority of your traffic
10 were switched access?
11 A. Right.
12 Q. You, basically, in the first half of that sentence
13 would be saying we're going to make this transition and
14 how we're going to treat most of your traffic. Except
15 we're really not, because the exception's going to reach
16 back and swallow this transition we've made. Do you
17 disagree with that as kind of the practical result of
18 your interpretation?
19 A. Not if that were the case. Unless, like I talked
20 about earlier, the networks, they were looking into,
21 again, separating, you know, TCG would be quite the
22 local type arm with all their LTLT, and ATX would be --
23 I'm sorry, those are ACNAs that I'm talking about --
24 the access arm.

1 COMMISSIONER KERR: Okay. Thank you.
2 COMMISSIONER ERVIN: Mr. Wilkins.
3 We're all going to get in this act now.
4 EXAMINATION BY COMMISSIONER WILKINS:
5 Q. In going through this file, you, in one of your
6 testimonies, stated that we had extensive discussion
7 about the exclusion of traffic that originated or
8 terminated through switched access arrangement. In the
9 course of those discussions, we drew diagrams on the
10 white board and specifically discussed the calls that
11 traversed switched access arrangements, and the fact
12 that they would be expressly excluded from the
13 definition of local traffic.
14 What date did that occur and who was in the room
15 with -- from AT&T at that point?
16 A. We had several face to face meetings, which
17 obviously would have to have been in order -- it was a
18 June 6 meeting. And these are actually in our
19 production of document responses.
20 Do you have a copy --.
21 Okay. These are actually in our interrogatory
22 responses that we did provide a copy to the Commission,
23 and the attendants are listed. We also had some other
24 conference calls and another meeting on -- I can't

1 remember the exact date, but it is listed out there in
2 that interrogatory.
3 Q. And also the Southern Bell people were listed
4 also?
5 A. Yes.
6 COMMISSIONER ERVIN: Given that those -- given
7 that the discovery requests aren't ordinarily considered
8 part of the record for purposes of our decision making,
9 can you tell me what data requests -- I mean
10 interrogatory responses we're talking about so I could
11 get them included in the record? Because I was going to
12 ask that same question.
13 A. POD or interrogatory 2 or 3.
14 MS. CECIL: I think it might help if I could
15 make a few comments, and I'm sure Mr. Shore might also.
16 COMMISSIONER ERVIN: This may be -- you may
17 have gone over some of this in the depositions, and may
18 be proposing to handle it that way.
19 MS. CECIL: No. Because we did not get
20 answers to any of the discovery until the Wednesday, and
21 I took her deposition on a Monday. So we did not cover
22 it in the deposition.
23 COMMISSIONER ERVIN: All right.
24 MS. CECIL: We filed formal discovery on

1 BellSouth and got some responses. When our witnesses
2 were deposed on Monday, I got an informal request from
3 Andrew on Sunday evening, and AT&T provided documents
4 informally. I did not get --. We didn't do any kind of
5 formal communication regarding that.
6 So I think one thing that the Commission will
7 have to decide is whether or not they want those
8 documents from AT&T which, obviously, Mr. Shore's been
9 using during the proceeding today. But those were not
10 formally requested, that's what I'm trying to indicate.
11 MR. SHORE: Two issues, I think, maybe will
12 help, Commissioner Ervin.
13 COMMISSIONER ERVIN: At this point I'm in bad
14 need of help.
15 MR. SHORE: Let me try. I'm usually not
16 successful, but who knows.
17 COMMISSIONER ERVIN: That may be due to my
18 limitations and not yours.
19 MR. SHORE: We would be happy to agree to put
20 all of our interrogatory responses into the official
21 record of this case, and that would clarify any problem.
22 With respect to the issue Ms. Cecil mentioned,
23 as you know, we didn't get their testimony until Friday.
24 And I did ask her did she have any supporting documents,

which she was kind enough to provide on Monday morning when I went to depose her folks. Those are already in the record. We identified all of those documents, that they produced, as exhibit 2 to Ms. Stevens' deposition, and we've already agreed that Ms. Stevens' deposition and the exhibits would be part of the record. And we handled that earlier. So those are in the record.

I appreciate Ms. Cecil's concern and that's why I had agreed to that earlier.

COMMISSIONER WILKINS: Well, did we not touch on this when Ms. Stevens said that there was no white board. Was that not part of her testimony?

COMMISSIONER ERVIN: I think to some extent we've got two --. What we've got is we've got one side that says, yes, such a thing happened, and we've got another side that says, no, it didn't. And ultimately we're going to have to decide that, and I'm just trying to make sure we've got a sufficient record to do that on.

Ms. Cecil, is Mr. Shore's description of the materials attached to Ms. Stevens' deposition correct as you understand it?

MS. CECIL: The only exception is that we did provide some documents in addition to the ones that have

1 been identified for the record in terms of the
2 depositions.
3 You remember, Mr. Shore, we gave you a stack,
4 you went through them. You had us copy certain of those
5 documents, and only those that were copied were attached
6 to the deposition. So there were others that I gave you
7 that you discarded.
8 MR. SHORE: The ones I discarded, I mean, and
9 the rationale was they provided notes after this dispute
10 arose. Didn't have any -- obviously can't --. Well,
11 after the dispute, those are the ones I didn't include.
12 MS. CECIL: I would just take the position
13 that --
14 MR. SHORE: If you want to dump those into the
15 record, I'm fine with it.
16 COMMISSIONER ERVIN: I think we just solved
17 your problem.
18 I think the simplest way, rather than us
19 trying to work all this out on the record right now, is
20 without objection I'm going to receive into the record
21 all of the discovery responses that were provided by
22 either party that are in our record currently.
23 And in addition to that, I will receive into
24 the record those documents that Ms. -- that AT&T

1 supplied to BellSouth informally under the circumstances
2 that were described on the record a minute ago, and
3 request that a copy of those be provided by AT&T so that
4 prior to your filing those, that you send a copy to
5 Mr. Shore so that he'll have a chance to verify that
6 that's, in fact, what was provided. And if there's any
7 dispute over that, that somebody will let me know using
8 the procedures that we've been following to date dealing
9 with those. And then all of those materials will be
10 deemed part of the record.
11 MS. CECIL: Thank you.
12 COMMISSIONER ERVIN: And will be received into
13 evidence.
14 Is there any objection to that procedure?
15 MS. CECIL: No, sir.
16 MR. SHORE: Not from BellSouth.
17 COMMISSIONER ERVIN: All right.
18 All right, I think at that point it becomes
19 our problem.
20 And I take it, to follow up on Commissioner
21 Wilkins' question, because that was going to be a
22 question I asked too, was that once I review these
23 documents, I'm going to find out what the parties have
24 to say about who said what, to when, and under what

1 circumstances. And that I understand -- and that when I
2 do that, I'm going to find out there's just an
3 irreconcilable conflict that I'm going to have to
4 resolve.
5 Is that fair?
6 All right. Have you got more questions?
7 COMMISSIONER WILKINS: No, I don't.
8 EXAMINATION BY COMMISSIONER ERVIN:
9 Q. Ms. Shiroishi, I've got one in addition to the one
10 that Commissioner Wilkins asked. Let's go back to 5.3.1
11 which is the definition of switched access traffic. I
12 think you agreed, under cross examination from
13 Ms. Cecil, that the interrelationship language that's
14 the last sentence in that provision applies to the
15 entire definition. I think you ultimately agreed to
16 that.
17 What is your --. It was not clear to me, however,
18 what you understand that interrelationship sentence to
19 mean. When that sentence says that this definition is
20 interrelated to 5.3.1.1, how is it interrelated?
21 A. That definition, it will --
22 Q. In other words, how do you contend that it's
23 interrelated. I understand there's a dispute.
24 A. The interrelationship, again, would come into play

1 if a carrier, for instance, would ask to adopt the VOIP
2 provisions of AT&T's agreement, but maybe not like their
3 local traffic definition. They wanted a traditional
4 local calling area or BellSouth's local calling area as
5 defined in our tariffs. Then you would have a problem
6 in reconciling what the parties had agreed to on VOIP,
7 which was within the LATA, how we were going to handle
8 it, versus the smaller local calling area.
9 So that sentence was actually proposed by
10 BellSouth to help us in the case that a carrier said, I
11 want to adopt the VOIP provisions of AT&T's agreement,
12 we would then have a provision that says this is
13 interrelated back to the local traffic definition. So
14 they would also have to adopt that.
15 Q. There's language in 5.3.3 that deals with subjects
16 other than Voice over Internet Protocol, isn't there?
17 A. There are. But, again, that language was put
18 in -- not until the parties negotiated VOIP.
19 Q. And I understand that that may be the fact. I'm
20 just trying to understand how we can have language that
21 says that the entire section is interrelated to 5.3.1.1,
22 but only one sentence in a broader paragraph can somehow
23 have any interrelated effect.
24 You understand my problem?

1 A. Yes, sir. And again --
2 Q. Help me.
3 A. Okay. Again, obviously, hindsight is 2020. And,
4 obviously, after all the things come out, you look at
5 it, and AT&T's position, they've obviously stated here.
6 But the definition of switched access traffic was put
7 into the agreement to deal with whether or not Voice
8 over IP was switched access.
9 And so, in the context of negotiating that
10 language, the parties did that via a mechanism, or the
11 mechanism we used was to put in that definition of
12 switched access traffic. And, again, it does have the
13 interrelated section back, and that was because
14 BellSouth wanted to insure that if a CLP wanted to adopt
15 that provision, it would also adopt the local traffic
16 provision.
17 Q. All right. I mean, I don't purport to be an
18 expert on pick and choose law. And you disclaim being a
19 lawyer, I'm afraid I don't have that ability, I'm afraid
20 I am one, maybe not much of one.
21 My understanding of the way the pick and choose
22 rules operate is that you just can't take everything in
23 isolation, but you do have to take interrelated
24 provisions; however, they have to be actually

1 interrelated. And just because you say they're
2 interrelated, that doesn't necessarily make them
3 interrelated.
4 If, in fact, 5.3.1.1 really doesn't have anything
5 to do with Voice over Internet Protocol, because it's
6 not provided over switched access arrangement, or if it
7 doesn't have anything to do with ISP traffic, because
8 ISP traffic isn't provided over switched access
9 arrangement, what is the actual interrelationship
10 between 5.3.3 and 5.3.1.1?
11 A. Yeah. And, again, you make a good point. You'll
12 notice the interrelated section is not included in
13 5.3.1.1, because if a carrier came to me and said I want
14 to adopt AT&T's definition of local traffic, I don't
15 have a need for them to take any other section along
16 with that.
17 In the Voice over IP, again, let's take -- let's
18 say, for example, someone said I want to adopt AT&T's
19 Voice over IP provisions. So those provisions state
20 that the parties agree to disagree. However, anything
21 that originates and terminates -- or it won't be
22 compensated as local. But that deals with the entire
23 LATA.
24 If they had --. Let's say, they said, well,

1 that's all I want is just --
2 Q. I guess my problem --. I mean I understand your
3 argument, but I guess my problem is, I'm a CLP and I
4 come to you and say, well, I want to adopt this
5 definition of switched access traffic for whatever
6 reason. And you then, say, well, look at the last
7 sentence. It says you've also got to go on 5.3.1.1.
8 And I say, no, I don't, because it doesn't have any real
9 actual interrelationship. You may say it does, but it
10 doesn't, as a matter of fact. And I'm prepared to
11 litigate that question.
12 And we go to litigate it, you come in before my
13 colleagues, what is your argument that there is, in
14 fact, any actual interrelationship so that you're --. I
15 mean, why does that get you anywhere?
16 A. Well, I think, the scope would be where we would
17 go. Again, we've agreed in this definition that it's
18 anything within the LATA, obviously, with the exclusion
19 of switched access. The VOIP, again, is anything in the
20 LATA. So those two match up, and that's where the
21 interrelationship comes in. We do have language with
22 other carriers that talks about Voice over IP
23 transmissions within the local calling area, or within
24 the traditional local carrier area. Those two

provisions of what that scope is going to be, whether it's LATA or whether it's a smaller local calling area, would be the interrelationship.

COMMISSIONER ERVIN: All right. Any further questions from members of the Commission?

If not, are there any questions based on the questions asked from the bench?

MR. SHORE: Just one.

COMMISSIONER ERVIN: All right. Mr. Shore.

REDIRECT EXAMINATION BY MR. SHORE:

Q. Ms. Shiroishi, are TCG and Teleport parties to the second interconnection agreement along with AT&T Corp.?

A. TCG and Teleport have an agreement which is virtually identical to AT&T's agreement. I believe --. I believe that's the way it's structured. But the provisions are the same.

COMMISSIONER ERVIN: Certainly think they're parties to this action if nothing else.

Any further questions from any of the parties?

If not, Ms. Shiroishi, I thank you for coming to join us this afternoon, and you're excused.

Ms. Cecil, you want to introduce your cross exhibits?

MS. CECIL: Yes, sir, I would.

1 AT&T SHIROISHI X-EXAMINATION EXHIBITS NOS. 1, 2, and 3
2 (Admitted)
3 COMMISSIONER ERVIN: And they are received.
4 Mr. Shore, I don't believe you moved
5 Ms. Shiroishi's exhibits.
6 MR. SHORE: She had one exhibit, and I'd like
7 to move that into evidence.
8 BELLSOUTH SHIROISHI DIRECT EXAMINATION EXHIBIT No. 1
9 (Admitted)
10 COMMISSIONER ERVIN: That will be received
11 into evidence.
12 Out of an abundance of caution, without
13 objection, all exhibits that were attached to the
14 testimony of -- the prefiled testimony of all witnesses
15 would be admitted into evidence subject to my previous
16 ruling on the motion to strike; and all cross exhibits
17 that were identified during the cross examination of any
18 witness will be admitted into evidence subject to my
19 former ruling.
20 I believe that completes the case for
21 BellSouth, does it not?
22 MR. SHORE: It does.
23 COMMISSIONER ERVIN: I don't believe there's
24 any prefiled testimony from the Public Staff. So I

1 believe we now come to the closing arguments that I had
2 indicated that I would allow. We've been going a little
3 bit less than an hour and a half. I think we'll take a
4 five-minute standing break, and let everybody stretch
5 their legs. And if you need to set anything up, you can
6 do that and we'll reconvene in five minutes.
7 (A RECESS WAS TAKEN)
8 COMMISSIONER ERVIN: Let's come back to order.
9 And, Mr. Shore, I think you're first.
10 MR. SHORE: Okay.
11 COMMISSIONER ERVIN: On the theory that the
12 party that has the burden of proof gets to go last.
13 MR. SHORE: Certainly happy to go first in
14 that case.
15 I'll just stay over here because I don't
16 intend to take up all the ten minutes that you allotted,
17 and probably not anywhere close to it.
18 The fact is, the parties will have the
19 opportunity to --
20 COMMISSIONER KERR: Mr. Shore has tickets to
21 the ball game tonight, so I doubt he's going to be --
22 MR. SHORE: And that's not the reason I'm not
23 taking up ten minutes, but the reason is this, is that
24 you all are going to receive post-hearing briefs and,

1 perhaps, proposed orders from the party. And I can
2 assure you that BellSouth, and I'd be willing to bet
3 that AT&T is going to brief these issues extensively.
4 There's a lot of complicated issues in this case dealing
5 with contract interpretation, a lot of factual
6 discrepancies, and we're going to have the opportunity
7 to brief those for your consideration. And we'll
8 certainly do our best to make those as clear as we can,
9 while at the same time naturally advocating our
10 position.
11 But I just want to touch in closing on a point
12 that Ms. Cecil raised in her opening, because I think it
13 is very important, not just in this case, but in any
14 case that comes before you or any other tribunal, and
15 that's credibility.
16 She told you that you needed to assess the
17 credibility of the witnesses that came before you in
18 this proceeding, and that was a very very important
19 thing. And I could not agree more. And I wanted to
20 talk about credibility of some of AT&T's witnesses, some
21 of the things they said, and some of the things I think
22 might be important to consider as you think about this
23 case. And in no particular order, other than the order
24 they testified, I'll start with Mr. King.

1 Mr. King said that he was told that BellSouth
2 needed the language at issue in this case to protect
3 BellSouth from a ruling that Voice over Internet
4 Protocol would be deemed interLATA. Well, he also told
5 you that was BellSouth's position, and he couldn't
6 explain to you why it was that BellSouth needed to be
7 protected from a ruling that was consistent with the
8 position that BellSouth maintained throughout, since
9 this has been an issue.
10 He also told you that this exclusion here,
11 where it talks about intraLATA toll traffic, and then
12 has an exception right there in the same sentence, he
13 told you that that exclusion was only meant to apply to
14 interLATA traffic. And he also told you that interLATA
15 traffic is never considered local. Think about that.
16 Does that make sense in the context of this language.
17 Mr. Peacock testified that, today, that this
18 language was tied to the parties' resolution of the ISP
19 traffic and Voice over Internet Protocol traffic. In
20 his deposition just Monday, he testified exactly the
21 opposite. And I won't belabor the point here and quote
22 it for you, but I'll certainly quote it, I can assure
23 you, in our briefs. But when I asked him the specific
24 questions in his deposition Monday, was this language

1 part of the resolution of the ISP traffic issue, his
2 sworn testimony was no.
3 When I asked him the specific question, was
4 this disputed language part of the parties' resolution
5 of the Voice over Internet Protocol issue, his sworn
6 testimony was no. And I think you need to weigh what
7 that testimony was on Monday, and weigh it against what
8 he testified to today here in front of you.
9 Finally, with respect to Ms. Stevens.
10 Ms. Stevens said that local traffic was not a key issue.
11 She told you that she only took notes on the parties'
12 key issues, and that the definition of local traffic was
13 not a key issue as the parties negotiated in 2001. Ask
14 yourselves, is that consistent with everything else
15 you've heard about today under the prefiled testimony.
16 Thanks very much for your consideration.
17 COMMISSIONER ERVIN: All right. Ms. Cecil.
18 MS. CECIL: Thank you, again, Commissioners,
19 for your time and attention today.
20 This is the first thing you need to look at.
21 The Mississippi Interconnection Agreement. BellSouth
22 and AT&T agreed to a LATAwide concept definition of
23 local traffic. From there they moved to the
24 negotiations in the other states. So you can imagine

1 that AT&T's Mr. Peacock and others would be quite
2 perplexed and perturbed to negotiate this agreement, as
3 they thought they had negotiated, to then begin sending
4 traffic which they thought was going to be local
5 traffic, and have it basically rejected because of some
6 misunderstanding from the parties.
7 So, you know, you just got to always focus on
8 the fact that we had leaped the hurdle. We had been
9 able to convince BellSouth, for whatever reason, to go
10 with the LATAwide definition of local traffic. And that
11 set the mind set going into, as I said, the North
12 Carolina negotiations as well.
13 The other thing to bear in mind is that when
14 AT&T filed its arbitration petition, it did not
15 arbitrate the definition of local traffic. Now, you
16 know this company. That makes no sense whatsoever. If
17 there was a dispute over what was going to be local
18 traffic, what was not going to be local traffic,
19 particularly after they had obtained it in Mississippi,
20 you could have bet that they would have been arbitrating
21 that issue in this state. Didn't occur.
22 Then, when you look at the BellSouth response
23 to the AT&T arbitration petition, it says the dispute
24 relative to local traffic is what. The very issues that

1 Mr. Peacock has told you is the reason that we ended up
2 with this particular language. It fits together very
3 nicely.
4 Look at the credibility of the witnesses.
5 Congratulations to Ms. Shiroishi on her
6 promotion. I think that's wonderful. But on the other
7 hand, let's put it in context. She has been moving from
8 job to job, getting greater experience within the
9 company, but when you ask her about some of the details
10 about these negotiations, she can't answer. She had
11 difficulty telling us which CLPs that she had worked
12 with before she was moved into a supervisory situation.
13 The little details seem to always lose in some form or
14 fashion.
15 And then the other thing I found incredible
16 about the way that she communicates is that she sent
17 that e-mail to Mr. Peacock saying, regarding our
18 conversation last night, and then when I cross-examined
19 her about it, I couldn't figure out whether she was
20 talking about a conversation she had last night with
21 Mr. Peacock solely, or whether it was a conference call.
22 So, bear that in mind, that it's a very difficult
23 situation sometimes to figure out what she's trying to
24 communicate.

1 I'm still not convinced I understand what her
2 position is relative to Voice over IP. And when you
3 combine the fact that she came into the North Carolina
4 negotiations without much history, she was the person
5 who recommended the new definition of local traffic, she
6 was the one that said she had the discussions with the
7 parties, but we can't find any evidence of that.
8 I'm very delighted that you're going to look
9 at the discovery responses, because you're not going to
10 be able to find any documentation where she can confirm
11 what she has said she told AT&T. It just doesn't exist.
12 On the other hand, AT&T, Ms. Stevens, has
13 given you a stack of notes that she's taken, we've given
14 other red line versions, and we've searched and searched
15 and searched, and there's nothing in any of those notes
16 that supports that Ms. Shiroishi told anybody from AT&T
17 that switched access arrangements basically means
18 intraLATA traffic as we traditionally know it. That
19 should have been something that should have been
20 documented in the record.
21 And with respect to Mr. Shore's comments about
22 deposition testimony, et cetera, you might remember that
23 I asked Ms. Stevens regarding what she said about
24 whether or not local traffic was a key issue. And she

1 said it wasn't a big issue, it wasn't a key issue,
2 because the parties had already agreed to it. AT&T
3 didn't even include it in its arbitration petition. So
4 she said in that deposition, my definition of a key
5 issue was one that was still being negotiated.
6 Second thing. Mr. Shore took objection to
7 what Mr. Peacock said about why the exclusion was agreed
8 to. Well, look at that deposition transcript very
9 carefully. What Mr. Peacock said was, no, it wasn't
10 related solely to ISP, but it related to other access
11 issues as well, and he went on to describe that.
12 So look at the entirety of the deposition. We
13 feel very confident that you're not going to find any
14 inconsistencies. We believe the overwhelming amount of
15 the evidence indicates that from an intent perspective,
16 AT&T sure thought that they were getting LATAwide local
17 traffic into this interconnection agreement.
18 And like Mr. Shore says, we will adequately
19 brief the issue and look forward to a reasoned decision
20 from the Commission.
21 Thank you very much.
22 COMMISSIONER ERVIN: All right. Mr. Cauthen,
23 would you like to be heard at this time?
24 MR. CAUTHEN: No, thank you, sir.

1 COMMISSIONER ERVIN: I don't want you to feel
2 left out or anything.
3 MR. CAUTHEN: Happy to.
4 COMMISSIONER KERR: To feel left out?
5 MR. CAUTHEN: To feel left out.
6 COMMISSIONER ERVIN: All right. Other than
7 the matter of briefs and proposed orders, is there
8 anything else we need to take up at this point?
9 MS. CECIL: Not that I'm aware of.
10 COMMISSIONER ERVIN: If not, is our usual
11 practice of 30 days after the mailing of the transcript
12 satisfactory to the parties?
13 MR. SHORE: I think so. I think if some issue
14 arises, I'm sure Ms. Cecil and I --
15 COMMISSIONER ERVIN: We'll work with you if
16 something comes up. I need to establish some kind of
17 date just to start with.
18 All right. In the absence of some objection,
19 I will order that briefs and/or proposed orders, you can
20 file both, one, or the other, will be due 30 days from
21 the mailing of the last volume of the transcripts. We
22 will look forward to receiving the depositions and other
23 documents that we talked about during the course of the
24 hearing.

1 If there is nothing further that needs to come
2 before us this afternoon, the Commission appreciates
3 your participation. It's an interesting case. I can't
4 truthfully say that I look forward to trying to untangle
5 this, but we'll do the best we can. And in this matter
6 we are adjourned.
7
8 WHEREUPON, this hearing was adjourned.
9
10
11
12
13
14
15
16
17
18
19
20
21
22
23
24

1
2
3
4 CERTIFICATE
5 The undersigned Court Reporter certifies that
6 this is the transcription of notes taken by her during
7 this proceeding and that the same is true, accurate and
8 correct.
9
10 Martha Criste 2/24/03
11 Martha Criste
Court Reporter II
12
13
14
15
16
17
18
19
20
21
22
23
24

COPY OF TRANSCRIPT

BEFORE THE FLORIDA PUBLIC SERVICE COMMISSION

RE: DOCKET NO.: 020919-TP
Complaint of AT&t Communications of the Southern States, L.L.C., Teleport Communications Group, Inc., and TCG South Florida for Enforcement of Interconnection Agreements with BellSouth Telecommunications, Inc.

COPY

DEPOSITION OF COPY

ELIZABETH R.A. SHIROISHI

April 25, 2003
10:20 a.m.

Suite 520
675 West Peachtree Street
Atlanta, Georgia

Susan H. Horner, RPR, CCR

FLORIDA PUBLIC SERVICE COMMISSION
DOCKET
NO. 020919-TP EXHIBIT NO. 10
COMPANY/
WITNESS: C-Depo. of E. Shiroishi
DATE: 5-07-03

Alexander Gallo Associates, Inc.
COURT REPORTING VIDEO SERVICES
• ATLANTA'S TECHNOLOGICAL LEADERS IN LITIGATION SUPPORT •

ATLANTA, GEORGIA WASHINGTON, DC CHICAGO, ILLINOIS NEW YORK, NEW YORK

Telephone (404) 495-0777
Facsimile (404) 495-0766
Toll Free (877) 495-0777

Complimentary Conference Rooms
Throughout Georgia And
Major Cities Nationwide

500 The Candler Building
127 Peachtree Street
Atlanta, Georgia 30303

www.galloreporting.com

1 APPEARANCES OF COUNSEL

2 **On Behalf of AT&T and Teleport Communications Group, Inc.:**

3 LORETTA A. CECIL, ESQUIRE

4 Womble, Carlyle, Sandridge & Rice

5 One Atlantic Center - Suite 3500

6 1201 West Peachtree Street

7 Atlanta, Georgia 30309

8 (404) 888-7437 FAX (404) 870-4826

9 E-mail: lcecil@wcsr.com

10 **On Behalf of BellSouth Telecommunications, Inc.:**

11 ANDREW D. SHORE, ESQUIRE

12 Senior Regulatory Counsel, Legal Department

13 Suite 4300

14 675 West Peachtree Street, N.E.

15 Atlanta, Georgia 30375-0001

16 (404) 335-0765 FAX (404) 614-4054

17 E-mail: andrew.shore@bellsouth.com

18 **On Behalf of the Florida Public Service Commission:**

19 (Appearing via telephone)

20 PATRICIA CHRISTENSEN, ESQUIRE

21 Staff Counsel, Florida Public Service Commission

22 2540 Shumard Street

23 Tallahassee, Florida 32399-0850

24 (850) 413-6220 FAX (850) 413-6221

25 E-mail: pchristie@psc.state.fl.us

1 **On Behalf of the Florida Public Service Commission:**

2 (Appearing via telephone)

3 ANNE MARSH, ESQUIRE

4 Staff Counsel

5 Florida Public Service Commission

6 2540 Shumard Street

7 Tallahassee, Florida 32399-0850

8 (850) 413-6220 FAX (850) 413-6221

9

10 **Also Present:**

11 Billy C. Peacock

12

13

14

15

16

17

18

19

20

21

22

23

24

25

1 **Deposition of Elizabeth R.A. Shiroishi**

2 **April 25, 2003**

3 ***ELIZABETH R.A. SHIROISHI***, having been

4 first duly sworn, was examined and testified as

5 follows:

6 **EXAMINATION**

7 **BY-MS.CECIL:**

8 Q. Good morning, Mrs. Shiroishi, I'm

9 Loretta Cecil, and I'm going to be taking your

10 deposition in the Florida Public Service

11 Commission Document Number 020919-TP on behalf of

12 AT&T and the TCG Companies in this proceeding.

13 Let's begin by getting some

14 background information about yourself. Would

15 your state your name for the record, please?

16 A. Elizabeth R.A. Shiroishi.

17 Q. Would you spell the last name?

18 A. S-H-I-R-O-I-S-H-I.

19 Q. And are you employed?

20 A. Yes.

21 Q. Who is your employer?

22 A. BellSouth Telecommunications.

23 Q. What's your business address?

24 A. 675 West Peachtree Street, Atlanta,

25 Georgia, 30375.

1 Q. What's your current title with
2 BellSouth?
3 A. Director Interconnection Services
4 Marketing.
5 Q. What's your age?
6 A. 27.
7 Q. And have you ever been deposed
8 before?
9 A. Yes.
10 Q. When was that?
11 A. I was deposed earlier this year in a
12 similar case of AT&T in North Carolina. I have
13 also been deposed in a global naps case in
14 Florida.
15 Q. What did you do to prepare for your
16 deposition today?
17 A. I reread the North Carolina documents
18 in a similar case, including the transcript of
19 that deposition, the transcript of that hearing,
20 the briefs of both parties and reviewed other
21 documents relative to this case.
22 Q. What other documents?
23 A. Testimony. Although I didn't review
24 the testimony immediately or just prior to, and
25 the interrogatories that BellSouth produced.

1 Q. And Mrs. Shiroishi, you are the same
2 list Elizabeth Shiroishi who previously filed
3 both direct and rebuttal testimony in this
4 proceeding; is that correct?
5 A. Correct.
6 Q. Why were you selected to file
7 testimony in this proceeding?
8 A. I was involved in the negotiations
9 of this agreement, and I also have
10 responsibility for contract negotiations for
11 BellSouth and certain disputes arising from such
12 negotiations or contracts.
13 Q. Have you filed testimony in other
14 proceedings on behalf of BellSouth other than in
15 the current proceeding?
16 A. Yes.
17 Q. Could you tell me what those dockets
18 have been?
19 A. I filed testimony in the State of
20 Florida in the global naps complaint against
21 BellSouth and also in the generic docket phases
22 1 and 3, I believe it was. And in an Atlantic
23 Telecommunications. I believe that was an
24 arbitration and not a complaint. I have also
25 filed testimony in the State of Georgia.

1 Q. At which proceeding in Georgia?
2 A. A complaint against BellSouth from
3 TCG.
4 Q. Now, let's talk about your
5 educational background for a few minutes. In
6 your direct testimony you indicated that you a
7 graduated from Agnes Scott with a B.A. in
8 classical languages and literature; is that
9 correct?
10 MR. SHORE: Let me interrupt just
11 for a second. We had agreed previously that
12 her deposition from the North Carolina case was
13 in evidence in this case and that that would be
14 the case, and the reason that we did that was
15 in order to streamline the discovery and
16 streamline the hearing, so all those questions
17 are in the case already and will be introduced
18 into evidence. I mean, I'll get let you go a
19 little bit if you want to ask the same
20 questions, but at some point I'm going to start
21 objecting as asked and answered.
22 I understand these are preliminary
23 questions, but they're already in the record and
24 I thought the point was to try and streamline
25 things so I just want to get that out. Now,

1 I'm not objecting, but I'm getting very close to
2 objecting as asked and answered.
3 MS. CECIL: That's fine. If you
4 want to tell the witness not to answer the
5 question, that's fine.
6 MR. SHORE: I will, very shortly. If
7 we're going to repeat the entire North Carolina
8 deposition that's already in the record, I fully
9 intend to do that.
10 MS. CECIL: I'm entitled to get
11 answers that may be different for Florida than
12 from North Carolina.
13 MR. SHORE: Well, to that extent,
14 why don't you ask her if her answers are any
15 different, that's one thing but --
16 Q. (By Ms. Cecil) All right. Again,
17 Ms. Shiroishi, you indicated that you got a
18 bachelor's in classical language and literature,
19 is that correct, from Agnes Scott?
20 A. Yes.
21 Q. And no other college degrees?
22 A. A minor in music.
23 Q. And I think we talked about in your
24 North Carolina deposition that your first college
25 out of college was as a high school teacher at

1 Newton County Schools; is that correct?
2 A. Yes.
3 Q. You did that for a year and then
4 you became employed by BellSouth; is that
5 correct?
6 A. Correct.
7 Q. And your first job at BellSouth when
8 you joined them in '98 was as a pricing
9 analyst; is that correct?
10 A. Correct.
11 Q. And what educational background did
12 you have to qualify for that position in 1998
13 as a pricing analyst?
14 A. My answer is the same as the North
15 Carolina.
16 Q. That would be basically spreadsheet,
17 working with Excel data, no specific training in
18 communications; is that correct?
19 A. Correct.
20 Q. How long did you have the pricing
21 analyst job after you joined BellSouth?
22 A. Approximately a year.
23 Q. And then you moved into a
24 collocation product manager position; is that
25 correct?

1 A. Yes.
2 Q. Was that a promotion for you?
3 A. Yes.
4 Q. And your responsibilities in the
5 collocation product manager position, I believe
6 in North Carolina you indicated that was funding
7 type request needs; is that correct?
8 A. That was one of the aspects, yes.
9 Q. What others?
10 MR. SHORE: I'm going to object.
11 She's answered this, it's in the record in this
12 case. Her answer isn't any different, because
13 we've agreed to evidence in the Florida case, so
14 I'm going to object and instruct her not to
15 answer.
16 You're just going through the
17 transcript and asking her the exact same
18 questions, that's a total waste of time, so I'm
19 going to instruct her not to answer that. If
20 you've got questions, ask them, but these
21 questions have been answered in this case.
22 Q. (By Ms. Cecil) Okay. What
23 experience did you have in the pricing analyst
24 job that qualified you for the collocation
25 project management job?

1 MR. SHORE: Same objection. That has
2 been asked and answered in this case.
3 Q. (By Ms. Cecil) How long did you stay
4 in the collocation product manager possession?
5 MR. SHORE: Same objection. I mean,
6 she's answered the questions.
7 MS. CECIL: Are you going to show
8 me in the deposition where she answered that
9 because she didn't answer that one?
10 MS. CHRISTENSEN: Y'all, could I
11 interrupt for just a second? I'm having trouble
12 hearing the witness when she's answering, so is
13 it possible to put the phone a little bit
14 closer to her?
15 THE WITNESS: I can speak louder. Is
16 this better?
17 MS. CHRISTENSEN: Yeah. That's much
18 better, thank you. I'm sorry.
19 Q. (By Ms. Cecil) How long were you in
20 the collocation product manager role?
21 A. My answer is the same as the North
22 Carolina, approximately six months.
23 Q. And when you moved --
24 MR. SHORE: Let me just -- you
25 asked me to point that out, let me do that.

1 THE WITNESS: I may be in the
2 hearing transcript.
3 MR. SHORE: Well, to the extent the
4 hearing transcript is still in evidence in this
5 case because we had the same agreement with
6 respect to that.
7 Q. (By Ms. Cecil) So six months?
8 A. (Moving head up and down.)
9 Q. And then from that position where
10 did you move?
11 MR. SHORE: Same objection. If you
12 want to tell them what job you had next, that's
13 fine, but the testimony hasn't changed.
14 THE WITNESS: My entire employment
15 history up through January of this year has been
16 the same.
17 MS. CECIL: All right.
18 Q. (By Ms. Cecil) Well, let's just
19 shortcut it, then. What happened to you in
20 January of this year?
21 A. Actually, in February of this year I
22 was promoted to director.
23 Q. And what level position is director?
24 A. Director at BellSouth is pay grade
25 60 and above.

1 Q. A significant level of management?
2 A. That's a hard thing to quantify
3 given when you're coming in from a different
4 corporation how you handle that, a director at
5 BellSouth has managers who report to them who
6 also have direct reports, so there is several
7 layers of management under director.
8 MR. SHORE: First level and second
9 level and that's sort of the -- that's no
10 longer used within BellSouth.
11 MS. CECIL: Okay, all right.
12 MR. SHORE: That's sort of an
13 antiquated system.
14 MS. CECIL: All right. Let's see
15 if we can clarify it this way.
16 Q. (By Ms. Cecil) When you first became
17 employed by BellSouth, were you a management
18 employee or a nonmanagement employee?
19 A. I was a management employee.
20 Q. Was that at the lowest level of
21 management?
22 A. It was not the lowest level but it
23 was close to the lowest level.
24 Q. All right. Since you became a
25 BellSouth employee until you were promoted to

1 director in January of this year, how many
2 levels of management have you moved?
3 A. Moved?
4 Q. Yes.
5 A. Five levels.
6 Q. Five levels. And does that mean
7 that you have been promoted five times since
8 1998?
9 A. Yes.
10 Q. What are your current job
11 responsibilities?
12 A. Currently I have responsibility for
13 overseeing the negotiations of all
14 interconnection and resell agreements with CLEC.
15 I have the group of negotiators who actually
16 handle those accounts and negotiate those
17 agreements. Also we have the processing of the
18 agreements from signature to get those finalized
19 and to our state regulatory offices for filing.
20 I also have what's called quality control or
21 processing of certain tariffs.
22 Q. Which of those responsibilities were
23 new to you with your promotion?
24 A. This last promotion?
25 Q. Yes.

A. No additional responsibilities, I was already doing those works functions.

Q. So you got promoted, but no additional work came with the promotion?

A. Correct. I was in somewhat of an acting title prior to doing all those responsibilities.

Q. How long had you been in the acting title?

A. I believe it was October of last year, 2002.

Q. I believe in the North Carolina hearing you indicated that with your most recent promotion you are now reporting to Jerry Hendrix; is that correct?

A. Yes. Although I was reporting to Jerry Hendrix prior to that as well.

Q. So you still report to Jerry Hendrix after the promotion?

A. Yes.

Q. Do all of the BellSouth contract negotiators report to you in your position?

A. For CLEC negotiations they either report to me or someone who reports to me, yes.

Q. And how many individuals would that

1 be?
2 A. Currently we have eleven contract
3 negotiators.
4 Q. And is it my understanding from your
5 answer that you also handle disputes with CLEC
6 in your new position?
7 A. Yes. To the extent that a despite
8 arises about contract language interpretation, I
9 do get involved.
10 Q. When did you become involved in the
11 interconnection negotiations with AT&T for the
12 State of Florida?
13 A. BellSouth and AT&T started negotiating
14 some items regionally to try to settle issues,
15 so the characterization of quote, "for the State
16 of Florida" I think is a little bit misleading
17 because at the time I became involved we were
18 actually negotiating issues jointly outside of
19 Mississippi for the other eight states to try to
20 settle some issues regionally, and that
21 involvement was April, May 2001 time frame.
22 Q. So for purposes of the deposition
23 today I should just refer to them as the
24 negotiations and not specific Florida
25 negotiations?

1 A. That's fine. There were some things
2 that were specific to Florida because of the
3 arbitration schedules and when we had to file
4 the agreements. So some things did happen for
5 certain states, but as far as regionally a lot
6 of the issues were resolved at one time for all
7 of those eight states.
8 Q. Well, the issues that are in dispute
9 in this proceeding, were they involved in those
10 region-wide negotiations or were they specific
11 for the State of Florida?
12 A. They were involved -- again,
13 region-wide being eight states outside of
14 Mississippi. And then we also had some
15 discussions after that were Florida specific in
16 trying to finalize the Florida agreement, but
17 the substance of the negotiations were, as a
18 whole, the eight states.
19 Q. And I believe you told me in the
20 North Carolina proceeding that you were somewhat
21 involved in the Mississippi interconnection
22 negotiations as well as the other eight state
23 region-wide negotiations?
24 MR. SHORE: I'll let you answer that
25 to the extent your testimony is different than

1 it was in North Carolina.
2 THE WITNESS: It's the same answer.
3 I became involved at the end of the Mississippi
4 negotiations when we were finalizing that
5 agreement and was more involved towards the --
6 and again, the negotiations were a very long
7 time, so towards the end of the other eight
8 state regional type negotiations.
9 Q. (By Ms. Cecil) Okay. And just for
10 the record, is it still your position today that
11 with respect to the Mississippi negotiations,
12 that when you became involved in those
13 negotiations the definition of local traffic had
14 already been agreed to by the parties?
15 A. Yes. I was not involved in the
16 discussions around that issue. The language may
17 have been finalized just typographically and
18 grammatically, but the concept had already been
19 agreed to before I became involved.
20 Q. At the time that you were involved
21 in the eight state region-wide negotiations which
22 include Florida for the issues in this
23 particular proceeding, what were the issues that
24 were pending between the parties?
25 A. Relative to local interconnection

1 attachment 3 or the entire agreement?
2 Q. Attachment 3 will be fine.
3 A. Okay. We were trying to resolve
4 issues around billing -- well, trunks and
5 facilities, symmetrical compensation, that was
6 one issue that AT&T had raised. Also, the
7 point of interconnection with the parties.
8 Voice over IP or IP telephony traffic.
9 Basically anything that the parties had
10 arbitrated that we were still trying to seek
11 resolution on in a mutually agreeable manner.
12 The definition of local traffic, those type
13 issues.
14 Q. Now, when you became involved this
15 negotiations they had already been ongoing for a
16 period of several months before your involvement,
17 is that not correct?
18 A. Longer than that even, I believe
19 that the arbitrations were filed almost a year
20 before my involvement.
21 Q. All right. I'm going to ask you
22 some questions that we did not cover, I don't
23 believe in the North Carolina proceeding in any
24 form or fashion. What was the method of
25 negotiation between the parties, was it

1 face-to-face, over the phone, exchanging letters,
2 how did the parties conduct their negotiations
3 when you became involved?
4 A. There are actually a variety of
5 methods, some meetings were face-to-face, some
6 meetings were conference calls and some times we
7 exchanged red-lines back and forth via e-mail as
8 well. And after a conference call or a
9 face-to-face meeting if changes were made,
10 changes to proposals were made, then the parties
11 would exchange red-lines to reflect those
12 language changes.
13 Q. Okay. How were decisions made as to
14 whether or not there would be face-to-face
15 meetings as opposed to conference calls?
16 A. That really depended on the
17 situation. Either party obviously could request a
18 face-to-face meeting, if that would be more
19 beneficial. And some times it is from a
20 standpoint of working through, drawing diagrams
21 or trying to work through issues. But it also
22 is more time consuming to do a face-to-face
23 meeting so conference calls some times sufficed.
24 Those were usually either at either party's
25 request or mutually agreed to between the

1 negotiators for the different companies and that
2 would be -- at that point in time Michael
3 Willis was also the head negotiator or lead
4 negotiator for AT&T and so she would be
5 responsible for setting up those calls as well.
6 Q. Was there a pre-determined schedule
7 for negotiation meetings?
8 A. Sometimes there were. Sometimes the
9 parties would plan ahead several meetings to go
10 ahead and get their calendars so that time would
11 be available on the calendars, but not always.
12 Sometimes calls were last minute or a red-line
13 might be transmitted and the parties would have
14 questions so they would decide at that point to
15 try to get together and have a conference call.
16 Q. Now, when you became involved in the
17 negotiations in the April, May 2001 time frame,
18 did you become the lead negotiator for BellSouth
19 in the AT&T negotiations?
20 A. Not overall, no. I was the subject
21 matter expert negotiator for attachment 3 for
22 local interconnection, but Michael Willis
23 retained responsibility for being the overall
24 AT&T negotiator.
25 Q. When you used the subject matter

1 expert for interconnection, could you tell me
2 what that means?
3 A. Well, the phrase I used was subject
4 matter expert negotiator, that's the person who
5 is responsible for speaking to that particular
6 section of the agreement in a negotiation
7 standpoint.
8 Q. Did that mean that you could make
9 decisions relative to any of those issues for
10 which you were the subject matter expert without
11 checking with others at BellSouth?
12 A. That would depend on what the issue
13 is. Yes, I did have authority to answer for
14 most of the issues in attachment 3. To the
15 extent that I needed to check on something for
16 my own knowledge, obviously I would go back to
17 the appropriate people to get their concurrence.
18 Or if we were going to deviate from anything we
19 had done previously or major deviation of
20 technical or process type issues then I would
21 obviously check back to insure that BellSouth
22 personnel were in agreement with those changes.
23 Q. Can you tell me which issues that
24 you could not decide on your own with respect
25 to attachment 3?

1 A. Not specifically without you asking
2 me. I mean it's not so much around the issue
3 as it might be around what the potential
4 proposal was.
5 As far as the issue goes, in
6 negotiations there are different solutions that
7 BellSouth agrees to with different carriers. So
8 if we had agreed to something previously, and I
9 was offering that to another carrier, that might
10 be a different situation than the same issue
11 where it was a totally new proposal or a new
12 process that I would want to go back and check
13 with someone else. But overall it's safe to
14 say that pretty much I have authority to make
15 that call. Now whether I exercise that without
16 checking with other people, usually I don't.
17 Usually I'll check with the people who are going
18 to implement to make sure that they are
19 comfortable with it as well.
20 Q. Okay. Well, let's talk about some
21 specifics relative to provisions related to local
22 traffic in section 5.3.1.1 of attachment 3. Did
23 you have the ability to resolve issues related
24 to that language on your own or did you need
25 to check with anyone else at BellSouth?

1 A. Within a certain guideline or
2 framework I have authority to answer and make
3 decisions on that. Again, if BellSouth were
4 going to agree to something that we had never
5 agreed to before or something that might be
6 different than our position on another issue,
7 then I would obviously check on that and get
8 concurrence from other people.
9 Q. Okay. You are aware that there is
10 language in section 5.3.1.1 that states switched
11 access arrangements as established by state
12 commissioner of the FCC. Are you familiar with
13 that language?
14 A. Yes.
15 Q. Could you have made changes to that
16 language on your own or would you have required
17 to have checked with someone else at BellSouth?
18 A. That would depend on what the change
19 was. If it were a modification that did not
20 change the meaning of that phrase but just
21 reworded the phrase slightly or something to
22 that effect I would not need to check with
23 anybody or I wouldn't feel the need to check
24 with anybody. If we were going to change the
25 meaning of what that was then I would -- again,

1 I would have the authority to do that on my
2 own but I would most probably check with someone
3 to make sure they were comfortable with it as
4 well.
5 Q. Okay. Well, let's use that language
6 we just talked about to focus more, switched
7 access arrangements. Originally when that
8 language was proposed by BellSouth it was
9 switched access arrangements as established by
10 the ruling regulatory body, is that not correct?
11 A. Correct.
12 Q. And then it got changed to switched
13 access arrangements as established by the state
14 commissioner of the FCC, is that not correct?
15 A. That is correct.
16 Q. When that change was made, did you
17 make that on your own or did you check with
18 others at BellSouth?
19 A. I do not recall specifically if I
20 spoke with anyone, I know that we did have
21 other people who were involved in those
22 discussions at BellSouth, including our
23 attorneys, so obviously we would have discussed
24 with them. I do not recall if I checked with
25 anyone outside of the people who were in the

1 meeting.
2 Q. All right. The definition of
3 switched access traffic in section 5.3.3, would
4 that have been language that you could have
5 modified on your own or would you have had to
6 check with others at BellSouth?
7 A. Again, I would have had the
8 authority to modify it on my own, I probably
9 would have checked with other people if we were
10 making substantive changes.
11 Q. There is also language in attachment
12 3 regarding compensation for calls to Internet
13 service providers, are you familiar with that?
14 A. Yes.
15 Q. Is the language in attachment 3
16 relative to those types of calls something that
17 you could have decided on your own or would you
18 have had to check with others at BellSouth?
19 A. That would depend on the type of
20 changes we were making within what BellSouth's
21 position was at the time and how we were
22 compromising and resolving that issue after the
23 FCC order, there were certain things that I
24 obviously did have the authority to do on my
25 own, but other things I would not, it would

1 just depend on what that change was.
2 Q. Well, relative to where the parties
3 ended up in attachment 3 on compensation for
4 calls to Internet service providers, did you
5 check with anyone else at BellSouth before that
6 language was agreed to?
7 A. Which particular language?
8 Q. The language in 5.3.1.1 regarding the
9 parties agreeing to implement the FCC's ISP
10 order.
11 A. Probably that language was discussed,
12 yes, with other people including Jerry Hendrix
13 at BellSouth because AT&T and BellSouth had
14 entered into a confidential settlement to address
15 past treatment of ISP traffic. And that also
16 addressed going forward how we would handle ISP
17 traffic. So probably there was some, although
18 that language is fairly benign in that all it
19 really says is that we're going to implement the
20 order.
21 Q. The definition of switched access
22 traffic in 5.3.3, we're going to talk about this
23 in a few minutes when we look at the red-lined
24 agreements, but there were changes that BellSouth
25 proposed in July for that definition, is that

1 not correct?
2 A. I'm sorry, will you repeat that?
3 Q. The definition of switched access
4 traffic in 5.3.3, there were changes proposed by
5 BellSouth in July 2001 relative to that
6 definition, is that not correct?
7 A. Well, the changes went back and
8 forth, BellSouth proposed a definition. We had
9 discussions, and AT&T proposed changes and
10 BellSouth proposed changes back, so, yes, changes
11 were made.
12 Q. The changes that were made, were
13 those changes that you made on your own or did
14 you check with others at BellSouth?
15 A. Specific to each change, I don't
16 recall, but we did have discussions, I did have
17 discussions with others at BellSouth about that
18 definition and the changes, but as far as each
19 particular change, I could not tell you, but
20 overall, yes, that language was discussed with
21 other people at BellSouth.
22 Q. And who would those other people
23 have been?
24 A. Ed Honeycutt, Michael Willis, Lea
25 Cooper, possibly Jerry Hendrix, probably Jerry

1 Hendrix, and possibly -- no, that's probably it.
2 Q. Okay. Within the section 5.3.3
3 there is also language regarding Voice Over
4 Internet Protocol, do you agree with that?
5 A. Yes.
6 Q. Would you have had the ability to
7 make changes in that language on your own or
8 would you have had to check with other folks at
9 BellSouth?
10 A. Again, it would depend on what that
11 change entailed.
12 Q. The final language that was agreed
13 to, did you agree to that yourself or did you
14 check with other folks at BellSouth?
15 A. I discussed that with other parties
16 at BellSouth.
17 Q. And who would that have been?
18 A. The same group.
19 Q. I also want to understand better how
20 the parties exchanged proposed language. At the
21 time that you entered the negotiations, who had
22 control over the contract, the proposed contract
23 language?
24 A. I'm not sure how you define control
25 over.

1 Q. Was there draft contract language
2 being exchanged between the parties?
3 A. I'm sorry, I don't understand.
4 Q. Was there draft contract language
5 being exchanged between the parties?
6 A. Prior to my involvement?
7 Q. Prior to your involvement.
8 A. I'm sure that there was, yes.
9 Q. Do you know who drafted changes to
10 that language?
11 A. Either party could propose changes to
12 the language.
13 Q. Did the parties start out with a
14 particular version of contract language --
15 A. Yes.
16 Q. -- to the best of your knowledge?
17 A. Yes. You mean like a base document?
18 Q. Yes.
19 A. Yes.
20 Q. Was the base document a BellSouth
21 document or an AT&T document?
22 A. I believe it was a BellSouth
23 document.
24 Q. Who maintained control over the base
25 document in terms of inputting changes?

A. Prior to my involvement, I don't know.

Q. All right. After you are got involved, who did that?

A. After I got involved, for attachment 3 we began exchanging documents back and forth, so BellSouth would do our proposal and e-mail to AT&T. AT&T would then either red-line in their proposal and send back or they could just send back an e-mail saying here is the changes we would like to see.

Q. Now you used the term red-line, what do you mean by that?

A. Red-line is just a phrase to describe a format used in Word, in the Microsoft Office Suite, to show changes tracked that one party makes to a document.

Q. So there was one contract and the parties would then make changes into that one contract, is that how red-lining worked?

A. Typically, yes, the parties would e-mail back and forth. Again, there could be things that were not included in the redline but that one party would send over an e-mail saying here's something we'd like to discuss at the

1 next call or here's something we would like to
2 discuss and for whatever reason they may not put
3 that in that document.
4 Q. Okay. Now, I'm going to ask again,
5 relative to making changes into that one
6 contract that you have described, who had
7 document control?
8 A. At the time that I got involved I
9 would say that both parties were contributing to
10 the document because, again, BellSouth would put
11 in our proposal, e-mail to AT&T for their
12 review. AT&T at times would put their proposals
13 in and send it back, some times it would just
14 be in an e-mail back, but both parties were
15 making changes to that attachment 3 document,
16 I'm not speaking for any other part of the
17 document.
18 Q. At the time that you reached final
19 agreement on attachment 3, who was the party
20 responsible for completing that final document,
21 was it BellSouth or AT&T?
22 A. I believe at that point that Michael
23 Willis and myself did complete the final
24 document to it except the changes.
25 Q. When language was proposed by

1 BellSouth, was it always proposed in a red-lined
2 change to this base contract document or were
3 there other ways if you communicated changed
4 language?
5 A. The majority of the time it would be
6 shown in a red-line to AT&T. There could be
7 circumstances where, especially if the parties
8 weren't -- let's take, for example, AT&T may be
9 interested in something but wasn't sure, we may
10 wait to incorporate it into the document until a
11 time when AT&T was more sure and so that might
12 be sent over separately. I can think of an
13 example of a time when I believe I Faxed a
14 document over to AT&T when they were looking at
15 particular language. And another example is a
16 time when we were talking about changing out
17 some phrases from trunk groups to point of
18 interconnection -- I'm sorry, point of interface,
19 and until the decision was made to do that we
20 didn't want to take the, to put that in the
21 red-line because it would have been substantial
22 red-lining so that was handled outside of the
23 document. But again, it would have been
24 e-mailed over or Faxed over or discussed in a
25 meeting.

1 Q. So it's possible that language could
2 have been proposed both by BellSouth and AT&T
3 outside of the red-lined process that you have
4 described?
5 A. For certain issues, yes, that could
6 be.
7 Q. All right. Do you know when AT&T
8 filed for arbitration in Florida?
9 A. I do not know the exact date.
10 Q. Were you involved in that arbitration
11 in any form or fashion?
12 A. Not prior to the filing.
13 Q. Mrs. Shiroishi, during your North
14 Carolina deposition I asked you several questions
15 about the difference between trunks and
16 facilities, what trunk groups were, would your
17 answers be today the same if I asked you those
18 same questions today?
19 A. Yes, they would be.
20 Q. In your North Carolina deposition
21 relative to trunk groups, trunks and facilities
22 I asked you questions about originating traffic
23 and terminating traffic, do you remember that?
24 A. Yes.
25 Q. And I seem to recall that you

1 indicated that there was a difference for
2 trunking relative to originating traffic versus
3 terminating traffic, is that a fair statement?
4 A. For some of the signaling type
5 things, yes.
6 Q. Now, when I asked you about that in
7 the North Carolina deposition I believe that you
8 indicated that your information regarding
9 trunking and how it works came from other
10 experts at BellSouth, is that a fair statement?
11 A. Yes.
12 Q. Have you learned any more since our
13 deposition in North Carolina about the difference
14 in signaling for originating traffic versus
15 terminating traffic?
16 A. I have not learned any more in
17 detail, I did confirm with our trunking expert
18 that there are differences in signaling on the
19 originating end.
20 Q. But what about on the terminating
21 end?
22 A. I did not actually discuss that with
23 him.
24 Q. So does your testimony stand from
25 the North Carolina deposition that local and

1 intraLATA terminating traffic can be transported
2 and terminated over the same trunk group?
3 A. Yes.
4 Q. Does BellSouth utilize switched access
5 arrangements?
6 A. For what purpose?
7 Q. For any purpose.
8 A. Yes. We offer those through our
9 tariffs for interconnection carriers and any type
10 carrier to interconnect with BellSouth.
11 Q. But do you actually use switched
12 access arrangements to handle any BellSouth
13 originated traffic?
14 A. I don't know the answer to that in
15 an overall statement.
16 Q. Why not?
17 A. Because I haven't ever been asked
18 that question.
19 Q. Are you still the interconnection
20 expert for BellSouth?
21 A. I no longer negotiate interconnection
22 issues on behalf of BellSouth since my job
23 change in last year. I still am involved in a
24 lot of interconnection issues from a regulatory
25 perspective and policy type perspective.

1 Q. When I deposed you in North Carolina
2 I asked you the question if you knew whether
3 BellSouth's intrastate tariff contained the
4 language switched access arrangements. Do you
5 remember that?
6 A. Yes.
7 Q. Do you remember what your testimony
8 was in North Carolina?
9 A. I don't recall off the top of my
10 head, I believe I said that I was not certain
11 at that point.
12 Q. Since the North Carolina deposition
13 and the North Carolina hearing, have you become
14 more familiar with BellSouth intrastate switched
15 access tariff?
16 A. I did review the North Carolina
17 tariff, yes.
18 Q. Do you know today whether your
19 BellSouth intrastate switched access tariff
20 includes the terminology, "switched access
21 arrangements", end quote?
22 A. Yes, it does.
23 Q. In those exact words?
24 A. Yes. In places.
25 Q. Nothing inserted in between it? You

1 can find the words switched access arrangements
2 in that tariff?
3 A. I don't know about with nothing
4 inserted in between it, but the words switched
5 access arrangements are in the tariff, yes.
6 Q. Again, I'm going to ask you the
7 question, are they in the tariff in the order,
8 switched access arrangements with nothing
9 inserted in between?
10 MR. SHORE: To the extent you know.
11 Obviously the document speaks for itself.
12 THE WITNESS: Yeah, I would have to
13 check the document.
14 Q. (By Ms. Cecil) So when you answered
15 me a few minutes ago that you have now checked
16 the tariff and it includes the language switched
17 access arrangements, you're now saying you don't
18 know if it includes the switched access
19 arrangements with nothing inserted in between?
20 A. I would want to check to confirm
21 that, I know that the phrase switched access
22 arrangements is in the tariff.
23 Q. In some form?
24 A. Yes.
25 Q. Now, earlier I asked you questions

about switched access arrangements being in section 5.3.1.1 of the current Florida interconnection agreement, do you recall that?

A. Yes.

Q. And originally that language said switched access arrangements as established by the ruling regulatory body as we have previously discussed. Is that correct?

A. Yes.

Q. Before this language was offered to AT&T in the Florida interconnection negotiations, had you been familiar with that language? By that I mean quote "switched access arrangements as established by the ruling regulatory body"?

A. Yes.

Q. How would you have been familiar with it before the Florida negotiations?

A. BellSouth had offered that definition or that type of definition to other carriers. We had that in multiple agreements at the time and discussions. Obviously in negotiations with carriers about that definition had raised the issue.

Q. Now, in the North Carolina deposition I asked you the question whether or not the

1 North Carolina interconnection agreement contained
2 a definition switched access arrangements and
3 your answer was I don't believe so. Do you
4 remember that?
5 A. Yes.
6 Q. I'm going to ask you the same
7 question relative to the Florida interconnection
8 agreement. Does the Florida interconnection
9 agreement contain a definition switched access
10 agreements?
11 A. Not other than in the reference in
12 5.3.1.1.
13 Q. At the time BellSouth offered AT&T
14 the definition or the language switched access
15 arrangements as established by the ruling
16 regulatory body, was there a definition of
17 ruling regulatory body which was proposed by
18 BellSouth?
19 A. I would have to check the document
20 at that time, there were definitions in the
21 general terms and conditions that some times
22 stated commission, defined commission or ruling
23 body or something to that extent, I would have
24 to check the red-line at that time, or the
25 document at that time to see.

1 Q. I want to make sure I understand
2 given what you have indicated about red-lining
3 and proposed language. Are you saying that if
4 you check the Florida agreement or if you check
5 red-line versions of the Florida agreement and
6 there was no defined definition for ruling
7 regulatory body, that that would have meant it
8 was not defined by BellSouth?
9 A. No, I didn't say that. I mean you
10 asked me if that was a definition found in the
11 document. And my answer is I don't know without
12 looking at those documents.
13 Q. Which documents would you have to
14 look at, because ruling regulatory body did not
15 end up in the contract that was actually signed
16 by the parties, did it?
17 A. No, it did not.
18 Q. So if we were going to try to find
19 whether or not you had a definition of ruling
20 regulatory body, where would we look?
21 A. We would have to see if there was a
22 document from that time period that had
23 definitions in it. There may not be and the
24 document may not exist today.
25 Q. And when you say document, are you

1 referring to a red-line version of the contract
2 or some other document?
3 A. The red-line version of the contract.
4 Q. When you became involved in the
5 interconnection negotiations with AT&T in the
6 April or May time frame, did you review AT&T's
7 arbitration petition in Florida for the
8 outstanding issues that were being arbitrated?
9 A. I don't know if I reviewed it at
10 that time or not.
11 Q. Did you subsequently review it?
12 A. I have reviewed it since that time,
13 yes.
14 Q. When was that?
15 A. I couldn't recall every time I
16 reviewed it. Obviously at the time that these
17 complaints were filed, and probably prior to
18 that in negotiating some of the other issues.
19 Q. Do you now know whether AT&T
20 arbitrated the definition of local traffic in
21 its Florida arbitration?
22 A. Not specifically worded as that.
23 Again, the parties arbitrated whether calls to
24 dial-up ISPs should be included as local or not,
25 but not specifically the issue of how local

1 traffic would be defined outside of that.
2 Q. And did the parties not also or did
3 AT&T not also arbitration what was the
4 appropriate compensation for Voice Over Internet
5 Protocols?
6 A. Yes. That was an arbitration issue.
7 Q. Were there any other issues which
8 you would say related to local traffic which
9 were arbitrated by AT&T in Florida?
10 A. The issue of point of
11 interconnection, who gets to choose the point of
12 interconnection, or phrased another way, what
13 compensation is due at the point of
14 interconnection if outside the local calling
15 area.
16 The issue was -- phrased around that
17 again, the compensation of how trunks and
18 facilities would work between the parties, those
19 were all encompassed kind of in that point of
20 interconnection issue. I would have to review
21 the arbitration matrix to see if there were any
22 others that related to local traffic.
23 Q. Well, help me understand, what did
24 point of interconnection have to do with
25 definition of local traffic?

1 A. It's tangentally related in that
2 obviously we're talking about the transport of
3 local traffic and how the parties will
4 compensate each other for the trunks and
5 facilities and who is responsible for the
6 transport to carry that local traffic.
7 Q. Are there any other issues that you
8 believe were arbitrated by AT&T that related to
9 local traffic other than calls to ISPs Voice
10 Over IP calls and point of interconnection?
11 MR. SHORE: I'm going to object to
12 the form. You can answer the question.
13 THE WITNESS: As I stated earlier, I
14 would want to review the matrix to make sure,
15 but those are all that I recall.
16 Q. (By Ms. Cecil) And just to make sure
17 I understand your role at the time, you were
18 the subject matter expert on all three of those
19 issues for BellSouth?
20 A. For negotiations purposes. There are
21 multiple people at BellSouth who are responsible
22 for the implementation and specific provisions
23 and technical issues, but for representing
24 BellSouth in negotiations for attachment 3, yes.
25 Q. Okay. Let's talk about the issue

1 regarding calls to Internet service providers,
2 how did the parties finally resolve that issue
3 in the Florida arbitration, in the Florida
4 interconnection agreement?
5 A. BellSouth and AT&T reached a
6 compromise for the region on how to handle ISP
7 traffic up to that point in time for the past
8 type disputes as well as going forward. From a
9 going forward standpoint the parties agreed to
10 compensate each other at a single rate for both
11 local and ISP bound traffic pursuant to the
12 FCC's ISP order on remand.
13 Q. The past disputes that were resolved,
14 was that done in the language of the Florida
15 interconnection agreement that we've been
16 referring to today?
17 A. No.
18 Q. How was it done, how was that
19 accomplished?
20 A. That was accomplished through a
21 settlement of past disputes.
22 Q. And that's a confidential settlement?
23 A. Yes.
24 Q. And with respect to going forward,
25 you indicated that AT&T and BellSouth agreed on

1 a single, the same rates for local and ISP
2 traffic, correct?
3 A. Correct.
4 Q. And at that time the parties also
5 agreed that ISP, even though it was going to
6 become the same rate as local traffic was not
7 local traffic, would you agree with that?
8 A. Correct.
9 Q. How did the parties resolve the
10 issue regarding Voice Over Internet Protocol
11 calls?
12 A. In a nutshell, the parties agreed to
13 disagree and put in language that said each
14 party would abide by effective and applicable
15 rules regarding that type traffic.
16 Q. And how about point of
17 interconnection, how did the parties resolve that
18 issue?
19 A. The parties agreed to a regime, I
20 guess you could say, of who gets to choose the
21 point of interconnection. Putting in place
22 certain triggers or thresholds for when
23 additional points would be established. Do you
24 want more than that? I can give you the whole
25 details.

1 Q. Go ahead, please.
2 A. Okay. Basically, and the language
3 sets this out fairly clearly, but the parties
4 get to choose, obviously, if they can mutually
5 agree to a point of interconnection, they do,
6 and if they cannot then each party picks for
7 its originated traffic for the first. And then
8 for additional connections, there are triggers.
9 I believe in the AT&T agreement the trigger is
10 eight point 9 million minutes of use for an
11 additional point of interconnection and also a
12 mileage criteria that additional points of
13 interconnection wouldn't be established more than
14 "X" miles from where an existing one already
15 existed, and I don't recall that off the top of
16 my head, it's roughly twenty to thirty miles.
17 Q. So as we've just talked, you have
18 identified at least three issues that you
19 believe tangentially related to what the parties
20 agreed to relative to local traffic. And again,
21 those would be calls to ISPs, Voice Over
22 Internet Protocols and then thirdly, point of
23 interconnection; is that correct?
24 A. Yeah. I don't know that I would
25 say the ISP issue was really -- I mean it was

1 tangentially related to local traffic in that
2 it's how one of the questions was phrased to
3 the arbitration, but it wasn't -- but that issue
4 in and of itself was more, is ISP-bound traffic,
5 local traffic or not, not so much the scope of
6 what's local.
7 Q. Well, in AT&T's arbitration petition
8 it specifically asked the Florida Commission to
9 determine that ISP traffic was local, correct?
10 A. Yes.
11 Q. And BellSouth disagreed, right?
12 A. Correct.
13 Q. All right. Now, I want to get a
14 sense of the timing when these three different
15 issues were being negotiated. Point of
16 interconnection, was it being negotiated at the
17 same time that you were negotiating regarding
18 calls to ISPs and Voice Over Internet Protocols?
19 A. I don't recall exactly. The point
20 of interconnection issue may have been resolved
21 a little prior to the resolution of the other
22 issues, I don't recall off the top of my head,
23 but they were negotiated in the same, you know,
24 two to three month time period. But point of
25 interconnection may have been resolved a little

1 sooner than Voice Over IP, I don't recall.
2 Q. Okay. Well, when you arrived on the
3 scene in April, May, all three issues were being
4 negotiated by the parties, were they not?
5 A. Yes. Again, the negotiations were
6 in the context of if the parties can mutually
7 agree, because we had already filed for
8 arbitration, so if the parties could not agree,
9 then the arbitration ruling would be what would
10 govern, but the parties were trying to mutually
11 work out a regional type agreement so that we
12 would have the same thing in all states, if
13 possible.
14 The ISP issue, from the past dispute
15 settlement standpoint was handled a little bit
16 earlier around because the FCC order came out in
17 April of 2001, so they were all being handled
18 -- or that issue was actually, the past disputes
19 was being handled a bit separately because we
20 were dealing with past disputed amounts and also
21 how we were going to handle that treatment going
22 forward. And that was obviously a very large
23 settlement which involved additional players at
24 BellSouth.
25 Q. All right. Again, I want to make

1 sure I understand the timing. When you say
2 that the ISP issue was handled a little bit
3 earlier, what time frame are you talking about?
4 A. The parties had been negotiating that
5 for quite some time, actually. I don't recall
6 when we finalized that settlement, but it was
7 around the time that the FCC's ISP order on
8 remand came out. And that was, again, handled
9 with a different group of people, not totally
10 different but with some additional players being
11 key players in that because of the past dispute.
12 Q. Okay. I guess I want to make sure,
13 and can I understand, when you say the ISP
14 negotiations, are you talking about the past
15 disputed amounts or are you talking about
16 language going forward as to how ISP traffic
17 would be compensated?
18 A. Both, actually, because when the
19 parties did the settlement on the past disputes
20 they also addressed how the parties would handle
21 that going forward. Understanding that the
22 going forward piece of that would also be
23 included in the interconnection agreement between
24 the parties.
25 Q. All right. Well, let's again, focus

1 in on the time frame. The FCC's ISP order was
2 effective April the 27th, 2001, is that not
3 correct?
4 A. Yes.
5 Q. Are you saying that the parties were
6 negotiating before that order was released
7 regarding compensation for ISP traffic?
8 A. Yes. The parties had been
9 negotiating the past disputes for quite some
10 time. I believe that we finalized that in
11 around the June 2001 time frame.
12 Q. Relative to future compensation, when
13 did the parties begin negotiating that relative
14 to ISP traffic?
15 A. Again, the overall scheme was done
16 in connection with the past dispute. If you
17 look at that settlement document it talks about
18 the past disputes as well as going forward, how
19 the parties will handle it. We had to
20 incorporate language into the interconnection
21 agreement to embody that agreement and how we
22 would do that, and that was finalized
23 afterwards, but the concept about the single
24 rate was discussed at the same time as the past
25 dispute.

1 Q. And again, was that before or after
2 April the 27th, 2001 when the FCC's ISP order
3 came out?
4 A. It was finalized, again, around, I
5 believe the June time frame, but the
6 negotiations had been ongoing.
7 Q. Okay. So when you say it was
8 finalized, what are you referring to, what is
9 the it?
10 A. The settlement, of the past disputes
11 and the agreement going forward in the
12 confidential settlement document.
13 Q. And that was in June?
14 A. I believe that was in around June,
15 2001.
16 Q. And the parties, then, on a going
17 forward basis relative to ISP traffic agreed to
18 language or started exchanging language; is that
19 correct?
20 A. I believe that the settlement
21 actually sets out the concepts and, then, yes,
22 we had to craft language to go into the
23 interconnection agreement to reflect that
24 agreement.
25 Q. Well, I guess I'm still a little

1 confused. When you say that the parties agreed
2 in June of 2001, had they agreed on language or
3 had they only agreed on concept?
4 A. They had agreed on language to go
5 into the settlement document. Or we had agreed
6 on language to go into the settlement document.
7 And then we had to agree on language to go
8 into the interconnection agreement.
9 Q. So are you saying that in June of
10 2001 that the language that was to go into the
11 interconnection agreement had been agreed to?
12 A. No. The concepts of going forward
13 and what the parties were going to do had been
14 agreed to, but we still had to craft language
15 to go into the interconnection agreement.
16 Q. And that was not done, then, as of
17 June of 2001. Is that correct?
18 A. No, it was not.
19 Q. When did the parties begin exchanging
20 language for the going forward interconnection
21 agreement on compensation for ISP traffic?
22 A. I don't recall the date we began, it
23 would have been around that same time frame.
24 Q. In June of 2001?
25 A. Or some time thereafter.

1 Q. And you believe the parties exchanged
2 language on a going forward basis beginning in
3 2001?
4 A. No. I said I don't recall, but it
5 would have been some time around there.
6 Q. Can you be more specific?
7 A. I can't, I didn't go back and review
8 when those were exchanged.
9 Q. All right. Point of interconnection,
10 I would like to make sure I understand what the
11 time frame is on those negotiations. When did
12 those begin and when did those end?
13 A. Well, again, they had begun almost,
14 I guess a year-and-a-half prior with the parties
15 negotiating that issue and then filing for
16 arbitration so that negotiations and our point
17 of interconnection spanned almost two years,
18 including the time that the arbitration was
19 filed and the hearings and the procedural,
20 procedural issues after and before the
21 commission, they were resolved -- I don't recall
22 exactly the date, but around, there's an e-mail,
23 I think, that we've produced that actually talks
24 about that around the same time frame, the July
25 time frame as we were trying to wrap up the

1 agreement for North Carolina.
2 Q. Early in July or later in July?
3 A. I don't recall.
4 Q. And that should be in the documents
5 that BellSouth has provided us in response to
6 discovery?
7 A. I believe that there was one that
8 talked about point of interconnection, yeah, or
9 if you look at the red-lines. It wouldn't have
10 been responsive to the actual request in this
11 case, it would have just been a part of the
12 same documents that had that.
13 Q. And that was in the July time frame
14 I guess is what you just said, correct?
15 A. Yes.
16 Q. Okay. Voice Over IP, when did those
17 negotiations start and when did those
18 negotiations end?
19 A. Those started and ended a little
20 later. I believe that the first time that
21 BellSouth proposed was in the mid-July time
22 frame. Again, that's in one of our production
23 of documents.
24 Q. Well, isn't it true that that was an
25 issue that AT&T had in its arbitration petition

1 over, Voice Over IP?
2 A. Yes. I'm sorry, I thought you were
3 asking me about the final negotiations. You're
4 right, that was begun at the same time all the
5 negotiations were begun, and that was filed as
6 an arbitration issue, so it had been outstanding
7 for quite some time. The first time that
8 BellSouth proposed the, quote, "compromised
9 concept" was in the mid-July time frame.
10 Q. Before mid-July, what had been
11 BellSouth's position relative to Voice Over IP?
12 A. Our position on Voice Over IP has
13 always been that Voice Over IP transmissions
14 which are, originate and terminate or where the
15 end points of the call are traditionally would
16 be accessed, and those are considered access
17 calls.
18 Q. When you say access, what do you
19 mean, what kind of access?
20 A. Typically switched access, either
21 interstate or intrastate.
22 (Shiroishi Exhibit-AT&T 1 was marked
23 for identification.)
24 MS. CECIL: Okay. Anne and
25 Patty --

1 MS. CHRISTENSEN: Yeah.
2 MS. CECIL: I've had marked as
3 AT&T's Shiroishi deposition exhibit number 1 the
4 matrix that we sent by Patty by e-mail earlier
5 today.
6 MS. CHRISTENSEN: Okay.
7 MS. CECIL: And the order that I
8 have these in, Patty, is local traffic matrix is
9 first. Switched access traffic matrix is
10 second --
11 MS. CHRISTENSEN: I'm sorry, switched
12 access traffic?
13 MS. CECIL: Yeah. It might be at
14 the back of yours.
15 MS. CHRISTENSEN: I'm not seeing it.
16 I've got the local traffic, the local traffic
17 matrix, but I don't see a switched access matrix
18 when I printed it up. I've got three pages
19 for local traffic matrix.
20 MS. CECIL: Yeah.
21 MS. CHRISTENSEN: Is that what we're
22 talking about here?
23 MS. CECIL: That's correct. You
24 should also have one for switched access traffic
25 as well as for intraLATA toll traffic.

1 MS. CHRISTENSEN: I don't have the
2 switched access and I don't have the intraLATA
3 toll. You're planning on putting all that
4 together as one composite deposition exhibit?
5 MS. CECIL: Yes.
6 MS. CHRISTENSEN: Okay. If you
7 could just e-mail or Fax that to me and then
8 we'll do it that way, I didn't get it, it
9 didn't print up on the e-mail you sent us, but
10 let me double check. All I'm seeing is local
11 traffic. Yeah, that's all I got was local
12 traffic on the attachments so I'll need the
13 other two.
14 MS. CECIL: All right.
15 MS. CHRISTENSEN: By e-mail is
16 probably just as easy.
17 MS. CECIL: We've been going about
18 an hour or an hour and ten minutes so let's
19 take just a couple of minutes break and I'm
20 going to call my office and see if we can't
21 get those e-mailed over to Patty.
22 Patty, we're just going to take a
23 couple of minutes break while we try to get
24 that to you.
25 MS. CHRISTENSEN: That will be

1 great, I'll take a break while we're at it too.
2 MS. CECIL: Okay, thanks. (Thereupon,
3 a short break was held)
4 Q. (By Ms. Cecil) I have had marked as
5 AT&T Shiroishi No. 1, the matrix that we sent
6 to Patty by e-mail earlier today.
7 A. Okay.
8 Q. And the order that I'm going to talk
9 about is local traffic, switched access and then
10 intraLATA tolls.
11 MS. CHRISTENSEN: Okay, I'm
12 altogether now.
13 Q. (By Ms. Cecil) Ms. Shiroishi, looking
14 at what we have identified as Deposition Exhibit
15 No. 1, I want to represent to you that this is
16 a matrix which I put together looking at your
17 responses to discovery filed by AT&T in this
18 proceeding. It is identical to the matrix which
19 AT&T prepared in the North Carolina proceeding
20 for its brief except for one change, and I want
21 to identify that for you. In the North
22 Carolina matrix, on page 1 of the local traffic
23 matrix we did not include the second entry
24 there, Shiroishi to Peacock, July 17, 2001 at
25 12:54 p.m. That was an oversight on my part.

1 It was discussed in the narrative
2 discussion of the matrix which I included from
3 the brief, but I wanted you to know that.
4 Would you like to take a minute and look at
5 this matrix before we talk about it, or are you
6 comfortable, have you reviewed it from the North
7 Carolina brief?
8 A. I guess you can ask the questions
9 and then if I need to take time to look at it,
10 I will.
11 Q. All right. The first entry shows
12 that there was a red-lined version of the
13 contract which you sent to Mr. Peacock on July
14 the 11th, 2001 at 6:12 p.m. And if you look
15 at section 5.3.1.1, that is the language that
16 was included in that particular version of the
17 contract. Does that look familiar to you?
18 A. I would have to go back and look at
19 the document, but I guess suffice it to say, if
20 you've taken it from there.
21 Q. All right. Let's look down --
22 MR. SHORE: Just a second, when you
23 say suffice it to say, you're not necessarily
24 agreeing, you're just saying I'll take your word
25 for it, Ms. Cecil, I just want to --

1 THE WITNESS: Right. Subject to
2 check. Subject to check.
3 Q. (By Ms. Cecil) That's fine. With
4 respect to the first sentence where it talks
5 about reciprocal compensation between the
6 parties, do you see the language there that says
7 below, switched access arrangements as
8 established by the ruling regulatory authority
9 when the originating -- I guess it should be
10 originating party has its own switch, do you see
11 that?
12 A. Yes.
13 Q. So would it be a fair statement,
14 then, that as of July the 11th, 2001 that the
15 parties were still, you were still proposing
16 ruling regulatory body as the qualifier for
17 switched access arrangements; is that correct?
18 A. Subject to checking the document,
19 yes.
20 Q. Now, down in the disagree language
21 where it says AT&T proposal and BST proposal,
22 obviously the dispute there involved how you
23 were going to compensate traffic or enhance
24 service providers or information service
25 providers. Is that correct?

A. Yes.

Q. And that's the same thing as the ISP issue that we've been talking about earlier today, is that not correct?

A. It is.

Q. All right. Let's then go down to the next entry which is --

A. Do you happen to have this July 11th document handy? I know it's in this stack.

Q. I don't have it, other than in that stack.

A. Okay.

Q. You're welcome to look at it.

A. Well, I was just wondering if there was additional language that was stricken or not that went along with this.

Well, we can come back to that if it becomes important to the discussion.

Q. That's okay, it probably would be better for you check to make sure you're comfortable with it.

A. (Witness checking document)

So are you stating that this is the first time that this language is in here or just that it was in here on July 11th?

1 Q. What I did was I took your red-lined
2 documents that you provided in discovery, and
3 this is the first time -- no, I'm not saying
4 that this is the first time that that language
5 appeared, ruling regulatory body, I'm saying that
6 on July 11th, 2001, when you sent language over
7 to Mr. Peacock, that this was the language that
8 was in there.
9 A. Okay.
10 Q. I did not make a reference that it
11 was the first time that it appeared in any
12 red-line. But again, my question was, as of July
13 the 11th, 2001, you were still proposing ruling
14 regulatory body, correct?
15 A. That's what in this document, yes.
16 MR. SHORE: When you say this
17 document, you're referring to --
18 THE WITNESS: The matrix.
19 MR. SHORE: The matrix, okay.
20 Q. (By Ms. Cecil) All right. let's move
21 to the second entry which is referencing a
22 red-line version that you sent Mr. Peacock on
23 July the 17th, 2001 at 12:54 p.m. You will
24 notice there that I have indicated Shiroishi
25 adds language that parties have agreed to

1 compensation for calls to ISPs by agreeing to
2 implement the FCC's ISP order.
3 Would you agree with me that this is
4 the first time that you showed AT&T language
5 which is reflected in 5.3.1.1?
6 A. I would have to go back and look
7 through the documents to see.
8 Q. Do you have any recollection that
9 you provided language earlier to AT&T than July
10 the 17th, 2001?
11 A. I know that we discussed the fact
12 that we were going to put in place holder
13 language. I don't know the first date that we
14 transmitted that quote "place holder language"
15 which is what this first, I guess two sentences
16 of this is.
17 Q. Well, if you had provided it earlier
18 in a red-line version, we should have received
19 that in discovery, should we have not?
20 A. Yes. If it was related to anything
21 responsive.
22 Q. Okay. Now, I believe you told me
23 earlier before we took the break that the
24 parties had agreed to how ISP traffic was going
25 to be compensated on a forward going basis in

1 the June time frame, is that not correct?
2 A. Yes. Pursuant to the settlement
3 that also settled the past dispute.
4 Q. So what happened between early June
5 when you said the parties reached agreement
6 conceptually on a going forward basis and July
7 17th when you first provide, or we allege that
8 you first provided the settlement language?
9 A. Again, the parties had agreed
10 conceptually to put in quote, "place holder
11 language" and we had discussed that. So really,
12 as you can see here, there's not much substance
13 to that other than to say that we're going to
14 incorporate the order.
15 Q. Now, this language that is shown
16 here in 5.3.1.1 relative to implementing the
17 FCC's order, was that your language or was that
18 AT&T's language?
19 A. I don't recall, I would have to go
20 back and look. It could have been the result
21 of a discussion that the parties had and then
22 BellSouth putting that into a document to send
23 back to AT&T.
24 I do recall that our lawyers were
25 involved more so on this since it was

1 conceptually more place holder language. And I
2 believe Roxanne Douglas at AT&T as well as
3 Michael Karno were involved as well.
4 Q. All right. So if you continue to
5 look down that paragraph you eventually get to
6 the sentence that says, additionally, the parties
7 agree, do you see that at the very bottom of
8 page 1?
9 A. Yes.
10 Q. And that's the LATAwide local concept
11 language that's at issue in this dispute, would
12 you not agree?
13 A. Yes.
14 Q. And if you go to the end of that
15 sentence there's still the language ruling
16 regulatory body, do you see that?
17 A. Yes.
18 Q. Now, in the next paragraph, this
19 appears to marked out language, do you see that,
20 for reciprocal compensation between the parties,
21 do you see that?
22 A. Yes.
23 Q. Would it have been your process to
24 mark through the language once you have proposed
25 new language or would you only mark through

1 language once it had been agreed to by the
2 parties?
3 A. No. We would not accept the change,
4 which would mean this would disappear until the
5 other party had agreed to it, but it would be
6 acceptable to show it as stricken with
7 replacement language as a proposal to reflect to
8 the other party here's the change that was made.
9 Q. So was that always the case whenever
10 you were proposing substitutive language, that
11 you would put in the substitutive language and
12 then you would strike through the language it
13 was being substituted for?
14 A. It's hard for me to answer that
15 without looking at exactly the issue. Again, I
16 talked earlier about the case of in one instance
17 the parties were going to substantive a phrase
18 throughout the attachment, but prior to us doing
19 that, because it would have resulted in such,
20 just visually difficult to read red-lines, that
21 we waited for AT&T to give us that okay before
22 we did that. So in that e-mail you would see
23 something like, you know, I'm going to wait to
24 make this change until you all have decided, or
25 something to that effect.

1 But typically there would be some
2 type of indication, be it verbal in an e-mail
3 or something that said this would be replaced
4 with this or something to that extent.
5 Q. Well, looking at this example that
6 we're talking about for 5.3.1.1 on July the
7 17th, why would you say that that language was
8 struck through, where it says for reciprocal
9 compensation between the parties, et cetera?
10 A. Potentially at that point, because
11 the parties were agreeing to the place holder
12 language and how local traffic, I guess the
13 parties agreed or the proposal was to put in
14 this language at the bottom. The language
15 itself as far as the last sentence of the
16 nonstricken language and the first sentence of
17 the stricken language has the same concept which
18 is, any telephone call that originates or
19 terminates in the same LATA except for those
20 calls that are originated or terminated through
21 switched access arrangement, so you wouldn't need
22 both.
23 Q. So I mean are you saying, then, that
24 AT&T had already agreed to the language you
25 inserted on July the 17th, and that was the

1 reason that you had struck through the language
2 in the paragraph that appears to be struck
3 through?
4 A. Most probably the parties had had a
5 call or a discussion where they conceptually
6 talked about here's what we're going to do and
7 then I reflected it in a red-line for their
8 agreement, but I don't know that from looking at
9 this.
10 Q. Well, are you saying then, that on
11 July the 17th, 2001 that AT&T had agreed to the
12 language ruling regulatory body?
13 A. Well, I guess that depends on how
14 you define agreed to. At that point they had
15 not offered a counter proposal to the language,
16 but this was by no means a final document, this
17 was a, you know, a document that was being
18 negotiated, but at that point in time AT&T had
19 not offered a counter proposal to that phrase.
20 Q. Now, relative to the language that
21 starts at the bottom of page 1 which we were
22 just discussing, additionally the parties agree
23 to apply a LATAwide local concept. That
24 paragraph, when did you first propose that to
25 AT&T?

1 A. The additionally sentence?
2 Q. Yes.
3 A. I would have to go back through the
4 documents and see, it looks from your matrix as
5 though that was July 17th, but, again, I would
6 have to go back and look at the documents to
7 see.
8 Q. Did you not testify in North
9 Carolina and in your discovery responses that
10 you provided that language first to AT&T on May
11 the 22nd?
12 A. I believe that I testified that I
13 proposed the definition of local traffic, which
14 was the same as is in the July 17th and May
15 22nd which is that any telephone call that
16 originates or terminates in the same LATA except
17 for those calls that are originated or
18 terminated through switched access arrangements
19 as established by the ruling regulatory body.
20 Q. That's my point, in previous
21 depositions and before the North Carolina
22 Commission you testified this additionally
23 language which ends with ruling regulatory body
24 was proposed to AT&T on May the 22nd, isn't
25 that correct?

1 A. I would have to look at the
2 transcript, if you would like to point me to
3 that, I can.
4 The language of defining local
5 traffic as any telephone call that originates or
6 terminates in the LATA except for those calls
7 that originate or terminate through switched
8 access arrangements as established by the ruling
9 regulatory body was transmitted to AT&T on May,
10 around or about May 22nd, and that was produced
11 -- actually it's the one I had just turned to,
12 in this proceeding as well as the North Carolina
13 proceeding, and it's covered or has a cover
14 sheet with an e-mail in the May time frame.
15 Q. Okay. So are you saying now you
16 agree that you provided that additionally the
17 parties agree which ends with the ruling
18 regulatory body, that was May the 22nd or do
19 you need to check documents to confirm that?
20 A. The additionally the parties agree, I
21 would have to look at. The concept or the
22 definition of local traffic which did not change
23 between the two versions was proposed on May
24 22nd.
25 Q. All right, read for me what you

1 believe was proposed on May 22nd.
2 A. Can I just point to that document?
3 Q. Sure.
4 A. This is the June 12th -- let me
5 find the May. In the production of documents,
6 that's labeled 2, 3 and 22, there's a 5/22
7 version that says local traffic is defined as
8 any telephone call that originates and terminates
9 in the same LATA except for those calls that
10 are originated or terminated through switched
11 access arrangements as established by the ruling
12 regulatory body. And then in brackets it states
13 when the originating party has its own switch.
14 Q. So with respect to the language
15 switched access arrangements as established by
16 the ruling regulatory body, that had been
17 provided to AT&T on May the 22nd?
18 A. Again, the document is dated May
19 22nd, I don't know the exact date that it was
20 transmitted to AT&T, but it was around that time
21 frame.
22 Q. And as of July the 17th the language
23 is remaining ruling regulatory body, do you
24 agree with that --
25 A. Yes.

1 Q. -- by virtue of this.
2 What happened in that interim time
3 frame from May the 22nd relative to July the
4 17th regarding the language, ruling regulatory
5 body?
6 A. I'm not sure what you're asking me.
7 Q. Did AT&T discuss that language,
8 ruling regulatory body with you or anybody else
9 from BellSouth between May the 22nd and July the
10 17th?
11 A. We had discussions around the
12 definition, this definition, proposed definition
13 and what it meant. I don't know if prior to
14 that date, prior to July 17th and 18th time
15 frame if we discussed the phrase ruling
16 regulatory body, but we had discussions around
17 this definition.
18 Q. So you're saying you don't remember
19 if AT&T provided you or discussed with you what
20 was meant by ruling regulatory body before July
21 the 17th?
22 A. I don't recall that specifically.
23 Q. So the discussions that you referred
24 to in your testimony, what were those
25 discussions about, because you've told me you

1 don't remember if it's ruling regulatory body?
2 A. We had discussions about what the
3 definition of local traffic would be under this
4 concept and how that would work, what would be
5 local, what would not be local.
6 Q. What do you mean by concept?
7 A. Again, what would be local, what
8 would not be local.
9 Q. Did you discuss switched access
10 arrangements at that time?
11 A. Again, we discussed what would be
12 considered local and the exclusion of what would
13 not be considered local. So, yes, we would
14 have talked about switched access arrangements,
15 whether we defined that term or not, I don't
16 recall.
17 Q. Well, what did you advise AT&T as to
18 what would be considered local in the context of
19 this language?
20 A. Anything that originated or terminated
21 in the LATA unless it originated or terminated
22 through a switched access arrangement.
23 Q. And what was the discussion around
24 switched access arrangements?
25 A. I don't recall specifically other

1 than what I testified to in North Carolina.
2 Q. Well, what do you think you
3 testified to in North Carolina?
4 A. We can pull from the transcript. I
5 mean, basically that the parties talked about
6 how the routing of the traffic would work and
7 that what would be local and what would not.
8 Q. Well, how would the routing work?
9 A. Explain that to me.
10 Q. How would the routing work?
11 A. The fact that if it was originated
12 or terminated through switched access
13 arrangements it would not be local.
14 Q. And that's all you told AT&T?
15 A. Again, I'm not testifying that that's
16 every conversation we had. To my recollection,
17 we talked about that. And that's --
18 Q. Okay. I don't mean to interrupt but
19 I think you --
20 MR. SHORE: Did you finish?
21 THE WITNESS: Yes.
22 Q. (By Mr. Cecil) -- I think in your
23 testimony you have indicated you had extensive
24 discussions around what the language switched
25 access arrangements meant, did you not?

1 A. Well, we had discussions around the
2 definition and around how this definition would,
3 again, say what was and was not local, yes.
4 But I'm not sure exactly what you're asking me
5 as to what was or wasn't said.
6 Q. Well, when you say definition, what
7 are you talking about, the definition of local
8 traffic or the definition of what constitutes a
9 switched access arrangement?
10 A. The definition of local traffic.
11 Q. Which was anything in the LATA
12 except for whatever was terminated through a
13 switched access arrangement?
14 A. Originated or terminated.
15 Q. And are you saying that you did not
16 have discussions with AT&T about what switched
17 access arrangements meant?
18 A. We obviously had to use that phrase
19 and talked in context of using that as its in
20 the language here. I do not recall us
21 specifically, quote, "defining that term".
22 Q. All right. You have also testified
23 both in North Carolina and here in Florida that
24 there were diagrams that were drawn by the
25 parties relative to the definition of local

1 traffic, do you remember that?
2 A. Yes.
3 Q. When was those diagrams drawn?
4 A. Again, we had discussions around this
5 definition in different meetings, and I believe
6 we provided those dates in the production of
7 documents, but there were meetings in the July,
8 late June, July time frame where we talked about
9 the issues.
10 Q. And what were on the diagrams?
11 A. We talked about -- if you read this
12 definition it basically says that the way that a
13 call is going to be treated for intercarrier
14 compensation purposes is there's kind of two
15 criteria. First it must originate and terminate
16 in the LATA to be considered local, and then
17 second it must not be routed or originated or
18 terminated through switched access arrangement.
19 So you would have a call that
20 originates or terminates in the LATA and does
21 route over or is originated or terminated to the
22 switched access arrangement, that would not be
23 considered local. Then you have a call that's
24 originated and terminated in the LATA and it's
25 traversed or routed through a nonswitched access

1 trunk group which in the industry is called a
2 local toll type trunk group, and that will be
3 considered local. So that's what the diagrams
4 would have been around.
5 Q. So the diagrams would have shown
6 some sort of circle representing the LATA, is
7 that correct?
8 A. I don't know if there would have
9 been a mark for the LATA or not, but the
10 originating terminating points obviously are in
11 the routing.
12 Q. That was drawn on the diagram?
13 A. Yes.
14 Q. And who drew the diagram?
15 A. I would have drawn the diagram.
16 Q. And you don't have those diagrams
17 today, do you?
18 A. No. Those were drawn on either an
19 easle or a whiteboard.
20 Q. Okay. Now, you say that this was
21 discussed in the June time frame?
22 A. Late June, perhaps, there may have
23 been some earlier June meetings. Again, we gave
24 you those dates in the production of documents.
25 Q. And as I recall that's also the same

1 time frame that you indicated that the parties
2 were also negotiating point of interconnection,
3 is that not correct?
4 A. Yes, we were.
5 Q. And the parties certainly drew
6 diagrams, lots of diagrams regarding point of
7 interconnection, did they not?
8 A. Yes, we did.
9 Q. Okay. Let's go down to the next
10 entry on the matrix, Shiroishi Peacock, July the
11 18th, 2001. And you will see that there is a
12 notation at the bottom Shiroishi changes ruling
13 regulatory body to State Commission or FCC. Do
14 you see that?
15 A. Yes.
16 Q. Would you accept, subject to check,
17 that that is when the change was made in the
18 red-line version from ruling regulatory body to
19 State Commission FCC?
20 A. Again, subject to checking the
21 document.
22 Q. Now, what happened between July the
23 17th at 12:54 p.m. and July the 18th at 7:27
24 to have you change that language?
25 A. My recollection is that the parties

1 actually had a conference call the night prior
2 to me making that change in the red-line where
3 we discussed what was meant by quote "ruling
4 regulatory body", and AT&T requested the change
5 to State Commission or FCC. And I believe that
6 the e-mail transmitting this red-line references
7 that and says the change is made as a result
8 of last night's call because it was held that
9 night at around, I believe six or seven, it was
10 fairly late on the 17th, are reflected in the
11 document.
12 Q. So are you saying that there was
13 only one discussion between AT&T and BellSouth
14 about changing ruling regulatory body to State
15 Commission or FCC and it was on a conference
16 call on July the 17th, 2001?
17 A. I'm not sure if that was the only
18 discussion, there was a discussion that night.
19 We could have discussed it prior, I don't
20 recall, but I do know that I do recall
21 discussing it prior to this change being made
22 and that it was at the request of AT&T and
23 that the subsequent document then reflected that.
24 Q. Why did AT&T say it wanted to make
25 this change?

A. I'm sorry, I was trying to see the e-mail to see if I had that. To my recollection AT&T was asking what was meant by quote "ruling regulatory body". And when we explained, or I explained that that was the term that was used to define either the State Commission for intrastate or the FCC for interstate then Bill said then why don't we just say that, so we made that change.

Q. And that was it, no further discussion?

A. That's all I recall about that particular issue on that conference call.

Q. Now, I assume that you have read Mr. Peacock's rebuttal testimony in the Florida proceeding?

A. Yes.

Q. And you're familiar with his testimony that ruling regulatory body was discussed in the context of compensation for ISP traffic as well as Voice Over IP Traffic, are you familiar with that?

A. I would want to look at the particular section of his testimony if you're going to ask me a question on it.

1 Q. Ms. Shiroishi, I assume you don't
2 have a copy of Mr. Peacock's testimony there?
3 A. No, I do not.
4 MS. CECIL: Patty, I'm going to show
5 her Mr. Peacock's rebuttal testimony in Florida,
6 and I'm on page 16.
7 MS. CHRISTENSEN: That's fine.
8 Q. (By Ms. Cecil) And I ask you to
9 review Mr. Peacock's testimony beginning at line
10 17 on page 16 going through line 10 on page
11 17.
12 A. (Witness complies.)
13 Q. Now, Ms. Shiroishi, in reviewing Mr.
14 Peacock's testimony he stated there that when
15 you first presented the language switched access
16 arrangements as established by that you first
17 proposed ruling regulatory body, do you remember
18 that?
19 A. Yes.
20 Q. And then he said that that was
21 changed to mean as established by the State
22 Commission or FCC. Do you remember that?
23 A. Yes.
24 Q. And he went on to say the
25 discussions regarding BellSouth's proposed

1 language were framed by the arbitration issues
2 that remained unresolved. These discussions did
3 not include any modification to include intraLATA
4 traffic and local traffic. AT&T's understanding
5 of BellSouth's proposed language that it was
6 needed to prevent either AT&T or another
7 competing local provider which opted into or
8 adopted that language under Section 252(I) of
9 the Act from representing that ISP traffic and
10 voice calls constituted local traffic for
11 purposes of applying local receptacle
12 compensation.
13 That's what he said in his
14 testimony.
15 Now, are you saying that Mr. Peacock
16 never told you that regarding the discussions,
17 regulatory ruling body?
18 A. Ruling regulatory body, that phrase?
19 Q. (Um-hum)
20 A. We did not have discussions around
21 that issue. The discussion around BellSouth and
22 252(I) did come up in the context of the
23 switched access traffic definition and the
24 sentence that says this is interrelated. But
25 the discussion around except for those calls

1 that are originated or terminated through
2 switched access arrangements as established by
3 the ruling regulatory body being something that
4 BellSouth needed protection or providing
5 protection to BellSouth against ISP traffic or
6 Voice Over IP, no, that is not something that
7 we discussed.
8 I can't speak to what Mr. Peacock
9 understood or his intent, but I can tell you
10 that, very clearly, was not my intent.
11 And I think I told you this in
12 North Carolina, it took me quite a while when I
13 read the testimony to understand what that
14 argument was, because that is not something that
15 we've ever presented as to why we needed this
16 exclusion or exception in this contract or any
17 other contract. That exception or exclusion has
18 always been there to exclude traffic that is
19 originated or terminated through switched access
20 arrangements.
21 Q. So from your perspective what Mr.
22 Peacock has testified to in the paragraph we've
23 just looked at in his Florida rebuttal testimony
24 is not accurate; is that correct?
25 A. Again, I can't speak to what Mr.

1 Peacock understood or his intent, I can tell you
2 that that is not something that BellSouth would
3 have stated about that phrase because that isn't
4 why that phrase is put there. And again, when
5 I read AT&T's testimony on that issue I had to
6 read it about seven times before I understood
7 what the argument was trying to say because
8 that's not something that anyone at BellSouth
9 has ever stated or said was the purpose for
10 that exclusion or exception.
11 Q. Well, clearly you don't dispute that
12 at least on this conference call on July the
13 17th, 2001 that AT&T had concerns about the
14 language ruling regulatory body because they
15 asked to change it, did they not?
16 A. Right. Again, in the context of
17 AT&T asking what does ruling regulatory body
18 mean, our answer being it means the ruling
19 regulatory body that has jurisdiction over
20 whatever switched access arrangements we're
21 talking about, either intrastate for the -- I'm
22 sorry, either the State Commission for the
23 intrastate or the FCC for the interstate and the
24 suggestion being made, well, then if that's what
25 we're trying to say, let's just say State

1 Commission or FCC.
2 Q. Well, relative to the definition of
3 local traffic as you have just described it
4 where the parties adopted a LATAwide local
5 concept except for traffic terminated over
6 switched access arrangements as decided by the
7 State Commission or FCC --
8 MR. SHORE: Or originated.
9 MS. CECIL: I'm sorry. Or
10 originated.
11 Q. (By Ms. Cecil) Once you agreed to
12 that, or once AT&T and BellSouth agreed to that
13 concept, that language, you really didn't need
14 to have any definition switched access traffic
15 in the agreement to accommodate anything, did
16 you, relative to local traffic?
17 A. I'm sorry, will you ask me that
18 again, once we agreed to the exclusion --
19 Q. Yeah. Once you agreed to this
20 LATAwide local concept and you said, you know,
21 it's basically local traffic is going to be
22 whatever is in the LATA except for what is
23 originated or terminated over switched access
24 arrangements as established by the State
25 Commission or the FCC, you didn't need any

1 definition of switched access traffic at that
2 point in time, did you?
3 A. Not for the purposes of the local
4 traffic definition, no.
5 Q. In deciding what was going to be
6 local and what was not going to be local,
7 correct?
8 A. Correct.
9 Q. Because it was all encompassed in
10 this language that we just looked at, right?
11 A. Right.
12 Q. All right. Let's go down, then, to
13 the next entry on the matrix. Peacock to
14 Shiroishi July the 19th, 2001, 2:21 in the
15 morning. And at that point in time you'll see
16 that I have made a reference that Mr. Peacock
17 added the underlying sentences, do you see that?
18 A. Yes.
19 Q. Subject to check, is that consistent
20 with your recollection?
21 A. Subject to check, yes.
22 Q. Now, if the parties had already
23 agreed on how they were going to treat ISP
24 traffic and there was no discussion about ISP
25 traffic related to protection under ruling

1 regulatory body, why would Mr. Peacock, if you
2 know, if he ever explained, want to add this
3 particular language?
4 MR. SHORE: If I could just object
5 to the form of that question, did he ever
6 explain. Subject to foundation, I think that
7 might give us a more accurate record.
8 MS. CECIL: All right, fair enough.
9 Q. (By Ms. Cecil) Ms. Shiroishi, to the
10 best of your recollection, Mr. Peacock did
11 propose this language, did he not?
12 A. It looks that way from the red-line,
13 yes.
14 Q. And as of July the 17th or -- I'm
15 sorry, July the 19th, I think you previously
16 testified the parties had agreed on how they
17 were going to compensate each other for ISP
18 traffic, both past traffic and future traffic,
19 right?
20 A. Correct.
21 Q. Now, when Mr. Peacock sent you this
22 language, did he explain to you why he was
23 proposing it?
24 A. I don't recall if Mr. Peacock did.
25 We did have discussions with AT&T, and it may

1 have been the lawyers at AT&T because there was
2 some concern. And I would have to go back and
3 look through, it's probably in the context of
4 the ISP settlement and not this particular
5 dispute around certain dates.
6 For instance, the settlement that we
7 talked about previously settled all claims
8 through a date certain. And then I think there
9 was some concern on AT&T's part about how the
10 traffic would be handled from that date to the
11 date that we got the amendment executed. And
12 so my recollection is that AT&T wanted some
13 language to address that particular issue, it
14 would have only been several months, but some
15 gap there.
16 Again, I believe that our lawyers
17 actually worked that out, but my recollection is
18 that that's why that was put there because there
19 was a concern about the settlement release date
20 and then from that point to getting the
21 amendment finalized and executed.
22 Q. Well, clearly to the extent that Mr.
23 Peacock added this language in as it appears
24 that he did, your earlier statement that the
25 parties had agreed as of early June on

1 compensation for ISP traffic, both past traffic
2 and future traffic, there were still some
3 negotiations going on, were there not?
4 A. Just, you know, like I said, that
5 was a concern of AT&T's, but in the end it
6 looks like the language did not go into the
7 final document. And so obviously, I don't recall
8 again without going back to the settlement
9 discussion notes and seeing what happened there,
10 it doesn't look like it was an issue that
11 stayed a concern.
12 Q. But, you know, clearly as of July
13 the 19th Mr. Peacock, at least, was still
14 concerned about some aspects of ISP traffic and
15 how it was going to be compensated, correct?
16 A. For a, looks like for a specified
17 time period.
18 Q. And in that time period, it would
19 have also been the time period that the parties
20 were discussing the meaning of ruling regulatory
21 body, isn't that correct?
22 A. It looks like that had already been
23 changed and did not change again, that that was
24 finalized on July 18th at 7:27.
25 Q. And then the language in the last

1 entry here, Shiroishi to Peacock, July the 19th,
2 2001, you'll see that I made a reference that
3 you deleted, the sentence says previously added
4 by Mr. Peacock. Do you see that?
5 A. Yes.
6 Q. And this is the final language that
7 was agreed to between AT&T and BellSouth for
8 Florida, is that not correct?
9 A. Subject to check, I would want to
10 look and see.
11 Q. Well, is it your position that
12 relative to the Florida interconnection agreement
13 that there were further negotiations regarding
14 paragraph 5.3.1.1 after July the 19th, 2001 at
15 9:59 a.m.?
16 A. We did have discussions, I don't
17 believe that the language changed, but the
18 parties did have discussion because the Florida
19 agreement was not signed until October of 2001.
20 And actually, prior to the signing of that
21 agreement we realized that we had a dispute on
22 this issue and so, yes, we had fairly
23 substantial discussions about how the parties
24 were going to handle that knowing at that time
25 that they had a dispute whereas in North

1 Carolina the document was actually signed prior
2 to the discovery of the dispute.
3 Q. But my question is for Florida, was
4 this the agreed upon language or was it still
5 being negotiated up until October the 26th?
6 A. Again, I would want to check word
7 for word to see if this is what was put in.
8 The parties continued to discuss it, but it is
9 very likely that -- or the language conceptually
10 did not change because that's how the parties
11 agreed to handle it was just to go ahead and
12 leave the language as is even though we knew we
13 had a dispute.
14 But there were discussions that
15 addressed this issue, particularly between our
16 legal departments about how to handle this now
17 that we knew we had a dispute prior to the
18 filing.
19 Q. Well, obviously it's going to be
20 important to this proceeding to understand, are
21 you saying that this language that I'm
22 reflecting that you sent to Mr. Peacock on July
23 the 19th, 2001 at 9:59, was it the final
24 agreement or was it not the final agreement on
25 this language?

1 MR. SHORE: Do you want to know is
2 that the language in the matrix that appears in
3 the final agreement, is that what you're asking?
4 MS. CECIL: Yes.
5 THE WITNESS: And subject to check,
6 it could be, but I want to make clear on the
7 record that the parties did continue to discuss
8 it. We ultimately decided to stay with the
9 same language, but we did continue to have
10 discussions about this.
11 Q. (By Ms. Cecil) Okay. They discussed
12 what had previously been agreed to, is that what
13 you're saying?
14 A. Yes. We discussed how to handle the
15 fact that we now knew we had a dispute on what
16 the definition of local traffic was.
17 Q. That the parties had already agreed
18 to for purposes of Florida?
19 A. Of North Carolina.
20 Q. Well, when did you finally agree for
21 Florida?
22 A. I don't recall, we would have to go
23 back and look. I mean, the parties -- again,
24 this was handled as a regional type discussion.
25 We finalized and signed the North Carolina

1 agreement around this time frame, if not on this
2 day, July 19th.
3 Subsequent to that, in negotiating
4 the amendments that are called for here, the
5 parties realized they had a dispute on what that
6 definition of local traffic was, so prior to
7 signing the Florida agreement we had multiple
8 discussions on how to handle that issue. What
9 the parties ultimately decided to do was stick
10 with the same language and not modify it. So
11 you will see the same language in the
12 agreements, or substantially similar. There could
13 be, again, I don't want to check for
14 typographical or grammatical type changes, but
15 there were continued discussions around it in
16 the context of what this dispute is.
17 Q. Well, let me ask it a different way,
18 the Florida interconnection agreement was signed
19 on October the 26th?
20 A. Yes.
21 Q. Are you taking the position that the
22 parties continued to negotiate the language
23 that's in 5.3.1.1 up until October the 26th?
24 A. The parties negotiated the language
25 that you see in the final agreement, and the

1 parties then had subsequent discussions about how
2 to handle the fact that we knew we had a
3 dispute.
4 And the parties, at one point I
5 believe AT&T proposed in an e-mail to BellSouth,
6 you know, how better, or a discussion to
7 BellSouth how they would like to change those
8 definitions and we talked about it.
9 In fact, there are e-mails that we
10 produced from Lea Cooper to Michael Karno that
11 discuss the fact that we have different
12 positions on this issue.
13 The parties ultimately decided to
14 stick with the same language for filing the
15 agreement, so I think to give you an answer
16 that is yes or no would be me making a
17 characterization of how you define negotiate.
18 We continued to have substantial discussions on
19 the issue in the context of the fact that we
20 knew at that point we had a dispute.
21 Q. Well, up until October the 26th,
22 could either party have changed their position
23 on the language that we're showing here in
24 5.3.1.1 that you sent to Peacock on July the
25 19th, 2001 at 9:59 a.m.?

1 A. For the State of Florida?
2 Q. Yes.
3 A. Certainly. At that point the
4 agreement was not signed. I mean we
5 contemplated filing best of finals with the
6 Florida Commission because we knew we had a
7 disagreement, but the parties ultimately decided
8 not to do that and go forward with the
9 language. But until an agreement is signed --
10 you know, nothing is -- unless you have a
11 signed document that says I will use this or
12 not use this, it's not a final interconnection
13 agreement.
14 And I believe that if it was in
15 October 26th that we would had to file it with
16 the Florida Commission, it was very soon
17 thereafter. But AT&T, I guess at that point,
18 or BellSouth could have taken the position, we
19 know we have a dispute, we're not going to sign
20 this. And that was something the parties
21 discussed.
22 Q. And AT&T told you before October the
23 26th that we disagree with your interpretation
24 of the language, isn't that correct?
25 A. I believe that the e-mails -- again,

1 I would want to check the dates, they were in
2 October and I believe they were probably from
3 both parties.
4 Q. Do you know who started the e-mail
5 traffic on that?
6 A. I don't know who sent it first.
7 Obviously the parties realized they had a
8 dispute to prompt that.
9 Q. Well, and again, this is the last
10 time I'm going to ask the question because I'm
11 just trying to get clarification on it, is it
12 your position that on July the 19th, 2001 the
13 parties had agreed to this language?
14 A. Is that the entire question?
15 Q. Yes.
16 A. I'm sorry, would you say it again?
17 MR. SHORE: I want to object to the
18 extent that she's been asked and answered that a
19 couple of times now. You can rephrase it and
20 I'll just have the same objection in a moment.
21 THE WITNESS: Will you ask me again,
22 I'm sorry?
23 Q. (By Ms. Cecil) Is it your position
24 that on July the 19th, 2001, the parties had
25 agreed to the language that appears on this

1 matrix as the last entry for 5.3.1.1?
2 MR. SHORE: Same objection. Certainly
3 answer it to the extent you have got something
4 to add that you haven't testified to previously.
5 THE WITNESS: Subject to the check
6 that this is the language, yes, this is the
7 language the parties agreed to. My earlier
8 verbose discussion, I guess, was around the fact
9 that the parties continued to discuss the issue
10 in the context of Florida.
11 Q. (By Ms. Cecil) All right. Let's
12 move to the next matrix which is the switched
13 access traffic matrix.
14 A. (Witness complies.)
15 Q. In my review of the red-line
16 agreements which you provided shows that the
17 first time you proposed a definition of switched
18 access traffic, at least in writing was on July
19 the 11th, 2001 at 6:21 p.m.
20 A. Subject to check, yes.
21 Q. Now, let's look at the first
22 sentence, it says, Switched Access Traffic is
23 defined as telephone calls requiring local
24 transmission or switching services for the
25 purpose of the origination or termination of

1 Telephone Toll Service.
2 MR. SHORE: Let me ask a question
3 for clarification.
4 MS. CECIL: Sure.
5 MR. SHORE: In the local traffic
6 matrix we just talked about and the intraLATA
7 toll traffic matrix, which I guess we're going
8 to get to, there is an additional column in the
9 middle that references the paragraph number in
10 the connection agreement. And you don't have
11 that in your switched access traffic matrix. And
12 I just want the record to be clear, those come
13 under a different paragraph than either of the
14 two other matrixes, it's different language, a
15 different provision. And I --
16 MS. CECIL: That's correct. Why
17 don't we just write on this document that this
18 is paragraph 5.3.3.
19 THE WITNESS: Do you want me to
20 write on her version?
21 MS. CECIL: Yeah. That would be
22 great.
23 THE WITNESS: That's four all
24 versions?
25 MS. CECIL: Yes. I'm glad you

1 pointed the out and we will try to clean that
2 up before we leave. (Discussion ensued off the
3 record.)
4 Q. (By Ms. Cecil) All right. The first
5 sentence there, you see the terminology of the
6 term Telephone Toll Service?
7 A. Yes.
8 Q. And that's a capitalized term,
9 telephone, capital T; capital T, toll; capital
10 S, service; correct?
11 A. Yes.
12 Q. Do you know whether there was ever a
13 definition for Telephone Toll Service?
14 A. I do not know.
15 Q. Well, you proposed the language, what
16 did you think Telephone Toll Service meant at
17 the time that you proposed it on July the 11th?
18 A. Telephone Toll Service in the
19 industry means telephone service that's offered
20 for purchase for a price to the public.
21 Q. So it's toll, it's a toll?
22 A. Yes. Traditionally, the use of the
23 word toll, meaning for purchase over and above
24 your local type service.
25 Q. Okay. And what kind of toll would

1 that be intraLATA, interLATA?
2 A. It can include both.
3 Q. It would include both?
4 A. It can. Typically in the industry
5 -- it depends on how you're using those phrases.
6 Some people think of toll as strictly an
7 intraLATA type offering or an intrastate type
8 offering, but there are times when it is defined
9 to include interstate as well.
10 Q. Well, when you proposed this
11 definition of Switched Access Traffic, by virtue
12 of using, as you've just defined the Telephone
13 Toll Service, that contradicted the definition of
14 Local Traffic that we've just talked about in
15 the Local Traffic Matrix, right?
16 A. No.
17 Q. Well, as I understood what you said,
18 Local Traffic from the Local Traffic Matrix
19 would have been -- Local Traffic would have been
20 anything within the LATA except what had been
21 exchanged over a switched access arrangement as
22 established by the State Commission and the FCC,
23 correct?
24 A. Correct. I actually wasn't listening
25 very closely, but assuming you read it

1 correctly, yes.
2 Q. Well, Telephone Toll Traffic, the way
3 that you just described it, would include
4 everything that would be toll within the LATA,
5 correct?
6 A. Well, again, I think the problem
7 that I'm having is that the Switched Access
8 Traffic definition is not linked to the local
9 traffic definition. This is giving a definition
10 of what Switched Access Traffic as a capitalized
11 term means.
12 Q. But they contradict each other?
13 A. No, not necessarily, because you
14 would have your Local Traffic definition that
15 would govern for intercarrier compensation or
16 reciprocal compensation purposes between the
17 parties, how we were going to compensate for
18 that. And your Switched Access Traffic
19 definition, which talked about Switched Access
20 Traffic and then dealt with Voice Over IP
21 Traffic.
22 Q. But in the definition of Local
23 Traffic the parties agreed to adopt a LATAwide
24 local concept except for the exception, and the
25 exception was limited to switched access

1 arrangements?
2 A. (Moving head up and down.)
3 Q. And switched access arrangements, as
4 you testified, you meant to mean switched access
5 trunks under your switched access tariffs?
6 A. Well, switched access arrangements, I
7 wouldn't agree to limit it to quote, "trunks", I
8 would agree to limit it to trunk groups or
9 trunks and facilities because that's what
10 arrangements are, but not just trunks. Trunks
11 are just channels.
12 Q. My point remains that Telephone Toll
13 Traffic, as you've described it here today,
14 includes all intraLATA toll traffic, correct?
15 MR. SHORE: I'm going to object to
16 the extent she's answered this question twice
17 now.
18 THE WITNESS: Yeah. I mean, again,
19 Telephone Toll Service is defined in the
20 industry. I believe if you look at Newton's
21 it's defined one way. I believe in the Act
22 it's defined a different way.
23 Q. (By Ms. Cecil) Well, how were you
24 defining it here, it was your term?
25 MR. SHORE: Same objection. She's

1 answered this question already. You don't need
2 to answer it again, you've answered it.
3 THE WITNESS: I've answered that
4 question.
5 Q. (By Ms. Cecil) All right. Tell me
6 how does the definition Switched Access Traffic
7 not contradict the definition of Local Traffic,
8 which the parties had agreed to?
9 MR. SHORE: Same objection. Why
10 don't you explain it one time more, but same
11 objection, she's answered this at least once.
12 MS. CECIL: What was the answer? Can
13 we have the court reporter read the answer back,
14 because I don't think I got an answer to that
15 question.
16 MR. SHORE: I understand you don't
17 like the answer because she disagreed with you
18 but she did answer it.
19 MS. CECIL: I just want to make
20 sure. If we have an answer, Andrew, I won't
21 ask it again but --
22 (Thereupon, the designated portion was
23 read back by the court reporter)
24 MR. SHORE: Read the question -- the
25 question that was pending that I objected to and

1 I said I was going to let her answer it, but
2 she already answered it, can you read that back,
3 the very last question Ms. Cecil asked her that
4 I objected to?
5 Don't worry about it. It was asking
6 her about whether or not it's inconsistent or
7 not. And I said she answered it at least
8 once. And as you read it back she's, in fact,
9 answered it twice, so she said no twice.
10 And as I said at the outset, if you
11 want to answer that again, go right ahead, but
12 after this, I won't allow her to answer it more
13 than three times, at least for this question.
14 Q. (By Ms. Cecil) Ms. Shiroishi, your
15 testimony is there is not an inconsistency
16 between your proposed definition of Switched
17 Access Traffic on July the 11th, 2001, with the
18 definition of Local Traffic that the parties
19 have been negotiating, is that correct?
20 A. Correct.
21 Q. And it's not inconsistent because the
22 definition of Switched Access Traffic is not, as
23 you say, linked to the definition of Local
24 Traffic?
25 A. Right. If you look at the

1 definition of Local Traffic that the parties
2 negotiated and subsequently agreed to, it
3 excludes anything that -- it's anything that
4 originates and terminates in a LATA with an
5 exclusion for anything that originates or
6 terminates over switched access arrangements.
7 And that, by itself, stands alone as you said
8 earlier.
9 Q. Okay. Let's move down and look at
10 the other definitions of Switched Access Traffic
11 that you proposed. Peacock to Shiroishi, July
12 the 16th, 2001, 4:20 p.m. I guess Mr. Peacock
13 here is striking out Telephone Toll Service, do
14 you see that?
15 A. Yes.
16 Q. Did you have a discussion with Mr.
17 Peacock after you received this language from
18 him as to why he struck that language?
19 A. I would feel certain that we
20 discussed it, but I don't recall the discussion.
21 Q. Well, let's look down to the next
22 entry, Shiroishi to Peacock, July the 17th,
23 2001, it is marked out there, Telephone Toll
24 Service. Do you know who did that mark out
25 there?

1 A. It looks as if Mr. Peacock did that
2 in the line read back to me at 4:20 on July
3 16th.
4 Q. And if you look at this version,
5 July 17th, 2001, 12:54 p.m., on the next sheet
6 I've represented that Shiroishi adds last
7 sentence, this Section 5.3.2 is interrelated to
8 Section 5.3.1.2. Do you see that?
9 A. Yes.
10 Q. Okay. Now, at that point in time,
11 subject to check, 5.3.1.2 was the 5.3.1.1 that
12 turned out to be, would you agree with that, or
13 do you not?
14 A. I don't have any -- it would appear
15 as though, yes.
16 Q. So relative to the discussion that
17 we just had a few minutes ago about a
18 definition of Switched Access Traffic not being
19 linked to the definition of Local Traffic,
20 they're certainly linked by virtue of this
21 sentence which you added, would you not agree?
22 A. The Voice Over IP provisions back to
23 the local traffic definition, yes. And I'd like
24 to take this time to point out that --
25 Q. I'd like to interrupt.

1 MR. SHORE: No. Let her finish.
2 She said yes, but she's entitled to explain.
3 MS. CECIL: Okay. I just don't
4 want to have a ten-minute discussion about --
5 MR. SHORE: Well, she's entitled to
6 answer the question fully.
7 MS. CECIL: Andrew, we don't need
8 all -- I'm going to ask her about Voice Over
9 IP, I just don't want to have a ten-minute
10 discussion with her about she meant by Voice
11 Over IP relative to Switched Access Traffic.
12 MR. SHORE: Answer the question as
13 you were intending.
14 THE WITNESS: Okay. If you look at
15 the first Switched Access Traffic definition
16 you'll notice that the last sentence says,
17 provided, however, that any Voice Over IP
18 transmission which originates in one local
19 calling area and terminates in another local
20 calling area --
21 Q. (By Ms. Cecil) Will you show me
22 where you're talking about?
23 A. The last sentence of the July 11th,
24 2001, entry.
25 Q. July 11th, all right.

1 A. It references local calling area in
2 the last sentence.
3 Q. Um-hum.
4 A. And then that is stricken by Mr.
5 Peacock. And then it's added back in evidently
6 by me on July 17th to now reference LATA
7 instead of local calling area. And that's at
8 the same point that the 5.3.2 is interrelated is
9 added is when that change from local calling
10 area to LATA is made. That was all I was
11 going to say.
12 Q. All right. But you didn't say, and
13 you drafted the language, that the last
14 sentences here that deal with Voice Over IP are
15 interrelated to the definition of Local Traffic,
16 did you?
17 A. The language does not say that, no.
18 Q. In fact, it says this, capital S
19 section is interrelated to the definition of
20 Local Traffic in 5.3.1.2?
21 A. Right. And I've previously
22 testified, the entire definition of Switched
23 Access Traffic was inserted to address the Voice
24 Over IP issue as is referenced in the e-mail
25 transmitting the proposal.

1 Q. All right. If that's the case, what
2 you were trying to do here is, I guess -- I
3 understand from looking at the language is to
4 basically say that the parties have not agreed
5 as to how they're going to compensate Voice Over
6 IP calls; isn't that correct?
7 A. Well, basically either party reserved
8 its rights and agreed to abide by any effective
9 and applicable FCC rules.
10 Q. Okay. You could have agreed to that
11 without having to have any definition of
12 Switched Access Traffic in this agreement; could
13 you not have?
14 A. I'm not sure that you could have
15 because basically the issue revolved around Voice
16 Over IP transmission switched access traffic or
17 not. And that's kind of what it says right
18 there, the parties have been unable to agree as
19 to whether Voice Over IP transmissions which
20 cross local calling area boundaries constitute
21 Switched Access Traffic.
22 I guess I would have to think about
23 whether it would have been possible to do it or
24 not. But, typically, it would not have been the
25 approach that we would have taken given that

1 that was the way the issue was actually phrased
2 and understood by the parties.
3 Q. Well, you could have just as easily
4 said the parties have agreed not to -- have
5 agreed to no compensation scheme for Voice Over
6 IP until the FCC or state commission decides;
7 could you have not?
8 A. Well, that's not what we agreed to.
9 I want to make clear for the record that
10 BellSouth didn't agree to no compensation scheme.
11 We agreed basically that either party would
12 abide by the effective rules as they, you know
13 -- and obviously, we could have different
14 positions about that. But there is no -- in
15 that sentence, there is no waiving of
16 compensation.
17 Q. But just as easily you could have
18 said the parties will wait until the FCC or the
19 state commission decides on how to treat Voice
20 Over IP. You could have said that, couldn't you?
21 A. Again, I would have to look at the
22 proposal to see if it would have met all the
23 concerns that BellSouth had about the issue.
24 Q. Well, there was nothing magical about
25 tying it to Switched Access Traffic.

1 A. Well, I think that there was
2 something, maybe not magical, but technically
3 needed because of the fact that that's where the
4 issue -- that was what the dispute between the
5 parties was. And if you didn't reference the
6 Switched Access Traffic dispute, then I'm not
7 sure that you would have -- that BellSouth would
8 have preserved its rights or protected what it
9 was concerned about on this issue of Voice Over
10 IP.
11 Q. Well, you were taking the position
12 that it was Switched Access Traffic, but AT&T
13 was taking the position it was local. So you
14 could have just as easily decided the issue in
15 the context of deciding what was Local Traffic
16 and not tying it to what was Switched Access
17 Traffic, couldn't you?
18 A. Again, I don't know that I would
19 agree with that. I think for purposes of the
20 way that the issue is phrased and the
21 complexities around the issue, I don't know that
22 BellSouth would have been comfortable without
23 referencing the switched access issue.
24 Q. Okay. Let's go to the next entry,
25 Shiroishi to Peacock, July the 18th, 2001, 7:27

1 in the evening. Here I've represented that you
2 inserted IntraLATA intrastate, intrastate
3 InterLATA and interstate InterLATA, do you see
4 that?
5 A. Yes.
6 Q. Why would you insert that language,
7 or why did you insert that language at this
8 time?
9 A. I don't recall the specific
10 discussions we had around it. I guess that we
11 still had outstanding the striking of the
12 Telephone Toll Service and that we were
13 discussing that issue, I don't recall.
14 Q. And your explanation earlier that
15 there was no contradiction because there's no
16 linking, that doesn't take place here because
17 there is linking by virtue of the last sentence,
18 this Section is interrelated to Section 5.3.1.1,
19 correct?
20 A. No, I wouldn't agree. Again,
21 BellSouth proposed the definition of Switched
22 Access Traffic to deal with the Voice Over IP
23 issue. At this point the parties were going
24 back and forth on finalizing language. And we
25 ultimately, obviously, struck the intraLATA

1 intrastate because it isn't necessary. I don't
2 know -- I'd have to go back through and say I
3 don't know that I would agree that it
4 contradicted, but it wasn't necessary because of
5 the Voice Over IP provisions that fell later.
6 Q. But you added it in on July the
7 18th, right?
8 A. That's what the red-lines reflect,
9 yes.
10 Q. Are you saying that was a mistake on
11 your part?
12 A. No. The parties at that point were
13 still negotiating language and discussing the
14 issue, it wasn't finalized language.
15 Q. But in the definition of Local
16 Traffic you didn't have -- you didn't say that
17 all intraLATA traffic would be Toll or Switched
18 Access Traffic, did you? You said only that
19 that went over switched access arrangements,
20 right? Right?
21 And I don't believe that this
22 language says that all intraLATA traffic is
23 Switched Access Traffic either. I mean, it
24 basically says that Switched Access Traffic is
25 defined as telephone calls requiring local

1 transmission or switching services for the
2 purpose of origination and termination, then it
3 lists out the types, of Switched Access Traffic.
4 Then it goes on to say it includes but is not
5 limited to the following types of traffic. And
6 there's still, if you look, Feature Group A, B,
7 D, toll free access, 900 and their successors
8 are all types of switched access arrangements.
9 Isn't all intraLATA traffic going to
10 require local transmission of switching services?
11 A. Not special access. I mean, you
12 could -- there are other types of services you
13 can purchase.
14 Q. We're not talking about special
15 access here, are we?
16 A. Well, you asked me do all local
17 calls require.
18 Q. In the context of this definition of
19 Switched Access Traffic we're not talking about
20 special access, are we?
21 A. No.
22 Q. So can you give me an example,
23 outside of a special access situation, where you
24 would not need local transmission or switching
25 services to complete an intraLATA call?

1 MR. SHORE: In the context of
2 this --
3 THE WITNESS: I don't want to give
4 an exhaustive answer on that. I can't give you
5 an example, but that doesn't mean that there
6 aren't.
7 Q. (By Ms. Cecil) You don't know?
8 A. I don't know.
9 Q. Let's go down to the next to the
10 last one. Peacock to Shiroishi, July the 19th,
11 2001. Now, it looks like Mr. Peacock is
12 objecting to intraLATA intrastate, do you see
13 that?
14 A. I see where you say he highlights it
15 for discussion.
16 Q. If it's highlighted and it comes
17 from Mr. Peacock, do you dispute that that's a
18 signal to you that he wants to discuss that
19 language?
20 A. No. Again, I mean, his e-mail would
21 probably state that or else that would be --
22 you know, again, these are proposals going back
23 and forth to the parties. These are not
24 finalized language at this point.
25 Q. But if he highlighted it, the course

1 of dealing with the parties would have indicated
2 that he wanted to talk to you about that,
3 correct?
4 A. Probably, yes.
5 Q. Did you talk to Mr. Peacock about
6 that language?
7 A. I'm sure that we did, given that
8 there were changes made to it.
9 Q. And what did he say?
10 A. I don't recall the specific
11 discussions.
12 Q. All right. Let's go down to --
13 MR. SHORE: Let the record reflect
14 that Ms. Cecil smiled and grinned at Mr.
15 Peacock, for whatever that's worth. I mean,
16 we're just wasting time here. If you want to
17 grin and be silly, that's fine. But we're
18 wasting a lot of time here, and I just don't
19 think that's appropriate.
20 I just wanted to point it out for
21 whatever that's worth. I know you don't care
22 what I point out. But I just feel that we're
23 wasting some time here, and to make faces and
24 that kind of thing is just silly and
25 unprofessional in my opinion.

1 MS. CECIL: Well, I'm trying to make
2 sure that I understand the witness' testimony
3 because she's filed testimony before this
4 commission saying there were extensive
5 discussions between the parties about switched
6 access arrangements and what that constituted
7 between the parties, there was discussion about
8 what switched access traffic was.
9 I asked her if she recalled the
10 discussion with Mr. Peacock about something he
11 highlighted the day the contract was being
12 executed and she doesn't recall.
13 MR. SHORE: Well, I understand her
14 testimony, but for you to sit there and grin
15 and make faces at your client in a deposition I
16 think is unprofessional. If you want to argue
17 what that means, that's fine, that's your job.
18 But to sit there and make faces and grin, I
19 just is unprofessional and silly.
20 Q. (By Ms. Cecil) So, Ms. Shiroishi,
21 are you saying, again, that you don't recall the
22 discussions you had with Mr. Peacock regarding
23 why he highlighted IntraLATA intrastate?
24 A. Not specifically that issue. But
25 again, my testimony earlier about the discussions

1 on switched access arrangements were in the
2 context of the Local Traffic definition, this is
3 not the Local Traffic definition.
4 The discussions around the Switched
5 Access Traffic definition and all of the changes
6 that were made to it were, again, in the
7 context of Voice Over IP and how the parties
8 were going to handle that.
9 Q. Well, that kind of gets to the crux
10 of one of the positions that you take in this
11 proceeding, which is the definition of Local
12 Traffic in 5.3.1 really stands on its own
13 separate and apart from the definition of
14 Switched Access Traffic in 5.3.3; isn't that
15 correct?
16 A. Correct.
17 Q. They're not to be interrelated even
18 though they say that they're interrelated?
19 A. My testimony, as I've given before,
20 is that the interrelationship language was added
21 to address the Voice Over IP issue because of
22 the fact, as I talked about earlier, the change
23 was made from local calling area to LATA. And
24 again, we've talk about that Voice Over IP
25 transmissions do not typically come over switched

1 access arrangements.
2 So, therefore, in order for BellSouth
3 to agree that we would address Voice Over IP
4 from a LATA standpoint, as opposed to a local
5 calling area standpoint, that needed to be
6 interrelated back to Local Traffic definition so
7 that someone did not have a Voice Over IP
8 provision or ask to elect a Voice Over IP
9 provision that handled it on a LATA basis but
10 yet had a Local Traffic definition that dealt
11 with it on a local calling area basis. So the
12 interrelationship, again, was from the Voice Over
13 IP to the Local Traffic definition, and we -- I
14 know we don't agree on that issue, but that is
15 my position.
16 Q. Okay. Let me make sure I
17 understand. So if you have a LATA-wide local
18 definition of Local Traffic, as is in the AT&T
19 agreement, are you saying then that in a
20 subsequent provision of the contract, if you're
21 talking about Voice Over IP, and that being not
22 switched access unless it's from one LATA to the
23 other, that you've got to interrelate those two?
24 A. Not the local -- it is not a
25 concern of BellSouth to have the Local Traffic

1 definition interrelated to the Voice Over IP
2 provision, but the other way around, or the
3 Switched Access Traffic.
4 Because if I had a carrier who asked
5 to adopt the Voice Over IP provisions, which
6 addressed how Voice Over IP traffic would be
7 handled from a LATA perspective versus a local
8 calling area perspective, and then they had a
9 definition of Local Traffic that was local
10 calling area and not LATA, I would have an
11 unaddressed provision about what happened to
12 Voice Over IP provisions -- I'm sorry, voice
13 over transmissions that were outside the local
14 calling area but within the LATA. I would not
15 have anything to address that. That would just
16 be a blank or a void.
17 So when BellSouth agreed to the
18 Voice Over IP provisions that we did with AT&T,
19 we wanted to make sure that someone could not
20 adopt that and have still a traditional local
21 calling area definition of Local Traffic and
22 thus have that, quote, void or gap not
23 addressing what would happen about intraLATA
24 Voice Over IP transmission.
25 And we're in a holding pattern, I

1 guess you could say, with the FCC on that
2 issue. But that issue at a state level would
3 be able to be addressed by the commission and
4 BellSouth wouldn't want to let that gap or void
5 be unaddressed. So the interrelated sentence
6 was added to the Voice Over IP language at the
7 time we changed that to LATA in order to ensure
8 that we didn't have that gap in a requesting
9 contract.
10 Q. All right. So if you have a
11 situation where you have voice over IP covered
12 and a Switched Access Traffic section which has
13 the LATAwide concept as you've just indicated
14 for Voice Over IP, then you would also need in
15 that Switched Access Traffic section to
16 interrelate it back to the definition of Local
17 Traffic if it's LATAwide; is that correct?
18 A. If someone -- I'm sorry, I don't
19 know if I understand what you said.
20 Q. Yeah. I think what you're saying is
21 when you have a definition of Switched Access
22 Traffic and then you put in that definition of
23 Switched Access Traffic language regarding Voice
24 Over protocol related to the LATA, as you've
25 just described, then you would need to say in

1 that switched access paragraph that it's
2 interrelated to another part of the agreement
3 that deals with local traffic; is that what
4 you're saying?
5 A. For the purposes of the Voice Over
6 IP provisions you would need to interrelate
7 that.
8 Q. All right. Let's move, then, to the
9 interLATA Toll Traffic Matrix.
10 MR. SHORE: IntraLATA, right?
11 MS. CECIL: Yeah. And I think we
12 can cover this quickly and then we'll take a
13 lunch break, if that's okay?
14 Is that okay with you, Patty?
15 MS. CHRISTENSEN: Yeah, that's fine.
16 Q. (By Ms. Cecil) If you look at the
17 first entry here, Ms. Shiroishi, from the
18 red-lines it appeared to me that as of July the
19 11th, 2001, you were still proposing a
20 definition of intraLATA Toll Traffic in 5.4.1 as
21 well as compensation for intraLATA Toll Traffic
22 in 5.4.2, do you see that?
23 A. Yes. Those provisions, subject to
24 check, were still in the document at that time.
25 Again, I think they had been there from the

1 beginning.
2 Q. And then you deleted them on July
3 the 18th, 2001, in a transmission to Mr.
4 Peacock, correct?
5 A. Correct.
6 Q. Okay.
7 MS. CECIL: That's all I have in
8 terms of questions on Exhibit No. 1. Why don't
9 we take a lunch break? How long do you guys
10 want to take?
11 THE WITNESS: I guess it depends on
12 how long --
13 MS. CHRISTENSEN: How much more
14 questioning do you think you have?
15 MS. CECIL: I'd say probably about
16 an hour, Patty.
17 MS. CHRISTENSEN: Okay.
18 THE WITNESS: Well, do we want to
19 just keep going?
20 MS. CECIL: No, we need to take a
21 break.
22 MS. CHRISTENSEN: It's up to y'all.
23 MS. CECIL: Excuse me?
24 MS. CHRISTENSEN: Hum?
25 MS. CECIL: At least probably about

1 another hour or so. We'll take whatever time
2 you think is appropriate for lunch.
3 MS. CHRISTENSEN: Y'all decide.
4 THE WITNESS: I would prefer less
5 because I have another 2:00 o'clock that I'd
6 like to make it to.
7 MS. CHRISTENSEN: A half hour,
8 maybe?
9 MS. CECIL: A half hour is fine.
10 MR. SHORE: Why don't we come back
11 at 1:25?
12 MS. CECIL: Okay.
13 MR. SHORE: That's about 34 minutes
14 on my watch, but that way we can -- it would
15 just probably be easier to disconnect the bridge
16 and dial back in just shortly before that, if
17 that's okay with you, Patty?
18 MS. CHRISTENSEN: That's fine.
19 (Thereupon, a short break was held)
20 Q. (By Ms. Cecil) Ms. Shiroishi, I'd
21 like to direct your attention to your direct
22 testimony filed in this proceeding. If you
23 would go to page 10, please.
24 A. (Witness complies.)
25 Q. Line 18.

A. Yes.

Q. Do you see that?

A. Yes.

Q. And you say there that the definition in the second interconnection agreement related to the type of arrangement or trunk group that the traffic originated or terminated over. And you're making this comment in the context of other language in attachment 3 which might impact the definition of Local Traffic; isn't that correct?

A. I would say that that sentence stands alone referencing the definition itself, but then I do go on to talk about other provisions in the interconnection agreement.

Q. Okay. So as I understand BellSouth's position, not only do we need to look at the definition of Local Traffic in 5.3.1 but we also need to look to other provisions in attachment 3 that talk about trunking?

MR. SHORE: Object to the form. You can answer your position or your opinion.

THE WITNESS: Again, the definition speaks for itself and talks about the switched access arrangement exclusion and that any traffic

1 that originates or terminates over switched
2 access arrangements will not be considered as
3 local.
4 I don't think that you'd have to say
5 that you'd have to go any further on that. I
6 mean, again, it stands on its own. But then I
7 do go on to talk about the other provisions in
8 the agreement that deal with trunking and trunk
9 group arrangements.
10 Q. (By Ms. Cecil) Okay. Well, would
11 you not agree that in the North Carolina
12 proceeding at the hearing we spent a fair amount
13 of time talking about whether or not your
14 interpretation of attachment 3 would require AT&T
15 to route its Local Traffic over local only toll
16 trunks in order for the traffic to be considered
17 local traffic, do you remember that discussion?
18 A. Yes. We talked about writing over
19 local toll trunk groups.
20 Q. Okay. And I noticed that when
21 BellSouth filed its brief in North Carolina that
22 it did not address that issue in any form or
23 fashion your argument that local trunks could
24 only be used for local traffic. Did you read
25 the BellSouth brief in North Carolina?

A. Yes, I did.

Q. Did you notice that there was no argument regarding local trunks as being necessary for Local Traffic?

A. Subject to check, I haven't gone back through it in the last day to say, or without reviewing it, to say yes or no. But subject to check, I'll take your word for it that it's not in there.

Q. All right. As we move forward in the Florida proceeding is BellSouth going to continue to argue that the kind of trunks that AT&T uses for its traffic has an impact on whether or not it can be compensated to Local Traffic?

A. Well, the definition of Local Traffic is what governs that. If you read the definition of Local Traffic it states that Local Traffic will be -- and I'm paraphrasing, I'm not reading from the provision -- anything that originates and terminates in the LATA except for calls that are originated or terminated through switched access arrangements.

So that definition excludes things that are originated or terminated through

1 switched access arrangements, which does deal
2 with routing, and that is BellSouth's position
3 in this case.
4 Q. I'm just trying to make sure I
5 understand. The fact that it wasn't briefed in
6 your brief in North Carolina should not in any
7 way lead AT&T to believe that you don't continue
8 to think that this is an issue before the
9 proceeding?
10 MR. SHORE: I'm going to object to
11 the form in just the misuse of the
12 characterization of things. Beth can answer the
13 questions.
14 THE WITNESS: No. I mean, BellSouth
15 obviously didn't address every issue in its
16 brief that was addressed at the hearing. But
17 the testimony that was given in North Carolina
18 is the same as it would be today and will be
19 in Florida.
20 Q. (By Ms. Cecil) Okay. All right.
21 You said that you had looked at the brief; is
22 that correct?
23 A. Yes.
24 Q. I'm going to read you an excerpt
25 from the brief. And then if you need to see

1 the brief, I'll be glad to give it to you,
2 although I did not make a copy and I don't
3 have a copy for the court reporter.
4 This is on page 12, BellSouth
5 states, finally, the fact that one provision in
6 an interconnection agreement is related to
7 another provision in the agreement does not mean
8 that a term specifically defined in one section
9 has the same meaning as a different term used
10 in another section.
11 Does that continue to be your case,
12 continue to be your position in this proceeding?
13 A. Again, I mean, you basically read
14 out of the brief and nothing has changed from
15 that. I don't know if you have a question for
16 me about that.
17 Q. Okay. Let me turn to another
18 section of the brief. There is a statement
19 here that says AT&T --
20 MR. SHORE: Can you just give me a
21 page reference?
22 MS. CECIL: Sure. It's on page 13.
23 MR. SHORE: Thanks.
24 Q. (By Ms. Cecil) AT&T's interpretation
25 of the interconnection agreement as requiring the

1 parties to treat all intraLATA calls including
2 those carried over switched access arrangements
3 as Local Traffic violates the fundamental
4 principle of contract construction because it
5 renders the entire except clause within the
6 Local Traffic definition meaningless.
7 Mr. King, the only witness whose
8 testimony AT&T filed in support of its direct
9 case, testified that the expressed exclusion from
10 the definition of Local Traffic for calls
11 carried over switched access arrangements applies
12 to exclude only interLATA calls from the
13 definition of Local Traffic.
14 And then there is a reference to the
15 transcript. And then there is the statement,
16 interLATA calls, as Mr. King acknowledges, are
17 never treated as local, however.
18 Is that still BellSouth's position
19 that ~~intraLATA~~ interLATA calls are never treated as local?
20 MR. SHORE: I'm going to object to
21 that because the brief says that was AT&T's
22 testimony, but you can answer.
23 THE WITNESS: I mean, the document
24 speaks for itself. And again, that was quoting
25 from AT&T's testimony, as I recall.

1 Q. (By Ms. Cecil) I'll let you see the
2 language, it doesn't say that. The language
3 says ~~intraLA~~interLATA calls, as Mr. King acknowledged,
4 are never treated as local, however.
5 MR. SHORE: Is that a reference to
6 the transcript where Mr. King's testimony was
7 that --
8 Q. (By Ms. Cecil) Okay. I guess I
9 should ask the question, is it BellSouth's
10 position that an ~~intra~~interLATA call can never be
11 treated as local?
12 A. I guess that depends how you define
13 treated. I mean, there are certain --
14 typically, interLATA calls, no, are not local
15 for purposes of compensation or anything else.
16 You know, I don't know -- you'd have to give
17 me a specific example of what you're asking.
18 Q. Well, when you say typically, what
19 do you mean?
20 A. InterLATA calls that cross LATA
21 boundaries are typically not local. There are
22 some type areas that are considered
23 cross-boundary traffic that are ~~intra~~interLATA but
24 have been deemed local by the State Commission.
25 So obviously, that would be an exception to that

1 type of rule but -- and again, I'm not
2 comfortable giving you a generic answer when I
3 don't know what you're asking me specifically.
4 Q. So it is possible, then, for a State
5 Commission to determine that an ~~intra~~ interLATA call
6 is a local call?
7 A. Yes. Those would be established as
8 cross-boundary type arrangements and the parties
9 who service those areas would establish such in
10 their tariffs.
11 Q. In fact, it would be possible for
12 the FCC to make that determination; isn't that
13 correct?
14 A. Historically, I don't know if the
15 FCC has ever addressed cross-boundary traffic or
16 not or if that's been left to the State
17 Commissions, I don't know.
18 Q. When you use the term cross-boundary,
19 what are you referring to?
20 A. Cross-boundary is typically traffic
21 that crosses a state or LATA boundary line but
22 yet is being deemed local for purposes of an
23 area of interest. An example is Memphis to
24 West Memphis, where even though that crosses a
25 LATA or state boundary, the commission has

1 deemed that to be local for purposes of end-user
2 type calling.
3 Q. Okay. Let's talk about ISP traffic
4 because you've agreed in the Florida
5 interconnection agreement to whatever decision a
6 State Commission or the FCC might decide
7 relative to ISP traffic on a going forward
8 basis; isn't that correct?
9 MR. SHORE: Object to the form. The
10 agreement says what it says, but that isn't what
11 it says.
12 THE WITNESS: Will you rephrase your
13 question?
14 Q. (By Ms. Cecil) What is your position
15 as to what the FCC could -- or a State
16 Commission could say in the future about ISP
17 traffic and what would its impact be on the
18 interconnection agreement?
19 A. What they could say?
20 Q. Um-hum.
21 A. That's a pretty open-ended question.
22 Obviously, at this point in time, we have an
23 ISP order on remand that is the effective rule
24 of the land. So we have a set of rules that
25 is effective for purposes of how we handle ISP

1 bound traffic.
2 In the future, obviously, I guess
3 the FCC could issue an additional order and
4 could say anything that they legally find
5 themselves able to say. Under the current ISP
6 order on remand, the FCC put in place certain
7 boundaries about what State Commissions could or
8 couldn't do. But again, a State Commission
9 could make a finding that is later overturned on
10 appeal, so I can't -- the gamut of the
11 possibilities of what could happen, I guess, are
12 endless.
13 But today we have rules that talk
14 about how that traffic is treated, and there is
15 generally consensus in the industry about how
16 that is. There may by some implementation-type
17 disputes or interpretations, but the FCC does
18 have an order that's out that is effective for
19 purposes of operations.
20 Q. Isn't it possible that at some date
21 in the future the FCC or the state commission
22 could determine that calls to ISP are interLATA
23 calls?
24 A. Well, the FCC already, in its
25 current rule, has determined that calls to ISPs

are information access and predominantly interstate in nature.

Q. That's different than a determination that's interLATA; isn't that correct?

A. I don't know that I would -- I guess it depends on how you mean by different. For purposes of compensation, they set forth a scheme under Section 201 of the Act. For purposes of jurisdiction, I guess it depends on specifically what difference you're asking me about.

Q. Well, interstate traffic is not the same as ~~intra~~LATA traffic, is it?

A. InterLATA traffic can be interstate but there is also ~~intra~~LATA traffic that is not interstate.

Q. I~~ntraLATA~~ could be interstate or intrastate, right?

A. Yes.

Q. So when the FCC came out with that order, the ISP order, they basically said that it's predominantly interstate, they didn't say it was ~~intra~~LATA, did they?

A. I believe that the order states that it is predominantly interstate in nature and

1 information access.
2 Q. Did BellSouth not reserve some rights
3 in the Florida interconnection agreement in the
4 event there was a subsequent decision by the FCC
5 regarding ISP traffic?
6 A. I believe that the agreement does
7 address that, although I don't have those
8 provisions in front of me.
9 Q. What about the state commission,
10 isn't there the possibility that a state
11 commission could determine that ISP traffic is
12 interLATA traffic?
13 A. I guess I will reserve legal
14 judgment for the lawyers. But from a layman's
15 perspective, it seems as though the FCC ISP
16 order on remand limited the state's abilities to
17 make judgment about ISP bound traffic, so I
18 don't know -- again, I'm not a lawyer, but I
19 don't know legally if a state commission could
20 address that issue from a going forward
21 standpoint under the order. They did give the
22 state some leeway in addressing past disputes.
23 Q. What about Voice Over IP, isn't it
24 possible that the FCC could subsequently
25 determine that that's intraLATA traffic?

A. The FCC could make a determination on that issue, yes. There is no -- I mean, there's no docket now that's currently teed up other than the notice of proposal we're making for intercarrier compensation.

Q. What about the petition that AT&T has filed regarding Voice Over IP traffic that's pending at the FCC?

A. Yes. They could make a determination in that case, I guess, that would -- I don't know legally if that would apply to the entire industry or just set a precedent for that case.

Q. And what about the state commission, could not a state commission determine that Voice Over IP traffic is intraLATA traffic?

A. The state commission, as I understand it, would have jurisdiction for the intrastate, intraLATA portion, but not the interstate, interLATA. And when BellSouth has arbitrated that issue in the past many of our commissions have declined to rule because of the jurisdictional issues around who actually has jurisdiction over that.

Q. But they could, in the future, the

1 State Commission could in the future, just
2 because they haven't to date doesn't mean they
3 can't in the future?
4 A. Yeah. Again, from a legal
5 perspective, obviously, the jurisdictional rules
6 are what they are. But yes, it would seem
7 that the state commission could rule on
8 intrastate.
9 Q. Is it possible for an ISP call to
10 remain within a LATA?
11 A. To physically originate and terminate
12 in the LATA?
13 Q. Um-hum.
14 A. It is possible. It's very rare that
15 that would happen. The end-user dialing the ISP
16 would actually have to visit a website that is
17 located in that same LATA.
18 Q. But possible?
19 A. It is possible.
20 Q. What about Voice Over IP, isn't it
21 possible for that traffic to stay within a LATA?
22 A. Again, it is. It's very rare that
23 that would be the case, but it is possible.
24 Q. All right. I want to ask you a few
25 questions about the note taking that took place

1 in your negotiations with AT&T and the
2 red-lining, et cetera.
3 I believe in response to discovery
4 that you have provided, I guess, two pages of
5 handwritten notes regarding the negotiations; is
6 that not correct?
7 A. We have turned over the documents.
8 I don't know if -- I know that there were
9 handwritten notes, I don't know if it's two
10 pages.
11 Q. Well, I've given you a copy of
12 everything that you've provided to us in
13 discovery there before you. If you would look
14 through and tell me how many pages of
15 handwritten notes you provided.
16 A. (Witness complies.) In response to
17 PODs labeled 2 and 3, there are three pages of
18 handwritten notes. You just want handwritten
19 documents?
20 Q. Or typed notes, anything that you
21 would say are notes or minutes of meetings.
22 A. Well, there are notes in the
23 transmittal e-mails that go back and forth on
24 multiple red-lines, do you want me to include
25 those?

1 Q. That would be great, thank you.
2 MR. SHORE: You want her to -- when
3 we filed these -- I believe they're a part of
4 the record, do you want her to read every one
5 now into the deposition transcript?
6 MS. CECIL: No. I'm just trying to
7 get an idea of how many notes she provided or
8 minutes of meetings that you provided given that
9 she's testified that the negotiations took, you
10 know, months and months and months.
11 THE WITNESS: Well, I mean, I can
12 go through this and do this, but they're all
13 here. In response to production of documents
14 Items 2 and 3, there's an e-mail from Michael
15 Willis to Bill Peacock which has some verbiage
16 about the document. There's an e-mail behind it
17 from myself to Lea Cooper at Honeycutt and
18 Michael Willis that was to be forwarded to AT&T
19 which has some notes in it. It's the same
20 document. Behind that there is a page typed of
21 notes that was transmitted. And then at a the
22 back of that POD is the three pages of
23 handwritten notes that I talked about earlier.
24 In response to production of
25 documents 2, 3, 6(D), 8(A) and (C), there is an

1 e-mail transmittal that has some discussion in
2 it with actually a string of e-mails attached,
3 and that is two pages typed. And at the back
4 of that same production of documents, there is
5 an e-mail that's from Mr. Peacock to myself, so,
6 I guess, that wouldn't count. Actually, I'm
7 sorry, that was in response to 6 (A)(B) and
8 (C).
9 There's an e-mail from Michael Willis
10 that has attached an e-mail from myself to
11 Michael to be forwarded to AT&T which has notes
12 in it. And then at the back of that is the
13 e-mail from Mr. Peacock.
14 In response to documents 2, 3,
15 6(D)and 8(A), there's an e-mail from Mr. Peacock
16 with a detached e-mail from myself, but I
17 believe that that's already been referenced.
18 In response to Item 2, 3, 6(D) and
19 8(D) there is an e-mail transmitting a red-line
20 that has some notes in it.
21 In response to Item 26 there's an
22 e-mail from myself to Michael Willis, internal,
23 that's to be forwarded to AT&T that has some
24 notes in it as well as handwritten notes from
25 my calendar, that's three pages. It's actually

1 six pages of calendar but three pages on the
2 document. In response to Item 28 there are
3 e-mails -- do you want it just if it's from
4 me?
5 MS. CECIL: Um-hum.
6 THE WITNESS: Okay. In response to
7 production of documents Items 2, 3 and 22, there
8 is an e-mail from myself to Michael and Lea
9 asking to be forwarded to AT&T with some notes,
10 typed notes. In response to production of
11 documents 260 and 8(D), there is an e-mail from
12 myself to AT&T with some notes transmitting the
13 document. I believe that that's it. Yes, that's
14 it.
15 Q. (By Ms. Cecil) Okay. I'll use the
16 terminology, Andrew may object, but the vast
17 majority of the notes that you've just
18 identified transmit a red-line version of the
19 contract; is that a fair statement?
20 MR. SHORE: No objection.
21 THE WITNESS: Yes.
22 Q. (By Ms. Cecil) All right. Did you
23 make any handwritten notes yourself?
24 A. Typically, my process when I'm the
25 negotiator of an item is to make handwritten

1 notes during the call, then turn those into a
2 red-line which I then send to the company for
3 either confirmation or counter proposal. And at
4 that time that I send the red-line I don't keep
5 the handwritten notes because the red-line
6 document reflects those changes.
7 Q. Is that your personal process or is
8 that a company process?
9 A. That is my personal process and that
10 is one process that falls within the lines of
11 how BellSouth handles documentation and
12 red-lining.
13 Q. And is that the same advice that you
14 give the contract negotiators whom you supervise
15 to make notes during a negotiation and then put
16 them in a red-line and then destroy the notes
17 immediately?
18 A. We do not have specific -- again, I
19 would not give anybody specific guidance to
20 destroy or not destroy. The way that typically
21 our documentation that I advise people is to
22 keep what you need to keep to document the
23 issues and make sure that you have that until
24 the issues are resolved.
25 And then at the time that an

1 agreement is signed and the issue is resolved
2 there's no need to keep all the documentation,
3 unless we're under a lawsuit to retain those
4 type documents.
5 But absent litigation pending or any
6 type of lawsuit that would require the retention
7 of all documents, once the agreement is
8 finalized or even once the section is finalized
9 or the red-line been transmitted to embody those
10 notes, it's not necessary to keep them.
11 MS. CECIL: No further questions.
12 MR. SHORE: Patty, do you intend on
13 asking any questions?
14 MS. CHRISTENSEN: At this time, no,
15 we don't have any questions.
16 MR. SHORE: I guess it's my turn
17 then, and I don't know that I have any but I
18 just want to make sure.
19 MS. CHRISTENSEN: We don't have any
20 at this point.
21 MR. SHORE: Okay. I'm not going to
22 ask her any either.
23 MS. CHRISTENSEN: Okay. So are we
24 concluded?
25 MS. CECIL: We're concluded.

1 MS. CHRISTENSEN: Thank you.
2 (Whereupon, the deposition was
3 concluded at 2:25 p.m.)
4
5
6
7
8
9
10
11
12
13
14
15
16
17
18
19
20
21
22
23
24
25

1 DESCRIPTION OF EXHIBITS

2 **Exhibit** **Description**

3 1 (local traffic matrix switched access
4 traffic matrix, intraLATA toll traffic
5 matrix)
6
7
8
9
10
11
12
13
14
15
16
17
18
19
20
21
22
23
24
25

STATE OF GEORGIA:

COUNTY OF FULTON:

I hereby certify that the foregoing transcript was reported, as stated in the caption, and the questions and answers thereto were reduced to typewriting under my direction; that the foregoing pages represent a true, complete, and correct transcript of the evidence given upon said hearing, and I further certify that I am not of kin or counsel to the parties in the case; am not in the employ of counsel for any of said parties; nor am I in anywise interested in the result of said case.

1 Disclosure Pursuant to Article
2 8(B) of the Rules and Regulations of the
3 Board of Court Reporting of the Judicial
4 Council of Georgia, I make the following
5 disclosure:
6 I am a Georgia Certified Court
7 Reporter, here as a representative of
8 Alexander Gallo & Associates, Inc., to report
9 the foregoing matter. Alexander Gallo &
10 Associates, Inc., is not taking this
11 deposition under any contract that is
12 prohibited by O.C.G.A. 5-14-37 (a) and (b).
13 Alexander Gallo & Associates,
14 Inc., will be charging its usual and
15 customary rates for this transcript.
16
17 Susan H. Horner
18
19 SUSAN H. HORNER CCR-B-808
20
21
22
23
24
25

1 CAPTION

2 The Deposition of **Elizabeth R.A.**
3 **Shiroishi**, taken in the matter, on the date,
4 and at the time and place set out on the
5 title page hereof.
6 It was requested that the deposition
7 be taken by the reporter and that same be
8 reduced to typewritten form.
9 It was agreed by and between counsel
10 and the parties that the Deponent will read
11 and sign the transcript of said deposition.
12
13
14
15
16
17
18
19
20
21
22
23
24
25

1 CERTIFICATE

2 STATE OF_____:

3 COUNTY/CITY OF_____:

4 Before me, this day, personally

5 appeared, **Elizabeth R.A. Shiroishi**, who, being

6 duly sworn, states that the foregoing

7 transcript of his/her Deposition, taken in

8 the matter, on the date, and at the time and

9 place set out on the title page hereof,

10 constitutes a true and accurate transcript of

11 said deposition.

12 _____

13 **Elizabeth R.A. Shiroishi**

14

15 SUBSCRIBED and SWORN to before me this

16 _____ day of_____, 2003 in the

17 jurisdiction aforesaid.

18 _____ _____

19 My Commission Expires Notary Public

20

21

22

23

24

25

DEPOSITION ERRATA SHEET

RE: Alexander Gallo & Associates
File No. 4131
Case Caption: Re: Docket No. 020919-TP
Complaint of AT&T Communications, et al.

Deponent: **Elizabeth R.A. Shiroishi**
Deposition Date: April 25, 2003

To the Reporter:
I have read the entire transcript of my Deposition taken in the captioned matter or the same has been read to me. I request that the following changes be entered upon the record for the reasons indicated. I have signed my name to the Errata Sheet and the appropriate Certificate and authorize you to attach both to the original transcript.

Page No. _____ Line No. _____ Change to: _____

_____

Reason for change: _____

Page No. _____ Line No. _____ Change to: _____

_____

Reason for change: _____

Page No. _____ Line No. _____ Change to: _____

_____

Reason for change: _____

Page No. _____ Line No. _____ Change to: _____

_____

Reason for change: _____

Page No. _____ Line No. _____ Change to: _____

_____

Reason for change: _____

Deposition of Elizabeth R.A. Shiroishi

Page No. _____ Line No. _____ Change to: _____

_____

Reason for change: _____

Page No. _____ Line No. _____ Change to: _____

_____

Reason for change: _____

Page No. _____ Line No. _____ Change to: _____

_____

Reason for change: _____

Page No. _____ Line No. _____ Change to: _____

_____

Reason for change: _____

Page No. _____ Line No. _____ Change to: _____

_____

Reason for change: _____

Page No. _____ Line No. _____ Change to: _____

_____

Reason for change: _____

SIGNATURE: _____ DATE: _____

Elizabeth R.A. Shiroishi

LOCAL TRAFFIC MATRIX

Shiroishi to Peacock July 11, 2001 6:12 p.m.	**5.3** 5.3.1 **5.3.1.1**	**Interconnection Compensation** <u>Compensation for Local Traffic</u> For reciprocal compensation between the Parties pursuant to this Attachment, Local Traffic is defined as any telephone call that originates and terminates in the same LATA except for those calls that are originated or terminated through switched access arrangements as established by the ruling regulatory body when the original Party has its own switch. **[OPEN-AT&T]** Therefore when an AT&T end user originates traffic and AT&T sends it to BellSouth for termination, AT&T will determine whether the traffic is local or intraLATA toll. When a BellSouth end user originates traffic and BellSouth send it to AT&T for termination, BellSouth will determine whether the traffic is local or intraLATA toll. Each Party will provide the other with information that will allow it to distinguish local from intraLATA toll traffic. At a minimum, each Party shall utilize NXX's in such a way that the other Party shall be able to distinguish local from intraLATA toll traffic. **DISAGREE** **AT&T PROPOSAL: As clarification of this definition and for reciprocal compensation, Local Traffic does include traffic that originates and terminates to or through enhanced service provider or information service provider.** **BST PROPOSAL: As clarification of this definition and for reciprocal compensation, Local Traffic does not include traffic that originates from or is directed to or through an enhanced service provider or information service provider.**
Shiroishi to Peacock July 17, 2001 12:54 p.m.	5.3.1. 5.3.1.1	<u>Compensation for Local Traffic</u> ***** Shiroishi adds language that Parties have agreed to compensation for calls to ISPs by agreeing to implement FCC's ISP Order ***** For the treatment of local and ISP-bound traffic in this Agreement, the Parties agree to implement the FCC's Order on Remand and Report and Order in CC Docket 96-98 and 99-68 released April 27, 2001 ("ISP Order on Remand"). The Parties further agree to amend this agreement, within sixty (60) days of execution, to incorporate language reflecting the FCC ISP Order on Remand. At such time as that amendment is finalized, the Parties agree to work cooperatively to "true-up" compensation amounts consistent with the terms of the amended language from the effective date of the FCC ISP Order on Remand to the date the amendment is finalized. Additionally, the Parties agree to

EXHIBIT
AT&T Shiroishi
#1 4/25/03
Alexander Gallo Associates, Inc.

		apply a "LATAwide" local concept to this Attachment 3, meaning that traffic that has traditionally been treated as intraLATA toll traffic will now be treated as local for intercarrier compensation purposes, except for those calls that are originated or terminated through switched access arrangements as established by the ruling regulatory body. ~~For reciprocal compensation between the Parties pursuant to this Attachment, Local Traffic is defined as any telephone call that originates and terminates in the same LATA except for those calls that are originated or terminated through switched access arrangements as established by the ruling regulatory body when the original Party has its own switch.~~ ~~**[OPEN-AT&T]**~~ ~~Therefore when an AT&T end user originates traffic and AT&T sends it to BellSouth for termination, AT&T will determine whether the traffic is local or intraLATA toll. When a BellSouth end user originates traffic and BellSouth send it to AT&T for termination, BellSouth will determine whether the traffic is local or intraLATA toll. Each Party will provide the other with information that will allow it to distinguish local from intraLATA toll traffic. At a minimum, each Party shall utilize NXX's in such a way that the other Party shall be able to distinguish local from intraLATA toll traffic.~~ ***** Shiroishi strikes through above language. *****
Shiroishi to Peacock July 18, 2001 7:27 a.m.	5.3.1 5.3.1.1	<u>Compensation for Local Traffic</u> For the treatment of local and ISP-bound traffic in this Agreement, the Parties agree to implement the FCC's Order on Remand and Report and Order in CC Docket 96-98 and 99-68 released April 27, 2001 ("ISP Order on Remand"). The Parties further agree to amend this agreement, within sixty (60) days of execution, to incorporate language reflecting the FCC ISP Order on Remand. At such time as that amendment is finalized, the Parties agree to work cooperatively to "true-up" compensation amounts consistent with the terms of the amended language from the effective date of the FCC ISP Order on Remand to the date the amendment is finalized. Additionally, the Parties agree to apply a "LATAwide" local concept to this Attachment 3, meaning that traffic that has traditionally been treated as intraLATA toll traffic will now be treated as local for intercarrier compensation purposes, except for those calls that are originated or terminated through switched access arrangements as established by the ***** Shiroishi changes "ruling regulatory body" to "State Commission or FCC" ***** State Commission or FCC.
Peacock to Shiroishi July 19, 2001 2:21 a.m.	**5.3** 5.3.1 5.3.1.1	**Interconnection Compensation** <u>Compensation for Local Traffic</u> For the treatment of local and ISP-bound traffic in this Agreement, the Parties agree to implement the FCC's Order on Remand and Report and Order in CC Docket No. 96-98 and 99-68 released April 27, 2001 ("ISP Order on Remand").

		The Parties further agree to amend this agreement, within sixty (60) days of execution, to incorporate language reflecting the FCC ISP Order on Remand. At such time as that amendment finalized, the Parties agree to work cooperatively to "true-up" compensation amounts consistent with the terms of the amended language from the effective date of the FCC ISP Order on Remand to the date the amendment is finalized. *** **Following Underlined Sentences added by Peacock** *** <u>In no event shall this Agreement have any effect on the rates applicable to interconnection traffic and ISP traffic prior to the effective date of the FCC ISP Order or any claims by AT&T against BellSouth for non-payment of such charges. The rates applicable to ISP traffic under this Agreement pursuant to the FCC ISP Order shall in no event be deemed to apply retroactively prior to the effective date of the FCC ISP Order</u>. Additionally, the Parties agree to apply a "LATAwide" local concept to this Attachment 3, meaning that traffic that has traditionally been treated as intraLATA toll traffic will now be treated as local for intercarrier compensation purposes, except for those calls that are originated or terminated through switched access arrangements as established by the State Commission or FCC.
Shiroishi to Peacock July 19, 2001 9:59 a.m.	**5.3** 5.3.1 5.3.1.1	**Interconnection Compensation** <u>Compensation for Local Traffic</u> For the treatment of local and ISP-bound traffic in this Agreement, the Parties agree to implement the FCC's Order on Remand and Report and Order in CC Docket No. 96-98 and 99-68 released April 27, 2001 ("ISP Order on Remand"). The Parties further agree to amend this agreement, within sixty (60) days of execution, to incorporate language reflecting the FCC ISP Order on Remand. At such time as that amendment finalized, the Parties agree to work cooperatively to "true-up" compensation amounts consistent with the terms of the amended language from the effective date of the FCC ISP Order on Remand to the date the amendment is finalized. *** **Shiroishi Deletes two Sentences Added by Peacock on July 19, 2001, 2:21 a.m.** *** Additionally, the Parties agree to apply a "LATAwide" local concept to this Attachment 3, meaning that traffic that has traditionally been treated as intraLATA toll traffic will now be treated as local for intercarrier compensation purposes, except for those calls that are originated or terminated through switched access arrangements as established by the State Commission or FCC.

SWITCHED ACCESS TRAFFIC MATRIX

Shiroishi to Peacock July 11, 2001 6:21 p.m. 5.3.3	**Switched Access Traffic**. Switched Access Traffic is defined as telephone calls requiring local transmission or switching services for the purpose of the origination or termination of Telephone Toll Service. Switched Access Traffic includes, but is not limited to, the following types of traffic: Feature Group A, Feature Group B, Feature Group C, Feature Group D, toll free access (e.g., 800/877/888), 900 access, and their successors. The Parties have been unable to agree as to whether Voice over Internet Protocol (VOIP) transmissions which cross local calling area boundaries constitute Switched Access Traffic. Notwithstanding the foregoing, and without waiving any rights with respect to either Party's position as to the jurisdictional nature of VOIP, the Parties agree to abide by any effective and applicable FCC rules and orders regarding the nature of such traffic and the compensation payable by the Parties for such traffic, if any; provided however, that any VOIP transmission which originates in one local calling area and terminates in another local calling area (i.e., the end-to-end points of the call), shall not be compensated as Local Traffic.
Peacock to Shiroishi July 16, 2001 4:20 p.m. 5.3.3	**Switched Access Traffic**. Switched Access Traffic is defined as telephone calls requiring local transmission or switching services for the purpose of the origination or termination of *** **Peacock "Strike-Out" of Telephone Toll Service** *** ~~Telephone Toll Service~~. Switched Access Traffic includes, but is not limited to, the following types of traffic: Feature Group A, Feature Group B, Feature Group C, Feature Group D, toll free access (e.g., 800/877/888), 900 access, and their successors. The Parties have been unable to agree as to whether Voice over Internet Protocol (VOIP) transmissions which cross local calling area boundaries constitute Switched Access Traffic. Notwithstanding the foregoing, and without waiving any rights with respect to either Party's position as to the jurisdictional nature of VOIP, the Parties agree to abide by any effective and applicable FCC rules and orders regarding the nature of such traffic and the compensation payable by the Parties for such traffic, if any; ~~provided however, that any VOIP transmission which originates in one local calling area and terminates in another local calling area (i.e., the end-to-end points of the call), shall not be compensated as Local Traffic.~~
Shiroishi to Peacock July 17, 2001 12:54 p.m. 5.3.3	**Switched Access Traffic**. Switched Access Traffic is defined as telephone calls requiring local transmission or switching services for the purpose of the origination or termination of ~~Telephone Toll Service~~. Switched Access Traffic includes, but is not limited to, the following types of traffic: Feature Group A, Feature Group B, Feature Group C, Feature Group D, toll free access (e.g., 800/877/888), 900 access, and their successors. The Parties have been unable to agree as to whether Voice over Internet Protocol (VOIP) transmissions which cross local calling area boundaries constitute Switched Access Traffic. Notwithstanding the foregoing, and without waiving any rights with respect to either Party's position as to the jurisdictional nature of VOIP, the Parties agree to abide by any effective and applicable FCC rules and orders regarding the nature of such traffic and the compensation payable by the Parties for such traffic, if any; provided however, that any VOIP transmission which originates in one LATA and terminates in

	another LATA (i.e., the end-to-end points of the call), shall not be compensated as Local Traffic.*** **Shiroishi Adds Last Sentence** This Section [redacted].2 is interrelated to Section 5.3.1.2.***
Shiroishi to Peacock July 18, 2001 7:27 p.m. 5.3.3	**Switched Access Traffic**. Switched Access Traffic is defined as telephone calls requiring local transmission or switching services for the purpose of the origination or termination of *** **Shiroishi adds "IntraLATA Intrastate, Intrastate InterLATA and Interstate InterLATA"** *** IntraLATA Intrastate, Intrastate InterLATA and Interstate InterLATA traffic. *** **Note: Telephone Toll Service deleted from July 16, 2001, 4:20 p.m. "red-line."** *** Switched Access Traffic includes, but is not limited to, the following types of traffic: Feature Group A, Feature Group B, Feature Group D, toll free access (e.g., 800/877/888), 900 access, and their successors. The Parties have been unable to agree as to whether Voice over Internet Protocol (VOIP) transmissions which cross local calling area boundaries constitute Switched Access Traffic. Notwithstanding the foregoing, and without waiving any rights with respect to either Party's position as to the jurisdictional nature of VOIP, the Parties agree to abide by any effective and applicable FCC rules and orders regarding the nature of such traffic and the compensation payable by the Parties for such traffic, if any; provided however, that any VOIP transmission which originates in one LATA and terminates in another LATA (i.e., the end-to-end points of the call), shall not be compensated as Local Traffic. This Section is interrelated to Section 5.3.1.1.
Peacock to Shiroishi July 19, 2001 2:21 a.m. 5.3.3	**Switched Access Traffic**. Switched Access Traffic is defined as telephone calls requiring local transmission or switching services for the purpose of the origination or termination of *** **Peacock Highlights IntraLATA Intrastate For Discussion** *** [redacted], *** **Peacock moves following language up in the Section.** *** (If BellSouth or AT&T is the other Party's end user's presubscribed interexchange carrier or if an end user uses BellSouth or AT&T as an interexchange carrier on a 101XXX basis, BellSouth or AT&T will charge the other Party the appropriate tariff charges for originating swiched access services.) ~~calls that are routed over switched access trunk groups.~~ Intrastate InterLATA and Interstate InterLATA traffic. Switched Access Traffic includes, but is not limited to, the following types of traffic: Feature Group A, Feature Group B, Feature Group D, toll free access (e.g., 800/877/888), 900 access, and their successors. ~~(If BellSouth or AT&T is the other Party's end user's presubscribed interexchange carrier or if an end user uses BellSouth or AT&T as an interexchange carrier on a 101XXX basis, BellSouth or AT&T will charge the other Party the appropriate tariff charges for originating switched access services.)~~ However, ~~T~~the Parties have been unable to agree as to whether Voice over Internet Protocol (VOIP) transmissions which cross local calling area boundaries constitute Switched Access Traffic. Notwithstanding the foregoing, and without waiving any rights with respect to either Party's position as to the jurisdictional nature of VOIP, the Parties agree to abide by any effective and applicable FCC rules and orders regarding the nature of such traffic and the compensation payable by the Parties for such traffic, if any; provided however, that any VOIP transmission which originates in one LATA and terminates in another LATA (i.e., the end-to-end points of the call), shall not be

	compensated as Local Traffic. This Section 5.3.2 is interrelated to Section 5.3.1.1.
Shiroishi to Peacock July 19, 2001 9:59 a.m. 5.3.3	**Switched Access Traffic**. Switched Access Traffic is defined as telephone calls requiring local transmission or switching services for the purpose of the origination or termination of *** **Shiroishi "Strikes Out" IntraLATA Intrastate** *** ~~IntraLATA Intrastate~~, Intrastate InterLATA and Interstate InterLATA traffic. Switched Access Traffic includes, but is not limited to, the following types of traffic: Feature Group A, Feature Group B, Feature Group D, toll free access (e.g., 800/877/888), 900 access, and their successors. Additionally, if BellSouth or AT&T is the other Party's end user's presubscribed interexchange carrier or if an end user uses BellSouth or AT&T as an interexchange carrier on a 101XXX basis, BellSouth or AT&T will charge the other Party the appropriate tariff charges for originating switched access services. The Parties have been unable to agree as to whether Voice over Internet Protocol (VOIP) transmissions which cross local calling area boundaries constitute Switched Access Traffic. Notwithstanding the foregoing, and without waiving any rights with respect to either Party's position as to the jurisdictional nature of VOIP, the Parties agree to abide by any effective and applicable FCC rules and orders regarding the nature of such traffic and the compensation payable by the Parties for such traffic, if ~~any;~~any; provided however, that any VOIP transmission which originates in one LATA and terminates in another LATA (i.e., the end-to-end points of the call), shall not be compensated as Local Traffic. This Section is interrelated to Section 5.3.1.1.

INTRALATA TOLL TRAFFIC MATRIX

Shiroishi to Peacock July 11, 2001 6:21 a.m.	5.4 5.4.1 5.4.2	Compensation for IntraLATA Toll Traffic IntraLATA Toll Traffic. IntraLATA Toll Traffic is defined as any telephone call that originates and terminates in the same LATA and is billed by the originating Party as a toll call. Compensation for IntraLATA Toll Traffic. For terminating its IntraLATA Toll Traffic on the other Party's network, the originating Party will pay the terminating Party's intrastate or interstate terminating switched access tariff rates as set forth in the effective intrastate or interstate access services tariff, whichever is appropriate. The appropriate charges will be determined by the routing of the call. If BellSouth or AT&T is the other Party's end user's presubscribed interexchange carrier or if an end user uses BellSouth or AT&T as an interexchange carrier on a 101XXXX basis, BellSouth or AT&T will charge the other Party the appropriate tariff charges for originating switched access services.
Shiroishi to Peacock July 18, 2001 7:27 a.m.	~~5.4~~ ~~5.4.1~~ ~~5.4.2~~ 5.3.9	***** Shiroishi "Strikes-Out" Following Language ***** ~~Compensation for IntraLATA Toll Traffic~~ ~~IntraLATA Toll Traffic. IntraLATA Toll Traffic is defined as any telephone call that originates and terminates in the same LATA and is billed by the originating Party as a toll call.~~ ~~Compensation for IntraLATA Toll Traffic.~~ ***** Shiroishi "Strikes-Out" Following Language ***** ~~For terminating its IntraLATA Toll Traffic on the other Party's network, the originating Party will pay the terminating Party's intrastate or interstate terminating switched access tariff rates as set forth in the effective intrastate or interstate access services tariff, whichever is appropriate. The appropriate charges will be determined by the routing of the call.~~ If BellSouth or AT&T is the other Party's end user's presubscribed interexchange carrier or if an end user uses BellSouth or AT&T as an interexchange carrier on a 101XXXX basis, BellSouth or AT&T will charge the other Party the appropriate tariff charges for originating switched access services.
Peacock to Shiroishi July 19, 2001 2:21 a.m.	~~5.4~~ ~~5.4.1~~ ~~5.4.2~~ 5.3.9	~~Compensation for IntraLATA Toll Traffic~~ ~~IntraLATA Toll Traffic. IntraLATA Toll Traffic is defined as any telephone call that originates and terminates in the same LATA and is billed by the originating Party as a toll call.~~ ~~Compensation for IntraLATA Toll Traffic. For terminating its IntraLATA Toll Traffic on the other Party's network, the originating Party will pay the terminating Party's intrastate or interstate terminating switched access tariff rates as set forth in the effective intrastate or interstate access services tariff, whichever is appropriate. The appropriate charges will be determined by the routing of the call.~~***** Peacock "Strike-Out" Remaining Language ***** ~~If BellSouth or AT&T is the other Party's end user's presubscribed interexchange carrier~~

		~~or if an end user uses BellSouth or AT&T as an interexchange carrier on a 101XXXX basis, BellSouth or AT&T will charge the other Party the appropriate tariff charges for originating switched access services.~~
Shiroishi to Peacock July 19, 2001 9:59 a.m.	~~5.4~~ ~~5.4.1~~ ~~5.4.2~~	~~Compensation for IntraLATA Toll Traffic~~ ~~IntraLATA Toll Traffic. IntraLATA Toll Traffic is defined as any telephone call that originates and terminates in the same LATA and is billed by the originating Party as a toll call.~~ ~~Compensation for IntraLATA Toll Traffic. For terminating its IntraLATA Toll Traffic on the other Party's network, the originating Party will pay the terminating Party's intrastate or interstate terminating switched access tariff rates as set forth in the effective intrastate or interstate access services tariff, whichever is appropriate. The appropriate charges will be determined by the routing of the call. If BellSouth or AT&T is the other Party's end user's presubscribed interexchange carrier or if an end user uses BellSouth or AT&T as an interexchange carrier on a 101XXXX basis, BellSouth or AT&T will charge the other Party the appropriate tariff charges for originating switched access services.~~

Exhibit 1 of Exh. 11

FLORIDA PUBLIC SERVICE COMMISSION
DOCKET NO. 020919-TP EXHIBIT NO. 11
COMPANY/ WITNESS: AT+T · Direct JAKI, 2, +3,
DATE: 5-07-03

AGREEMENT

between

BellSouth Telecommunications, Inc.

and AT&T Communications of the Southern States, Inc.

Effective Date: June 10, 1997

FLORIDA

TABLE OF CONTENTS

Section

AGREEMENT

PREFACE

RECITALS

DEFINITIONS and ACRONYMS

GENERAL TERMS AND CONDITIONS

1. Provision of Local Service and Unbundled Network Elements
2. Term of Agreement
3. Termination of Agreement; Transitional Support
4. Good Faith Performance
5. Option to Obtain Local Services, Network Elements and Combinations Under Other Agreements
6. Responsibility of Each Party
7. Governmental Compliance
8. Responsibility For Environmental Contamination
9. Regulatory Matters
10. Liability and Indemnity
11. Audits and Inspections
12. Remedies for Failure to Meet DMOQs
13. Customer Credit History - DELETED
14. Force Majeure
15. Certain Federal, State and Local Taxes
16. Alternative Dispute Resolution
17. Notices

18. Confidentiality and Proprietary Information

19. Branding

20. Directory Listings Requirements

21. Subscriber List Information/Local Number Portability

22. Miscellaneous

PART I: LOCAL SERVICES RESALE

23. Telecommunications Services Provided for Resale

24. General Terms and Conditions for Resale

25. Requirements for Specific Services

26. DELETED

27. Support Functions

28. Service Functions

PART II: UNBUNDLED NETWORK ELEMENTS

29. Introduction

30. Unbundled Network Elements

PART III: ANCILLARY FUNCTIONS

31. Introduction

32. BellSouth Provision of Ancillary Functions

33. Standards for Ancillary Functions

PART IV: PRICING

34. General Principles

35. Local Service Resale

36. Unbundled Network Elements

37. Compensation For Call and Transport Termination

38. Ancillary Functions

39. Local Number Portability

40. Recorded Usage Data

41. Electronic Interfaces

a. TABLE 1 - Unbundled Network Elements

b. TABLE 2 - Physical and Virtual Collocation

c. Virtual Collocation

d. TABLE 3 - Rights of Way

e. TABLE 4 - Pole Attachments

f. TABLE 5 - Local Number Portability

g. TABLE 6 - Recorded Usage Data

SIGNATURE

PUC APPROVAL ORDER

AMENDMENT – 7/14/99

ATTACHMENTS

Attachment 1	Alternative Dispute Resolution
Attachment 2	Services Description: Unbundled Network Elements
Attachment 3	Service Description: Ancillary Functions
Attachment 4	Provisioning and Ordering
Attachment 5	Maintenance
Attachment 6	Connectivity Billing and Recording
Attachment 7	Provision of Customer Usage Data
Attachment 8	Local Number Portability
Attachment 9	Network Security
Attachment 10	Acronyms
Attachment 11	Definitions
Attachment 12	Performance Measurement
Attachment 13	BAPCO Agreement - (NOT AVAILABLE)
Attachment 14	Bona Fide Request Process
Attachment 15	Interface Requirements for Ordering and Provisioning, Maintenance and Repair, and Pre-Ordering

AGREEMENT

PREFACE

This Agreement, which shall become effective as of the 10th day of June, 1997, is entered into by and between AT&T Communications of the Southern States, Inc., a New York Corporation, having an office at 1200 Peachtree Street, N.E., Atlanta, Georgia 30309, on behalf of itself, its successors and assigns, (individually and collectively "AT&T"), and BellSouth Telecommunications, Inc. ("BellSouth"), a Georgia corporation, on behalf of itself, its successors and assigns, having an office at 675 West Peachtree Street, Atlanta, Georgia 30375.

RECITALS

WHEREAS, The Telecommunications Act of 1996 (the "Act") was signed into law on February 8, 1996; and

WHEREAS, the Act places certain duties and obligations upon, and grants certain rights to Telecommunications Carriers; and

WHEREAS, BellSouth is an Incumbent Local Exchange Carrier; and

WHEREAS, BellSouth is willing to provide Telecommunications Services for resale, Interconnection, Unbundled Network Elements and Ancillary Functions which include, but are not limited to, access to poles, ducts, conduits and rights-of-way, and collocation of equipment at BellSouth's Premises on the terms and subject to the conditions of this Agreement; and

WHEREAS, AT&T is a Telecommunications Carrier and has requested that BellSouth negotiate an Agreement with AT&T for the provision of Interconnection, Unbundled Network Elements, and Ancillary Functions as well as Telecommunications Services for resale, pursuant to the Act and in conformance with BellSouth's duties under the Act,

NOW, THEREFORE, in consideration of the promises and the mutual covenants of this Agreement, AT&T and BellSouth hereby agree as follows:

DEFINITIONS and ACRONYMS

For purposes of this Agreement, certain terms have been defined in Attachment 11 and elsewhere in this Agreement to encompass meanings that may differ from, or be in addition to, the normal connotation of the defined word. Unless the context clearly indicates otherwise, any term defined or used in the singular shall include the plural. The words "shall" and "will" are used interchangeably throughout this Agreement and the use of either connotes a mandatory requirement. The use of one or the other shall not mean a different degree of right or obligation for either Party. A defined word intended to convey its special meaning is capitalized when used. Other terms that are capitalized, and not defined in this Agreement, shall have the meaning in the Act. For convenience of reference, Attachment 10 provides a list of acronyms used throughout this Agreement.

GENERAL TERMS AND CONDITIONS

1. **Provision of Local Service and Unbundled Network Elements**

This Agreement sets forth the terms, conditions and prices under which BellSouth agrees to provide (a) Telecommunications Service that BellSouth currently provides, or may offer hereafter for resale along with the Support Functions and Service Functions set forth in this Agreement (hereinafter collectively referred to as "Local Services") and (b) certain unbundled Network Elements, or combinations of such Network Elements ("Combinations") and (c) Ancillary Functions to AT&T (Local Services, Network Elements, Combinations, and Ancillary Functions, collectively referred to as "Services and Elements"). This Agreement also sets forth the terms and conditions for the interconnection of AT&T's network to BellSouth's network and the mutual and reciprocal compensation for the transport and termination of telecommunications. BellSouth may fulfill the requirements imposed upon it by this Agreement by itself or, in the case of directory listings for white pages may cause BellSouth Advertising and Publishing Company ("BAPCO") to take such actions to fulfill BellSouth's responsibilities. This Agreement includes Parts I through IV, and their Attachments 1 - 15 and all accompanying Appendices and Exhibits. Unless otherwise provided in this Agreement, BellSouth will perform all of its obligations hereunder throughout its entire service area. The Parties further agree to comply with all provisions of the Act, including Section 271(e) (1).

1.A The Services and Elements provided pursuant to this Agreement may be connected to other Services and Elements provided by BellSouth or to any Services and Elements provided by AT&T itself or by any other vendor. AT&T may purchase unbundled Network Elements for the purpose of combining Network Elements in any manner that is technically feasible, including recreating existing BellSouth services.

1.1 Subject to the requirements of this Agreement, AT&T may, at any time add, relocate or modify any Services and Elements purchased hereunder. Requests for additions or other changes shall be handled pursuant to the Bona Fide Request Process provided in Attachment 14. Terminations of any Services or Elements shall be handled pursuant to Section 3.1 of the General Terms and Conditions of this Agreement.

1.2 BellSouth shall not discontinue any Network Element, Ancillary Function, or Combination provided hereunder without the prior written consent of AT&T. Such consent shall not be unreasonably withheld. BellSouth shall not discontinue any Local Service provided hereunder unless BellSouth provides AT&T prior written notice of intent to discontinue any such service. BellSouth agrees to make any such service available to AT&T for resale to AT&T's Customers who are subscribers of such services from AT&T until the date BellSouth discontinues any such service for BellSouth's customers. BellSouth also agrees to adopt a reasonable, nondiscriminatory transition schedule for BellSouth or AT&T Customers who may be purchasing any such service.

1.3 This Agreement may be amended from time to time as mutually agreed in writing between the Parties. The Parties agree that neither Party will take any action to proceed, nor shall either have any obligation to proceed on a requested change unless and until a modification to this Agreement is signed by authorized representatives of each Party.

2. **Term of Agreement**

2.1 When executed by authorized representatives of BellSouth and AT&T, this Agreement shall become effective as of the Effective Date stated above, and shall expire three (3) years from the Effective Date unless terminated in accordance with the provisions of Section 3.2 of the General Terms and Conditions.

2.2 No later than one hundred and eighty (180) days prior to the expiration of this Agreement, the Parties agree to commence negotiations with regard to the terms, conditions, and prices of a follow-on agreement for the provision of Services and Elements to be effective on or before the expiration date of this Agreement ("Follow-on Agreement"). The Parties further agree that any

such Follow-on Agreement shall be for a term of no less than three (3) years unless the Parties agree otherwise.

2.3 If, within one hundred and thirty-five (135) days of commencing the negotiation referenced to Section 2.2, above, the Parties are unable to satisfactorily negotiate new terms, conditions and prices, either Party may petition the Commission to establish an appropriate Follow-on Agreement pursuant to 47 U.S.C. § 252. The Parties agree that in such event they shall encourage the Commission to issue its order regarding such Follow-on Agreement no later than the expiration date of this Agreement. The Parties further agree that in the event the Commission does not issue its order by the expiration date of this Agreement, or if the Parties continue beyond the expiration date of this Agreement to negotiate without Commission intervention, the terms, conditions and prices ultimately ordered by the Commission, or negotiated by the Parties, will be effective, retroactive to the day following the expiration date of this Agreement . Until the Follow-on Agreement becomes effective, BellSouth shall provide Services and Elements pursuant to the terms, conditions and prices of this Agreement that are then in effect. Prior to filing a Petition pursuant to this Section 2.3, the Parties agree to utilize the informal dispute resolution process provided in Section 3 of Attachment 1.

3. **Termination of Agreement; Transitional Support**

3.1 AT&T may terminate any Local Service(s), Network Element(s), Combination(s), or Ancillary Function(s) provided under this Agreement upon thirty (30) days written notice to BellSouth unless a different notice period or different conditions are specified for termination of such Local Services(s), Network Element(s), or Combination(s) in this Agreement or pursuant to any applicable tariff, in which event such specific period or conditions shall apply, provided such period or condition is reasonable, nondiscriminatory and narrowly tailored. Where there is no such different notice period or different condition specified, AT&T's liability shall be limited to payment of the amounts due for any terminated Local Service(s), Network Element(s), Combination(s) or Ancillary Service provided up to and including the date of termination. Notwithstanding the foregoing, the provisions of section 10, infra, shall still apply. Upon termination, BellSouth agrees to cooperate in an orderly and efficient transition to AT&T or another vendor such that the level and quality of the Services and Elements is not degraded and to exercise its best efforts to effect an orderly and efficient transition. AT&T agrees that it may not terminate the entire Agreement pursuant to this section.

3.2 If a Party is in breach of a material term or condition of this Agreement ("Defaulting Party"), the other Party shall provide written notice of such breach to the Defaulting Party. The Defaulting Party shall have ten (10) business days from receipt of notice to cure the breach. If the breach is not cured, the Parties shall follow the dispute resolution procedure of Section 16 of the General Terms and Conditions and Attachment 1. If the Arbitrator determines that a breach has occurred and the Defaulting Party fails to comply with the decision of the Arbitrator within the time period provided by the Arbitrator (or a period of thirty (30) days if no time period is provided for in the Arbitrator's order), this Agreement may be terminated in whole or part by the other Party upon sixty (60) days prior written notice.

4. **Good Faith Performance**

In the performance of their obligations under this Agreement, the Parties shall act in good faith and consistently with the intent of the Act. Where notice, approval or similar action by a Party is permitted or required by any provision of this Agreement, (including, without limitation, the obligation of the Parties to further negotiate the resolution of new or open issues under this Agreement) such action shall not be unreasonably delayed, withheld or conditioned.

5. **Option to Obtain Local Services, Network Elements and Combinations Under Other Agreements**

AGREEMENT

PREFACE

This Agreement, which shall become effective as of the 26th day of October 26, 2001, is entered into by and between AT&T Communications of the Southern States, Inc., a New York corporation, having an office at 1200 Peachtree Street, N.E., Atlanta, Georgia, 30309, on behalf of itself and its Affiliates (individually and collectively "AT&T"), and BellSouth Telecommunications, Inc. ("BellSouth"), a Georgia corporation, having an office at 675 West Peachtree Street, Atlanta, Georgia 30375, on behalf of itself and its successors and assigns.

RECITALS

WHEREAS, The Telecommunications Act of 1996 (the "Act") was signed into law on February 8, 1996; and

WHEREAS, the Act places certain duties and obligations upon, and grants certain rights to Telecommunications Carriers; and

WHEREAS, BellSouth is an Incumbent Local Exchange Carrier; and

WHEREAS, AT&T is a Telecommunications Carrier and has requested that BellSouth negotiate an Agreement pursuant to the Act,

NOW, THEREFORE, in consideration of the promises and the mutual covenants of this Agreement, AT&T and BellSouth hereby agree as follows:

DEFINITIONS and ACRONYMS

For purposes of this Agreement, certain terms have been defined in the body of the Agreement to encompass meanings that may differ from, or be in addition to, the normal connotation of the defined word. Unless the context clearly indicates otherwise, any term defined or used in the singular shall include the plural. The words "shall" and "will" are used interchangeably throughout this Agreement and the use of either connotes a mandatory requirement. The use of one or the other shall not mean a different degree of right or obligation for either Party. A defined word intended to convey its special meaning is capitalized when used. Other terms that are capitalized, and not defined in this Agreement, shall have the meaning in the Act. For convenience of reference, Attachment 11 provides a list of acronyms used throughout this Agreement.

18. Confidentiality and Proprietary Information 25

19. Branding 27

20. Directory Listings Requirements 28

21. Insurance Requirements 30

22. Costs 30

23. Disaster Recovery 30

24. Miscellaneous 31

25. Reservation of Rights 35

ATTACHMENTS

Attachment 1	Resale
Attachment 2	Unbundled Network Elements
Attachment 3	Local Interconnection
Attachment 4	Collocation
Attachment 5	Access to Numbers and Number Portability
Attachment 6	Connectivity Billing and Recording
Attachment 7	Interface Requirements for Ordering and Provisioning, Maintenance and Repair, and Pre-Ordering
Attachment 8	Rights of Way (ROW), Conduits, and Pole Attachments
Attachment 9	Performance Measures
Attachment 10	Bona Fide Request/New Business Request Process
Attachment 11	Acronyms
Attachment 12	Network Security
Attachment 13	BAPCO Agreement
Exhibit A	Disaster Recovery

TABLE OF CONTENTS

Section **Page**

AGREEMENT 4

PREFACE 4

RECITALS 4

DEFINITIONS and ACRONYMS 4

GENERAL TERMS AND CONDITIONS 5

1. Provision of Local Service and Unbundled Network Elements 5
2. Term of Agreement 6
3. Termination of Agreement; Transitional Support 6
4. Good Faith Performance 7
5. Option to Obtain Services and Elements and Combinations Under Other Agreements 7
6. Responsibility of Each Party 8
7. Governmental Compliance 8
8. Responsibility For Environmental Contamination 9
9. Regulatory Matters 11
10. Liability and Indemnity 12
11. Intellectual Property Rights and Indemnification 14
12. Audits and Inspections 17
13. Performance Measurement 19
14. Force Majeure 19
15. Certain Federal, State and Local Taxes 20
16. Dispute Resolution Process 24
17. Notices 24

AGREEMENT

between

BellSouth Telecommunications, Inc.

and

AT&T Communications of the Southern States, Inc.

FLORIDA

4.14 Interference or Impairment

4.14.1 Within three (3) business days of receipt of notification of blocking of traffic originated within the other Party's network, the Parties shall determine and begin work to implement reasonable corrective measures in a manner consistent with industry practices.

4.15 Local Dialing Parity

4.15.1 BellSouth and AT&T shall provide local and toll dialing parity to each other with no unreasonable dialing delays. Dialing parity shall be provided for all originating telecommunications services that require dialing to route a call. BellSouth and AT&T shall permit similarly situated telephone exchange service end users to dial the same number of digits to make a local telephone call notwithstanding the identity of the end user's or the called party's telecommunications service provider.

5. NETWORK MAINTENANCE

5.1 Outage Repair Standard

5.1.1 In the event of an outage or trouble in any arrangement, facility, or service being provided by BellSouth hereunder, BellSouth will follow procedures for isolating and clearing the outage or trouble that are no less favorable than those that apply to comparable arrangements, facilities, or services being provided by BellSouth to itself, Affiliate or any other carrier whose network is connected to that of BellSouth.

5.2 BellSouth will use best efforts to provide AT&T with at least thirty (30) days advance, written notice of scheduled maintenance activity. BellSouth may expedite or delay scheduled maintenance as a result of unscheduled maintenance or other unforeseen events. In those instances where BellSouth will not perform scheduled maintenance at the announced times, BellSouth will provide AT&T with as much notice as is reasonably possible concerning the changed schedule. For major, long term scheduled events, (i.e., switch software/processor updates or software upgrades/new releases to the Sonet transport network elements) BellSouth shall provide AT&T with as much advance, written notice as possible.

5.3 Interconnection Compensation

5.3.1 Compensation for Local Traffic

5.3.1.1 For the treatment of local and ISP-bound traffic in this Agreement, the Parties agree to implement the FCC's Order on Remand and Report

and Order in CC Docket No. 96-98 and 99-68 released April 27, 2001 ("ISP Order on Remand"). The Parties further agree to amend this agreement, within sixty (60) days of execution, to incorporate language reflecting the FCC ISP Order on Remand. At such time as that amendment is finalized, the Parties agree to work cooperatively to "true-up" compensation amounts consistent with the terms of the amended language from the effective date of the FCC ISP Order on Remand to the date the amendment is finalized. In this Section, the Parties express their intent to file negotiated language to incorporate the FCC's ISP Order on Remand. If the Parties are unable to agree on this language addressing this issue by the time the language is due to be filed, either party may petition the Florida Public Service Commission to resolve the dispute between the Parties as to the appropriate language addressing this issue. Additionally, the Parties agree to apply a "LATAwide" local concept to this Attachment 3, meaning that traffic that has traditionally been treated as intraLATA toll traffic will now be treated as local for intercarrier compensation purposes, except for those calls that are originated or terminated through switched access arrangements as established by the State Commission or FCC.

5.3.1.2 The Parties recognize and agree that the compensation for the transport and termination of Local Traffic is intended to allow each Party to recover costs associated with such traffic. The Parties recognize and agree that such compensation will not be billed and shall not be paid for calls where a Party sets up a call, or colludes with a third party to set up a call, to the other Party's network for the purpose of receiving reciprocal compensation, and not for the purposes of providing a telecommunications service to an end user.

5.3.2 The Parties shall provide for the mutual and reciprocal recovery of the costs for the network facilities utilized in transporting and terminating local traffic on each other's network. The Parties agree that charges for transport and termination of calls on their respective networks are as set forth in Exhibit A to this Attachment.

5.3.2.1 For the purposes of this Attachment 3, Common (Shared) Transport is defined as the transport of one Party's traffic by the other Party over the other Party's common (shared) facilities between the other Party's tandem switch and end office switch and/or between the other Party's tandem switches.

5.3.2.2 For the purposes of this Attachment 3, Tandem Switching is defined as the function that establishes a communications path between two switching offices through a third switching office (the Tandem switch).

5.3.2.3 For the purposes of this Attachment 3, End Office Switching is defined as the function that establishes a communications path between the trunk side and line side of the End Office switch.

5.3.2.4 In the event that AT&T elects to offer service within a LATA using a switch located in another LATA, AT&T agrees to provide the transport for both Parties' traffic between the remote AT&T switch and a point (i.e., a facility point of presence) within the LATA in which AT&T offers service. Such facility point of presence shall be deemed to be an AT&T switch for the purposes of this Attachment.

5.3.3 Switched Access Traffic. Switched Access Traffic is defined as telephone calls requiring local transmission or switching services for the purpose of the origination or termination of Intrastate InterLATA and Interstate InterLATA traffic. Switched Access Traffic includes, but is not limited to, the following types of traffic: Feature Group A, Feature Group B, Feature Group D, toll free access (e.g., 800/877/888), 900 access, and their successors. Additionally, if BellSouth or AT&T is the other Party's end user's presubscribed interexchange carrier or if an end user uses BellSouth or AT&T as an interexchange carrier on a 101XXXX basis, BellSouth or AT&T will charge the other Party the appropriate tariff charges for originating switched access services. The Parties have been unable to agree as to whether Voice over Internet Protocol ("VOIP") transmissions which cross local calling area boundaries constitute Switched Access Traffic. Notwithstanding the foregoing, and without waiving any rights with respect to either Party's position as to the jurisdictional nature of VOIP, the Parties agree to abide by any effective and applicable FCC rules and orders regarding the nature of such traffic and the compensation payable by the Parties for such traffic, if any; provided however, that any VOIP transmission which originates in one LATA and terminates in another LATA (i.e., the end-to-end points of the call), shall not be compensated as Local Traffic. This Section is interrelated to Section 5.3.1.1.

5.3.4 The Parties have been unable to agree as to the appropriate compensation for calls which originate in a LATA and terminate to a physical location outside of that LATA but to a number assigned to a rate center within that LATA. However, without prejudice to either Party's position concerning the application of reciprocal compensation or access charges to such traffic, the Parties agree for purposes of this Agreement only and subject to the Parties' agreement to the terms of Sections 5.3.1.1 and 5.3.3, and on an interim basis until the FCC issues an Order addressing this issue, neither Party shall bill the other reciprocal compensation, intercarrier compensation or switched access in connection with the exchange of any traffic as described in

FIRST AMENDMENT
TO THE
INTERCONNECTION AGREEMENT BETWEEN
AT&T COMMUNICATIONS OF THE SOUTHERN STATES, INC.
AND
BELLSOUTH TELECOMMUNICATIONS, INC.
FOR THE STATE OF FLORIDA
DATED OCTOBER 26, 2001

Pursuant to this Agreement, ("Amendment") AT&T Communications of the Southern States, Inc. ("AT&T") and BellSouth Telecommunications, Inc. ("BellSouth"), hereinafter referred to collectively as the "Parties," hereby agree to amend that certain Interconnection Agreement between the Parties dated October 26, 2001 ("Interconnection Agreement").

NOW THEREFORE, in consideration of the mutual provisions contained herein and other good and valuable consideration, the receipt and sufficiency of which are hereby acknowledged, the Parties hereby covenant and agree as follows:

Pursuant to this Amendment, the Parties hereby agree to amend the Interconnection Agreement to reflect the following:

1. The Parties agree to delete Section 5.3 of Attachment 3 in its entirety and replace it with the provisions set forth in Exhibit 1 of this Amendment, attached hereto and incorporated herein by this reference.

2. The Parties agree to delete Exhibit A of Attachment 3 in its entirety and replace it with a new Exhibit A, set forth in Exhibit 2 of this Amendment, attached hereto and incorporated herein by this reference.

3. The Parties agree to delete Section 3.7.4 of Attachment 2 in its entirety and replace it with the following provision:

   3.7.4 AT&T or BellSouth ("Petitioner") shall notify the other Party ("Respondent") in writing via AT&T's Local Services and Access Management ("LSAM") Group or BellSouth's AT&T Account Team ("Account Team") of the needed areas of improvement and any proposed changes to the current hot cut process provided for in the Interconnection Agreement ("Agreement").

3.7.4.1 The Respondent shall submit a written response to Petitioner within fifteen (15) calendar days of the requested change.

3.7.4.2 Upon receipt of the response, Petitioner shall either:

3.7.4.2.1 schedule a meeting between representatives of each party with authority to identify areas of improvement and, if applicable, to develop and implement process changes resulting from such mutual cooperation; or

3.7.4.2.2 accept all proposed changes by Respondent, if any, and notify Respondent with a written response within seven (7) calendar days that the changes, if any, will be accepted.

3.7.4.3 If Section 3.7.4.2.1 is implemented, the Parties agree to negotiate the requested change in good faith within ninety (90) calendar days of the day Petitioner requested the proposed change.

3.7.4.4 A mutually agreed upon process under either Section 3.7.4.2.1 or Section 3.7.4.2.2 shall be implemented upon a mutually agreed upon timeframe.

3.7.4.5 Should the Parties be unable to agree on a mutually acceptable change to the process and or an agreeable date to implement such change within one hundred and twenty (120) days of the day Petitioner requested the proposed change, the Parties agree to resolve any disputes in accordance with the dispute resolution process provided in Section 16 of the General Terms and Conditions of this Agreement.

3.7.4.6 At no such time, shall either Party waive any rights that it may have with respect to the Agreement in its entirety.

3.7.4.7 Nothing in this Process Improvement Plan is deemed to amend or modify any other terms in the Interconnection Agreement.

4. The Parties agree to add provisions consistent with the FCC's 4th Report and Order, dated August 8, 2000, to delete Attachment 4 –Collocation and replace in its entirety with a new Attachment 4 –Collocation, attached hereto as Exhibit 3 and incorporated herein by reference. Except as otherwise set forth herein, the original Exhibits to Attachment 4 are unaffected by this Amendment and shall remain in full force and effect.

5. The Parties further agree to make the following revisions to Attachment 4-Collocation Rates Exhibit B, attached herein as Exhibit 4:

   A. Delete the Co-Carrier cross connect rates and replace it with the rates set forth in Exhibit 4 to this Amendment, attached hereto and incorporated herein by reference.

   B. Delete the USOC description and abbreviation of PE1PL for -48V DC power and replace with the new USOC description and abbreviation of PE1FJ for the –48V DC power as set forth in Exhibit 4 to this Amendment, attached hereto and incorporated herein by reference.

   C. Delete the USOC description and abbreviation of XXXX for -48V DC power and replace with the new USOC description and abbreviation of PE1PL for the –48V DC power as set forth in Exhibit 4 to this Amendment, attached hereto and incorporated herein by reference.

6. AT&T has changed the name of said business to AT&T Communications of the Southern States, LLC.

7. The Parties agree the name of AT&T Communications of the Southern States, Inc. is hereby deleted throughout the Interconnection Agreement and replace it with AT&T Communications of the Southern States, LLC ("AT&T").

8. All of the other provisions of the Interconnection Agreement, dated October 26, 2001, shall remain in full force and effect.

9. Either or both of the Parties is authorized to submit this Amendment to the respective Public Service Commission for approval subject to Section 252(e) of the Federal Telecommunications Act of 1996.

IN WITNESS WHEREOF, the Parties hereto have caused this Amendment to be executed by their respective duly authorized representatives on the date indicated below.

AT&T Communications of the Southern States, Inc.

By: Bill C. Peacock

Name: Bill C. Peacock

Title: Director - Local Services & Access Management

Date: 4-18-02

BellSouth Telecommunications, Inc.

By:

Name: Jerry Hendrix

Title: AVP Interconnection Scs. Mktg.

Date: 4/18/02

Exhibit 1

5.3 Interconnection Compensation

5.3.1 Intercarrier Compensation for Call Transport and Termination of Local and ISP-bound Traffic

5.3.1.1 The Parties agree to apply a "LATAwide" local concept to this Attachment 3, meaning that traffic that has traditionally been treated as intraLATA toll traffic will now be treated as local for intercarrier compensation purposes, except for those calls that are originated or terminated through switched access arrangements as established by the State Commission or FCC. Nothing in this Agreement shall be construed in any way to constrain either Party's choices regarding the size of the local calling areas that it may establish for its end users.

5.3.1.2 The Parties recognize and agree that the compensation for the transport and termination of Local Traffic is intended to allow each Party to recover costs associated with such traffic. The Parties recognize and agree that such compensation will not be billed and shall not be paid for calls where a Party sets up a call, or colludes with a third party to set up a call, to the other Party's network for the purpose of receiving reciprocal compensation, and not for the purposes of providing a telecommunications service to an end user.

5.3.2 ISP-bound Traffic is defined as calls to an information service provider or Internet service provider ("ISP") that are dialed by using a local dialing pattern (7 or 10 digits) by a calling party in one LATA to an ISP server or modem in the same LATA and is a subset of "information access". Information access is defined as the provision of specialized exchange telecommunications services in connection with the origination, termination, transmission, switching, forwarding or routing of telecommunications traffic to or from the facilities of a provider of information services. ISP-bound Traffic is not Local Traffic or IP Telephony as set forth in 5.3.10 of this agreement, subject to reciprocal compensation, but instead is information access traffic subject to the FCC's jurisdiction. Notwithstanding the definitions of Local Traffic and ISP-bound traffic above, and pursuant to the FCC's Order on Remand and Report and Order in CC Docket 99-68 released April 27, 2001 ("ISP Order on Remand"), BellSouth and AT&T agree to the rebuttable presumption that all combined circuit switched Local and ISP-bound Traffic delivered to BellSouth or AT&T that exceeds a 3:1 ratio of terminating to originating traffic on a statewide basis shall be considered ISP-bound traffic for compensation purposes. BellSouth and AT&T further agree to the rebuttable presumption that all combined circuit switched Local and ISP-bound Traffic delivered to BellSouth or AT&T that does not exceed a 3:1 ratio of terminating to originating traffic on a statewide basis shall be considered Local Traffic for compensation purposes.

Exhibit 1

5.3.3 All Local and ISP Traffic that is exchanged pursuant to this Agreement shall be compensated as follows:

5.3.3.1 Commencing on July 1, 2001 and continuing until December 31, 2001, $.0015 per minute of use.

5.3.3.2 Commencing on January 1, 2002 and continuing until June 30, 2003, $.0010 per minute of use.

5.3.3.3 Commencing on July 1, 2003 and continuing until June 30, 2004, or until further FCC action (whichever is later), $.0007 per minute of use.

5.3.3.4 No other per MOU charges shall apply to the carriage of Local and ISP Traffic by either Party for the other Party except as set forth above. Compensation for Transit Traffic shall be as set forth in Section 5.3.20.

Exhibit 1

5.3.4 The ability of either Party to collect a credit for intercarrier compensation paid for ISP Traffic, as described in section 5.3.5, following, shall be limited as follows based on "growth caps" on compensation for ISP Traffic ordered by the FCC. The Parties shall first determine the total number of minutes of use of ISP Traffic (as defined in this Agreement) terminated by one Party for the other Party for the three-month period commencing January 1, 2001 and ending March 31, 2001. The Parties shall then multiply this number of minutes by 4.4, and the resulting product shall be the terminating Party's "2001 ISP Annualized Traffic Cap." The total number of minutes of use of ISP Traffic for which one Party may receive compensation from the other Party during the period July 1, 2001 through December 31, 2001 shall equal 50% of that Party's 2001 ISP annualized traffic cap, due to the Parties' mid-year one-time compensation payment. The total number of minutes of use of ISP Traffic for which one Party may receive compensation from the other Party during the period January 1, 2002 through December 31, 2002 or for any calendar year thereafter shall equal 1.1 times that Party's 2001 ISP Annualized Traffic Cap.

5.3.5 For the period commencing July 1, 2001, each party will bill the other for all minutes of use specified in 5.3.3, above. The parties will meet in February 2002 on a trial basis to determine if annual meetings are sufficient for determining the number of ISP-bound minutes. If such trial proves successful, the parties will meet each succeeding February, thereafter, for the duration of this Agreement to determine the number of ISP-bound minutes and there will be no need to amend this Agreement. If the trial proves unsuccessful, no later than June 2002, the parties will develop a subsequent process and amend this Agreement Intercarrier Compensation paid for any ISP-bound minutes of use that exceeds the caps described in 5.3.4, above, will be credited to that party in the March bill. At this same meeting, the Parties will reach agreement on the ISP-bound minutes of use cap for the next time period.

5.3.6 For the purposes of this Attachment 3, Common (Shared) Transport is defined as the transport of one Party's traffic by the other Party over the other Party's common (shared) facilities between the other Party's tandem switch and end office switch and/or between the other Party's tandem switches.

5.3.7 For the purposes of this Attachment 3, Tandem Switching is defined as the function that establishes a communications path between two switching offices through a third switching office (the Tandem switch).

5.3.8 For the purposes of this Attachment 3, End Office Switching is defined as the function that establishes a communications path between the trunk side and line side of the End Office switch.

5.3.9 In the event that AT&T elects to offer service within a LATA using a switch located in another LATA, AT&T agrees to provide the transport for

Exhibit 1

both Parties' traffic between the remote AT&T switch and a point (i.e., a facility point of presence) within the LATA in which AT&T offers service. Such facility point of presence shall be deemed to be an AT&T switch for the purposes of this Attachment.

5.3.10 Switched Access Traffic. Switched Access Traffic is defined as telephone calls requiring local transmission or switching services for the purpose of the origination or termination of Intrastate InterLATA and Interstate InterLATA traffic. Switched Access Traffic includes, but is not limited to, the following types of traffic: Feature Group A, Feature Group B, Feature Group D, toll free access (e.g., 800/877/888), 900 access, and their successors. Additionally, If BellSouth or AT&T is the other Party's end user's presubscribed interexchange carrier or if an end user uses BellSouth or AT&T as an interexchange carrier on a 101XXXX basis, BellSouth or AT&T will charge the other Party the appropriate tariff charges for originating switched access services. The Parties have been unable to agree as to whether Voice over Internet Protocol ("VOIP") transmissions which cross local calling area boundaries constitute Switched Access Traffic. Notwithstanding the foregoing, and without waiving any rights with respect to either Party's position as to the jurisdictional nature of VOIP, the Parties agree to abide by any effective and applicable FCC rules and orders regarding the nature of such traffic and the compensation payable by the Parties for such traffic, if any; provided however, that any VOIP transmission which originates in one LATA and terminates in another LATA (i.e., the end-to-end points of the call), shall not be compensated as Local Traffic. This Section is interrelated to Section 5.3.1.1.

5.3.11 The Parties have been unable to agree as to the appropriate compensation for calls which originate in a LATA and terminate to a physical location outside of that LATA but to a number assigned to a rate center within that LATA. However, without prejudice to either Party's position concerning the application of reciprocal compensation or access charges to such traffic, the Parties agree for purposes of this Agreement only and subject to the Parties' agreement to the terms of Sections 5.3.1.1 and 5.3.3, and on an interim basis until the FCC issues an Order addressing this issue, neither Party shall bill the other reciprocal compensation, intercarrier compensation or switched access in connection with the exchange of any traffic as described in the first sentence of this paragraph. Once the FCC issues an Effective Order addressing this issue, the Parties agree to amend this Interconnection Agreement to comply with the Order on a prospective basis only within thirty (30) days of either Party's written request. No "true-up" shall be required in connection with such an Effective Order. Nothing in this Section 5.3.4 is intended to change the way that the Parties treat ISP-bound traffic in accordance with the FCC's ISP Order on Remand.

Exhibit 1

5.3.12 Billing Point of Interface Compensation. If BellSouth establishes a BPOI, AT&T agrees to pay to BellSouth Interoffice Dedicated Transport and any associated Multiplexing for BellSouth to transport BellSouth's originated Local and ISP-bound Traffic over BellSouth facilities from the BPOI as described in Section 1.8.3 of this Attachment to the Physical Point of Interface. Such Interoffice Dedicated Transport shall be priced as set forth in Exhibit A. The Interoffice Dedicated Transport mileage shall be the airline mileage between the Vertical and Horizontal ("V&H") coordinates of the BPOI and the V&H coordinates of the BellSouth Point of Interface. The Interoffice Dedicated Transport charges for BPOI shall be billed based on the actual volume of traffic in increments of 8.9M minutes, which is a DS3 equivalent. BellSouth will not assess charges for an additional DS3 until the additional 8.9M-minute threshold is met.

5.3.13 Charges for Trunks and Associated Dedicated Facilities. Compensation for trunks and associated dedicated facilities shall be handled in accordance with Section 1.9-1.9.2 of this Attachment.

5.3.14 Percent Local Use. Each Party will report to the other a Percentage Local Usage ("PLU"). The application of the PLU will determine the amount of local minutes to be billed to the other Party. For purposes of developing the PLU, each Party shall consider every local call and every long distance call, excluding intermediary traffic. BellSouth shall report quarterly PLU factors to AT&T. BellSouth will accept from AT&T monthly PLU factors provided under the previous agreement until the third quarter of 2001, at which time AT&T shall report quarterly PLU factors. BellSouth and AT&T shall also provide a positive report updating the PLU. Detailed requirements associated with PLU reporting shall be as set forth in BellSouth's Standard Percent Local Use Reporting Platform for Interconnection Purchasers, as it is amended from time to time during this Agreement. Notwithstanding the foregoing, where the terminating company has message recording technology that identifies the traffic terminated, such information, in lieu of the PLU factor, shall at the company's option be utilized to determine the appropriate reciprocal compensation to be paid.

5.3.15 Percent Local Facility. Each Party shall report to the other a PLF. The application of the PLF will determine the portion of switched dedicated transport to be billed per the local jurisdiction rates. The PLF shall be applied to multiplexing, local channel and interoffice channel switched dedicated transport utilized in the provision of local interconnection trunks. Each Party shall update its PLF on the first of January, April, July and October of the year and shall send it to the other Party to be received no later than thirty (30) calendar days after the first of each such month to be effective the first bill period the following month, respectively. Requirements associated with PLU and PLF calculation and reporting shall be as set forth in BellSouth's Percent Local Use/Percent Local Facility Reporting Guidebook, as it is amended from time to time.

Exhibit 1

5.3.16 Percentage Interstate Usage. For combined interstate and intrastate AT&T traffic terminated by BellSouth over the same facilities, AT&T will be required to provide a projected Percentage Interstate Usage ("PIU") to BellSouth. All jurisdictional report requirements, rules and regulations for Interexchange Carriers specified in BellSouth's Intrastate Access Services Tariff will apply to AT&T. After interstate and intrastate traffic percentages have been determined by use of PIU procedures, the PLU factor will be used for application and billing of local interconnection. Notwithstanding the foregoing, where the terminating company has message recording technology that identifies the traffic terminated, such information, in lieu of the PLU factor, shall at the company's option be utilized to determine the appropriate reciprocal compensation to be paid.

5.3.17 Audits. On thirty (30) days' written notice, each Party must provide the other the ability and opportunity to conduct an annual audit of the traffic reported. BellSouth and AT&T shall retain records of call detail for a minimum of nine months from which a PLU and/or PIU can be ascertained. The audit shall be accomplished during normal business hours at an office designated by the Party being audited. Audit requests shall not be submitted more frequently than one (1) time per calendar year. Audits shall be performed by a mutually acceptable independent auditor paid for by the Party requesting the audit. The PLU and/or PIU shall be adjusted based upon the audit results and shall apply to the usage for the quarter the audit was completed, to the usage for the quarter prior to the completion of the audit, and to the usage for the two quarters following the completion of the audit. If, as a result of an audit, either Party is found to have overstated the PLU and/or PIU by twenty percentage points (20%) or more, that Party shall reimburse the auditing Party for the cost of the audit.

5.3.18 Compensation for 800 Traffic. Each Party shall compensate the other pursuant to the appropriate switched access charges, including the database query charge as set forth in the each Party's intrastate or interstate switched access tariffs.

5.3.19 Records for 8YY Billing. Each Party will provide to the other the appropriate records necessary for billing intraLATA 8YY customers. Records required for billing end users purchasing 8YY Services shall be provided pursuant to Attachment 6 of this Agreement, incorporated herein by this reference.

5.3.20 Transit Traffic Service. BellSouth shall provide tandem switching and transport services for AT&T's transit traffic. Transit traffic is traffic originating on AT&T's network that is switched and/or transported by BellSouth and delivered to a third party's network, or traffic originating on a third Party's network that is switched and/or transported by BellSouth and delivered to AT&T's network. Transit traffic consists of local transit traffic and Switched Access transit traffic. Rates for local transit traffic

Exhibit 1

shall be the applicable call transport and termination charges as set forth in Exhibit A to this Attachment. Switched Access transit traffic shall be meet-point billed in accordance with the BellSouth Interstate or Intrastate Switched Access tariffs. Switched Access transit traffic presumes that AT&T's end office is subtending the BellSouth Access Tandem for switched access traffic to and from AT&T's end users utilizing BellSouth facilities, either by direct trunks with the IXC, or via the BellSouth Access Tandem. Billing associated with all transit traffic shall be pursuant to MECAB procedures. Wireless Type 1 traffic shall not be treated as transit traffic from a routing or billing perspective. Wireless Type 2A traffic shall not be treated as transit traffic from a routing or billing perspective until BellSouth and the Wireless carrier have the capability to properly meet-point-bill in accordance with Multiple Exchange Carrier Access Billing ("MECAB") guidelines. Transit traffic does not include traffic originating from or terminating to AT&T end-users utilizing resold BellSouth services.

Exhibit 2 of Exh. 11

BellSouth agrees to implement control mechanisms and procedures to render a bill that accurately reflects the Billed Services ordered and used by AT&T. Accordingly, at AT&T's option on a connectivity by connectivity basis, AT&T and BellSouth agree to model, for the purposes of this Agreement, the process and methodology for access certification set forth in the Access Billing Supplier Quality Certification Operating Agreement dated August 13, 1993, executed by AT&T and BellSouth which governs certification of access bills for interLATA and intraLATA calls. At the point AT&T and BellSouth mutually agree that pre-certification is complete, all billing disputes will be handled pursuant to a billing supplier quality certification operating agreement to be executed by the Parties.

1.14 Payment Of Charges

1.14.1 Subject to the terms of this Agreement, AT&T and BellSouth will pay each other within thirty (30) calendar days from the Bill Date, or twenty (20) calendar days from the receipt of the bill, whichever is later. If the payment due date is a Sunday or is a Monday that has been designated a bank holiday by the Chase Manhattan Bank of New York (or such other bank as AT&T specifies), payment will be made the next business day. If the payment due date is a Saturday or is on a Tuesday, Wednesday, Thursday or Friday that has been designated a bank holiday by the Chase Manhattan Bank of New York (or such other bank as AT&T specifies), payment will be made on the preceding business day.

1.14.2 Payments shall be made in U.S. Dollars via electronic funds transfer ("EFT") to the other Party's bank account. At least thirty (30) days prior to the first transmission of billing data and information for payment, BellSouth and AT&T shall provide each other the name and address of its bank, its account and routing number and to whom billing payments should be made payable. If such banking information changes, each Party shall provide the other Party at least sixty (60) days written notice of the change and such notice shall include the new banking information. The Parties will render payment via EFT. AT&T will provide BellSouth with one address to which such payments shall be rendered and BellSouth will provide AT&T with one address to which such payments shall be rendered. In the event AT&T receives multiple bills from BellSouth which are payable on the same date, AT&T may remit one payment for the sum of all bills payable to BellSouth's bank account specified in this subsection if AT&T provides payment advice to BellSouth. Each Party shall provide the other Party with a contact person for the handling of billing payment questions or problems.

1.15 Billing Disputes

1.15.1 On a connectivity by connectivity basis and until such time as a precertification process is in place, each party agrees to notify the other party in writing upon the discovery of a billing dispute. The disputing party agrees to provide the billing party sufficient documentation to investigate the dispute and may withhold any disputed amounts supported by such documentation. Until documentation is provided all outstanding billed amounts will be considered past due. In the event of a billing dispute, the parties will endeavor to resolve the dispute within sixty (60) calendar days of the dispute notification date. Resolution of the dispute is expected to occur at the first level of management resulting in a recommendation for settlement of the dispute.

1.15.2 If the issues are not resolved within the allotted time frame, each of the parties shall appoint a designated representative who has authority to settle the dispute and who is at a higher level of management than the persons with direct responsibility for administration of this Agreement. The designated representatives shall meet as often as they reasonably deem necessary in order to discuss the dispute and negotiate in good faith in an effort to resolve such dispute. The specific format for such discussions will be left to the discretion of the designated representatives, however all reasonable requests for relevant information made by one Party to the other Party shall be honored.

1.15.3 If the Parties are unable to resolve issues related to the disputed amounts within forty-five (45) days after the parties' appointment of designated representatives, the dispute will be resolved in accordance with the dispute resolution procedure set forth in Section 16 of the General Terms and Conditions of this Agreement, incorporated herein by this reference.

1.15.4 If a party disputes a charge and does not pay such charge by the payment due date, such charges shall be subject to late payment charges as set forth in Section 1.16 of this Attachment 6. If a party disputes charges and the dispute is resolved in favor of such party, the other party shall credit the bill of the disputing party for the amount of the disputed charges along with any late payment charges assessed no later than the second Bill Date after the resolution of the dispute. Accordingly, if a party disputes charges and the dispute is resolved in favor of the other party, the disputing party shall pay the other party the amount of the disputed charges and any associated late payment charges assessed no later than the second bill payment due date after the resolution of the dispute.

1.16 Late Payment Charges

1.16.1 If either Party fails to remit payment for any charges described in this Attachment 6 by the payment due date, or if a payment or any portion of a payment is received by either Party after the payment due date, or if a payment or any portion of a payment is received in funds which are not immediately available to the other Party, then a late payment penalty shall be assessed. For bills rendered by BellSouth for payment by AT&T, the late payment charge shall be calculated based on the portion of the payment not received by the payment due date times the late factor as set forth in the following BellSouth tariffs, based upon the service for which payment was not received: for general subscriber services, Section A2 of the General Subscriber Services Tariff; for private line service, Section B2 of the Private Line Service Tariff; and for access service, Section E2 of the Access Service Tariff. For bills rendered by AT&T for payment by BellSouth the late payment charge shall be calculated based on the portion of the payment not received by the payment date times the lesser of (i) .one and one-half percent (1 ½%) per month or (ii) the highest interest rate (in decimal value) which may be charged by law for commercial transactions, compounded daily for the number of days from the payment date to and including the date that payment is actual made. In no event, however, shall interest be assessed by AT&T on any previously assessed late payment charges. BellSouth shall only assess interest on previously assessed late payment charges in a state where it has the authority pursuant to its tariffs. Bill disputes shall not be submitted by either party for any charge on or after one (1) year following the bill date of the bill on which the charge first appears.

1.17 Discontinuance of Service

1.17.1 The procedures for discontinuing service to an end user are as follows:

1.17.1.1 Where possible, BellSouth will deny service to AT&T's end user on behalf of, and at the request of, AT&T. Upon restoration of the end user's service, restoral charges will apply and will be the responsibility of AT&T.

1.17.1.2 At the request of AT&T, BellSouth will disconnect an AT&T end user.

1.17.1.3 All requests by AT&T for denial or disconnection of an end user for nonpayment must be in writing.

1.17.1.4 AT&T will be made solely responsible for notifying the end user of the proposed disconnection of the service.

1.17.1.5 BellSouth may disconnect and reuse facilities when the facility is in a denied state and BellSouth has received an order to establish new

Exhibit 3 of Exh. 11

Florida July 2001 through October 2002

Docket No. 020919-TP
J. A. King Exhibit 3
Monthly Overcharges by BellSouth

STATE / MONTH	Estimated LATAwide Local Minutes of USE Incorrectly Billed at Access Rates	Access Rates Incorrectly Applied To Estimated LATAwide Local Minutes	Local Reciprocal Compensation Rates That Should have Been Applied To LATAwide Local Minutes Of Use	Credit Due for AT&T for LATAwide Local Minutes of Use Incorrectly Billed as Access Rates
FL				
			New Total Thru Oct 02	$ (6,310,426)
October-02	15,263,227	$ 0.002167	$ 0.001000	$ (315,491)
September-02	16,846,691	$ 0.022215	$ 0.001000	$ (357,406)
August-02	13,436,808	$ 0.022116	$ 0.001000	$ (283,732)
July-02	15,310,413	$ 0.022005	$ 0.001000	$ (321,600)
June-02	18,932,187	$ 0.022201	$ 0.001000	$ (401,376)
			Total Thru May 02	$ (4,630,822)
May-02	12,990,657	$ 0.024706	$ 0.001000	$ (307,950)
April-02	19,217,443	$ 0.022481	$ 0.001000	$ (412,814)
March-02	19,739,347	$ 0.022724	$ 0.001000	$ (428,812)
February-02	17,188,343	$ 0.025055	$ 0.001000	$ (413,467)
January-02	18,976,885	$ 0.024889	$ 0.001000	$ (453,329)
December-01	18,416,310	$ 0.024891	$ 0.001500	$ (430,781)
November-01	19,726,925	$ 0.024881	$ 0.001500	$ (461,235)
October-01	17,995,102	$ 0.024687	$ 0.001500	$ (417,251)
September-01	20,401,374	$ 0.022886	$ 0.001500	$ (436,294)
August-01	18,906,460	$ 0.022829	$ 0.001500	$ (403,260)
July-01	19,740,912	$ 0.025087	$ 0.001500	$ (465,629)

CERTIFICATE OF SERVICE

I HEREBY CERTIFY that a copy of the Direct Testimony of Jeffrey A. King of AT&T of the Southern States, LLC, Teleport Telecommunications Group, Inc. and TCG South Florida (all collectively "AT&T") was furnished by U. S. Mail this 15th day of January, 2003 to the following:

BellSouth Telecommunications, Inc.
Nancy B. White/James Meza III/Andrew Shore
c/o Ms. Nancy H. Sims
150 South Monroe Street, Suite 400
Tallahassee, FL 32301-1556
Phone: (850) 224-7798
Fax: (850) 222-8640
Email: nancy.sims@bellsouth.com/andrew.shore@bellsouth.com

Florida Cable Telecommunications Assoc., Inc.
Michael A. Gross
246 E. 6th Avenue, Suite 100
Tallahassee, FL 32303
Phone: 850-681-1990
Fax: (850) 681-9676
Email: mgross@fcta.com

Patricia Christensen, Esq.
Division of Legal Services
Room 370
Florida Public Service Commission
2540 Shumard Oak Boulevard
Tallahassee, FL 32399-0850
Fax: (850) 413-6221
Email: pchriste@psc.state.fl.us

David Eppsteiner, Esq.
AT&T Communications of the Southern States LLC
Suite 8100
1200 Peachtree Street, NE
Atlanta, GA 30309

Loretta A. Cecil

Loretta A. Cecil, Esq.

LOCAL TRAFFIC

AT&T/BellSouth Second Interconnection Agreement – October 26, 2001

5.3.1 **Compensation for Local Traffic**

5.3.1.1 For the treatment of local and ISP-bound traffic in this Agreement, the Parties agree to implement the FCC's Order on Remand and Report and Order in CC Docket 96-98 and 99-68 released April 27, 2001 ("ISP Order on Remand"). The Parties further agree to amend this agreement, within sixty (60) days of execution, to incorporate language reflecting the FCC ISP Order on Remand. At such time as that amendment is finalized, the Parties agree to work cooperatively to "true-up" compensation amounts consistent with the terms of the amended language from the effective date of the FCC ISP Order on Remand to the date the amendment is finalized. In this Section, the Parties express their intent to file negotiated language to incorporate the FCC's ISP Order on Remand. If the Parties are unable to agree on this language addressing this issue by the time the language is due to be filed, either party may petition the Florida Public Service Commission to resolve the dispute between the Parties as to the appropriate language addressing this issue. Additionally, the Parties agree to apply a "LATAwide" local concept to this Attachment 3, meaning that traffic that has traditionally been treated as intraLATA toll traffic will now be treated as local for intercarrier compensation purposes, **except for those calls that are originated or terminated through switched access arrangements as established by the State Commission or FCC.**

FLORIDA PUBLIC SERVICE COMMISSION
DOCKET
NO. 020919-TP EXHIBIT NO 11A
COMPANY/
WITNESS: AT+T - Local Traffic
DATE: 5-07-03

SWITCHED ACCESS TRAFFIC

AT&T/BellSouth Second Interconnection Agreement – October 26, 2001

5.3.3 **Switched Access Traffic.** Switched Access Traffic is defined as telephone calls requiring local transmission or switching services for the purpose of the origination or termination of Intrastate InterLATA and Interstate InterLATA traffic. Switched Access Traffic includes, but is not limited to, the following types of traffic: Feature Group A, Feature Group B, Feature Group D, toll free access (e.g., 800/877/888), 900 access, and their successors. Additionally, if BellSouth or AT&T is the other Party's end user's presubscribed interexchange carrier or if an end user uses BellSouth or AT&T as an interexchange carrier on a 101XXX basis, BellSouth or AT&T will charge the other Party the appropriate tariff charges for originating switched access services. The Parties have been unable to agree as to whether Voice over Internet Protocol (VOIP) transmissions which cross local calling area boundaries constitute Switched Access Traffic. Notwithstanding the foregoing, and without waiving any rights with respect to either Party's position as to the jurisdictional nature of VOIP, the Parties agree to abide by any effective and applicable FCC rules and orders regarding the nature of such traffic and the compensation payable by the Parties for such traffic, if any; provided however, that any VOIP transmission which originates in one LATA and terminates in another LATA (i.e., the end-to-end points of the call), shall not be compensated as Local Traffic. **This Section is interrelated to Section 5.3.1.1.**

SWITCHED ACCESS TRAFFIC MATRIX

Shiroishi to Peacock July 11, 2001 6:21 p.m.	**5.3.3**	**Switched Access Traffic**. Switched Access Traffic is defined as telephone calls requiring local transmission or switching services for the purpose of the origination or termination of Telephone Toll Service. Switched Access Traffic includes, but is not limited to, the following types of traffic: Feature Group A, Feature Group B, Feature Group C, Feature Group D, toll free access (e.g., 800/877/888), 900 access, and their successors. The Parties have been unable to agree as to whether Voice over Internet Protocol (VOIP) transmissions which cross local calling area boundaries constitute Switched Access Traffic. Notwithstanding the foregoing, and without waiving any rights with respect to either Party's position as to the jurisdictional nature of VOIP, the Parties agree to abide by any effective and applicable FCC rules and orders regarding the nature of such traffic and the compensation payable by the Parties for such traffic, if any; provided however, that any VOIP transmission which originates in one local calling area and terminates in another local calling area (i.e., the end-to-end points of the call), shall not be compensated as Local Traffic.
Peacock to Shiroishi July 16, 2001 4:20 p.m.	**5.3.3**	**Switched Access Traffic**. Switched Access Traffic is defined as telephone calls requiring local transmission or switching services for the purpose of the origination or termination of *** **Peacock "Strike-Out" of Telephone Toll Service** *** ~~Telephone Toll Service~~. Switched Access Traffic includes, but is not limited to, the following types of traffic: Feature Group A, Feature Group B, Feature Group C, Feature Group D, toll free access (e.g., 800/877/888), 900 access, and their successors. The Parties have been unable to agree as to whether Voice over Internet Protocol (VOIP) transmissions which cross local calling area boundaries constitute Switched Access Traffic. Notwithstanding the foregoing, and without waiving any rights with respect to either Party's position as to the jurisdictional nature of VOIP, the Parties agree to abide by any effective and applicable FCC rules and orders regarding the nature of such traffic and the compensation payable by the Parties for such traffic, if any; ~~provided however, that any VOIP transmission which originates in one local calling area and terminates in another local calling area (i.e., the end-to-end points of the call), shall not be compensated as Local Traffic.~~
Shiroishi to Peacock July 17, 2001 12:54 p.m.	**5.3.3**	**Switched Access Traffic**. Switched Access Traffic is defined as telephone calls requiring local transmission or switching services for the purpose of the origination or termination of ~~Telephone Toll Service~~. Switched Access Traffic includes, but is not limited to, the following types of traffic: Feature Group A, Feature Group B, Feature Group C, Feature Group D, toll free access (e.g., 800/877/888), 900 access, and their successors. The Parties have been unable to agree as to whether Voice over Internet Protocol (VOIP) transmissions which cross local calling area boundaries constitute Switched Access Traffic. Notwithstanding the foregoing, and without waiving any rights with respect to either Party's position as to the jurisdictional nature of VOIP, the Parties agree to abide by any effective and applicable FCC rules and orders regarding the nature of such traffic and the compensation payable by the Parties for such traffic, if any; provided however, that any VOIP transmission which originates in one LATA and terminates in another LATA (i.e., the end-to-end points of the call), shall not be compensated as Local Traffic.*** **Shiroishi Adds Last Sentence** This Section 5.3.2 is interrelated to Section 5.3.1.2.***

Shiroishi to Peacock July 18, 2001 7:27 p.m.	**5.3.3**	**Switched Access Traffic**. Switched Access Traffic is defined as telephone calls requiring local transmission or switching services for the purpose of the origination or termination of *** **Shiroishi adds "IntraLATA Intrastate, Intrastate InterLATA and Interstate InterLATA"** *** IntraLATA Intrastate, Intrastate InterLATA and Interstate InterLATA traffic. *** **Note: Telephone Toll Service deleted from July 16, 2001, 4:20 p.m. "red-line."** *** Switched Access Traffic includes, but is not limited to, the following types of traffic: Feature Group A, Feature Group B, Feature Group D, toll free access (e.g., 800/877/888), 900 access, and their successors. The Parties have been unable to agree as to whether Voice over Internet Protocol (VOIP) transmissions which cross local calling area boundaries constitute Switched Access Traffic. Notwithstanding the foregoing, and without waiving any rights with respect to either Party's position as to the jurisdictional nature of VOIP, the Parties agree to abide by any effective and applicable FCC rules and orders regarding the nature of such traffic and the compensation payable by the Parties for such traffic, if any; provided however, that any VOIP transmission which originates in one LATA and terminates in another LATA (i.e., the end-to-end points of the call), shall not be compensated as Local Traffic. This Section is interrelated to Section 5.3.1.1.
Peacock to Shiroishi July 19, 2001 2:21 a.m.	**5.3.3**	**Switched Access Traffic**. Switched Access Traffic is defined as telephone calls requiring local transmission or switching services for the purpose of the origination or termination of *** **Peacock Highlights IntraLATA Intrastate For Discussion** *** IntraLATA Intrastate, *** **Peacock moves following language up in the Section.** *** (If BellSouth or AT&T is the other Party's end user's presubscribed interexchange carrier or if an end user uses BellSouth or AT&T as an interexchange carrier on a 101XXX basis, BellSouth or AT&T will charge the other Party the appropriate tariff charges for originating swiched access services.) ~~calls that are routed over switched access trunk groups,~~ Intrastate InterLATA and Interstate InterLATA traffic. Switched Access Traffic includes, but is not limited to, the following types of traffic: Feature Group A, Feature Group B, Feature Group D, toll free access (e.g., 800/877/888), 900 access, and their successors. ~~(If BellSouth or AT&T is the other Party's end user's presubscribed interexchange carrier or if an end user uses BellSouth or AT&T as an interexchange carrier on a 101XXX basis, BellSouth or AT&T will charge the other Party the appropriate tariff charges for originating switched access services.)~~ However, ~~T~~the Parties have been unable to agree as to whether Voice over Internet Protocol (VOIP) transmissions which cross local calling area boundaries constitute Switched Access Traffic. Notwithstanding the foregoing, and without waiving any rights with respect to either Party's position as to the jurisdictional nature of VOIP, the Parties agree to abide by any effective and applicable FCC rules and orders regarding the nature of such traffic and the compensation payable by the Parties for such traffic, if any; provided however, that any VOIP transmission which originates in one LATA and terminates in another LATA (i.e., the end-to-end points of the call), shall not be compensated as Local Traffic. This Section 5.3.2 is interrelated to Section 5.3.1.1.
Shiroishi to Peacock July 19, 2001 9:59 a.m.	**5.3.3**	**Switched Access Traffic**. Switched Access Traffic is defined as telephone calls requiring local transmission or switching services for the purpose of the origination or termination of *** **Shiroishi "Strikes Out" IntraLATA Intrastate** *** ~~IntraLATA Intrastate~~, Intrastate

		InterLATA and Interstate InterLATA traffic. Switched Access Traffic includes, but is not limited to, the following types of traffic: Feature Group A, Feature Group B, Feature Group D, toll free access (e.g., 800/877/888), 900 access, and their successors. Additionally, if BellSouth or AT&T is the other Party's end user's presubscribed interexchange carrier or if an end user uses BellSouth or AT&T as an interexchange carrier on a 101XXX basis, BellSouth or AT&T will charge the other Party the appropriate tariff charges for originating switched access services. The Parties have been unable to agree as to whether Voice over Internet Protocol (VOIP) transmissions which cross local calling area boundaries constitute Switched Access Traffic. Notwithstanding the foregoing, and without waiving any rights with respect to either Party's position as to the jurisdictional nature of VOIP, the Parties agree to abide by any effective and applicable FCC rules and orders regarding the nature of such traffic and the compensation payable by the Parties for such traffic, if ~~any;~~any; provided however, that any VOIP transmission which originates in one LATA and terminates in another LATA (i.e., the end-to-end points of the call), shall not be compensated as Local Traffic. This Section is interrelated to Section 5.3.1.1.

FLORIDA PUBLIC SERVICE COMMISSION
DOCKET
NO. 020919-TP EXHIBIT NO. 12
COMPANY/
WITNESS: AT+T- updated Direct JAK-3
DATE: 5-07-03

Florida July 2001 through December 2002

STATE / MONTH	Estimated LATAwide Local Minutes of USE Incorrectly Billed at Access Rates	Access Rates Incorrectly Applied To Estimated LATAwide Local Minutes	Local Reciprocal Compensation Rates That Should have Been Applied To LATAwide Local Minutes Of Use	Credit Due for AT&T for LATAwide Local Minutes of Use Incorrectly Billed as Access Rates
FL				
			New Total Thru Dec 02	$ (6,961,545)
December-02	14,064,717	$ 0.020368	$ 0.001000	$ (272,400)
November-02	18,472,214	$ 0.021502	$ 0.010000	$ (378,719)
			Total Thru Oct 02	$ (6,310,426)
October-02	15,263,227	$ 0.002167	$ 0.001000	$ (315,491)
September-02	16,846,691	$ 0.022215	$ 0.001000	$ (357,406)
August-02	13,436,808	$ 0.022116	$ 0.001000	$ (283,732)
July-02	15,310,413	$ 0.022005	$ 0.001000	$ (321,600)
June-02	18,932,187	$ 0.022201	$ 0.001000	$ (401,376)
			Total Thru May 02	$ (4,630,822)
May-02	12,990,657	$ 0.024706	$ 0.001000	$ (307,950)
April-02	19,217,443	$ 0.022481	$ 0.001000	$ (412,814)
March-02	19,739,347	$ 0.022724	$ 0.001000	$ (428,812)
February-02	17,188,343	$ 0.025055	$ 0.001000	$ (413,467)
January-02	18,976,885	$ 0.024889	$ 0.001000	$ (453,329)
December-01	18,416,310	$ 0.024891	$ 0.001500	$ (430,781)
November-01	19,726,925	$ 0.024881	$ 0.001500	$ (461,235)
October-01	17,995,102	$ 0.024687	$ 0.001500	$ (417,251)
September-01	20,401,374	$ 0.022886	$ 0.001500	$ (436,294)
August-01	18,906,460	$ 0.022829	$ 0.001500	$ (403,260)
July-01	19,740,912	$ 0.025087	$ 0.001500	$ (465,629)

the first sentence of this paragraph. Once the FCC issues an Effective Order addressing this issue, the Parties agree to amend this Interconnection Agreement to comply with the Order on a prospective basis only within thirty (30) days of either Party's written request. No "true-up" shall be required in connection with such an Effective Order. Nothing in this Section 5.3.4 is intended to change the way that the Parties treat ISP-bound traffic in accordance with the FCC's ISP Order on Remand.

5.3.5 Billing Point of Interface Compensation. If BellSouth establishes a BPOI, AT&T agrees to pay to BellSouth Interoffice Dedicated Transport and any associated Multiplexing for BellSouth to transport BellSouth's originated Local and ISP-bound Traffic over BellSouth facilities from the BPOI as described in Section 1.8.3 of this Attachment to the Physical Point of Interface. Such Interoffice Dedicated Transport shall be priced as set forth in Exhibit A. The Interoffice Dedicated Transport mileage shall be the airline mileage between the Vertical and Horizontal ("V&H") coordinates of the BPOI and the V&H coordinates of the BellSouth Point of Interface. The Interoffice Dedicated Transport charges for BPOI shall be billed based on the actual volume of traffic in increments of 8.9M minutes, which is a DS3 equivalent. BellSouth will not assess charges for an additional DS3 until the additional 8.9M-minute threshold is met.

5.3.6 Charges for Trunks and Associated Dedicated Facilities. Compensation for trunks and associated dedicated facilities shall be handled in accordance with Section 1.9-1.9.2 of this Attachment.

5.3.7 Percent Local Use. Each Party will report to the other a Percentage Local Usage ("PLU"). The application of the PLU will determine the amount of local minutes to be billed to the other Party. For purposes of developing the PLU, each Party shall consider every local call and every long distance call, excluding intermediary traffic. BellSouth shall report quarterly PLU factors to AT&T. BellSouth will accept from AT&T monthly PLU factors provided under the previous agreement until the third quarter of 2001, at which time AT&T shall report quarterly PLU factors. BellSouth and AT&T shall also provide a positive report updating the PLU. Detailed requirements associated with PLU reporting shall be as set forth in BellSouth's Standard Percent Local Use Reporting Platform for Interconnection Purchasers, as it is amended from time to time during this Agreement. Notwithstanding the foregoing, where the terminating company has message recording technology that identifies the traffic terminated, such information, in lieu of the PLU factor, shall at the company's option be utilized to determine the appropriate reciprocal compensation to be paid.

FLORIDA PUBLIC SERVICE COMMISSION
DOCKET NO. 020919-TP EXHIBIT NO. 13
COMPANY/ WITNESS: AT+T - Rebuttal JAK 1
DATE: 5-07-03

DOCUMENT NUMBER-DATE
02482 MAR 14 8
FPSC-COMMISSION CLERK

FL 10/26/01

5.3.8 Percent Local Facility. Each Party shall report to the other a PLF. The application of the PLF will determine the portion of switched dedicated transport to be billed per the local jurisdiction rates. The PLF shall be applied to multiplexing, local channel and interoffice channel switched dedicated transport utilized in the provision of local interconnection trunks. Each Party shall update its PLF on the first of January, April, July and October of the year and shall send it to the other Party to be received no later than thirty (30) calendar days after the first of each such month to be effective the first bill period the following month, respectively. Requirements associated with PLU and PLF calculation and reporting shall be as set forth in BellSouth's Percent Local Use/Percent Local Facility Reporting Guidebook, as it is amended from time to time.

5.3.9 Percentage Interstate Usage. For combined interstate and intrastate AT&T traffic terminated by BellSouth over the same facilities, AT&T will be required to provide a projected Percentage Interstate Usage ("PIU") to BellSouth. All jurisdictional report requirements, rules and regulations for Interexchange Carriers specified in BellSouth's Intrastate Access Services Tariff will apply to AT&T. After interstate and intrastate traffic percentages have been determined by use of PIU procedures, the PLU factor will be used for application and billing of local interconnection. Notwithstanding the foregoing, where the terminating company has message recording technology that identifies the traffic terminated, such information, in lieu of the PLU factor, shall at the company's option be utilized to determine the appropriate reciprocal compensation to be paid.

5.3.10 Audits. On thirty (30) days' written notice, each Party must provide the other the ability and opportunity to conduct an annual audit of the traffic reported. BellSouth and AT&T shall retain records of call detail for a minimum of nine months from which a PLU and/or PIU can be ascertained. The audit shall be accomplished during normal business hours at an office designated by the Party being audited. Audit requests shall not be submitted more frequently than one (1) time per calendar year. Audits shall be performed by a mutually acceptable independent auditor paid for by the Party requesting the audit. The PLU and/or PIU shall be adjusted based upon the audit results and shall apply to the usage for the quarter the audit was completed, to the usage for the quarter prior to the completion of the audit, and to the usage for the two quarters following the completion of the audit. If, as a result of an audit, either Party is found to have overstated the PLU and/or PIU by twenty percentage points (20%) or more, that Party shall reimburse the auditing Party for the cost of the audit.

E6. BELLSOUTH SWA SERVICE (T)

E6.1 General

BellSouth SWA service, which is available to ICs for their use in furnishing their services to end users, provides a two-point electrical communications path between an IC's terminal location and an end user's premises. It provides for the use of common terminating, switching and trunking facilities, and both common subscriber plant and unshared subscriber plant (i.e., ***BellSouth SWA WATS Service***) of the Company. ***BellSouth SWA*** service provides for the ability to originate calls from an end user's premises to an IC's terminal location, and to terminate calls from an IC's terminal location to an end user's premises in the LATA where it is provided. Specific references to material describing the elements of ***BellSouth SWA*** service are provided in E6.1.1 and E6.1.3 following. (T)

Rates and charges for ***BellSouth SWA*** service depend on the type of service ordered and whether it is provided in a Company end office that is equipped to provide equal access (***BellSouth SWA FGD*** and ***BellSouth SWA TSBSA 3***, described in E6.1.1.D. and E6.1.1.H.3. respectively). Rates and charges for ***BellSouth SWA*** service are billed to the IC, except for Carrier Common Line and ***BellSouth SWA*** charges associated with ***BellSouth SWA*** services used in the provisioning of FX/ONAL or in some cases ***BellSouth SWA FGB*** or ***BellSouth SWA TSBSA 1*** type services which will be ordered by and billed directly to the End User of these services, as set forth in E6.8 following. (T)

The application of rates for ***BellSouth SWA*** service is described in E6.7 following. Rates and charges for services other than ***BellSouth SWA*** service (e.g., an IC's toll message service) may also be applicable when ***BellSouth SWA*** service is used in conjunction with these other services. Descriptions of such applicability are provided in E6.2.1.A.7, E6.2.1.B.4, E6.2.2.A.5, E6.2.3.A.5, E6.2.4.A.4, E6.2.8.A.7., E6.2.8.B.6., E6.2.9.A.1.e., E6.2.9.B.1.e., E6.2.9.C.1.d., and E6.7.10 following. Finally, a credit is applied against line side ***BellSouth SWA*** service charges as described in E6.7.11 following. (T)

E6.1.1 BellSouth SWA Service Arrangements and Manner of Provision (T)

BellSouth SWA service is provided in nine service categories, four service categories of standard and optional features called ***BellSouth SWA FGs*** , ***BellSouth SWA*** service, ***BellSouth SWA 8XX Toll Free Dialing*** Ten Digit Screening Service, ***BellSouth SWA 900*** service, and two unbundled basic serving arrangements. The ***BellSouth SWA FG*** and unbundled service categories coexist during a transition period. Any IC desiring to convert from ***BellSouth SWA FG*** service to the analogous ***BellSouth SWA Basic Serving Arrangement*** service must submit a request. A request for a change to existing service (e.g., add, delete optional features) will follow the normal ordering process for such service. The Company will provide written notification of the date which ***BellSouth SWA FGs*** are being eliminated to all ICs of record. This notification will be sent at least six months in advance of the end of the transition period. The ***BellSouth SWA*** service categories are differentiated by their technical characteristics (e.g., line side vs. trunk side connection at the Company entry switch), and the manner in which an end user accesses them in originating calling (e.g., with or without an access code). Following is a brief description of each type of service arrangement. (T)

FLORIDA PUBLIC SERVICE COMMISSION
DOCKET
NO. 020919-TP EXHIBIT NO. 14
COMPANY/
WITNESS: BellSouth-Access Serv. Tarr.
DATE: 5-07-03

E6. BELLSOUTH SWA SERVICE

E6.1 General (Cont'd)

E6.1.1 BellSouth SWA Service Arrangements and Manner of Provision (Cont'd)

A. BellSouth SWA FGA

BellSouth SWA FGA , which is available to all ICs and End Users of FX/ONAL Service, provides line side access to Company end office switches with an associated seven digit local telephone number for use in originating communications from or terminating communications to an IC's intrastate service or a Company-provided, end office based, intrastate private network switching service. When associated with a Company-provided, end office based private network switch, end users must order BellSouth SWA FGA for off-network access.[1] When BellSouth SWA FGA service is ordered by an end user for use with a Company provided private network switch, the end user must specify the IC that provides the interLATA links of the private network service. A more detailed description of BellSouth SWA FGA is provided in E6.2.1. following.

B. BellSouth SWA FGB

BellSouth SWA FGB, which is available to all ICs and/or End Users provides trunk side access to Company end office switches with an associated uniform 950- 0XXX or 950-1XXX access code for the IC's and/or End User's use in originating and terminating communications. A more detailed description of BellSouth SWA FGB is provided in E6.2.2 following.

C. BellSouth SWA FGC

BellSouth SWA FGC, which is available only to providers of MTS and WATS, provides trunk side access to Company end office switches for the IC's use in originating and terminating communications. This service is available in all end offices which are not equipped for BellSouth SWA FGD End Office Switching. Existing BellSouth SWA FGC will be converted to BellSouth SWA FGD when it becomes available in an end office. A more detailed description of BellSouth SWA FGC is provided in E6.2.3 following.

D. BellSouth SWA FGD

BellSouth SWA FGD, which is available to all ICs, provides trunk side access to Company end office switches with an associated uniform 101XXXX access code for the IC's use in originating and terminating communications. As an option, BellSouth SWA FGD is also available, where technically feasible, with an associated uniform 950-XXXX access code for the customer's use in originating and terminating traffic. A more detailed description of BellSouth SWA FGD is provided in E6.2.4 following. (C)

Note 1: Any private switched network provided by the Company pursuant to a contract for a specified term and ordered by the customer prior to May 26, 1988 will be permitted to maintain its existing off-network access arrangements until the expiration of the current term of the contract. If the end user terminates his contract prior to its expiration date and replaces the Company-provided private network switch with a switch provided by an IC at its terminal location, the end user may continue the grandfathered off-network access arrangement with its new switch until the original expiration date of the terminated contract.

E6. BELLSOUTH SWA SERVICE (T)

E6.1 General (Cont'd)

E6.1.1 BellSouth SWA Service Arrangements and Manner of Provision (Cont'd) (T)

E. ***BellSouth SWA*** Service (T)

500 Access ***BellSouth SWA 500*** service is an originating service that is provided via ***BellSouth SWA 500*** service Trunk Groups. ***BellSouth SWA 500*** service Trunk Groups will be provided in conjunction with ***BellSouth SWA*** FGC, ***BellSouth SWA*** FGD, ***BellSouth SWA TSBSA*** 2 or ***BellSouth SWA TSBSA 3*** or in accordance with the technical characteristics of ***BellSouth SWA*** FGC, ***BellSouth SWA*** FGD, ***BellSouth SWA TSBSA*** 2 or ***BellSouth SWA TSBSA 3***. (T)

The service provides the IC identification function and delivery of the call to the IC based on the first six digits of the dialed number. From the Company's SSP equipped end office, the IC identification function will be performed via a database look-up at the SCP. From non-SSP equipped end offices, the IC identification function will be performed by 500 NXX screening.

A more detailed description of ***BellSouth SWA 500*** service is set forth in E6.2.10 following. (T)

F. ***BellSouth SWA 8XX Toll Free Dialing*** Ten Digit Screening Service (T)

BellSouth SWA 8XX Toll Free Dialing Ten Digit Screening Service is an originating service that is provided via ***BellSouth SWA 8XX Toll Free Dialing Ten Digit Screening*** Service trunk groups. ***BellSouth SWA 8XX Toll Free Dialing Ten Digit Screening*** Service trunk groups, from the Company's SSP equipped end office or access tandem to the IC, will be provided in conjunction with ***BellSouth SWA*** FGD or ***BellSouth SWA TSBSA 3***. The service provides an IC identification function and delivery of call to the IC based on the dialed ten digit number. (T)

A more detailed description of ***BellSouth SWA 8XX Toll Free Dialing*** Ten Digit Screening Service is provided in E6.2.6 following. (T)

G. ***BellSouth SWA 900*** Service (T)

BellSouth SWA 900 service is an originating service that is provided via ***BellSouth SWA 900*** Trunk Groups. ***BellSouth SWA 900*** Trunk Groups will be provided in conjunction with ***BellSouth SWA*** FGC, ***BellSouth SWA*** FGD, ***BellSouth SWA TSBSA*** 2 or ***BellSouth SWA TSBSA 3*** or in accordance with the technical characteristics of ***BellSouth SWA*** FGC, ***BellSouth SWA*** FGD, ***BellSouth SWA TSBSA*** 2 or ***BellSouth SWA TSBSA 3***. The service provides the IC identification function (900 NXX screening) based on the first six digits of the dialed 900 call, which determines the IC to which the call is to be routed based on the NXX dialed. (T)

A more detailed description of ***BellSouth SWA 900*** service is set forth in E6.2.7 following. (T)

H. ***BellSouth SWA*** LSBSA (T)

BellSouth SWA LSBSA, which is available to all ICs, provides line side access to Company end office switches with an associated seven digit local telephone number for the IC's use in originating and terminating communications to another customer's intrastate service or an IC provided intrastate communications capability. The IC must specify the Interexchange Carrier to which ***BellSouth SWA LSBSA*** is connected or in the alternative, specify the means by which the ***BellSouth SWA*** LSBSA access communications are transported to another state. A more detailed description of ***BellSouth SWA*** LSBSA is provided in E6.2.8 following. (T)

E6. BELLSOUTH SWA SERVICE

E6.1 General (Cont'd)

E6.1.1 BellSouth SWA Service Arrangements and Manner of Provision (Cont'd)

I. BellSouth SWA TSBSA

1. BellSouth SWA TSBSA 1

BellSouth SWA TSBSA 1, which is available to all ICs, provides trunk side access to Company end office switches with an associated uniform 950-0XXX or 950-1XXX access code for the IC's use in originating and terminating communications to an Interexchange Carrier's intrastate service or an IC provided intrastate communications capability. The IC must specify the Interexchange Carrier to which the BellSouth SWA TSBSA 1 service is connected or, in the alternative, specify the means by which the BellSouth SWA TSBSA 1 access communications are transported to another state. A more detailed description of BellSouth SWA TSBSA 1 is provided in E6.2.9.A.

2. BellSouth SWA TSBSA 2

BellSouth SWA TSBSA 2, which is available only to providers of MTS and WATS, provides trunk side access to Company end office switches for the IC's use in originating and terminating communications. This service is available in all end offices, which are not equipped for BellSouth SWA TSBSA 3 end office switching. Existing BellSouth SWA TSBSA 2 access will be converted to BellSouth SWA TSBSA 3 when it becomes available in an end office. A more detailed description of BellSouth SWA TSBSA 2 is provided in E6.2.9.B.

3. BellSouth SWA TSBSA 3

BellSouth SWA TSBSA 3, which is available to all ICs, provides trunk side access to Company end office switches with an associated uniform 101XXXX access code for the IC's use in originating and terminating communications. As an option, BellSouth SWA TSBSA 3 is also available, where technically feasible, with an associated uniform 950-XXXX access code for the IC's use in originating and terminating traffic. This service may be presubscribed to by a primary Interexchange Carrier. A more detailed description of BellSouth SWA TSBSA 3 is provided in E6.2.9.C.

J. Manner of Provision

BellSouth SWA Service Arrangements are furnished in either quantities of lines or trunks. BellSouth SWA FGA and BellSouth SWA LSBSA Access are furnished on a per-line basis and BellSouth SWA FGB and BellSouth SWA TSBSA 1 are furnished on a per-trunk basis. BellSouth SWA FGC, BellSouth SWA FGD, BellSouth SWA TSBSA 2 and BellSouth SWA TSBSA 3 are furnished on a trunk basis as set forth in Section E5.preceding.

Trunks are differentiated by type and directionality of traffic carried over a BellSouth SWA service arrangement.

There are four major traffic types. These are: Originating, Terminating, Directory Assistance, Inward Operator Services and ***CCS7 Access Arrangement.*** The originating traffic type represents access capacity within a LATA for carrying traffic from the end user to the IC; the terminating traffic type represents access capacity within a LATA for carrying traffic from the IC to the end user; the Directory Assistance traffic type represents access capacity within a LATA for carrying Directory Assistance traffic from the IC to a Directory Assistance location; and the Inward Operator Services traffic type represents access within a LATA for carrying Inward Operator Services traffic from the IC to the Inward Operator Services location. ***The CCS7 Access traffic type represents access for services requiring use of the Company CCS7 network.*** (C)

E6. BELLSOUTH SWA SERVICE

E6.1 General (Cont'd)

E6.1.1 BellSouth SWA Service Arrangements and Manner of Provision (Cont'd)

J. Manner of Provision (Cont'd)

When an End User(s) orders BellSouth SWA FGB or BellSouth SWA TSBSA 1, the End User must at a minimum specify such access in terms of originating traffic type and/or terminating traffic type.

When ordering BellSouth SWA FGB, BellSouth SWA FGC, BellSouth SWA FGD, or BellSouth SWA TSBSA, the IC must at a minimum specify such access in terms of Originating traffic type and/or Terminating traffic type. Directory Assistance traffic type is as set forth in Section E9. ***of this Tariff.*** The Inward Operator Services traffic type is used for ordering BellSouth Inward Operator Services as set forth in Section E18. ***of this Tariff.*** (T)

Because some ICs will wish to further segregate their originating BellSouth SWA FGC, BellSouth SWA FGD, BellSouth SWA TSBSA 2 or BellSouth SWA TSBSA 3 traffic into separate trunk groups, Originating traffic type is further categorized into Domestic, 500, 800, 900, and Operator. Domestic traffic type represents access for carrying only domestic traffic other than 500, 800, 900 and Operator traffic; and 500, 800, 900 and Operator traffic type represents access for carrying, respectively, only BellSouth SWA 500, BellSouth SWA 8XX Toll Free Dialing Ten Digit Screening Service, BellSouth SWA 900 or Operator traffic. When ordering such types of access, the IC must specify Domestic, 500, 800, 900 or Operator traffic type.

When ordering CCS7 access, the customer must order the required number of CCS7 Signaling Connections and CCS7 Signaling Terminations. (N)

E6.1.2 BellSouth SWA WATS Service

BellSouth SWA WATS Service is provided only for use with BellSouth SWA FGC, BellSouth SWA FGD, BellSouth SWA TSBSA 2 and BellSouth SWA TSBSA 3 originating and terminating. BellSouth SWA WATS Service connects an end user premises with a WATS or WATS-type serving office.

"1+" and "0" intraLATA usage carried over outward BellSouth SWA WATS Service, having both intra and interstate capability (bijurisdictional) and provided from the BellSouth Telecommunications, Inc. Tariff FCC No. 1 or other appropriate Local Exchange Carrier (LEC) interstate tariff, will be completed over LEC facilities at LEC intraLATA outward WATS rates and subject to rules and regulations applicable to LEC intraLATA outward WATS. Subscribers using a bijurisdictional access line for BellSouth SWA 8XX Toll Free Dialing Ten Digit Screening Service may choose either the Company or the interexchange carrier to complete and bill intraLATA calls according to the appropriate rates, rules and regulations. The "1+" and "0" intraLATA usage will be billed to the customer (end user or IC) where the closed end of the bijurisdictional BellSouth SWA WATS Service is terminated. Customer billing information must be provided to the Company at the time the bijurisdictional WATS Access Line BellSouth SWA WATS Service is ordered when the Company is used to complete intraLATA calls. Local calling, seven digit access to originating intrastate BellSouth SWA FGA, BellSouth SWA FGB, BellSouth SWA LSBSA and BellSouth SWA TSBSA 1 service and "700" dialed access is prohibited.

E6.1.3 Rate Categories

The rate categories which apply to Service:

- BellSouth SWA Transport (described in E6.1.3.A. following)
- Local Switching (described in E6.1.3.B. following)
- BellSouth SWA WATS Service (described in E6.1.3.C. following)
- Common Line (described in Section E3. ***of this Tariff***) (T)
- 800 Database (described in E6.1.3.E. following)
- BellSouth SWA 500 service (described in E6.1.3.D. following)

E6. BELLSOUTH SWA SERVICE (T)

E6.1 General (Cont'd)

E6.1.3 Rate Categories (Cont'd)

The following diagram depicts a generic view, with the exception of ***BellSouth SWA 500*** service and 800 Database, of the components of ***BellSouth SWA*** service and the manner in which the components are combined to provide a complete access service. (T)

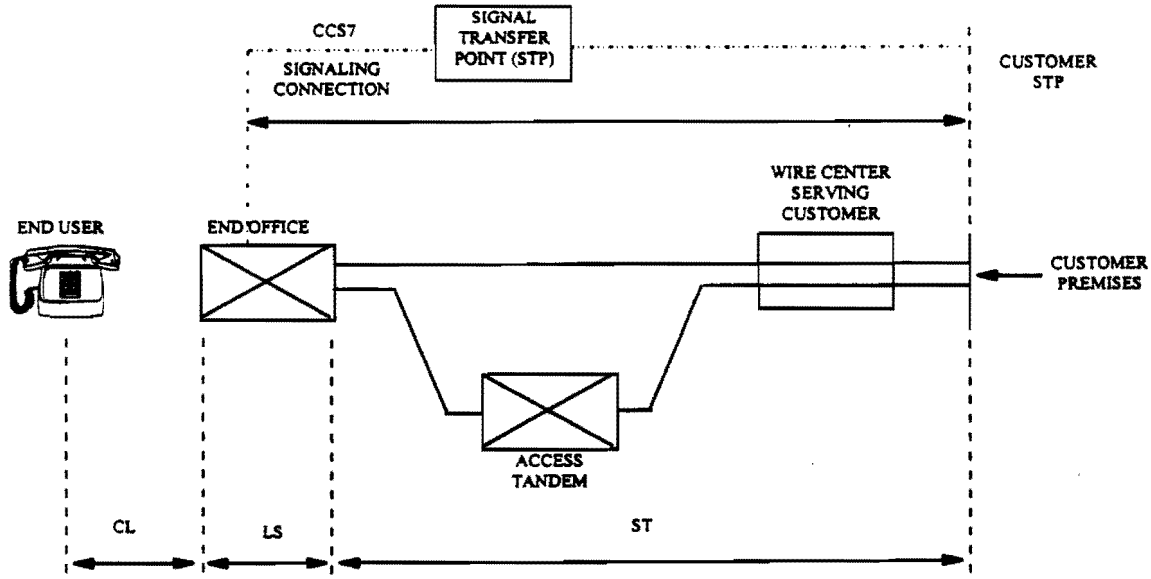

ST-***BELLSOUTH SWA*** TRANSPORT (T)
LS-LOCAL SWITCHING
CL-COMMON LINE

E6. BELLSOUTH SWA SERVICE

E6.1 General (Cont'd)

E6.1.3 Rate Categories (Cont'd)

LS - Local Switching

BellSouth SWA Transport

A. BellSouth SWA Transport

The BellSouth SWA Transport rate category provides the transmission facilities and equipment between:

- the IC's premises and the IC's serving wire center;
- the IC's serving wire center and the end office switch(es);
- the end office switch(es) and the access tandem and;
- the IC's serving wire center and the access tandem.

The IC's traffic is switched at the end office to originate or terminate the IC's communications.

BellSouth SWA Transport is a voice frequency transmission path composed of facilities determined by the Company or as ordered by the IC. The voice frequency transmission path permits the transport of calls in the originating direction (from the end user end office switch to the IC's terminal location) and in the terminating direction (from the IC's terminal location to the end office switch), but not simultaneously. The voice frequency transmission path may be comprised of any form or configuration of plant capable of and typically used in the telecommunications industry for the transmission of voice and associated telephone signals within the frequency bandwidth of approximately 300 to 3000 Hz.

For purposes of determining the type of BellSouth SWA Transport to be used, the IC must designate if the service is to be directly routed to the end office(s) switch or routed through the Access Tandem.

The Company will work cooperatively with the IC in determining: (1) whether the service is to be directly routed to an end office; (2) whether the service is to be routed via the access tandem; (3) whether the service is to be routed through a TOPS tandem; and (4) the directionality of the service.

In addition, when the IC has ordered BellSouth SWA FGD or BellSouth SWA TSBSA 3 in association with switched digital 56 kbps (e.g., AccuPulse® service) services switching capability feature as set forth in ***9.*** following, the Company will assure that facilities it provides are capable of supporting 56 kbps digital data. (T)

When the IC has ordered BellSouth SWA FGD or BellSouth SWA TSBSA 3 with the BellSouth SWA CCSAC optional feature, as set forth in ***9.*** following, the Company will provide the BellSouth SWA CCSAC option in accordance with the technical specifications set forth in Technical Publication TR-TSV-000905, and the BellSouth Guidelines to Technical Publication TR-TSV-000905. (T)

When the IC has ordered BellSouth SWA FGD or BellSouth SWA TSBSA 3 with the 64 Clear Channel Capability (CCC) optional feature, as set forth in ***E6.1.3.A.*** following, the Company will provide the 64 CCC option in accordance with the Technical Publication TR-TSV-000962. (T)

® Registered Service Mark of BellSouth Intellectual Property Corporation

E6. BELLSOUTH SWA SERVICE

E6.1 General (Cont'd)

E6.1.3 Rate Categories (Cont'd)

A. BellSouth SWA Transport (Cont'd)

When the IC has ordered BellSouth SWA LSBSA service and any of the following BSEs, BCLID, SMDI, Make Busy/Night Transfer, Queuing (subelements including Call Waiting and Music After Delay Announcement Only), a Dedicated Network Access Line (DNAL) is required between the IC's premises and the Company's end office switch. The DNAL provides for the transport of data and control information through voice grade or program audio facilities. DNALs are further described in 6. following. DNALs are provided in accordance with technical references and publications TR-NPL-000335, PUB 41004 - Table 4, and TR-NPL-000337, and as specified in 6. and 7. following.

BellSouth SWA Transport is provided at the rates and charges set forth in E6.8.1.A. following. The application of these rates with respect to the different types of service is as set forth in E6.7.1. following.

The basic components applicable to BellSouth SWA Transport are Switched Local Channel, Switched Interoffice Channel (for BellSouth SWA Dedicated Transport and BellSouth SWA Common Transport), Off-Net BellSouth Managed Shared Ring service channels, Channelization Equipment, Access Tandem Switching, ***Dedicated Tandem Trunk Port Service*** and Interconnection. (C)

-These are defined following:

1. Switched Local Channel

The Switched Local Channel provides a communications path between the IC's premises and the serving wire center of that premises. Included as part of the Switched Local Channel is a standard channel interface arrangement which defines the technical characteristics associated with the type of facilities to which BellSouth SWA service is to be connected at the IC's point of termination. The Switched Local Channel is capable of carrying a combination of BellSouth SWA traffic types (e.g. BellSouth SWA FGs, BellSouth SWA 8XX Toll Free Dialing Ten Digit Screening Service and BellSouth SWA 900 service, etc.).

The Switched Local Channel rate is assessed a monthly fixed charge based on the capacity (e.g., Voice Grade, DS1, DS3) ordered. This charge will also apply when the IC premises and the serving wire center are located in the same Company building. A Switched Local Channel will be applicable when associated with services ordered by End Users which are utilizing a Company-provided, end office based private network switching system.

2. Switched Interoffice Channel

The Switched Interoffice Channel provides a transmission facility and the Facility Termination. The Facility Termination applies for each Switched Interoffice Channel terminated.

Depending upon the IC's order for BellSouth SWA services, the Switched Interoffice Channel can be used for BellSouth SWA Dedicated Transport or BellSouth SWA Common Transport.

For-BellSouth SWA Dedicated Transport, the Switched Interoffice Channel can be provisioned between the following IC designated points: (1) the IC's serving wire center (SWC) and the Company end office switch(es), (2) the SWC and a Company Facility Hub (Hub) and, (3) the SWC and an Access Tandem, (4) a Hub and an Access Tandem, (5) a Hub to an end office and, (6) a Hub to a Hub.

For BellSouth SWA Common Transport, the Switched Interoffice Channel can be provisioned between the IC designated Company end office switch(es) ***and*** the Access Tandem. ***This includes*** transport between the Access Tandem and the end office, between an end office which serves as a host for a remote switching system or module (RSS or RSM) and the RSS or RSM and for terminating BellSouth SWA FGA between the dial tone office and the end office, the transport must be BellSouth SWA Common Transport. (C)

E6. BELLSOUTH SWA SERVICE

E6.1 General (Cont'd)

E6.1.3 Rate Categories (Cont'd)

A. BellSouth SWA Transport (Cont'd)

2. Switched Interoffice Channel (Cont'd)

Mileage measurement, for SWA Common Transport and SWA Dedicated Transport, is in accordance with E6.7.19, following.

(DELETED) (D)

a. Switched Dedicated Interoffice Channel

The Switched Dedicated Interoffice Channel (SW DIOC) rate category consists of two rate elements: (1) a Switched Dedicated Transport Interoffice Channel Facility, and (2) a BellSouth SWA Dedicated Transport Interoffice Channel Facility Termination.

The SW DIOC Facility is ordered by the IC based on capacity (e.g., Voice Grade, DS0, DS1 or DS3) and permits the transmission of calls or data in the originating direction and/or in the terminating direction depending upon the IC's facility configuration.

The Facility Termination component of the SW DIOC provides equipment necessary for the termination of the Switched Dedicated Interoffice Channel facility. A Facility Termination charge will apply for each service termination of greater than zero miles (i.e., Voice Grade, DS0, DS1 or DS3).

The SW DIOC transmission charge is a monthly, per mile charge based on the capacity of the service (e.g., Voice Grade, DS0, DS1 and/or DS3). The Facility Termination charge is assessed as a monthly rate.

b. Switched Common Interoffice Channel

The Switched Common Interoffice Channel (SW CIOC) is composed of BellSouth SWA Common Transport facilities as determined by the Company and permits the transmission of calls or data in the originating direction and/or terminating direction depending upon the IC's order.

The Facility Termination component of the SW CIOC provides for equipment necessary for the termination of the BellSouth SWA Common Interoffice Channel facility.

The SW CIOC transmission charge is a per minute of use, per mile charge. Facility Termination charges are assessed on a per minute of use of greater than zero miles.

3. Access Tandem Switching

Access Tandem Switching provides for the function of switching traffic from or to the Access Tandem from or to the end office switch(es). The Access Tandem Switching charge is assessed on all originating and terminating minutes of use switched at the Access Tandem.

E6. BELLSOUTH SWA SERVICE

E6.1 General (Cont'd)

E6.1.3 Rate Categories (Cont'd)

A. BellSouth SWA Transport (Cont'd)

4. Dedicated Tandem Trunk Port (N)

The Dedicated Tandem Trunk Port provides for termination of transport facilities at the Company tandem switch. This service is required for all BellSouth SWA Dedicated Transport ordered to the access tandem for switching at the tandem. It is available on a DS0/VG and DS1 trunk port basis. Rates and charges are set forth in E6.8.1 following. (N)

5. Interconnection (T)

The Interconnection charge shall be assessed upon all ICs interconnecting with the BellSouth SWA Network. Interconnection is applicable to all switched access originating and terminating minutes of use. ***Separate originating and terminating Interconnection charges are applicable for those ICs utilizing Company transport facilities and those ICs not using Company transport facilities to gain access to the Company switched network.*** (C)

The application of originating and terminating Interconnection rates on the originating end for BellSouth SWA FGA, BellSouth SWA LSBSA, 700, BellSouth SWA 8XX Toll Free Dialing Ten Digit Screening service and BellSouth SWA 900 service will follow the application of originating and terminating Carrier Common Line rates for those services as specified in E3.9.E of this Tariff. Interconnection rates are set forth in E6.8.1 following. (N)

6. Interface Group Arrangements (T)

Interface Group Arrangements, Interface Groups and Dedicated Network Access Lines (DNALs) are provided for terminating the BellSouth SWA Transport at the IC's terminal location. Each Interface Group and DNAL provides a specified premises interface (e.g., two-wire, four-wire, DS1, etc.). Where transmission facilities permit, the individual transmission path may be provided, at the option of the IC, with optional features as set forth in ***9.*** following. (T)

As a result of the IC's access order, the need for signaling conversions or two-wire to four-wire conversions, or the need to terminate digital or high frequency facilities in channelization equipment may be required to be provided by the IC at the IC's terminal location. For example, if a voice frequency interface is ordered by the IC and the facilities serving the IC's terminal location are digital, channelization equipment must be provided by the IC in order to provide the voice frequency interface ordered by the IC.

Interface Group 1 is provided with Type C Transmission Specifications, and Interface Groups 2, 6 and 9 are provided with Type A or B Transmission Specifications depending on the type of service and whether the BellSouth SWA service is routed directly or through an access tandem. All Interface Groups are provided with Data Transmission Parameters and the type signaling option ordered.

Only certain premises interfaces are available at the IC terminal locations. The premises interfaces associated with the Interface Group Arrangements may vary among different types of service. The various premises interfaces which are available with the Interface Group Arrangements, and the type of service with which they may be used, are set forth in E6.1.3. following.

a. Interface Group 1 (USOC TPP1X)

Interface Group 1, except as set forth in the following, provides two-wire voice frequency transmission at the point of termination at the IC terminal location. Interface Group 1 is capable of transmission of voice and associated telephone signals within the frequency bandwidth of approximately 300 to 3000 Hz.

Interface Group 1 is not provided in association with BellSouth SWA FGC, BellSouth SWA FGD, BellSouth SWA 500, BellSouth SWA 8XX Toll Free Dialing Ten Digit Screening Service or BellSouth SWA 900 service, BellSouth SWA TSBSA 2 and BellSouth SWA TSBSA 3 when the first point of switching is an access tandem. Access Tandem Switching charges are applicable to Interface Group 1 routed through an Access Tandem. In addition, Interface Group 1 is not provided in association with BellSouth SWA FGB, BellSouth SWA FGC, BellSouth SWA FGD, BellSouth SWA 500, BellSouth SWA 8XX Toll Free Dialing Ten Digit Screening Service or BellSouth SWA 900 service, or BellSouth SWA TSBSA when the first point of switching provides only four-wire terminations.

The transport between the point of termination at the IC terminal location and the IC's serving wire center will be comprised of facilities capable of and typically used in the telecommunications industry for the transmission of voice and associated telephone signals within the frequency bandwidth of 300 to 3000 Hz.

E6. BELLSOUTH SWA SERVICE

E6.1 General (Cont'd)

E6.1.3 Rate Categories (Cont'd)

A. BellSouth SWA Transport (Cont'd)

6. Interface Group Arrangements (Cont'd) (T)

a. Interface Group 1 (USOC TPP1X) (Cont'd)

The interface is provided with loop supervisory signaling. When the interface is associated with BellSouth SWA FGA or BellSouth SWA LSBSA, such signaling will be loop start or ground start signaling. When the interface is associated with BellSouth SWA FGB, BellSouth SWA FGC, BellSouth SWA FGD, BellSouth SWA 500, BellSouth SWA 8XX Toll Free Dialing Ten Digit Screening Service or BellSouth SWA 900 service, or BellSouth SWA TSBSA, such signaling, except for two-way calling which is E&M signaling, will be reverse battery signaling.

b. Interface Group 2 (USOC TPP2X)

Interface Group 2 provides four-wire voice frequency transmission at the point of termination at the IC terminal location. Interface Group 2 is capable of transmission of voice and associated telephone signals within the frequency bandwidth of approximately 300 to 3000 Hz.

The transport between the point of termination at the IC terminal location and the IC's serving wire center will be comprised of facilities capable of and typically used in the telecommunications industry for the transmission of voice and associated telephone signals within the frequency bandwidth of approximately 300 to 3000 Hz.

The interface is provided with loop supervisory signaling. When the interface is associated with BellSouth SWA FGA or BellSouth SWA LSBSA, such signaling will be loop start or ground start signaling. When the interface is associated with BellSouth SWA FGB, BellSouth SWA FGC, BellSouth SWA FGD, BellSouth SWA 500, BellSouth SWA 8XX Toll Free Dialing Ten Digit Screening Service or BellSouth SWA 900 service, or BellSouth SWA TSBSA, such signaling, except for two-way calling which is E&M signaling, will be reverse battery signaling.

c. Interface Group 6 (USOC TPP6X)

Interface Group 6 provides DS1 level digital transmission at the point of termination at the IC terminal location. The interface is capable of transmitting electrical signals at a nominal 1.544 Mbps, with the capability to channelize up to 24 voice frequency transmission paths.

Before the first point of switching, when analog switching utilizing analog terminations is provided, Channelization Equipment may be provided to derive 24 transmission paths of a frequency bandwidth of approximately 300 to 3000 Hz. When digital switching or analog switching with digital carrier terminations is provided, the Company will provide, at the IC's request, at the first point of switching, a DS1 signal in D3/D4 format.

The interface is provided with individual transmission path bit stream supervisory signaling.

d. Interface Group 9 (USOC TPP9X)

Interface Group 9 provides DS3 level digital transmission at the point of termination at the IC terminal location. The interface is capable of transmitting electrical signals at a nominal 44.736 Mbps, with the capability to channelize up to 672 voice frequency transmission paths. Before the first point of switching, Channelization Equipment will be necessary to derive up to 672 transmission paths of a frequency bandwidth of approximately 300 to 3000 Hz. When digital switching, or analog switching with digital carrier terminations is provided, the Company will provide, at the IC's request, at the first point of switching, DS1 signals in D4 format.

The interface is provided with individual transmission path bit stream supervisory signaling. (M)

Material appearing on this page previously appeared on page(s) 12 of this section.

E6. BELLSOUTH SWA SERVICE

E6.1 General (Cont'd)

E6.1.3 Rate Categories (Cont'd)

A. BellSouth SWA Transport (Cont'd)

6. Interface Group Arrangements (Cont'd) (T)

e. Dedicated Network Access Line (DNAL)

The DNAL provides a connection between the IC designated premises and a Company central office (which provides BellSouth SWA LSBSA dial tone) for connection to equipment that is not a part of the central office switch but which is used to provide the associated BSE. The DNAL is used only in conjunction with BellSouth SWA LSBSA BSE services requiring a separate link for transmitting data or control information as specified in E6.3.3. The BellSouth SWA LSBSA BSE service determines the requirement for speed, type, and number of DNALs.

DNAL Service is either a two-wire or four-wire channel providing either voice frequency transmission capability in the nominal frequency range of 200 to 3500 Hz, or program audio transmission capability in the nominal frequency range of 50 to 8000 Hz.

There are two basic rate categories which apply to DNALs. Each DNAL has one Switched Local Channel and one Switched Interoffice Channel as described following:

(1) DNAL Switched Local Channel

In general, the DNAL Switched Local Channel rate category provides for the communications path between the IC-designated premises and the serving wire center of that premises. One DNAL Switched Local Channel charge will apply per IC-designated premises at which the channel is terminated. This charge will also apply where the IC-designated premises and the serving wire center are located in the same Company building.

(2) DNAL Switched Interoffice Channel

The DNAL Switched Interoffice Channel rate category provides for the transmission facilities between the serving wire center of the IC designated premises and the serving wire center providing the associated BellSouth SWA LSBSA dial tone. DNAL Switched Interoffice Channel is portrayed in mileage bands. There are two rates that apply for each band (i.e., a flat rate per band and a rate per mile).

7. Available Premises Interface Codes (T)

Following is a matrix showing, for each Interface Group, which premises interface codes are available as a function of the Company switch supervisory signaling and the BellSouth SWA service arrangement. For BellSouth SWA 500 service, BellSouth SWA 8XX Toll Free Dialing Ten Digit Screening Service and BellSouth SWA 900 service, the premises interface codes are the same as those set forth for BellSouth SWA FGC and BellSouth SWA FGD. Additionally, premises interface codes for the unbundled access services (BellSouth SWA LSBSA and BellSouth SWA TSBSA) match that of the BellSouth SWA FGs as listed following. For explanations of these codes, see 3. following.

(M)

Material previously appearing on this page now appears on page(s) 11 of this section.

E6. BELLSOUTH SWA SERVICE

E6.1 General (Cont'd)

E6.1.3 Rate Categories (Cont'd)

A. BellSouth SWA Transport (Cont'd)

7. Available Premises Interface Codes (Cont'd) (T)

BellSouth SWA FG	BellSouth SWA Basic Serving Arrangements
FGA	BellSouth SWA LSBSA
FGB	BellSouth SWA TSBSA 1
FGC	BellSouth SWA TSBSA 2
FGD	BellSouth SWA TSBSA 3

For explanations of these codes, see Glossary of Channel Interface Codes in *8.* following. (T)

a. Interface Group 1

Company Switch Supervisory Signaling	Premises Interface Code	BellSouth SWA FG: FGA	FGB	FGC	FGD
LO	2LS2	X			
LO	2LS3	X			
GO	2GS2	X			
GO	2GS3	X			
LO, GO	2DX3	X			
LO, GO	4EA3-E	X			
LO, GO	4EA3-M	X			
LO, GO	6EB3-E	X			
LO, GO	6EB3-M	X			
RV, EA, EB, EC	2DX3		X	X	X
RV, EA, EB, EC	4EA3-E		X	X	X
RV, EA, EB, EC	4EA3-M		X	X	X
RV, EA, EB, EC	6EB3-E		X	X	X
RV, EA, EB, EC	6EB3-M		X	X	X
EA, EB, EC	6EC3			X	X
RV	2RV3-O		X	X	X
RV	2RV3-T		X	X	X
CCS	2NO2				X

E6. BELLSOUTH SWA SERVICE

E6.1 General (Cont'd)

E6.1.3 Rate Categories (Cont'd)

A. BellSouth SWA Transport (Cont'd)

7. Available Premises Interface Codes (Cont'd) (T)

b. Interface Group 2

Company Switch Supervisory Signaling	Premises Interface Code	BellSouth SWA FG: FGA	FGB	FGC	FGD
LO, GO	4SF2	X			
LO, GO	4SF2	X			
LO	4LS2	X			
LO	4LS3	X			
LO	6LS2	X			
GO	4GS2	X			
GO	4GS3	X			
GO	6GS2	X			
LO, GO	4DX2	X			
LO, GO	4DX3	X			
LO, GO	6EA2-E	X			
LO, GO	6EA2-M	X			
LO, GO	8EB2-E	X			
LO, GO	8EB2-M	X			
LO, GO	6EX2-B	X			
RV, EA, EB, EC	4SF2		X	X	X
RV, EA, EB, EC	4SF3		X		
RV, EA, EB, EC	4DX2		X	X	X
RV, EA, EB, EC	4DX3		X		
RV, EA, EB, EC	6DX2			X	
RV, EA, EB, EC	6EA2-E		X	X	X
RV, EA, EB, EC	6EA2-M		X	X	X
RV, EA, EB, EC	8EB2-E		X	X	X
RV, EA, EB, EC	8EB2-M		X	X	X
EA, EB, EC	8EC2-M			X	X
RV	4RV2-O		X	X	X
RV	4RV2-T		X	X	X
RV	4RV3-O		X	X	

E6. BELLSOUTH SWA SERVICE

E6.1 General (Cont'd)

E6.1.3 Rate Categories (Cont'd)

A. BellSouth SWA Transport (Cont'd)

7. Available Premises Interface Codes (Cont'd) (T)

b. Interface Group 2 (Cont'd)

Company Switch Supervisory Signaling	Premises Interface Code	BellSouth SWA FG: FGA	FGB	FGC	FGD
RV	4RV3-T		X	X	
CCS	4NO2				X

c. Interface Group 6

LO, GO	4DS9-15	X			
LO, GO	4DS9-15L	X			
RV, EA, EB, EC	4DS9-15		X	X	X
RV, EA, EB, EC	4DS9-15L		X	X	X
CCS	4DS9-15				X
CCSAC+	4DS9-15				X

d. Interface Group 9

LO, GO	4DS6-44	X			
LO, GO	4DS6-44L	X			
RV, EA, EB, EC	4DS6-44L		X	X	X
RV, EA, EB, EC	4DS6-44L		X	X	X
CCS	4DS6-44			X	

e. Dedicated Network Access Line Premises Interface Codes

The DNAL is provided only with the BellSouth SWA LSBSA BSEs - SMDI, BCLID, Make Busy/Night Transfer, and Queuing (subelements including Call Waiting and Music After Delay Announcement Only). The appropriate Company and premises interface codes are as follows:

Interface Group Arrangement	Associated BSE	Frequency Band	Company Interface Code	Premises Interface Code
DNAL	SMDI, BCLID	-	04DM-3	04DA2, 04DB2, 04DS9-15, 04DS9-31
	Make Busy/ Night Transfer	-	02DC8-4	02CC8-4, 04DS9-15-LS1[1,2]

Note 1: This service requires the end user to provide a contact closure. In the normal or open state the end user will provide a resistance greater than 30,000 ohms between the tip and ring leads. In the closed state the end user will provide 600 ohms or less across tip and ring.

The Company will provide a negative voltage on the tip lead and ground on the ring lead. The voltage will be in the range of 42.5 to 52.5 VDC. The loop current will be 16 to 50 mA.

Note 2: When the DS interface is required, only the loop closure function is used. Voice frequency service specifications are not supported on any channel using CC or DC interfaces. Additional information may be found in TR-TSY-000335.

E6. BELLSOUTH SWA SERVICE

E6.1 General (Cont'd)

E6.1.3 Rate Categories (Cont'd)

A. BellSouth SWA Transport (Cont'd)

7. Available Premises Interface Codes (Cont'd)

e. Dedicated Network Access Line Premises Interface Codes (Cont'd)

Interface Group Arrangement	Associated BSE	Frequency Band	Company Interface Code	Premises Interface Code
	Queuing-Call Waiting	-	02CC8	02DC8-4, 04DS9-15-L0[1,2]
	Queuing-Music After Delay	200-3500Hz	02PG-3	02PG1-3, 02PG2-3, 4DS9-15E
	Announcement	100-5000Hz	02PG-5	02PG1-5, 02PG2-5, 4DS9-15F
		50-8000Hz	02PG-8	02PG1-8, 02PG2-8, 4DS9-15G

Switched digital 56 kbps (e.g., AccuPulse® service) services switching capability transmission is provided only with BellSouth SWA FGD or BellSouth SWA TSBSA 3 using Interface Groups 6 and/or 9. Following is a matrix showing for Interface Groups 6 and 9 which premises interface codes are available as a function of the switched digital 56 kbps services level of digital transmission.

Interface Groups	Level of Transmission	Premises Interface Code
6	DS1	04DS9-15
9	DS3	04DS6-44

CCS7 optional feature is available with BellSouth SWA FGD or BellSouth SWA TSBSA 3 using Interface Groups 6 and/or 9. (N)
CCS7 Signaling Connections are provided using Interface 6 and/or 9. Following is a matrix showing for Interface Groups 6 and 9 which premises interface codes are available for CCS7 Signaling Connections as a function of CCSAC level of digital transmission.

Interface Groups	Level of Transmission	Premises Interface Code	
6	DS1	04DS9-15	(N)
9	DS3	04DS6-44	(N)

Note 1: When the DS interface is required, only the loop closure function is used. Voice frequency service specifications are not supported on any channel using CC or DC interfaces. Additional information may be found in TR-TSY-000335.

Note 2: With the DC interface the end user provides a voltage source. A negative voltage will be provided on the tip with ground provided on the ring. The open circuit tip-to-ring voltage shall not be more negative than 52.5 VDC. The voltage source shall be able to provide at least 16 mA to an external resistance of 2000 ohms.

®Registered Service Mark of BellSouth Corporation

E6. BELLSOUTH SWA SERVICE

E6.1 General (Cont'd)

E6.1.3 Rate Categories (Cont'd)

A. BellSouth SWA Transport (Cont'd)

8. Premises Interface Codes (T)

a. This paragraph explains the facility interface codes set forth in 2. preceding that the IC can specify when ordering BellSouth SWA service. Included is an example which explains the specific characters of the code, a glossary of premises interface codes and impedance levels.

Example: If the IC specifies a 4EA3-E premises interface at the IC terminal location, it is requesting the following:

4 .....Number of Physical wires at IC terminal location

EA..... Premises interface code for Type I, E&M lead signaling

3 .....Impedance

E .....IC at point of termination or end user at network interface

b. Glossary of Premises Interface Codes and Options

AH	Analog high capacity interface
- B	60 KHz to 108 KHz (12 channels)
- C	312 KHz to 552 KHz (60 channels)
- D	564 KHz to 3084 KHz (600 channels)
DS	Digital hierarchy interface
- 15	1.544 Mbps (DS1) format per PUB 41451 plus D4
- 15L	1.544 Mbps (DS1) with SF signaling
- 44	44.736 Mbps (DS3)
- 44L	44.736 Mbps (DS3) with SF signaling
DX	Duplex signaling interface at IC point of termination
EA	Type I, E&M lead signaling.
- E	IC at point of termination or IC's end user at network termination originates on E lead.
- M	IC at point of termination or IC's end user at network termination originates on M Lead.
EB	Type II, E&M lead signaling.
- E	IC at point of termination or IC's end user at network termination originates on E Lead.
- M	IC at point of termination or IC's end user at network termination originates on M lead.
EC	Type III, E&M signaling at IC terminal point of termination.
EX	Tandem channel unit signaling for loop start or ground start

E6. BELLSOUTH SWA SERVICE

E6.1 General (Cont'd)

E6.1.3 Rate Categories (Cont'd)

A. BellSouth SWA Transport (Cont'd)

8. Premises Interface Codes (Cont'd) (T)

b. Glossary of Premises Interface Codes and Options (Cont'd)

- A	IC supplies open end (dial tone, etc.) functions.
- B	IC supplies closed end (dial pulsing, etc.) functions.
GS	Ground start loop signaling - closed end functions by IC or IC's end user
LS	Loop start loop signaling - closed end functions by IC or IC's end user
RV	Reverse battery signaling
- O	One way operation, originate by IC.
- T	One way operation, terminate function by IC or IC's end user.
SF	Single frequency signaling within VF band at either IC point of termination or IC's end user network termination

c. Impedance

The nominal reference impedance with which the channel will be terminated for the purposes of evaluating transmission performance.

Value (ohms)	Code(s)
110	0
600	2
900	3
135	5
75	6
100	9

d. Digital Hierarchy Facility Interface Codes

This premises interface is available only to IC's that select the multiplexed four-wire DSX-1 or higher facility interface option at the IC terminal location and provide subsequent system and channel assignment data.

The various digital bit rates in the digital hierarchy employ the facility interface code 4DS9, 4DS0 or 4DS6 plus the speed options indicated following:

Interface Code and Speed Option	Nominal Bit Rate (Mbps)	Digital Hierarchy Level	
4DS9-15	1.544	DS1	
4DS9-15L	1.544	DS1	
4DS6-44	44.736	DS3	(M)
4DS6-44L	44.736	DS3	(M)

Material appearing on this page previously appeared on page(s) 19 of this section.

E6. BELLSOUTH SWA SERVICE

E6.1 General (Cont'd)

E6.1.3 Rate Categories (Cont'd)

A. BellSouth SWA Transport (Cont'd)

9. Optional Features (T)

Where transmission facilities permit, the Company will, at the option of the IC, provide the following optional features in association with BellSouth SWA Transport. The optional features are provided as set forth in E6.8.1.D. following.

a. Supervisory Signaling

Where the transmission parameters permit, and where signaling conversion is required by the IC to meet its signaling capability, the IC may order an optional supervisory signaling arrangement for each transmission path provided as follows:

- For Interface Groups 1 and 2

  DX Supervisory Signaling,
  E&M Type I Supervisory Signaling,
  E&M Type II Supervisory Signaling, or
  E&M Type III Supervisory Signaling

- For Interface Group 2

  SF Supervisory Signaling or
  Tandem Supervisory Signaling

- For Interface Groups 6 and 9

  These Interface Groups may, at the option of the IC, be provided with individual transmission path SF supervisory signaling where such signaling is available in Company central offices. Generally such signaling is available only where the entry switch provides an analog (i.e., non-digital) interface to the BellSouth SWA Transport termination and a portion of the facility between the analog entry switch and the IC's terminal location is analog.

These optional supervisory signaling arrangements are not available in combination with the BellSouth SWA CCSAC option, as specified in e. following. (T)

b. IC Specified Entry Switch Receive Level

This feature allows the IC to specify the receive transmission level at the first point of switching. The range of transmission levels which may be specified is described in Technical Reference TR-NPL-000334. This feature is available with Interface Groups 2, 6 and/or 9 for BellSouth SWA FGA, BellSouth SWA FGB, BellSouth SWA LSBSA and BellSouth SWA TSBSA 1.

(M)

Material previously appearing on this page now appears on page(s) 18 of this section.

E6. BELLSOUTH SWA SERVICE

E6.1 General (Cont'd)

E6.1.3 Rate Categories (Cont'd)

A. BellSouth SWA Transport (Cont'd)

9. Optional Features (Cont'd)

c. IC Specification of Switched Transport Termination

This option allows the IC to specify, for BellSouth SWA FGB or BellSouth SWA TSBSA 1 routed directly to an end office or access tandem, a four-wire termination of the BellSouth SWA Transport at the entry switch in lieu of a Company selected two-wire termination. This option is available only when the BellSouth SWA FGB or BellSouth SWA TSBSA 1 arrangement is provided with Type B Transmission Specifications.

d. Switched Digital 56 kbps (e.g., AccuPulse® service) Services

This option allows an IC to establish a connection between the IC's premises and a suitably equipped end user premises over facilities that are capable of transmitting 56 kbps digital data. This option requires the use of Interface Groups 6 and/or 9. It is provided to suitably equipped electronic end offices or access tandems and is available only with BellSouth SWA FGD or BellSouth SWA TSBSA 3.

e. BellSouth SWA CCSAC

This option allows the customer to receive signals for call set-up out of band. This option is available with BellSouth SWA FGD or BellSouth SWA TSBSA 3. (C)

This option requires the establishment of ~~a~~ CC*S7 S*ignaling *C*onnections ***and CCS7 Signaling Terminations*** between the customer's signaling point of interface and the Company Signal Transfer Point (STP). ***A minimum of one pair or quad of CCS7 Signaling Connections and Terminations is required as further described in E. following.*** (C)

®Registered Service Mark of BellSouth Corporation

E6. BELLSOUTH SWA SERVICE

E6.1 General (Cont'd)

E6.1.3 Rate Categories (Cont'd)

A. BellSouth SWA Transport (Cont'd)

9. Optional Features (Cont'd)

e. BellSouth SWA CCSAC (Cont'd)

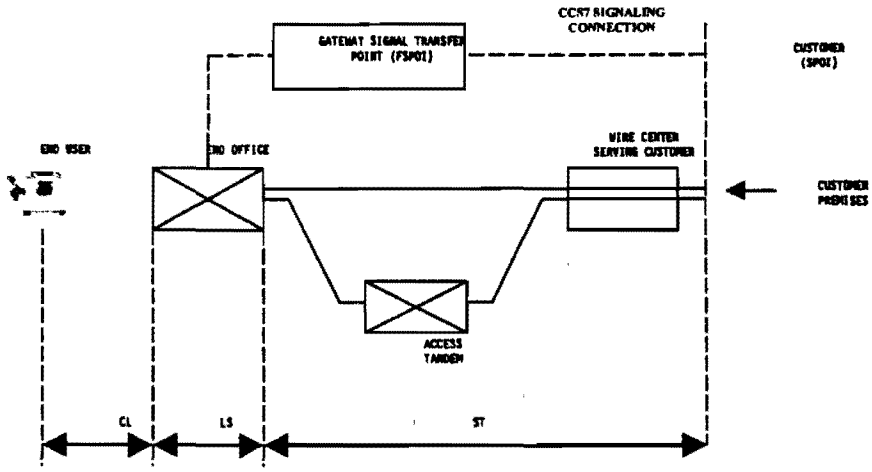

(C)

CL - Common Line
LS - Local Switching
ST - BellSouth SWA Transport

f. 64 Clear Channel Capability (CCC)

(1) Clear Channel Capability (CCC) is an arrangement that alters a DS1/1.544 Mbps signal with unconstrained information bits to meet pulse density requirements outlined in TR-NPL-000054 and TA-TSY-000342. This will allow an IC to transport an all-zero octet over a DS1/1.544 Mbps BellSouth SPA High Capacity channel and will provide an available combined maximum 1.536 Mbps data rate. This arrangement requires the IC signal at the channel interface to conform to Bipolar with eight (8) Zero Substitution (B8ZS) line code as described in Technical Reference TR-NPL-000054 and TR-INS-000342.

(2) This optional feature may be ordered at the same time the DS1/1.544 Mbps BellSouth SPA High Capacity is ordered, or it may be ordered as an additional feature of an existing DS1/1.544 Mbps BellSouth SPA High Capacity service.

E6. BELLSOUTH SWA SERVICE

E6.1 General (Cont'd)

E6.1.3 Rate Categories (Cont'd)

A. BellSouth SWA Transport (Cont'd)

9. Optional Features (Cont'd) (T)

f. 64 Clear Channel Capability (CCC) (Cont'd)

(3) When providing CCC via a DS3/44.736 Mbps BellSouth SPA High Capacity channel, that DS3 channel must be designated, in BellSouth records, as having Clear Channel Capability prior to the provisioning of a DS1/1.544 Mbps High Capacity channel with CCC. ICs must agree to out-of-service periods required to add this feature to: (1) an existing DS1/1.544 Mbps BellSouth SPA High Capacity channel or (2) a DS3/44.736 Mbps BellSouth SPA High Capacity channel which transports a DS1/1.544 Mbps BellSouth SPA High Capacity channel to be optioned for B8ZS.

g. TCAP Message Transmission

This option provides for the transmission of information corresponding to TIA Interim Standard 41 (Subsystems 005-010) over an IC's CCS7 Signaling Connection. TCAP Messages will be routed according to originating and destination point codes provided by the IC.

This option requires the utilization of CCS7 Signaling Connections and CCS7 Signaling Terminations between the IC's signaling point of interface and each of the Company's Local Signal Transfer Points (STPs) within the LATA.

This option is available where facilities and switching capability are available.

h. Coin Sent-Paid Capability

Coin sent-paid capability allows the IC to receive signals for coin sent-paid traffic from line controlled pay stations. This option requires the use of Exchange Access Operator Services Signaling (EAOSS) and/or Modified Operator Services Signaling (MOSS). Coin sent-paid capability access is provided in designated Company end offices or via tandem access at the TOPS tandem switches and is available with BellSouth SWA FGD or BellSouth SWA TSBSA 3.

Technical specifications for MOSS are as set forth in the Bell Communications Research Technical Publication TR-TSY-000064. Technical specifications for EAOSS are as set forth in the Bell Communications Research Technical Publication TR-TSY-0000271.

i. BellSouth SPA High Capacity and BellSouth SWA DS0 Transport Services

BellSouth SPA High Capacity services consist of BellSouth SWA DS1 and BellSouth SWA DS3 Local Channels and BellSouth SWA DS0, BellSouth SWA DS1 and BellSouth SWA DS3 Interoffice Channels. BellSouth SWA DS1 and BellSouth SWA DS3 Local Channels consists of a basic channel between the IC's premises and the IC's serving wire center.

For BellSouth SWA Dedicated Transport, the BellSouth SWA DS0 (Digital Voice Grade) and BellSouth SWA DS1 and BellSouth SWA DS3 Interoffice Channels are provided between the IC serving wire center to any of the following IC designated points: (1) the Company end office, (2) the Access Tandem, (3) Company Facility Hub (Hub), or between (4) a Hub and Company end office, or (5) a Hub and an Access Tandem and, (6) a Hub and a Hub. Channel type and service descriptions are provided in Section E7. ***of this Tariff.*** (T)

E6. BELLSOUTH SWA SERVICE

E6.1 General (Cont'd)

E6.1.3 Rate Categories (Cont'd)

A BellSouth SWA Transport (Cont'd)

9. Optional Features (Cont'd) (T)

i. BellSouth SPA High Capacity and BellSouth SWA DS0 Transport Services (Cont'd)

(1) BellSouth SWA DS0 Service

BellSouth SWA DS0 service (Digital Voice Grade) is a channel for duplex four-wire transmission at the rate of 56.0 and 64.0 Kbps. BellSouth SWA DS0 service is provided as a Switched Dedicated Interoffice Channel between the foregoing IC designated points.

(2) BellSouth SWA DS1 Service

BellSouth SWA DS1 service is a high capacity channel service provided between the IC premises and the IC's serving wire center as a Switched Local Channel to be associated with Interface Group 6. BellSouth SWA DS1 service can also be provided as a Switched Dedicated Interoffice Channel between the foregoing IC designated points.

(3) BellSouth SWA DS3 Service

BellSouth SWA DS3 service is a high capacity channel service provided between the IC premises and the IC's serving wire center as a Switched Local Channel to be associated with Interface Group 9. BellSouth SWA DS3 service can also be provided as a Switched Dedicated Interoffice Channel between the foregoing IC designated points.

Single DS3 Switched Local Channels are available for IC premises to IC serving wire center application. (T)
Channelization Equipment is required for DS3 level services whenever an IC orders lower capacity Switched Interoffice Channels or terminates in Company serving wire centers, Company Facility Hubs, and office switch(es) or Access Tandems. Company Facility Hubs offer digital channelization in accordance with E6.7.16 ***following*** and E7.4.7 ***of this Tariff***. For technical specifications, see Section E7. ***of this Tariff***. Rates specific to BellSouth SPA High Capacity and BellSouth SWA DS0 transport services are shown in E6.8.1 following.

(4) Channelization Equipment

Channelization Equipment (CE) provides for the multiplexing equipment necessary to channelize digital facilities to individual services requiring a lower capacity or bandwidth. Channelization equipment is required when: (1) Any facility carrying a combination of trunk side and line side services terminating to an end office switch; (2) Any termination of a DS3 facility, and (3) Any facility carrying a combination of BellSouth SWA and BellSouth SPA circuits terminates to an end office switch. Two levels of multiplexing are available: (1) DS3 to DS1; and (2) DS1 to DS0 or Analog. The NECA No. 4 identifies Company Offices (Facility Hubs) where multiplexing functions are available.

The CE rate category for DS1 level service consists of two rate elements: (1) Basic Channelization System; and (2) Central Office Channel Interface(s). The CE rate category for DS3 level service consists of two rate elements: (1) Switched DS3 Channelization System; and (2) the Central Office Channel Interface.

6. BELLSOUTH SWA SERVICE

E6.1 General (Cont'd)

E6.1.3 Rate Categories (Cont'd)

A. BellSouth SWA Transport (Cont'd)

9. Optional Features (Cont'd)

i. BellSouth SPA High Capacity and BellSouth SWA DS0 Transport Services (Cont'd)

(4) Channelization Equipment (Cont'd)

DS3 to DS1 - An arrangement that channelizes 44.736 Mbps channel to 28 DS1 channels.

DS1 Basic Channelization System - An arrangement that channelizes a 1.544 Mbps channel to a maximum of twenty-four (24) 64 Kbps channels. A DS1 Basic Channelization System requires a Central Office Channel Interface for each channel of lesser capacity.

A DS1 that is directly terminated into a digital switch is restricted to trunk side switched traffic and cannot be used for line side connections or BellSouth SPA Circuits.

A DS1 that is directly terminated into an analog switch is restricted to trunk side switched traffic and cannot be used for line side connections or Special Access Circuits.

The Central Office Channel Interface (COCI) rate element is necessary to activate the Sub DS1 Service capable of carrying Switched Access traffic. The COCI is required in addition to the Basic Channelization System.

Rates applicable to the Channelization Systems and the applicable Central Office Channel Interfaces are provided in E6.8.1 following.

j. Channelization for Common Transport Interoffice Channels

(1) DS3 to DS1 Multiplexer

This rate element is for use of DS3 to DS1 multiplexer equipment within the Company common transport network and is required for ICs utilizing BellSouth SWA Common Transport. The rate element applies for each BellSouth SWA Common Transport minute of use between the access tandem and the end office, as well as for each minute of use between a host and remote end office, and each terminating minute of use between a host and remote end office, and each terminating minute of use between a BellSouth SWA FGA or BellSouth SWA LSBSA dial tone office and the end office. The rate for this element is found in E6.8.1 following.

(2) DS1 to VG Multiplexer

This rate element is for DS1 to VG multiplexer equipment within the Company common transport network on the end office side of analog access tandem switches. This element is required for ICs utilizing BellSouth SWA Common Transport with an analog tandem switch. The rate for this element is found in E6.8.1 following.

k. Tandem Signaling

This option provides for the automatic transmission of signaling indicators, which identify the interexchange carrier and trunk group to which the call is to be directed. This option, available with BellSouth SWA FGD, is provided on originating direct trunk groups.

Direct trunk groups equipped with tandem signaling can be arranged to overflow to other direct trunk groups equipped with tandem signaling. Direct trunk groups equipped with tandem signaling cannot be arranged to overflow to the Company's common trunk groups.

Depending on the signaling facilities available, this option will be provisioned via MF or CCS7 signaling. The CCS7 alternative requires the establishment of; 1) BellSouth SWA CCSAC as described in e. preceding and 2) CCS7 Signaling Connections and CCS7 Signaling Terminations, ***as further described in E. following.*** (C)

E6. BELLSOUTH SWA SERVICE

E6.1 General (Cont'd)

E6.1.3 Rate Categories (Cont'd)

A. BellSouth SWA Transport (Cont'd)

10. BellSouth Dedicated Ring (T)

a. The BellSouth Dedicated Ring configuration utilizes a multi-nodal ring architecture which is specified jointly by the Telephone Company and the customer. The minimum configuration provides dedicated DS3 and/or DS1 digital services and must include at least three nodes. The three nodes may all be Central Office Nodes in Telephone Company Central Offices, or the three nodes may be a Central Office Node in Telephone Company Central Office, a Customer Node at a customer's designated location and the third node may be either a Central Office Node or a node at a another customer designated location. Additional nodes for either arrangement may be any combination thereof. The maximum number of nodes will be determined based on equipment capability. The nodes are connected by BellSouth Dedicated Ring Local Channels, Alternate Central Office Channels, Interoffice Channels and Internodal Channels as applicable. BellSouth Dedicated Ring may be connected to other BellSouth SWA services only at Central Office Nodes. When BellSouth Dedicated Ring works with OC-12 SMARTRing® service (a.k.a. BellSouth Dedicated Ring) installed on or after June 3, 1994, and with OC-48 and OC-48+ SMARTRing® service (a.k.a. BellSouth Dedicated Ring), the customer may request an OC-1 and/or OC-3 Overlay Ring Arrangement riding the customer's host OC-12, OC-48, or OC-48+ SMARTRing® service (a.k.a. BellSouth Dedicated Ring). With OC-48 BellSouth Dedicated Ring, the customer may request an OC3+ and/or OC-12 Overlay Ring Arrangement riding the customer's host OC-48 BellSouth Dedicated Ring.

b. Applicable rate elements for this service are:

(1) Local Channel (at least one for each Customer Node which is directly connected to the serving wire center)

The Local Channel rate category provides for the communications path between a Customer Node and the serving wire center of the premises where located. Charges for Local Channels apply as described in paragraph E6.1.3 .A preceding. It is available with all capacities of BellSouth Dedicated Ring except OC-1.

(2) Alternate Central Office Channel (at least one for each Customer Node which is directly connected to an Alternate Central Office)

The Alternate Central Office Channel provides for the communications path between a customer node and an alternate central office. It is available with all capacities of BellSouth Dedicated Ring except OC-1.

(3) Interoffice Channel (one for each path between each two directly connected Telephone Company Central Offices)

The Interoffice Channel provides for the communications path between directly connected Telephone Company central offices located on a BellSouth Dedicated Ring. It is available with all capacities of BellSouth Dedicated Ring except OC-1. This rate element does not apply where Central Office Nodes are adjacently connected in the same Central Office on the same Dedicated Ring for the purpose of providing additional node capacity.

(4) Internodal Channel (one for each path between two directly connected customer nodes)

The Internodal Channel provides for the communications path between two directly connected Customer Nodes of a given BellSouth Dedicated Ring located (a) in the same Serving Wire Center area or (b) in the same Office Park/Campus Environment or contiguous property, located in contiguous Serving Wire Center areas. It is available with all capacities of BellSouth Dedicated Ring except OC-1. This rate element does not apply where Customer Nodes are adjacently connected in the same building on the same Dedicated Ring for the purpose of providing additional node capacity.

(5) Customer Node (at least one for configurations other than three Central Office Node arrangement)

Customer Nodes provide ring switching capabilities at customer designated locations other than Telephone Company Premises that are part of BellSouth Dedicated Ring. This rate element offers OC-3, OC-3+, OC-12, OC-48, or OC-48+ network capacities. A summary of the channel interfaces available with each node are specified in E6.2.11.A following.

® Registered Service Mark of BellSouth Corporation

E6. BELLSOUTH SWA SERVICE

E6.1 General (Cont'd)

E6.1.3 Rate Categories (Cont'd)

A. BellSouth SWA Transport (Cont'd)

10. BellSouth Dedicated Ring (Cont'd) (T)

b. Applicable rate elements for this service are: (Cont'd)

(6) Customer Channel Interface (one for each originating/terminating activated DS1, DS3, STS-1, OC-3, and/or OC-12 for each Customer Node)

A Customer Channel Interface provides DS1, DS3, STS-1 electrical channelization and/or OC-3 and/or OC-12 optical channelization that may take place at each Customer Node of BellSouth Dedicated Ring. The Customer Channel Interface rate element applies for every interface capacity that originates or terminates at aCustomer Node. A summary of the channel interfaces available with each node are specified in E6.2.11.A following.

(7) Central Office Node (at least one for configurations other than three Central Office Node arrangement)

Central Office Nodes provide ring switching capabilities at Telephone Company Central Offices that are a part of BellSouth Dedicated Ring. This rate element offers OC-3, OC-3+, OC-12, OC-48, and OC-48+ network capacities. A summary of the channel interfaces available with each node are specified in E6.2.11.A following.

(8) Central Office Channel Interface (one for each originating/terminating activated DS1, DS3, STS-1, OC-3 and/or OC-12 for each Central Office Node or one for each 28 DS1 Channel System and associated DS1 Channel Interfaces for each activated DS3)

A Central Office Channel Interface provides DS1, DS3, STS-1 electrical channelization and/or OC-3 and/or OC-12 optical channelization that may take place at each Central Office Node located on a BellSouth SPA Dedicated Ring. The Central Office Channel Interface rate element applies for every interface capacity that originates or terminates at a Central Office Node. A summary of the channel interfaces available with each node are specified in E6.2.11.A following.

(9) Channel Interface Capacity Reallocation (one per node per occurrence)

Channel Interface Capacity Reallocation allows the customer to reallocate STS-1, DS3 and/or DS1 capacity interfaces at each node subsequent to the initial service installation.

E6. BELLSOUTH SWA SERVICE

E6.1 General (Cont'd)

E6.1.3 Rate Categories (Cont'd)

A. BellSouth SWA Transport (Cont'd)

10. BellSouth Dedicated Ring (Cont'd) (T)

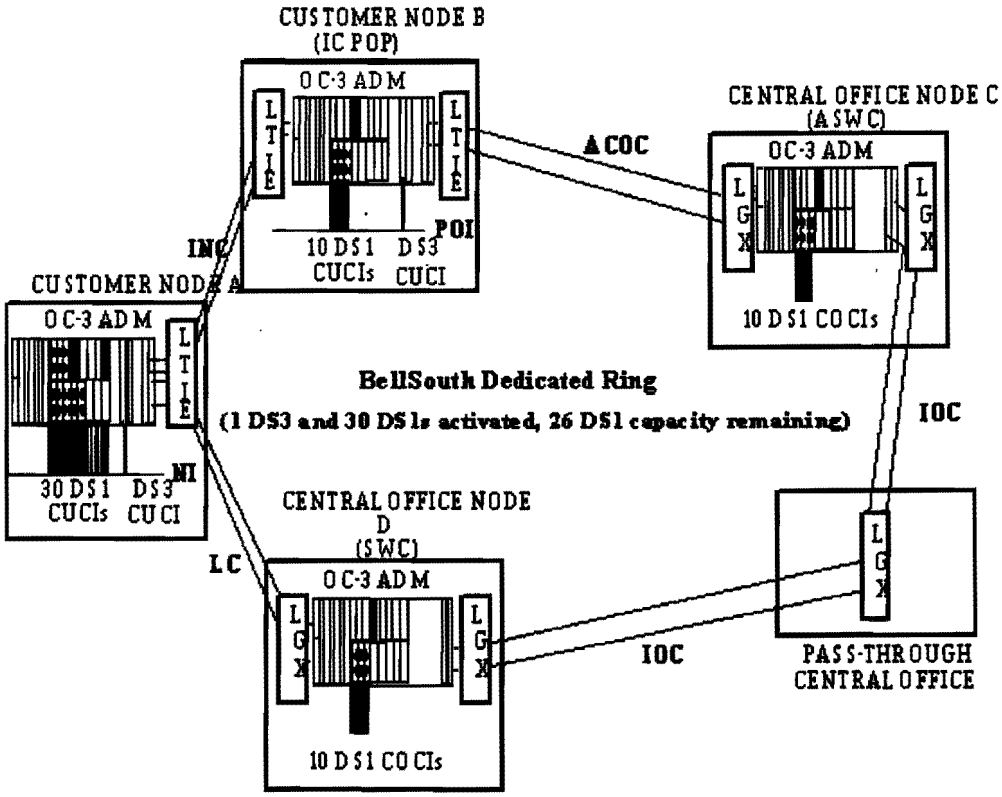

Example: BellSouth Dedicated Ring OC-3 capacity

For this example the following rate elements are applicable:

- 2 Customer Nodes
- 2 Central Office Nodes
- 1 Local Channel
- 1 Internodal Channel
- 1 Alternate Central Office Channel
- 2 Interoffice Channels
- 2 DS3 Customer Channel Interfaces
- 40 DS1 Customer Channel Interfaces
- 20 DS1 Central Office Channel Interface

E6. BELLSOUTH SWA SERVICE

E6.1 General (Cont'd)

E6.1.3 Rate Categories (Cont'd)

A. BellSouth SWA Transport (Cont'd)

10. BellSouth Dedicated Ring (Cont'd) (T)

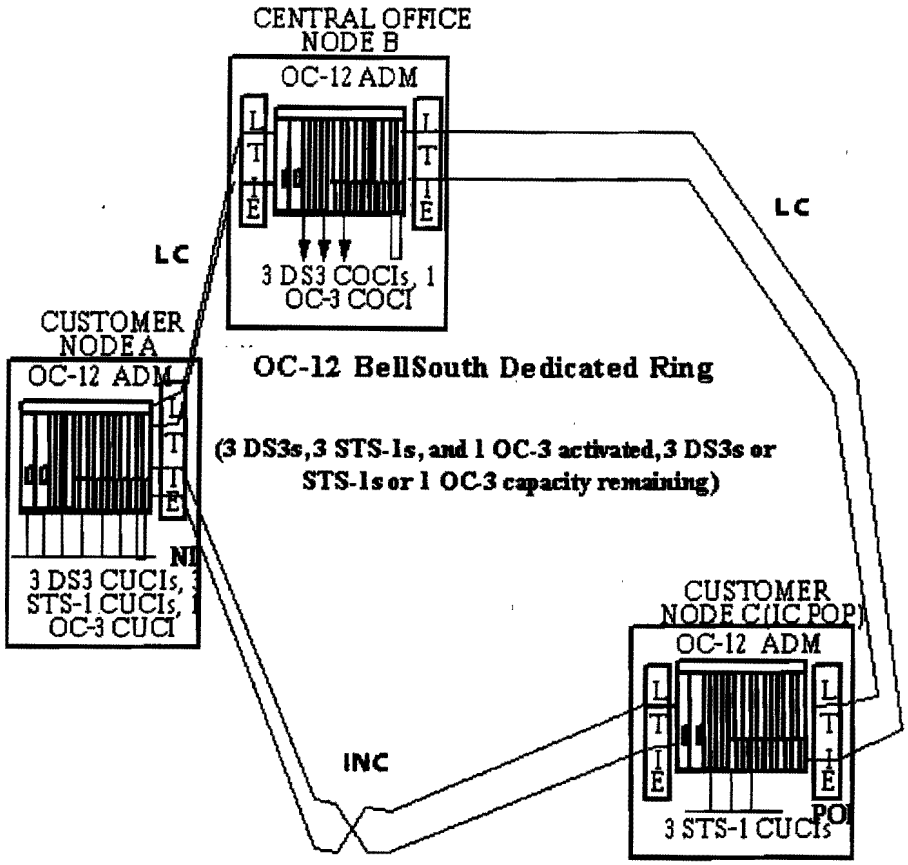

Example: BellSouth Dedicated Ring OC-12 capacity

For this example the following rate elements are applicable:

- 2 Customer Nodes
- 1 Central Office Node
- 2 Local Channels
- 1 Internodal Channel
- 3 DS3 Customer Channel Interfaces
- 3 DS3 Central Office Channel Interfaces
- 6 STS-1 Customer Channel Interfaces
- 1 OC-3 Customer Channel Interface
- 1 OC-3 Central Office Channel Interface

E6. BELLSOUTH SWA SERVICE

E6.1 General (Cont'd)

E6.1.3 Rate Categories (Cont'd)

A. BellSouth SWA Transport (Cont'd)

10. BellSouth Dedicated Ring (Cont'd) (T)

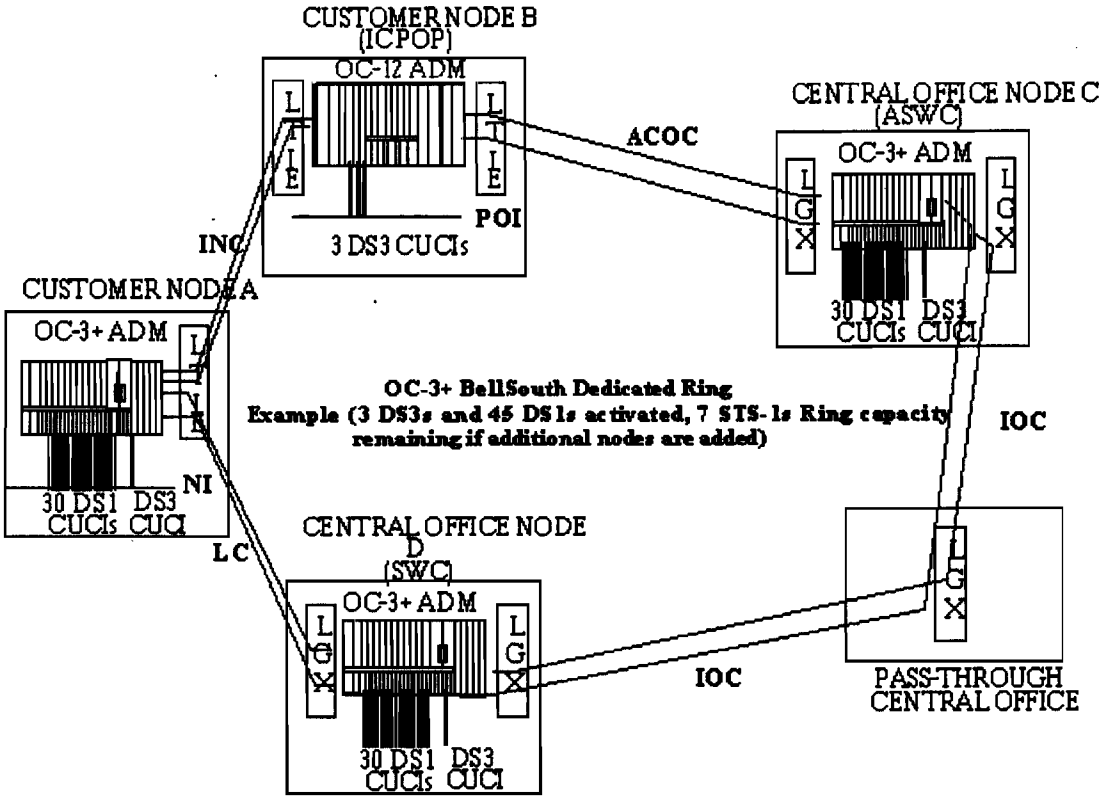

Example: BellSouth Dedicated Ring OC-3+ capacity.

For this example the following rate elements are applicable:

- 2 Customer Nodes
- 2 Central Office Nodes
- 1 Local Channel
- 1 Internodal Channel
- 1 Alternate Central Office Channel
- 2 Interoffice Channels
- 4 DS3 Customer Channel Interfaces
- 2 DS3 Central Office Channel Interfaces
- 30 DS1 Customer Channel Interfaces
- 60 DS1 Central Office Channel Interfaces

E6. BELLSOUTH SWA SERVICE

E6.1 General (Cont'd)

E6.1.3 Rate Categories (Cont'd)

A. BellSouth SWA Transport (Cont'd)

10. BellSouth Dedicated Ring (Cont'd) (T)

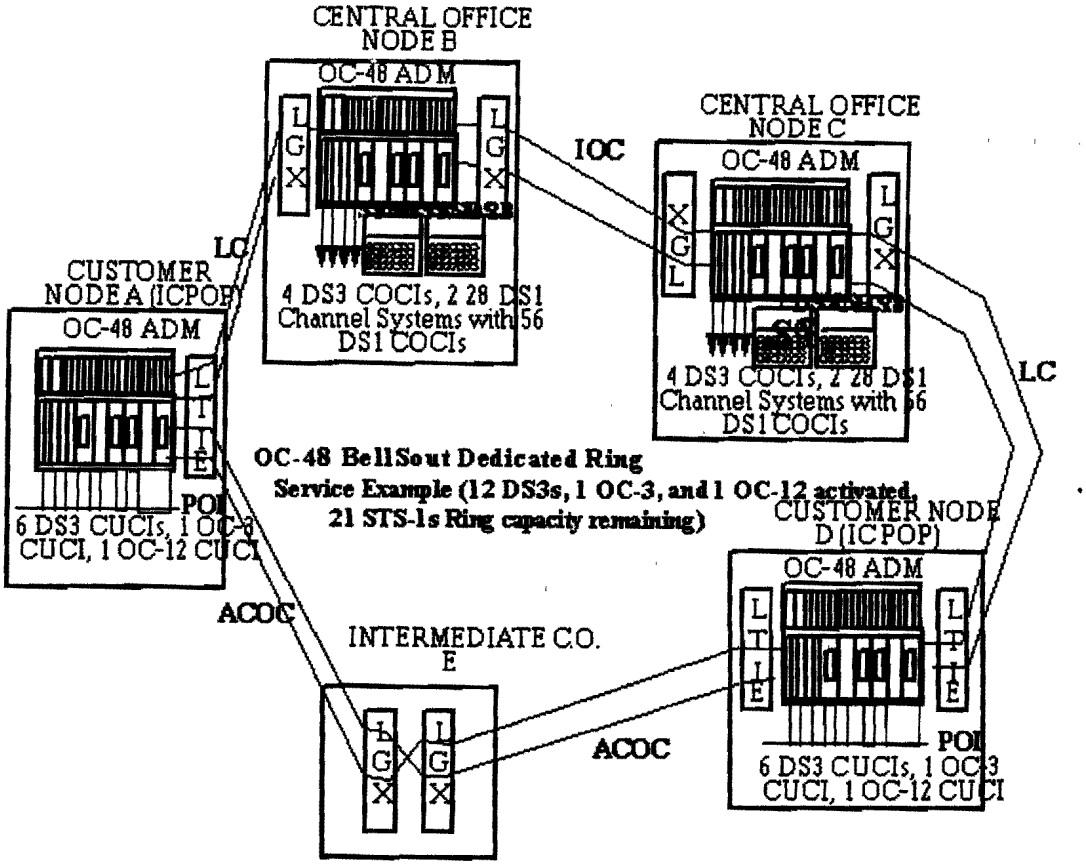

Example: BellSouth Dedicated Ring OC-48 capacity.

For this example the following rate elements are applicable:

- 2 Customer Nodes
- 2 Central Office Nodes
- 2 Local Channels
- 2 Alternate Central Office Channels
- 1 Interoffice Channel
- 12 DS3 Customer Channel Interfaces
- 8 DS3 Central Office Channel Interfaces
- 4 28 DS1 Channel Systems (DS3)
- 112 DS1 Central Office Channel Interfaces
- 2 OC-3 Customer Channel Interfaces
- 2 OC-12 Customer Channel Interfaces

E6. BELLSOUTH SWA SERVICE

E6.1 General (Cont'd)

E6.1.3 Rate Categories (Cont'd)

A. BellSouth SWA Transport (Cont'd)

10. BellSouth Dedicated Ring (Cont'd) (T)

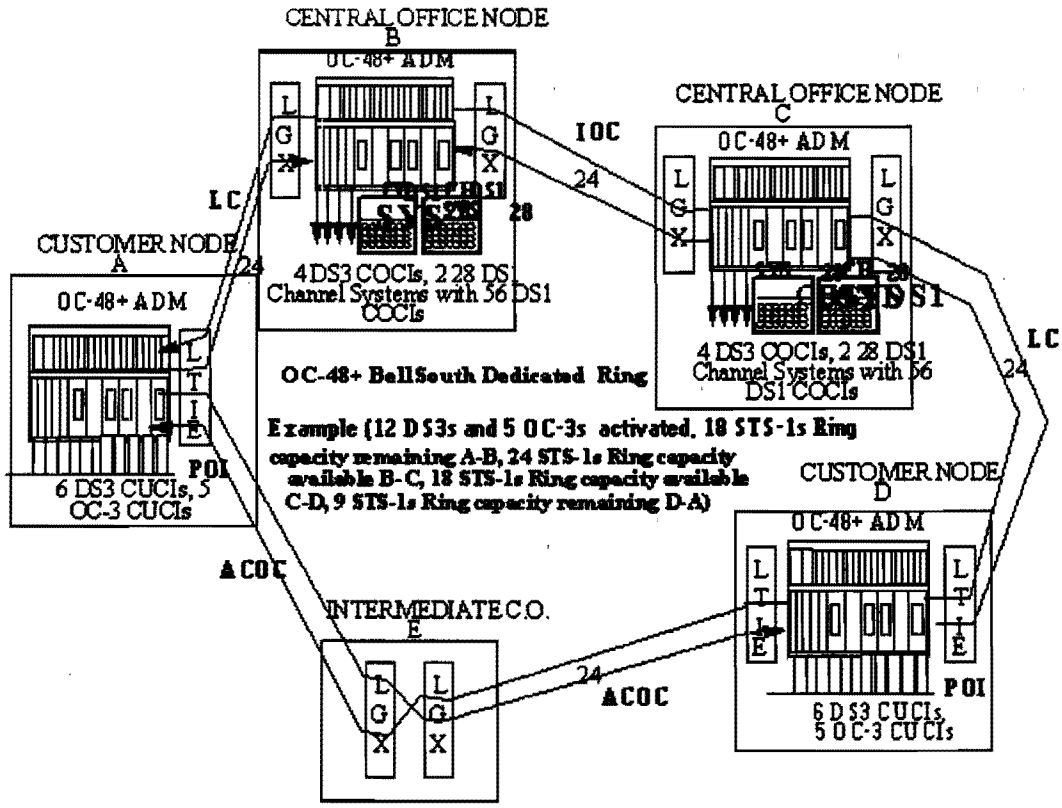

Example: BellSouth Dedicated Ring OC-48+ capacity

For this example the following rate elements are applicable:

- 2 Customer Nodes
- 2 Central Office Nodes
- 2 Local Channels
- 2 Alternate Central Office Channels
- 1 Interoffice Channel
- 12 DS3 Customer Channel Interfaces
- 8 DS3 Central Office Channel Interfaces
- 4 28 DS1 Channel Systems (DS3)
- 112 DS1 Central Office Channel Interfaces
- 10 OC-3 Customer Channel Interfaces

E6. BELLSOUTH SWA SERVICE

E6.1 General (Cont'd)

E6.1.3 Rate Categories (Cont'd)

A. BellSouth SWA Transport (Cont'd)

11. Channels for use with BellSouth Managed Shared Ring (T)

a. BellSouth Managed Shared Ring provides a flat rate transport link between a customer designated premises where the network is accessed and a serving wire center in the same BellSouth SWA BellSouth Managed Shared Ring area. The service component is either an Off-Net component for BellSouth SWA DS1 or an Off-Net component for BellSouth SWA DS3 service.

b. An Off-Net BellSouth SWA DS1 or an Off-Net BellSouth SWA DS3 is one that is aggregated into BellSouth Managed Shared Ring service at a serving wire center in the BellSouth Managed Shared Ring area.

12. Channels for use with BellSouth SWA Managed Shared Network Service (N)

a. Bellsouth SWA Managed Shared Network Service is a service under which the customer assigns to the Telephone Company the responsibility for facility design and engineering and routing of BellSouth SWA DS1 and DS0-level dedicated transport for switched access services from serving wire centers in a LATA to the customer's Aggregation Location(s) in the same LATA. (N)

b. Applicable rate elements for this service are: (N)

- The BellSouth SWA Managed Shared Network Service local channel charges apply for the DS3 local channels utilized to deliver BellSouth SWA Managed Shared Network Service traffic to the customer, either at an Aggregation Location or at an associated Alternate Aggregation Location. The specific BellSouth SWA Managed Shared Network Service DS3 local channel charge which applies is dependent upon the total quantity of DS3 local channels utilized to carry BellSouth SWA Managed Shared Network Service traffic and BellSouth SPA Managed Shared Network Service traffic, which is associated with a given Aggregation Location, on a per Aggregation Location basis. (N)

- BellSouth SWA Managed Shared Network Service DS1 or DS0 interface and interoffice charges apply based upon the level of the service (i.e., DS1 or DS0) collected at an Origination Location. The DS1 Interface may be either a DS1 Interface associated with nonchannelized DS1 service or it may be a DS1 Message Trunk Interface when the DS1 is used to provide message trunk terminations. The DS0 Interface may be either for a DS0 line side connection or for a DS0 trunk side connection. Interface charges apply at the Aggregation Location's serving wire center. Mileage for BellSouth SWA Managed Shared Network Service interoffice channels is measured from the Origination Location to the serving wire center of the traffic's associated Aggregation Location. For BellSouth SWA Managed Shared Network Service interoffice channels, which terminate in different zones, the highest zone rate will apply (i.e., Zone 1 is the lowest and Zone 3 is the highest). (N)

E6. BELLSOUTH SWA SERVICE

E6.1 General (Cont'd)

E6.1.3 Rate Categories (Cont'd)

B. Local Switching

The Local Switching rate categories provide for (1) the local end office switching (i.e., the common switching functions associated with the various BellSouth SWA service arrangements), (2) the termination of BellSouth SWA Transport at end offices, (3) the termination of common lines and BellSouth SWA WATS Service at end offices and (4) intercept functions (i.e., the termination of certain calls at a Company intercept operator or recording). This category includes usage sensitive rates and both chargeable and nonchargeable optional features, and basic service elements.

Various Common Switching, Transport Termination and BellSouth SWA WATS Service Termination optional features and BSEs are available and are described in E6.3 following.

1. The Local Switching rate element provides for the use of end office switching equipment. Usage sensitive rates are applied on a per minute of use basis. It is divided into four categories:
   a. LS1 provides local switching functions for BellSouth SWA FGA and BellSouth SWA FGB.
   b. LS2 provides local switching functions for BellSouth SWA FGC, BellSouth SWA FGD, BellSouth SWA 500, BellSouth SWA 8XX Toll Free Dialing Ten Digit Screening Service and BellSouth SWA 900 service.
   c. LS3 provides local switching functions for BellSouth SWA LSBSA and BellSouth SWA TSBSA 1.
   d. LS4 provides local switching functions for BellSouth SWA TSBSA 2 and BellSouth SWA TSBSA 3, BellSouth SWA 500, BellSouth SWA 8XX Toll Free Dialing Ten Digit Screening Service and BellSouth SWA 900 service.

   The application of these rates is set forth in E6.8.2.A following.
2. The Common Trunk Port service provides for termination of BellSouth SWA Common Transport trunk facilities at end office switches. The charge applies per MOU per trunk termination at end offices including host and remote end office switches. The charge also applies at the BellSouth SWA FGA and BellSouth SWA LSBSA dial tone offices and terminating offices in those cases where terminating BellSouth SWA FGA and BellSouth SWA LSBSA traffic terminates at an office other than the BellSouth SWA FGA or BellSouth SWA LSBSA dial tone office. The application of these rates is as set forth in E6.8.2 following. (N)

C. Dedicated End Office Trunk Port Service (N)

The Dedicated End Office Trunk Port Service provides for termination of dedicated transport trunk facilities at the end office switch. This service is required with dedicated transport to an end office and is available on a dedicated DS0/VG trunk port basis and on a dedicated DS1 trunk port basis. These elements apply per each dedicated DS0/VG and each DS1 transport facility terminated at an end office. Rates are set forth in E6.8.2 following. (N)

D. BellSouth SWA WATS Service (T)

1. Description
   a. The BellSouth SWA WATS Service rate category provides a connection between an end user premises (which for purposes of this Tariff include Centrex CO switches) and a Company switching office capable of performing the necessary screening functions for BellSouth SWA 8XX Toll Free Dialing Ten Digit Screening Service, BellSouth SWA WATS Service or similar services.
   b. BellSouth SWA WATS Service is arranged for either originating calling only or terminating calling only. It is provided with rotary dial or dual tone multifrequency address signaling and either loop start or ground start supervisory signaling (i.e., facility interfaces). The choice of the type of signaling is at the option of the IC.
   c. Service is provided as either effective two-wire or effective four-wire transmission paths. Each transmission path is provided with Standard Transmission Specifications and Data Transmission Parameters as set forth in E6.4 following.

(M)

Material previously appearing on this page now appears on page(s) 26 of this section.

E6. BELLSOUTH SWA SERVICE

E6.1 General (Cont'd)

E6.1.3 Rate Categories (Cont'd)

D. BellSouth SWA WATS Service (Cont'd)

2. Applications

a. BellSouth SWA WATS Service is provided only for use with BellSouth SWA FGC, BellSouth SWA FGD, BellSouth SWA TSBSA 2 or BellSouth SWA TSBSA 3 service. It is for use at the closed end of an BellSouth SWA 8XX Toll Free Dialing Ten Digit Screening Service or a BellSouth SWA WATS Service or similar type service.

3. Optional Features

a. At the option of the IC, the BellSouth SWA WATS Service may be ordered with the Improved Two-Wire Voice Transmission Specifications optional feature (guaranteed specifications are set forth in E6.4.3 following). Certain other features which may be provided in connection with BellSouth SWA WATS Service are available under the Company's local and/or general exchange service tariffs. Examples are:

- End User access to a Company test line
- Speed Calling

E. BellSouth CCS7 Access Arrangement (N)

1. Service Description

BellSouth CCS7 Access Arrangement allows for customer interconnection to the Company at designated Signal Transfer Points (STP) for use with services that require receiving and terminating signaling information using the common channel signaling protocol. CCS7 Access is provided for use with the BellSouth SWA CCSAC option, and described in A.9.e. preceding. For each connection, the customer must order a CCS7 Access Connection and CCS7 Access Termination. The CCS7 Access Arrangement is provided as follows. (N)

a. The CCS7 Signaling Connection provides a 2-way digital 56 kbps facility, dedicated to a single customer, which originates at the customer's signaling point of interconnection in a LATA and terminates at a Company Signal Transfer Point (STP) selected by the Company. (N)

b. The CCS7 Signaling termination provides a dedicated point of interface at a Company STP for customer's CCS7 Signaling Connection. (N)

The customer is responsible for reporting to the Company the Percent Interstate Usage (PIU) for BellSouth CCS7 Access Arrangement as set forth in E2.3.14 of this Tariff. (N)

A customer will be able to obtain access from each of its Signaling Point Of Interconnection (SPOI) to the Company CCS7 network in one or more LATAs designated by the customer. This arrangement is available for use with Company Feature Group D, TSBSA 1 switched access service and queries to Company databases pursuant to this tariff. (N)

For ordering proposed, CCS7 Signaling Connections and Terminations are ordered from the customer's SPOI to one or more Facility Switching Point Of Interconnection (FSPOI) locations in the LATA. The customer must order a minimum of two CCS7 Signaling Connections and two CCS7 Signaling Terminations, if the customer's SPOI connects to a customer SSP and a minimum of four CCS7 Signaling Connections and four CCS7 Signaling Terminations, if the customer's SPOI connects to a customer STP. FSPOI locations are set forth in the NECA Tariff FCC No. 4. (N)

2. BellSouth CCS7 Access Arrangement Usage

BellSouth SWA CCS7 Access Arrangement Usage provides for the use of the Company's CCS7 Access Arrangement network for the transmission of call set-up and non-call set-up traffic. The two types of usage available are as follows: (N)

a. Integrated Switched Digital Network User Part (ISUP) messages, which are used to provide the signaling set-up, supervise and release calls. ISUP usage charges will be assessed per signaling messages delivered to or from the customer, regardless of direction, through its dedicated CCS7 port connection. Specific types of ISUP messages are: (N)

ACM - Address Complete Message (N)

ANM - Answer Message (N)

CPG - Call Progress (N)

FOT - Forward Transfer Message (N)

E6. BELLSOUTH SWA SERVICE

E6.1 General (Cont'd)

E6.1.3 Rate Categories (Cont'd)

E. BellSouth CCS7 Access Arrangement (Cont'd) (N)

2. BellSouth CCS7 Access Arrangement Usage (Cont'd)

a. (Cont'd) (N)

IAM - Initial Address Message (N)

PAM - Pass Along Message (N)

REL - Release (N)

RES - Resume (N)

RLC - Release Complete Message (N)

SUS - Suspend (N)

b. Transaction Capabilities Application Part (TCAP) signaling messages are used to provide information to route calls to the appropriate service provider not related to a voice call. TCAP usage charges will be assessed per signaling message delivered to the customer, regardless of direction, for such services as Toll Free Access Service, 500 Access Service, TCAP Message Transmission, Line Information Database (LIDB) service, Enhanced Originating Line Screening (EOLS) service and LNP Query. Specific types of TCAP Messages are: (N)

ABT - Abort (N)

CON - Conversion Without Permission Message (N)

CWP - Conversion With Permission Message (N)

QUE - Query Without Permission Message (N)

QWP - Query With Permission Message (N)

RSP - Response Message (N)

UNI - Unidirectional (N)

F. BellSouth SWA 500 Service

The BellSouth SWA 500 service rate category includes the use of switch based translations and the use of transmission facilities and functions between a Service Switching Point (SSP) equipped switch and a Service Control Point (SCP) by the Company to provide for BellSouth SWA 500 service. Rate elements and rates associated with this category are provided in E6.8.13 following.

G. 800 Database

The 800 Database rate category includes the use of transmission facilities and functions between a Service Switching Point (SSP) equipped end office or access tandem and a Service Control Point (SCP) by the Company to provide for BellSouth SWA 8XX Toll Free Dialing Ten Digit Screening Service. Rate elements and rates associated with this category are provided in E6.8.4 following.

E6.1.4 Special Facilities Routing

An IC may request that the facilities used to provide BellSouth SWA service be specially routed. The regulations, rates and charges for Special Facilities Routing (i.e., Avoidance, Diversity and Cable Only) are set forth in Section E11. following.

E6.1.5 Design Layout Report

A. At the request of the IC, the Company will provide to the IC the makeup of the facilities and services provided from the IC's terminal location to the first point of switching. This information will be provided in the form of a Design Layout Report. The Design Layout Report will be provided to the IC at no charge, and will be reissued or updated whenever these facilities are materially changed.

E6.1.6 Acceptance Testing

A. When analog or a combination of analog and digital services are provided at voice grade frequency, the Company will, at the IC's request, cooperatively test to the point of termination at no additional charge, the following parameters at the time of installation: loss, C-notched noise, C-message noise, 3-tone slope, d.c. continuity and operational signaling. When the BellSouth SWA Transport is provided with Interface Groups 2, 6 or 9 and the BellSouth SWA Transport Termination is two-wire (i.e., there is a four-wire to two-wire conversion in BellSouth SWA Transport), balance parameters (equal level echo path loss) may also be tested.

B. When the service is provided totally via digital facilities (i.e., digital switch and digital transport), the Company will, at the IC's request, cooperatively test at the time of installation the following at no additional charge: operational signaling for each circuit provided and loss for one circuit per di-group provided.

E6. BELLSOUTH SWA SERVICE (T)

E6.1 General (Cont'd)

E6.1.6 Acceptance Testing (Cont'd)

C. When ***BellSouth SWA FGD*** or ***BellSouth SWA TSBSA*** 3 with the ***BellSouth SWA*** CCSAC option is ordered, network compatibility and other operational tests will be performed cooperatively by the Company and the IC. These tests are as specified in the BellSouth Guidelines to Technical Publication TR-TSV-000905. (T)

D. For ***BellSouth SWA*** FGD or ***BellSouth SWA TSBSA*** 3 trunks equipped with the 64 Clear Channel Capbility (64 CCC) option, tests will be performed to verify the integrity of the 64 Kbps service. 64 Kbps service testing, for ICs with 108 test line capability, will be made to the ICs 108 test line. For ICs without 108 test line capability, tests will be made to the demarcation point at the POP (Point of Presence). One trunk per DS1 facility will be tested. (T)

E6.1.7 Ordering Options and Conditions

The Access Order, as set forth in Section E5. preceding, is used in the provisioning of ***BellSouth SWA service***. Also included in that section are other charges which may be associated with ordering ***BellSouth SWA*** service (e.g., Service Date Change Charges, Cancellation Charges, etc.). (T)

For purposes of this Section, services requested on multiple Access Service Requests (ASRs) placed with the Company on a given day, for multiple lines to the same end office or multiple trunks on a common trunk group with the same premises interface code, will be treated as one request when the ASRs are related together by the IC.

E6.2 Provision and Description of BellSouth SWA Service Arrangements (T)

BellSouth SWA service is provided in four different ***BellSouth SWA FG*** arrangements and two ***BellSouth SWA*** Basic Serving Arrangements. The provision of each of these service categories requires the applicable switched ***BellSouth SWA*** Transport component and the appropriate Local Switching functions. There are also various ***BellSouth SWA*** Transport components and Local Switching optional features available with the ***BellSouth SWA FGs*** and ***BellSouth SWA Basic Serving Arrangements***. There are also various common switching BSEs available with the ***BellSouth SWA Baisc Serving Arrangements***. The ***BellSouth SWA*** Transport, Common Switching and Transport Termination optional features as well as common switching BSEs are available at all Company end office switches, unless stated otherwise. In addition, ***BellSouth SWA WATS Service*** may be provided, at the option of the IC, with ***BellSouth SWA FGC***, ***BellSouth SWA FGD***, and ***BellSouth SWA TSBSA*** 2 and ***BellSouth SWA TSBSA*** 3. ***BellSouth SWA WATS Service*** optional features are available in end offices designated as ***BellSouth SWA*** WATS ***Service*** serving offices. (T)

There are three specific transmission specifications (i.e., Types A, B and C) that have been identified for the provision of these service categories. The specifications provided are dependent on the Interface Group ordered. The parameters for the transmission specifications are set forth in E6.4.1 following.

BellSouth SWA FGs and ***BellSouth SWA Basic Serving Arrangments*** are arranged for either originating, terminating or two-way calling, based on the IC end office switching capacity ordered. Originating calling permits the delivery of calls from telephone exchange service locations to the IC's terminal location. Terminating calling permits the delivery of calls from the IC's terminal location to telephone exchange service locations. Two-way calling permits the delivery of calls in both directions, but not simultaneously. The Company will determine the type of calling to be provided unless the IC requests that a different type of directional calling is to be provided. In such cases, the Company will work cooperatively with the IC to determine the directionality. (T)

E6. BELLSOUTH SWA SERVICE (T)

E6.2 Provision and Description of BellSouth SWA Service Arrangements (Cont'd) (T)

Following are detailed descriptions of each of the available service categories. Each service category is described in terms of its specific physical characteristics and calling patterns, the transmission specifications with which it is provided, the optional features and BSE's available for use with it and the standard testing capabilities.

E6.2.1 BellSouth SWA FGA (T)

A. Description

1. ***BellSouth SWA*** FGA is provided in connection with Company electronic and electromechanical end offices. At the option of the IC, ***BellSouth SWA*** FGA is provided on a single or multiple line group basis and is arranged for originating calling only, terminating calling only, or two-way calling. (T)

2. ***BellSouth SWA*** FGA provides a line side termination at the first point of switching. The line side termination will be provided with either ground start supervisory signaling or loop start supervisory signaling. The type of signaling is at the option of the IC. (T)

3. The Company shall select the first point of switching, within the selected LATA, at which the line side termination is to be provided unless the IC requests a different first point of switching and Company facilities and measurement capabilities are available to accommodate such a request.

4. A seven digit local telephone number assigned by the Company is provided for access to ***BellSouth SWA*** FGA switching in the originating direction. The seven digit local telephone number will be associated with the selected end office switch and is of the form NXX-XXXX. (T)

   If the IC requests a specific seven digit telephone number that is not currently assigned, and the Company can, with reasonable effort, comply with that request, the requested number will be assigned to the IC.

5. ***BellSouth SWA*** FGA switching, when used in the terminating direction is arranged with dial tone start-dial signaling. When used in the terminating direction ***BellSouth SWA*** FGA switching may, at the option of the IC, be arranged for dial pulse or dual tone multifrequency address signaling, subject to availability of equipment at the first point of switching. When ***BellSouth SWA*** FGA switching is provided in a hunt group or uniform call distribution arrangement, all ***BellSouth SWA*** FGA switching will be arranged for the same type of address signaling. (T)

6. No address signaling is provided by the Company when ***BellSouth SWA*** FGA switching is used in the originating direction. Address signaling in such cases, if required by the IC, must be provided by the IC's customer using inband tone signaling techniques. Such inband tone address signals will not be regenerated by the Company and will be subject to the ordinary transmission capabilities of the ***BellSouth SWA*** Transport provided. (T)

E6. BELLSOUTH SWA SERVICE (T)

E6.2 Provision and Description of BellSouth SWA Service Arrangements (Cont'd) (T)

E6.2.1 BellSouth SWA FGA (Cont'd) (T)

A. Description (Cont'd)

7. ***BellSouth SWA*** FGA switching, when used in the terminating direction, may be used to access valid NXXs in the LATA, local operator service (0- and 0+), Directory Assistance (411 where available and 555-1212), emergency reporting service (911 where available), exchange telephone repair (611 where available), time or weather announcement services of the Company, community information services of an information service provider, and other IC's services (by dialing the appropriate digits). Charges for ***BellSouth SWA*** FGA terminating calls requiring operator assistance on calls to 611 or 911 will only apply where sufficient call details are available. Additional non-access charges will also be billed on a separate account for (1) an operator surcharge, as set forth in the local exchange tariffs, for local operator assistance (0- and 0+) calls; (2) calls to certain community information services, for which rates are applicable under Company General Subscriber Service tariffs; and (3) calls from a ***BellSouth SWA FGA*** line to another IC's service in accordance with that IC's applicable service rates when the Company performs the billing function for that IC. For ***BellSouth SWA*** FGA calls to Directory Assistance (411 where available and 555-1212), Switched Access ***BellSouth SWA*** service terminating usage rates will not apply. Instead, ***BellSouth SWA*** FGA calls to this service are subject to the ***BellSouth*** Directory Assistance Access service rates as set forth in E9.5 following. (T)

8. When a ***BellSouth SWA*** FGA switching arrangement for an individual IC (a single line or entire hunt group) is discontinued at an end office, an intercept announcement is provided. This arrangement provides, for a limited period of time, an announcement that the service associated with the number dialed has been disconnected. (T)

B. Optional Features

1. Common Switching Optional Features
   a. Hunt Group Arrangement
   b. Uniform Call Distribution Arrangement
   c. Nonhunting Number for use with Hunt Group Arrangement or Uniform Call Distribution Arrangement
   d. Call Denial
   e. Service Code Denial
   f. Enhanced Call Denial
   g. Call Screening

2. ***BellSouth SWA*** Transport Termination Optional Features (T)
   a. Two-way operation with dial pulse address signaling and loop start supervisory signaling
   b. Two-way operation with dial pulse address signaling and ground start supervisory signaling
   c. Two-way operation with dual tone multifrequency address signaling and loop start supervisory signaling
   d. Two-way operation with dual tone multifrequency address signaling and ground start supervisory signaling
   e. Terminating operation with dial pulse address signaling and loop start supervisory signaling
   f. Terminating operation with dial pulse address signaling and ground start supervisory signaling

E6. BELLSOUTH SWA SERVICE (T)

E6.2 Provision and Description of BellSouth SWA Service Arrangements (Cont'd) (T)

E6.2.1 BellSouth SWA FGA (Cont'd) (T)

B. Optional Features (Cont'd)

2. ***BellSouth SWA*** Transport Termination Optional Features (Cont'd) (T)
   - g. Terminating operation with dual tone multifrequency address signaling and loop start supervisory signaling
   - h. Terminating operation with dual tone multifrequency address signaling and ground start supervisory signaling
   - i. Originating operation with loop start supervisory signaling
   - j. Originating operation with ground start supervisory signaling
3. ***BellSouth SWA*** Transport Optional Features (T)
   - a. Supervisory Signaling (as set forth in E6.1.3 preceding)
   - b. IC Specified Entry Switch Receive Level
4. Certain other features which may be available in connection with ***BellSouth SWA FGA*** are provided under the Company's General Subscriber Service Tariffs. Examples are: (T)
   - a. Custom Calling Features
   - b. Extensions in the same local exchange as the dial tone office

C. Transmission Specifications

BellSouth SWA FGA is provided with either Type B or Type C Transmission Specifications. The specifications for the associated parameters are guaranteed to the first point of switching. Type C Transmission Specifications are provided with Interface Group 1 and Type B are provided with Interface Groups 2, 6 and/or 9. Type DB Data Transmission Parameters are provided with ***BellSouth SWA*** FGA to the first point of switching. (T)

D. Testing Capabilities

BellSouth SWA FGA is provided, in the terminating direction where equipment is available, with seven digit access to balance (100 type) test line and milliwatt (102 type) test line. In addition to the tests described in E6.1.6 preceding which are included with the installation of service, Additional Cooperative Acceptance Testing and NonScheduled Testing are available for ***BellSouth SWA*** FGA as set forth in Section E13. following. (T)

E6.2.2 BellSouth SWA FGB (T)

A. Description

1. ***BellSouth SWA*** FGB, when directly routed to an end office is provided at appropriately equipped Company electronic end office switches. When provided via Company designated electronic access tandem switches, ***BellSouth SWA*** FGB switching is provided at Company electronic and electromechanical end office switches. (T)
2. ***BellSouth SWA*** FGB is provided as trunk side switching through the use of end office or access tandem switch trunk equipment. The switch trunk equipment is provided with wink start start-pulsing signals and answer and disconnect supervisory signaling. (T)

E6. BELLSOUTH SWA SERVICE

E6.2 Provision and Description of BellSouth SWA Service Arrangements (Cont'd)

E6.2.2 BellSouth SWA FGB (Cont'd)

A. Description (Cont'd)

3. BellSouth SWA FGB switching is provided with multifrequency address signaling in both the originating and terminating directions. Except for BellSouth SWA FGB switching provided with the automatic number identification (ANI) or rotary dial station signaling arrangements as set forth in E6.3 following, any other address signaling in the originating direction, if required by the IC, must be provided by the IC's customer using inband tone signaling techniques. Such inband tone address signals will not be regenerated by the Company and will be subject to the ordinary transmission capabilities of the BellSouth SWA Transport provided. BellSouth SWA FGB switching provided with Automatic Number Identification (ANI) arrangements, provisioned to an End User(s) where facilities permit, must be for the End User(s) own use and cannot be resold, pursuant to Florida Public Service Commission Docket No. 900823-TL Order No. PSC-92-1081-FOF-TL, issued September 30, 1992.

4. The access code for BellSouth SWA FGB switching is a uniform access code. The form of the uniform access code is 950-0XXX or 950-1XXX for ICs and/or End Users. These uniform access codes will be the assigned access numbers of all BellSouth SWA FGB service provided to the IC and/or End User by the Company.

5. BellSouth SWA FGB switching, when used in the terminating direction, may be used to access valid NXXs in the LATA, time or weather announcement services of the Company, community information services of an information service provider and other IC's services (by dialing the appropriate digits). When directly routed to an end office, only those valid NXX codes served by that end office may be accessed. When routed through an access tandem, only those valid NXX codes served by end offices subtending the access tandem may be accessed. The IC and/or End User will also be billed additional non-access charges for calls to certain community information services for which rates are applicable under Company exchange service tariffs. Additionally, non-access charges will also be billed for calls from a BellSouth SWA FGB trunk to another IC's service in accordance with that IC's applicable service rates when the Company performs the billing function for that IC. Calls in the terminating direction will not be provided to 950-0XXX or 950-1XXX access codes, local operator assistance (0- and 0+), Directory Assistance (411 where available and 555-1212), service codes (611 and 911 where available) or 101XXXX access codes. BellSouth SWA FGB may not be switched, in the terminating direction, to BellSouth SWA FGB, BellSouth SWA FGC, BellSouth SWA FGD, or BellSouth SWA TSBSA.

6. The Company will establish a trunk group or groups for the IC at end office switches or access tandem switches where BellSouth SWA FGB switching is provided. When required by technical limitations, a separate trunk group will be established for each type of BellSouth SWA FGB switching arrangement provided. Different types of BellSouth SWA FGB or other switching arrangements may be combined in a single trunk group at the option of the Company.

7. When all BellSouth SWA FGB switching arrangements are discontinued at an end office and/or in a LATA, an intercept announcement is provided. This arrangement provides, for a limited period of time, an announcement that the service associated with the number dialed has been disconnected.

8. For BellSouth SWA FGB service to a Mobile Telephone Switching Office (MTSO) directly interconnected to a Company Access Tandem Office, the IC will be billed for the Switched Local Channel and ***dedicated*** transport measured as set forth in ***E6.7.19*** following, at premium rates only, including the Access Tandem Switching charge and the Interconnection charge. Carrier Common Line and Local Switching charges will not apply. (C)

E6. BELLSOUTH SWA SERVICE (T)

E6.2 Provision and Description of BellSouth SWA Service Arrangements (Cont'd) (T)

E6.2.2 BellSouth SWA FGB (Cont'd) (T)

A. Description (Cont'd)

9. ***BellSouth SWA*** FGB is provided with ***BellSouth*** Directory Assistance Access service via Company designated electronic access tandem switches appropriately equipped for Directory Assistance measurement. Completion of these calls is as set forth in 5. preceding. When ***BellSouth*** Directory Assistance Access service is provided with ***BellSouth SWA*** FGB switching, calls routed to the access tandem will be completed to the Directory Assistance location. Calls completed to the Directory Assistance location are subject to the charges set forth in E9.5 following. (T)

B. Optional Features

1. Common Switching Optional Features
   a. Automatic Number Identification (ANI)
   b. Up to 7 Digit Outpulsing of Access Digits to IC
   c. Alternate Traffic Routing
2. ***BellSouth SWA*** Transport Termination Optional Features (T)
   a. Rotary Dial Station Signaling
3. ***BellSouth SWA*** Transport Optional Features (T)
   a. IC Specified Entry Switch Receive Level
   b. IC Specification of Switched Transport Termination
   c. Supervisory Signaling (as set forth in E6.1.3)

C. Transmission Specifications

BellSouth SWA FGB is provided with either Type B or Type C Transmission Specifications. The specifications for the associated parameters are guaranteed to the end office when routed directly or to the first point of switching when routed via an access tandem. Type C Transmission Specifications are provided with Interface Group 1 and Type B is provided with Interface Groups 2, 6 and/or 9. Type DB Data Transmission Parameters are provided with ***BellSouth SWA*** FGB to the first point of switching. (T)

D. Testing Capabilities

BellSouth SWA FGB is provided, in the terminating direction where equipment is available, with seven digit access to balance (100 type) test line, milliwatt (102 type) test line, nonsynchronous or synchronous test line, automatic transmission measuring (105 type) test line, data transmission (107 type) test line, loop around test line, short circuit test line and open circuit test line. In addition to the tests described in E6.1.6 preceding which are included with the installation of service, Additional Cooperative Acceptance Testing, Automatic Scheduled Testing, Cooperative Scheduled Testing, Manual Scheduled Testing and Non-Scheduled Testing are available as set forth in Section E13. following. (T)

(M)

Material previously appearing on this page now appears on page(s) 33 of this section.

E6. BELLSOUTH SWA SERVICE

E6.2 Provision and Description of BellSouth SWA Service Arrangements (Cont'd)

E6.2.3 BellSouth SWA FGC

A. Description

1. BellSouth SWA FGC is provided at all Company end office switches on a direct trunk basis or via Company designated access tandem switches. BellSouth SWA FGC switching is provided to the IC (i.e., providers of MTS and WATS) at an end office switch unless BellSouth SWA FGD end office switching is provided in the same office. When BellSouth SWA FGD switching is available, BellSouth SWA FGC switching will not be provided.

2. BellSouth SWA FGC is provided as trunk side switching through the use of end office or access tandem switch trunk equipment. The switch trunk equipment is provided with answer and disconnect supervisory signaling. Wink start start-pulsing signals are provided in all offices where available. In those offices where wink start start-pulsing signals are not available, delay dial start-pulsing signals will be provided unless immediate dial pulse signaling is provided, in which case no start-pulsing signals are provided.

3. BellSouth SWA FGC is provided with multifrequency address signaling except in certain electromechanical end office switches where multifrequency signaling is not available. In such switches, the address signaling will be dial pulse, revertive pulse, immediate dial pulse or panel call indicator signaling, whichever is available. Up to 12 digits of the called party number dialed by the IC's customer using dual tone multifrequency or dial pulse address signals will be provided by Company equipment to the IC terminal location where the BellSouth SWA service terminates. Such called party number signals will be subject to the ordinary transmission capabilities of the BellSouth SWA Transport provided.

4. No access code is required for BellSouth SWA FGC switching. The telephone number dialed by the IC's customer shall be a 7 or 10 digit number for calls in the North American Numbering Plan (NANP). The form of the numbers dialed by the IC's customers is NXX-XXXX, 0 or 1 + NXX-XXXX, NPA + NXX-XXXX, 0 or 1 + NPA + NXX-XXXX.

5. BellSouth SWA FGC switching, when used in the terminating direction, may be used to access valid NXXs in the LATA, time or weather announcement services of the Company, community information services of an information provider, and other IC's services (by dialing the appropriate codes) when the services can be reached using valid NXX codes. When directly routed to an end office, only those valid NXX codes served by that office may be accessed. When routed through an access tandem, only those valid NXX codes served by offices subtending the access tandem may be accessed. Where measurement capabilities exist, the IC will also be billed additional non-access charges for calls to certain community information services, for which rates are applicable under the Company's General Subscriber Service Tariffs. Additionally, non-access charges will also be billed for calls from a BellSouth SWA FGC trunk to another IC's service in accordance with that IC's applicable service rates when the Company performs the billing function for that IC. Calls in the terminating direction will not be completed to 950-0XXX or 950-1XXX access codes, local operator assistance (0- and 0+), Directory Assistance (411 and 555-1212), service codes (611 and 911) and ***101XXXX*** access codes. BellSouth SWA FGC may not be switched, in the terminating direction, to BellSouth SWA FGB, BellSouth SWA FGC, BellSouth SWA FGD, or BellSouth SWA TSBSA. (C)

6. The Company will establish a trunk group or groups for the IC at end office switches or access tandem switches where BellSouth SWA FGC switching is provided. When required for technical limitations, a separate trunk group will be established for each type of BellSouth SWA FGC switching arrangement provided. Different types of BellSouth SWA FGC or other switching arrangements may be combined in a single group at the option of the Company.

E6. BELLSOUTH SWA SERVICE (T)

E6.2 Provision and Description of BellSouth SWA Service Arrangements (Cont'd) (T)

E6.2.3 BellSouth SWA FGC (Cont'd) (T)

A. Description (Cont'd)

7. A ***BellSouth SWA WATS Service*** line may, at the option of the IC, be provided for use with ***BellSouth SWA FGC***. A ***BellSouth SWA WATS Service line*** provides a connection between an IC's end user's premises and a Company end office switch capable of performing the necessary screening functions for ***BellSouth SWA 8XX Toll Free Dialing Ten Digit Screening*** Service, ***BellSouth SWA WATS Service*** or similar services and is provided only for use at the closed end of such services. (T)

   BellSouth SWA WATS Service lines are arranged for either originating calling only or terminating calling only. They are provided with rotary dial or dual tone multifrequency address signaling and either loop start or ground start supervisory signaling. The choice of the type of signaling is at the option of the IC. (T)

   BellSouth SWA WATS Service lines are provided as either an effective two-wire or effective four-wire transmission path. Each transmission path is provided with Standard Transmission Specifications and Data Transmission Parameters as set forth in E6.4.1.D. and E6.4.2.C. following. At the option of the IC, the ***BellSouth SWA WATS Service*** line may be ordered with the Improved Two-Wire Voice Transmission Specifications (guaranteed specifications are set forth in E6.4.3. following). (T)

B. Optional Features

1. Common Switching Optional Features
   a. Automatic Number Identification (ANI)
   b. Service Class Routing
   c. Dial Pulse Address Signaling
   d. Revertive Pulse Address Signaling
   e. Delay Dial Start-Pulsing Signaling
   f. Immediate Dial Pulse Address Signaling
   g. Alternate Traffic Routing
   h. Trunk Access Limitation
2. Common Switching Optional Features for use with ***BellSouth SWA WATS Service*** lines (T)
   a. End Office End User Line Service Screening for use with ***BellSouth SWA WATS*** Service (T)
   b. Hunt Group Arrangement for use with ***BellSouth SWA WATS*** Service (T)
   c. Uniform Call Distribution Arrangement for use with ***BellSouth SWA WATS*** Service (T)
   d. Nonhunting Number for use with Hunt Group Arrangement or Uniform Call Distribution Arrangement for use with ***BellSouth SWA WATS*** Service (T)
   e. Band Advance Arrangement for use with ***BellSouth SWA WATS*** Service (T)

E6. BELLSOUTH SWA SERVICE

E6.2 Provision and Description of BellSouth SWA Service Arrangements (Cont'd)

E6.2.3 BellSouth SWA FGC (Cont'd)

B. Optional Features (Cont'd)

3. BellSouth SWA Transport Termination Optional Features
   a. Operator Trunks - i.e., Coin, Non-Coin and Combined Coin and Non-Coin. (Non-Coin Trunks are provided at Company electronic and electromechanical end offices. Coin and Combined Coin and Non-Coin are provided only at Company electronic end offices and other Company end offices where equipment is available.)
4. BellSouth SWA Transport Optional Features
   a. Supervisory Signaling (as set forth in E6.1.3)
5. BellSouth SWA WATS Service Termination Optional Features
   a. E&M Supervisory Signaling

C. Transmission Specifications

1. BellSouth SWA FGC is provided with either Type B or Type C Transmission Specifications as follows:
   a. When routed directly to the end office either Type B or Type C is provided.
   b. When routed to an access tandem only Type B is provided.
   c. Type B or Type C is provided on the transmission path from the access tandem to the end office.
2. Type C Transmission Specifications are provided with Interface Group 1 when routed directly to an end office. Type B is provided with Interface Groups 2, 6 and/or 9, whether routed directly to an end office or to an access tandem.
3. Type DB Data Transmission Parameters are provided with BellSouth SWA FGC for the transmission path between the IC's terminal location and the end office when directly routed to the end office, and Type DB Data Transmission Parameters are provided for the transmission path between the IC's terminal location and the access tandem and between the access tandem and the end office when routed via an access tandem.

D. Testing Capabilities

BellSouth SWA FGC is provided, in the terminating direction where equipment is available with seven digit access to balance (100 type) test line, milliwatt (102 type) test line, nonsynchronous or synchronous test line, automatic transmission measuring (105 type) test line, data transmission (107 type) test line, loop around test line, short circuit test line and open circuit test line. In addition to the tests described in E6.1.6 preceding which are included with the installation of service, Additional Cooperative Acceptance Testing, Non-Optional Automatic Scheduled Testing, Cooperative Scheduled Testing or Manual Scheduled Testing and Non-Scheduled Testing are available as set forth in Section E13. following for BellSouth SWA FGC.

E6.2.4 BellSouth SWA FGD

A. Description

1. BellSouth SWA FGD is provided at Company designated electronic end office switches whether routed directly or via Company designated electronic access tandem switches. For BellSouth SWA FGD with BellSouth SWA CCSAC and the tandem signaling option, the BellSouth SWA CCSAC option is provided through Company-designated STPs. ***In addition, calls originated by an end user to information services, transportation information or Telecommunications Relay Service (TRS) via 211, 511 or 711 dialing codes shall be routed by the Company to the designated DMS access tandem within the LATA.*** (C)

E6. BELLSOUTH SWA SERVICE

E6.2 Provision and Description of BellSouth SWA Service Arrangements (Cont'd)

E6.2.4 BellSouth SWA FGD (Cont'd)

A. Description (Cont'd)

1. (Cont'd)

   For originating BellSouth SWA FGD for coin sent-paid capability, the coin capable option is provided directly to Company designated end offices or TOPS tandems.

2. BellSouth SWA FGD is provided as trunk side switching through the use of end office or access tandem switch trunk equipment. The switch trunk equipment is provided with wink start start-pulsing signals and answer and disconnect supervisory signaling, or without signaling when the BellSouth SWA CCSAC optional feature is specified.

3. BellSouth SWA FGD switching, except when used with the 950 dialing option, is provided with multifrequency address signaling, or common channel signaling. When used with the 950 dialing option, BellSouth SWA FGD is only available with common channel signaling. Up to 12 digits of the called party number dialed by the IC's customer using dual tone multifrequency or dial pulse address, or common channel (out-of-band), signals will be provided by Company equipment to the IC terminal location where the BellSouth SWA service terminates. Such address signals will be subject to the ordinary transmission capabilities of the BellSouth SWA Transport provided.

4. BellSouth SWA FGD switching, when used in the terminating direction, may be used to access valid NXXs in the LATA, time or weather announcement services of the Company, community information services of an information service provider and other IC's services (by dialing the appropriate codes) when such services can be reached using valid NXX codes. When directly routed to an end office, only those valid NXX codes served by that office may be accessed. When routed through an access tandem, only those valid NXX codes served by end offices subtending the access tandem may be accessed. The IC will also be billed additional non-access charges for calls to certain community information services, for which rates are applicable under the Company General Subscriber Service Tariffs.

   Additionally, non-access charges will also be billed for calls from a BellSouth SWA FGD trunk to another IC's service in accordance with that IC's applicable service rates when the Company performs the billing function for that IC.

   Calls in the terminating direction will not be completed to 950-0XXX or 950-1XXX access codes, local operator assistance (0- and 0+), Directory Assistance (411 or 555-1212) service codes 611 and 911 and 101XXXX access codes. BellSouth SWA FGD may not be switched, in the terminating direction, to BellSouth SWA service BellSouth SWA FGB, BellSouth SWA FGC, BellSouth SWA FGD or BellSouth SWA TSBSA.

5. The Company will establish a trunk group or groups for the IC at end office switches or access or TOPS tandem switches where BellSouth SWA FGD switching is provided and where technically feasible. When required by technical limitations, a separate trunk group will be established for each type of BellSouth SWA FGD switching arrangement provided. Different types of BellSouth SWA FGD or other switching arrangements may be combined in a single trunk group at the option of the Company.

6. The access code for BellSouth SWA FGD switching is a uniform access code of the form 101XXXX.

   These uniform access codes will be the assigned number of all BellSouth SWA FGD access provided to the IC by the Company. As an option, where technically feasible, BellSouth SWA FGD may be accessed by dialing an associated uniform 950-XXXX access code. (C)

E6. BELLSOUTH SWA SERVICE

E6.2 Provision and Description of BellSouth SWA Service Arrangements (Cont'd)

E6.2.4 BellSouth SWA FGD (Cont'd)

A. Description (Cont'd)

6. The access code for BellSouth SWA FGD switching is a uniform access code of the form 101XXXX. (Cont'd) (C)

No access code is required for calls to an IC over BellSouth SWA FGD service if the end user's telephone exchange service is arranged for presubscription to that IC as set forth in Section E13. following.

Where no access code is required, the number dialed by the IC's customer shall be a seven or ten digit number for calls in the North American Numbering Plan (NANP). The form of the numbers dialed by the IC's customers is NXX-XXXX, 0 or 1 + NXX-XXXX, NPA + NXX-XXXX, 0 or 1 + NPA + NXX-XXXX.

Where facilities permit, the IC's operator can be reached by dialing 00.

When the 101XXXX access code is used, BellSouth SWA FGD switching also provides for dialing the digit 0 for access to the IC's operator, 911 for access to the Company's emergency reporting service, or at the IC's option, the end-of-dialing digit (#) for cut-through access to the IC's terminal location. (C)

7. BellSouth SWA FGD Switching will be arranged to accept calls from telephone exchange service locations without the need for dialing a 101XXXX uniform access code. Each telephone exchange service line will be marked with a presubscription code to identify which 101XXXX code its calls will be directed to for interLATA and intraLATA service. Presubscription codes are applied as set forth in Section E13. following. (C)

8. A BellSouth SWA WATS Service line may, at the option of the IC, be provided for use with BellSouth SWA FGD service. A BellSouth SWA WATS Service line provides a connection between a IC's end user's premises and a Company end office switch capable of performing the necessary screening functions for 800 BellSouth SWA 8XX Toll Free Dialing Ten Digit Screening Service, BellSouth SWA WATS Service or similar services and is provided only for use at the closed end of such services. (T)

BellSouth SWA WATS Service lines are arranged for either originating calling only or terminating calling only. They are provided with rotary dial or dual tone multifrequency address signaling and either loop start or ground start supervisory signaling. The choice of the type of signaling is at the option of the IC.

BellSouth SWA WATS Service lines are provided as either an effective two-wire or effective four-wire transmission path. Each transmission path is provided with Standard Transmission Specifications and Data Transmission Parameters as set forth in E6.4.1.D and E6.4.2.C following. At the option of the IC, the WATS Access Line BellSouth SWA WATS Service may be ordered with the Improved Two-Wire Voice Transmission Specifications (guaranteed specifications are set forth in E6.4.3 following).

9. When an IC has had BellSouth SWA FGB in an end office and subsequently replaces the BellSouth SWA FGB with BellSouth SWA FGD, at the mutual agreement of the IC and the Company, the Company will, for 90 days, direct calls dialed by the IC's end users using the IC's previous BellSouth SWA FGB access code to the IC's BellSouth SWA FGD service. The IC must be prepared to handle normally dialed BellSouth SWA FGD calls as well as calls dialed with the BellSouth SWA FGB access code which require the IC to receive additional address signaling from the end user. Such calls will be rated as BellSouth SWA FGD. (T)

E6. BELLSOUTH SWA SERVICE

E6.2 Provision and Description of BellSouth SWA Service Arrangements (Cont'd)

E6.2.4 BellSouth SWA FGD (Cont'd)

A. Description (Cont'd)

10. Originating BellSouth SWA FGD service can be ordered for the completion of sent-paid coin calls. BellSouth SWA FGD with coin sent-paid capability is provided direct to designated Company end offices or via TOPS tandem switches.

11. For BellSouth SWA FGD service to a Mobile Telephone Switching Office (MTSO) directly interconnected to a Company Access Tandem Office, the IC will be billed for the Switched Local Channel and BellSouth SWA ***Dedicated*** Transport measured as set forth in E6.7.19 following, at premium rates only, including the Access Tandem Switching charge and the Interconnection charge. Carrier Common Line and Local Switching charges will not apply. (C)

12. For BellSouth SWA FGD service to Alternative Local Exchange Companies (ALECs), the IC will be billed for the Switched Local Channel and BellSouth SWA Transport measured as set forth in E6.7.19.H. following, at premium rates only, including the Access Tandem Switching charge and the Interconnection charge. Carrier Common Line and Local Switching charges will not apply. BellSouth SWA Common Transport mileage charges will be based on the Company's portion of total mileage.

B. Optional Features

1. Common Switching Optional Features
   a. Automatic Number Identification (ANI) /Charge Number (CN)
   b. Service Class Routing
   c. Alternate Traffic Routing
   d. Call Gapping Arrangement
   e. Trunk Access Limitation
   f. Switched ditigal 56 kbps (e.g., AccuPulse® service Switching Capability) services
   g. Cut-Through
   h. Calling Party Number (CPN)
   i. Carrier Selection Parameter (CSP)
   j. 950-XXXX Dialing Over BellSouth SWA FGD
2. Common Switching Optional Features For Use With BellSouth SWA WATS Service
   a. End Office End User Line Service Screening for use with BellSouth SWA WATS Service
   b. Hunt Group Arrangement for use with BellSouth SWA WATS Service
   c. Nonhunting Number for use with Hunt Group Arrangement or Uniform Call Distribution Arrangement for use with BellSouth SWA WATS Service
   d. Uniform Call Distribution Arrangement for use with BellSouth SWA WATS Service
   e. Band Advance Arrangement for use with BellSouth SWA WATS Service
   f. Access Transport Parameter
3. BellSouth SWA Transport Termination Optional Features
   a. Operator Trunk, Full Feature Arrangement
4. BellSouth SWA Transport Optional Features
   a. Supervisory Signaling (as set forth in E6.1.3)

®Registered Service Mark of BellSouth Corporation

E6. BELLSOUTH SWA SERVICE[1] (T)

E6.2 Provision and Description of BellSouth SWA Service Arrangements (Cont'd) (T)

E6.2.4 BellSouth SWA FGD (Cont'd) (T)

B. Optional Features (Cont'd)

4. ***BellSouth SWA*** Transport Optional Features (Cont'd) (T)
   b. Switched digital 56 kbps (e.g., AccuPulse® service Switching Capability) Services
   c. Coin sent-paid capability, as set forth in E6.1.3 of this Tariff
   d. Common Channel Signaling Access Capability
   e. 64 Clear Channel Capability (CCC) as set forth in E6.1.3
5. ***BellSouth SWA WATS Service*** Termination Optional Features (T)
   a. E & M Supervisory Signaling

C. Transmission Specifications

1. ***BellSouth SWA*** FGD is provided with either Type A, Type B or Type C Transmission Specifications as follows: (T)
   a. When routed directly to the end office either Type B or Type C is provided.
   b. When routed to an access or TOPS tandem, only Type A is provided.
   c. Type A is provided on the transmission path from the access or TOPS tandem to the end office.
2. Type C Transmission Specification are provided with Interface Group 1. Type A and B Transmission Performances are provided with Interface Group 2, 6, and/or 9.
3. Type DA Data Transmission Parameters are provided for the transmission path between the IC terminal location and the access or TOPS tandem and between the access or TOPS tandem and the end office, or with ***BellSouth SWA*** FGD, when equipped with tandem signaling, for the transmission path between the IC's premises and the end offices when directly routed to the end offices. Type DB Data Transmission Parameters are provided with ***BellSouth SWA*** FGD for the transmission path between the IC terminal location and the end office when directly routed to the end office. (T)
4. When equipped with tandem signaling, only Type A is provided.

D. Testing Capabilities

BellSouth SWA FGD is provided, in the terminating direction where equipment is available, with seven digit access to balance (100 type) test line, milliwatt (102 type) test line, nonsynchronous or synchronous test line, automatic transmission measuring (105 type) test line, data transmisson (107 type) test line, loop around test line, short circuit test line and open circuit test line. In addition to the tests described in E6.1.6 preceding which are included with the installation of service, Additional Cooperative Acceptance Testing, Automatic Scheduled Testing, Cooperative Scheduled Testing, Manual Scheduled Testing and Non-Scheduled Testing, are available for ***BellSouth SWA*** FGD as set forth in E13. following. (T)

E6.2.5 Reserved for Future Use

(M)

Material previously appearing on this page now appears on page(s) 40 of this section.
*Registered Service Mark of BellSouth Corporation

INTERCONNECTION AGREEMENT BETWEEN BELLSOUTH TELECOMMUNICATIONS INC. AND ICG TELECOM GROUP, INC.

FLORIDA PUBLIC SERVICE COMMISSION
DOCKET NO. 020919-TP EXHIBIT NO. 15
COMPANY/ WITNESS: Bell South/ICG Interconnect Agreement
DATE: 5-07-03

15

TABLE OF CONTENTS

General Terms and Conditions

Definitions
1. CLEC Certification
2. Term of the Agreement
3. Operational Support Systems
4. Parity
5. White Pages Listings
6. Court Ordered Requests for Call Detail Records and Other Subscriber Information
7. Liability and Indemnification
8. Intellectual Property Rights and Indemnification
9. Proprietary and Confidential Information
10. Resolution of Disputes
11. Taxes
12. Force Majeure
13. Adoption of Agreements
14. Modification of Agreement
15. Non-waiver of Legal Rights
16. Indivisibility
17. Waivers
18. Governing Law
19. Assignments
20. Notices
21. Rule of Construction
22. Headings of No Force or Effect
23. Multiple Counterparts
24. Filing of Agreement
25. Compliance with Applicable Law
26. Necessary Approvals
27. Good Faith Performance
28. Nonexclusive Dealings
29. Rate True-Up
30. Survival
31. Entire Agreement

TABLE OF CONTENTS (cont'd)

Attachment 1 - Resale

Attachment 2 - Network Elements and Other Services

Attachment 3 - Network Interconnection

Attachment 4 - Physical Collocation

Attachment 5 - Access to Numbers and Number Portability

Attachment 6 – Pre-Ordering, Ordering, Provisioning, Maintenance and Repair

Attachment 7 - Billing

Attachment 8 - Rights-of-Way, Conduits and Pole Attachments

Attachment 9 - Performance Measurements

Attachment 10- BellSouth Disaster Recovery Plan

Attachment 11–Bona Fide Request/New Business Request Process

AGREEMENT
GENERAL TERMS AND CONDITIONS

THIS AGREEMENT is made by and between BellSouth Telecommunications, Inc., ("BellSouth"), a Georgia corporation, and ICG Telecom Group, Inc. ("ICG"), a Colorado corporation, and shall be effective on the Effective Date, as defined herein. This Agreement may refer to either BellSouth or ICG or both as a "Party" or "Parties."

W I T N E S S E T H

WHEREAS, BellSouth is a local exchange telecommunications company authorized to provide telecommunications services in the states of Alabama, Florida, Georgia, Kentucky, Louisiana, Mississippi, North Carolina, South Carolina and Tennessee; and

WHEREAS, ICG is or seeks to become a CLEC authorized to provide telecommunications services in the states of Alabama, Florida, Georgia, Kentucky, Louisiana, Mississippi, North Carolina, South Carolina, and Tennessee; and

WHEREAS, ICG wishes to resell BellSouth's telecommunications services and purchase network elements and other services, and, solely in connection therewith, may wish to utilize collocation space as set forth in Attachment 4 of this Agreement); and

WHEREAS, the Parties wish to interconnect their facilities and exchange traffic pursuant to Sections 251 and 252 of the Act.

NOW THEREFORE, in consideration of the mutual agreements contained herein, BellSouth and ICG agree as follows:

Definitions

Affiliate is defined as a person that (directly or indirectly) owns or controls, is owned or controlled by, or is under common ownership or control with, another person. For purposes of this paragraph, the term "own" means to own an equity interest (or equivalent thereof) of more than 10 percent.

Commission is defined as the appropriate regulatory agency in each state of BellSouth's nine-state region (Alabama, Florida, Georgia, Kentucky, Louisiana, Mississippi, North Carolina, South Carolina, and Tennessee).

Competitive Local Exchange Carrier (CLEC) means a telephone company certificated by the Commission to provide local exchange service within BellSouth's franchised area.

Effective Date is defined as the date that the Agreement is effective for purposes of rates, terms and conditions and shall be thirty (30) days after the date of the last signature executing the Agreement. Future amendments for rate changes will also be effective thirty (30) days after the date of the last signature executing the amendment.

End User means the ultimate user of the Telecommunications Service.

FCC means the Federal Communications Commission.

General Terms and Conditions means this document including all of the terms, provisions and conditions set forth herein.

Telecommunications means the transmission, between or among points specified by the user, of information of the user's choosing, without change in the form or content of the information as sent and received.

Telecommunications Service means the offering of telecommunications for a fee directly to the public, or to such classes of users as to be effectively available directly to the public, regardless of the facilities used.

Telecommunications Act of 1996 ("Act") means Public Law 104-104 of the United States Congress effective February 8, 1996. The Act amended the Communications Act of 1934 (47 U.S.C. Section 1 et. seq.).

1. CLEC Certification

1.1 Prior to execution of this Agreement, ICG agrees to provide BellSouth in writing ICG's CLEC certification for all states covered by this Agreement except Kentucky prior to BellSouth filing this Agreement with the appropriate Commission for approval.

1.2 To the extent ICG is not certified as a CLEC in each state covered by this Agreement as of the execution hereof, ICG will notify BellSouth in writing and provide CLEC certification when it becomes certified to operate in any other state covered by this Agreement. Upon notification, BellSouth will file this Agreement with the appropriate Commission for approval.

2. Term of the Agreement

2.1 The term of this Agreement shall be three years, beginning on the Effective Date and shall apply to the BellSouth territory in the state(s) of Alabama, Florida, Georgia, Kentucky, Louisiana, Mississippi, North Carolina, South Carolina and Tennessee. Notwithstanding any prior agreement of the Parties, the rates, terms and conditions of this Agreement shall not be applied retroactively prior to the Effective Date.

fees) with respect thereto, which are incurred by the providing Party in connection with any claim for or contest of any such tax or fee.

11.4.7 Each Party shall notify the other Party in writing of any assessment, proposed assessment or other claim for any additional amount of such a tax or fee by a taxing authority; such notice to be provided, if possible, at least ten (10) days prior to the date by which a response, protest or other appeal must be filed, but in no event later than thirty (30) days after receipt of such assessment, proposed assessment or claim.

11.5 Mutual Cooperation. In any contest of a tax or fee by one Party, the other Party shall cooperate fully by providing records, testimony and such additional information or assistance as may reasonably be necessary to pursue the contest. Further, the other Party shall be reimbursed for any reasonable and necessary out-of-pocket copying and travel expenses incurred in assisting in such contest.

12. Force Majeure

In the event performance of this Agreement, or any obligation hereunder, is either directly or indirectly prevented, restricted, or interfered with by reason of fire, flood, earthquake or like acts of God, wars, revolution, civil commotion, explosion, acts of public enemy, embargo, acts of the government in its sovereign capacity, labor difficulties, including without limitation, strikes, slowdowns, picketing, or boycotts, unavailability of equipment from vendor, changes requested by ICG, or any other circumstances beyond the reasonable control and without the fault or negligence of the Party affected, the Party affected, upon giving prompt notice to the other Party, shall be excused from such performance on a day-to-day basis to the extent of such prevention, restriction, or interference (and the other Party shall likewise be excused from performance of its obligations on a day-to-day basis until the delay, restriction or interference has ceased); provided, however, that the Party so affected shall use diligent efforts to avoid or remove such causes of non-performance and both Parties shall proceed whenever such causes are removed or cease.

13. Adoption of Agreements

BellSouth shall make available, pursuant to 47 USC § 252 and the FCC rules and regulations regarding such availability, to ICG any interconnection, service, or network element provided under any other agreement filed and approved pursuant to 47 USC § 252, provided a minimum of six months remains on the term of such agreement. The Parties shall adopt all rates, terms and conditions concerning such other interconnection, service or network element and any other rates, terms and conditions that are legitimately related to or were negotiated in exchange for or in conjunction with the interconnection, service or network element being adopted. The adopted interconnection, service, or network element and agreement shall apply to the same states as such other agreement. The term of the adopted agreement or provisions shall expire on the same date as set forth in the agreement that was adopted.

IN WITNESS WHEREOF, the Parties have executed this Agreement the day and year written below.

BellSouth Telecommunications, Inc.	**ICG Telecom Group, Inc.**
By: Original Signature on File	By: Original Signature on File
Name: Elizabeth R. A. Shiroishi	Name: Michael D. Kallet
Title: Director	Title: EVP of Operations
Date: 02/07/03	Date: 01/06/03

ATTACHMENT 3

NETWORK INTERCONNECTION

TABLE OF CONTENTS

1. GENERAL 3

2. DEFINITIONS: (FOR THE PURPOSE OF THIS ATTACHMENT) 3

3. NETWORK INTERCONNECTION 4

4. INTERCONNECTION TRUNK GROUP ARCHITECTURES 6

5. NETWORK DESIGN AND MANAGEMENT FOR INTERCONNECTION 13

6. LOCAL DIALING PARITY 17

7. INTERCONNECTION COMPENSATION 17

8. FRAME RELAY SERVICE INTERCONNECTION 23

9. ORDERING CHARGES 26

Rates	Exhibit A
Basic Architecture	Exhibit B
One Way Architecture	Exhibit C
Two Way Architecture	Exhibit D
Supergroup Architecture	Exhibit E

NETWORK INTERCONNECTION

1. GENERAL

1.1 The Parties shall provide interconnection with each other's networks for the transmission and routing of telephone exchange service (Local Traffic), ISP-bound Traffic, and exchange access (Switched Access Traffic) on the following terms:

2. DEFINITIONS: (FOR THE PURPOSE OF THIS ATTACHMENT)

2.1 For purposes of this attachment only, the following terms shall have the definitions set forth below:

2.1.1 **Call Termination** has the meaning set forth for "termination" in 47CFR § 51.701(d).

2.1.2 **Call Transport** has the meaning set forth for "transport" in 47 CFR § 51.701(c).

2.1.3 **Call Transport and Termination** is used collectively to mean the switching and transport functions from the Interconnection Point to the last point of switching.

2.1.4 **Common (Shared) Transport** is defined as the transport of the originating Party's traffic by the terminating Party over the terminating Party's common (shared) facilities between (1) the terminating Party's tandem switch and end office switch, (2) between the terminating Party's tandem switches, and/or (3) between the terminating Party's host and remote end office switches. All switches referred herein must be entered into the Local Exchange Routing Guide ("LERG").

2.1.5 **Dedicated Interoffice Facility** is defined as a switch transport facility between a Party's Serving Wire Center and the first point of switching within the LATA on the other Party's network.

2.1.6 **End Office Switching** is defined as the function that establishes a communications path between the trunk side and line side of the End Office switch.

2.1.7 **Fiber Meet** is an interconnection arrangement whereby the Parties physically interconnect their networks via an optical fiber interface at which one Party's facilities, provisioning, and maintenance responsibility begins and the other Party's responsibility ends.

2.1.8 **Interconnection Point ("IP")** is the physical telecommunications equipment interface that interconnects the networks of BellSouth and ICG.

2.1.9 IntraLATA Toll Traffic is as defined in Section 7 of this Attachment.

2.1.10 **ISP-bound Traffic** is as defined in Section 7 of this Attachment.

2.1.11 **Local Channel** is defined as a switched transport facility between a Party's Interconnection Point and the IP's Serving Wire Center.

2.1.12 **Local Traffic** is as defined in Section 7 of this Attachment.

2.1.13 **Serving Wire Center** is defined as the wire center owned by one Party from which the other Party would normally obtain dial tone for its IP.

2.1.14 **Tandem Switching** is defined as the function that establishes a communications path between two switching offices through a third switching office through the provision of trunk side to trunk side switching.

2.1.15 **Transit Traffic** is traffic originating on ICG's network that is switched and/or transported by BellSouth and delivered to a third party's network, or traffic originating on a third party's network that is switched and/or transported by BellSouth and delivered to ICG's network.

3. NETWORK INTERCONNECTION

3.1 This Attachment pertains only to the provision of network interconnection where ICG owns and provides its switch(es).

3.2 Network interconnection may be provided by the Parties at any technically feasible point within BellSouth's network. Requests to BellSouth for interconnection at points other than as set forth in this Attachment may be made through the Bona Fide Request/New Business Request process set out in this Agreement.

3.2.1 Each Party is responsible for providing, engineering and maintaining the network on its side of the IP. The IP must be located within BellSouth's serving territory in the LATA in which traffic is originating. The IP determines the point at which the originating Party shall pay the terminating Party for the Call Transport and Termination of Local Traffic, ISP-bound Traffic and IntraLATA Toll Traffic.

3.2.2 Pursuant to the provisions of this Attachment, the location of the initial IP in a given LATA shall be established by mutual agreement of the Parties. Subject to the requirements for installing additional IPs, as set forth below, any IPs existing prior to the Effective Date of the Agreement will be accepted as initial IPs and will not require re-grooming. When the Parties mutually agree to utilize two-way interconnection trunk groups for the exchange of Local Traffic, ISP-bound Traffic and IntraLATA Toll Traffic between each other, the Parties shall mutually agree to the location of IP(s). If the Parties are unable to agree to a mutual initial IP, each Party, as originating Party, shall establish a single IP in the LATA for the delivery of its originated Local Traffic, ISP-bound Traffic and IntraLATA Toll Traffic to the other Party for Call Transport and Termination by the terminating Party.

3.2.3 When first establishing the interconnection arrangement in each LATA, the location of the IP shall be established by mutual agreement of the Parties. In selecting the IP, both Parties will act in good faith and select the point that is most efficient for both Parties. If the Parties are unable to agree on the location of the IP, each Party will designate IPs for its originated traffic. Additional IP(s) in a LATA may be established by mutual agreement of the Parties. Notwithstanding the foregoing, additional IP(s) in a particular LATA shall be established, at the request of either Party, when the Local Traffic and ISP-bound Traffic exceeds 8.9 million minutes per month for three consecutive months at the proposed location of the additional IP. BellSouth will not request the establishment of an IP where physical or virtual collocation space is not available or where BellSouth fiber connectivity is not available. When the Parties agree to utilize two-way interconnection trunk groups for the exchange of Local Traffic, ISP-bound Traffic and IntraLATA Toll Traffic the Parties must agree to the location of the IP(s).

3.3 **Interconnection via Dedicated Facilities**

3.3.1 **Local Channel Facilities.** As part of Call Transport and Termination, the originating Party may obtain Local Channel facilities from the terminating Party. The percentage of Local Channel facilities utilized for Local Traffic shall be determined based upon the application of the Percent Local Facility (PLF) Factor on a statewide basis. The charges applied to the percentage of Local Channel facilities used for Local Traffic as determined by the PLF are as set forth in Exhibit A to this Attachment. The remaining percentage of Local Channel facilities shall be billed at BellSouth's applicable access tariff rates.

3.3.2 **Dedicated Interoffice Facilities.** As a part of Call Transport and Termination, the originating Party may obtain Dedicated Interoffice Facilities from the terminating Party. The percentage of Dedicated Interoffice Facilities utilized for Local Traffic shall be determined based upon the application of the Percent Local Facility (PLF) Factor on a statewide basis. The charges applied to the percentage of the Dedicated Interoffice Facilities used for Local Traffic as determined by the PLF are as set forth in Exhibit A to this Attachment. The remaining percentage of the Dedicated Interoffice Facilities shall be billed at BellSouth's applicable access tariff rates.

3.3.3 The facilities purchased pursuant to this Section 3 shall be ordered via the Access Service Request ("ASR") process.

3.4 **Fiber Meet**

3.4.1 If ICG elects to interconnect with BellSouth pursuant to a Fiber Meet, ICG and BellSouth shall jointly engineer, operate and maintain a Synchronous Optical Network ("SONET") transmission system by which they shall interconnect their transmission and routing of Local Traffic via a Local Channel at either the DS1 or DS3 level. The Parties shall work jointly to determine the specific transmission

system. However, ICG's SONET transmission system must be compatible with BellSouth's equipment, and the Data Communications Channel (DCC) must be turned off.

3.4.2 Each Party, at its own expense, shall procure, install and maintain the agreed upon SONET transmission system in its network.

3.4.3 The Parties shall agree to a Fiber Meet point between the BellSouth Serving Wire Center and the ICG Serving Wire Center. The Parties shall deliver their fiber optic facilities to the Fiber Meet point with sufficient spare length to reach the fusion splice point for the Fiber Meet Point. BellSouth shall, at its own expense, provide and maintain the fusion splice point for the Fiber Meet. A building type Common Language Location Identification ("CLLI") code will be established for each Fiber Meet point. All orders for interconnection facilities from the Fiber Meet point shall indicate the Fiber Meet point as the originating point for the facility.

3.4.4 Upon verbal request by ICG, BellSouth shall allow ICG access to the fusion splice point for the Fiber Meet point for maintenance purposes on ICG's side of the Fiber Meet point.

3.4.5 Neither Party shall charge the other for its Local Channel portion of the Fiber Meet facility used exclusively for Local Traffic. All other appropriate charges will apply. ICG shall be billed for a mixed use of the Local Channel as set forth in the appropriate tariff(s) using the PIU/PLF factors supplied by ICG. Charges for switched and special access services shall be billed in accordance with the applicable access service tariff.

4. INTERCONNECTION TRUNK GROUP ARCHITECTURES

4.1 BellSouth and ICG shall establish interconnecting trunk groups and trunk group configurations between networks, including the use of one-way or two-way trunks in accordance with the following provisions set forth in this Agreement. For trunking purposes, traffic will be routed based on the digits dialed by the originating end user and in accordance with the LERG.

4.2 ICG shall establish an interconnection trunk group(s) to at least one BellSouth access tandem within the LATA for the delivery of ICG's originated Local Traffic, ISP-bound Traffic and IntraLATA Toll Traffic and for the receipt and delivery of Transit Traffic. To the extent ICG desires to deliver Local Traffic, ISP-bound Traffic, IntraLATA Toll Traffic and/or Transit Traffic to BellSouth access tandems within the LATA, other than the tandems(s) to which ICG has established interconnection trunk groups, ICG shall order Multiple Tandem Access, as described in this Attachment, to such other BellSouth access tandems.

4.2.1 Notwithstanding the forgoing, ICG shall establish an interconnection trunk group(s) to all BellSouth access and local tandems in the LATA where ICG has

homed (i.e. assigned) its NPA/NXXs. ICG shall home its NPA/NXXs on the BellSouth tandems that serve the exchange rate center areas to which the NPA/NXXs are assigned. The specified exchange rate center assigned to each BellSouth tandem is defined in the LERG. ICG shall enter its NPA/NXX access and/or local tandem homing arrangements into the LERG.

4.3 Switched access traffic will be delivered to and from Interexchange Carriers (IXCs) based on ICG's NXX access tandem homing arrangement as specified by ICG in the LERG.

4.4 Any ICG interconnection request that (1) deviates from the interconnection trunk group architectures as described in this Agreement, (2) affects traffic delivered to ICG from a BellSouth switch, and (3) requires special BellSouth switch translations and other network modifications will require ICG to submit a Bona Fide Request/New Business Request (BFR/NBR) via the BFR/NBR Process as set forth in this Agreement.

4.5 Recurring and non-recurring rates associated with interconnecting trunk groups between BellSouth and ICG are set forth in Exhibit A. To the extent a rate associated with the interconnecting trunk group is not set forth in Exhibit A, the rate shall be as set forth in the appropriate BellSouth tariff for switched access services.

4.6 For two-way trunk groups that carry only both Parties' Local and IntraLATA TollTraffic, the Parties shall be compensated at 50% of the nonrecurring and recurring rates for dedicated trunks and DS1 facilities. ICG shall be responsible for ordering and paying for any two-way trunks carrying Transit Traffic.

4.7 All trunk groups will be provisioned as Signaling System 7 (SS7) capable where technically feasible. If SS7 is not technically feasible multi-frequency (MF) protocol signaling shall be used.

4.8 In cases where ICG is also an IXC, the IXC's Feature Group D (FG D) trunk group(s) must remain separate from the local interconnection trunk group(s).

4.9 Each Party shall order interconnection trunks and trunk group including trunk and trunk group augmentations via the ASR process. A Firm Order Confirmation (FOC) shall be returned to the ordering Party, after receipt of a valid, error free ASR, within the timeframes set forth in each state's applicable Performance Measures. Notwithstanding the foregoing, blocking situations and projects shall be managed through BellSouth's Local Interconnection Switching Center (LISC) Project Management Group and ICG's equivalent trunking group, and FOCs for such orders shall be returned in the timeframes applicable to the project. A project is defined as (1) a new trunk group or (2) a request for more than 96 trunks on a single or multiple group(s) in a given BellSouth local calling area.

4.10 **Interconnection Trunk Groups for Exchange of Local Traffic and Transit Traffic**

Upon mutual agreement of the Parties in a joint planning meeting, the Parties' shall exchange Local Traffic on two-way interconnection trunk group(s) with the quantity of trunks being mutually determined and the provisioning being jointly coordinated. Furthermore, the Parties shall agree upon the IP(s) for two-way interconnection trunk groups transporting both Parties' Local Traffic, ISP-bound Traffic and IntraLATA Toll Traffic. ICG shall order such two-way trunks via the Access Service Request (ASR) process. BellSouth will use the Trunk Group Service Request (TGSR) to request changes in trunking. Furthermore, the Parties shall jointly review trunk performance and forecasts on a periodic basis. The Parties' use of two-way interconnection trunk groups for the transport of Local Traffic, ISP-bound Traffic and IntraLATA Toll Traffic between the Parties does not preclude either Party from establishing additional one-way interconnection trunks for the delivery of its originated Local Traffic, ISP-bound Traffic and IntraLATA Toll Traffic to the other Party.

4.10.1 **BellSouth Access Tandem Interconnection**

BellSouth access tandem interconnection at a single access tandem provides access to those end offices subtending that access tandem ("Intratandem Access"). Access tandem interconnection is available for any of the following access tandem architectures

4.10.1.1 **Basic Architecture**

In the basic architecture, ICG's originating Local Traffic, ISP-bound Traffic and IntraLATA Toll Traffic and originating and terminating Transit Traffic is transported on a single two-way trunk group between ICG and BellSouth access tandem(s) within a LATA to provide Intratandem Access. This trunk group carries Transit Traffic between ICG and Independent Companies, Interexchange Carriers, other CLECs, CMRS providers that have a Meet Point Billing arrangement with BellSouth, and other network providers with which ICG desires to exchange traffic. This trunk group also carries ICG originated Transit Traffic transiting a single BellSouth access tandem destined to third party tandems such as an Independent Company tandem or other CLEC tandem. BellSouth originated Local Traffic, ISP-bound Traffic and IntraLATA Toll Traffic is transported on a separate single one-way trunk group terminating to ICG. Other trunk groups for operator services, directory assistance, emergency services and intercept must be established pursuant to the applicable BellSouth tariff if service is requested. The LERG contains current routing and tandem serving arrangements. The basic Architecture is illustrated in Exhibit B.

4.10.1.2 **One-Way Trunk Group Architecture**

In one-way trunk group architecture, the Parties interconnect using three separate trunk groups. A one-way trunk group provides Intratandem Access for ICG-originated Local Traffic, ISP-bound Traffic and IntraLATA Toll Traffic destined

for BellSouth end-users. A second one-way trunk group carries BellSouth-originated Local Traffic, ISP-bound Traffic and IntraLATA Toll Traffic destined for ICG end-users. A two-way trunk group provides Intratandem Access for ICG's originating and terminating Transit Traffic. This trunk group carries Transit Traffic between ICG and Independent Companies, Interexchange Carriers, other CLECs, CMRS providers that have a Meet Point Billing arrangement with BellSouth, and other network providers with which ICG desires to exchange traffic. This trunk group also carries ICG originated Transit Traffic transiting a single BellSouth access tandem destined to third party tandems such as an Independent Company tandem or other CLEC tandem. BellSouth originated Local Traffic, ISP-bound Traffic and IntraLATA Toll Traffic is transported on a separate single one-way trunk group terminating to ICG. Other trunk groups for operator services, directory assistance, emergency services and intercept must be established pursuant to the applicable BellSouth tariff if service is requested. The LERG contains current routing and tandem serving arrangements. The one-way trunk group architecture is illustrated in Exhibit C.

4.10.1.3 **Two-Way Trunk Group Architecture**

The two-way trunk group Architecture establishes one two-way trunk group to provide Intratandem Access for the exchange of Local Traffic, ISP-bound Traffic and IntraLATA Toll Traffic between ICG and BellSouth. In addition, a separate two-way transit trunk group must be established for ICG's originating and terminating Transit Traffic. This trunk group carries Transit Traffic between ICG and Independent Companies, Interexchange Carriers, other CLECs, CMRS providers that have a Meet Point Billing arrangement with BellSouth, and other network providers with which ICG desires to exchange traffic. This trunk group also carries ICG originated Transit Traffic transiting a single BellSouth access tandem destined to third party tandems such as an Independent Company tandem or other CLEC tandem. BellSouth originated traffic may, in order to prevent or remedy traffic blocking situations, be transported on a separate single one-way trunk group terminating to ICG. However, where ICG is responsive in a timely manner to BellSouth's transport needs for its originated traffic, BellSouth originating traffic will be placed on the two-way Local Traffic trunk group carrying ISP-bound Traffic and IntraLATA Toll Traffic. Other trunk groups for operator services, directory assistance, emergency services and intercept must be established pursuant to the applicable BellSouth tariff if service is requested. The LERG contains current routing and tandem serving arrangements. The two-way trunk group architecture is illustrated in Exhibit D.

4.10.1.4 **Supergroup Architecture**

In the supergroup architecture, the Parties' Local Traffic, ISP-bound Traffic and IntraLATA Toll Traffic and ICG's Transit Traffic are exchanged on a single two-way trunk group between ICG and BellSouth to provide Intratandem Access to ICG. This trunk group carries Transit Traffic between ICG and Independent Companies, Interexchange Carriers, other CLECs, CMRS providers that have a

Meet Point Billing arrangement with BellSouth, and other network providers with which ICG desires to exchange traffic. This trunk group also carries ICG originated Transit Traffic transiting a single BellSouth access tandem destined to third party tandems such as an Independent Company tandem or other CLEC tandem. BellSouth originated traffic may, in order to prevent or remedy traffic blocking situations, be transported on a separate single one-way trunk group terminating to ICG. However, where ICG is responsive in a timely manner to BellSouth's transport needs for its originated traffic, BellSouth originating traffic will be placed on the Supergroup. Other trunk groups for operator services, directory assistance, emergency services and intercept must be established pursuant to the applicable BellSouth tariff if service is requested. The LERG contains current routing and tandem serving arrangements. The supergroup architecture is illustrated in Exhibit E.

4.10.1.5 Multiple Tandem Access Interconnection

4.10.1.5.1 Where ICG does not choose access tandem interconnection at every BellSouth access tandem within a LATA, ICG may utilize BellSouth's multiple tandem access interconnection (MTA). To utilize MTA ICG must establish an interconnection trunk group(s) at a BellSouth access tandem through multiple BellSouth access tandems within the LATA as required. BellSouth will route ICG's originated Local Traffic, ISP-bound Traffic and IntraLATA Toll Traffic for LATA wide transport and termination. ICG must also establish an interconnection trunk group(s) at all BellSouth access tandems where ICG NXXs are homed as described in Section 4.2.1 above. If ICG does not have NXXs homed at any particular BellSouth access tandem within a LATA and elects not to establish an interconnection trunk group(s) at such BellSouth access tandem, ICG can order MTA in each BellSouth access tandem within the LATA where it does have an interconnection trunk group(s) and BellSouth will terminate ICG's Local Traffic, ISP-bound Traffic and IntraLATA Toll Traffic to end-users served through those BellSouth access tandems where ICG does not have an interconnection trunk group(s). MTA shall be provisioned in accordance with BellSouth's Ordering Guidelines.

4.10.1.5.2 ICG may also utilize MTA to route its originated Transit Traffic; provided, however, that MTA may not be utilized to route switched access traffic that transits the BellSouth network to an Interexchange Carrier (IXC). Switched access traffic originated by or terminated to ICG will be delivered to and from IXCs based on ICG's NXX access tandem homing arrangement as specified by ICG in the LERG.

4.10.1.5.3 Compensation for MTA shall be at the applicable tandem switching and transport charges specified in Exhibit A to this Attachment and shall be billed in addition to any Call Transport and Termination charges.

4.10.1.5.4 To the extent ICG does not purchase MTA in a LATA served by multiple access tandems, ICG must establish an interconnection trunk group(s) to every access tandem in the LATA to serve the entire LATA. To the extent ICG routes its traffic in such a way that utilizes BellSouth's MTA service without properly ordering MTA, ICG shall pay BellSouth the associated MTA charges.

4.10.2 **Local Tandem Interconnection**

4.10.2.1 Local Tandem Interconnection arrangement allows ICG to establish an interconnection trunk group(s) at BellSouth local tandems for: (1) the delivery of ICG-originated Local Traffic, ISP-bound Traffic and IntraLATA Toll Traffic transported and terminated by BellSouth to BellSouth end offices served by those BellSouth local tandems, and (2) for local Transit Traffic transported by BellSouth for third party network providers who have also established an interconnection trunk group(s) at those BellSouth local tandems.

4.10.2.2 When a specified local calling area is served by more than one BellSouth local tandem, ICG must designate a "home" local tandem for each of its assigned NPA/NXXs and establish trunk connections to such local tandems. Additionally, ICG may choose to establish an interconnection trunk group(s) at the BellSouth local tandems where it has no codes homing but is not required to do so. ICG may deliver Local Traffic, ISP-bound Traffic and IntraLATA Toll Traffic to a "home" BellSouth local tandem that is destined for other BellSouth or third party network provider end offices subtending other BellSouth local tandems in the same local calling area where ICG does not choose to establish an interconnection trunk group(s). It is ICG's responsibility to enter its own NPA/NXX local tandem homing arrangements into the LERG either directly or via a vendor in order for other third party network providers to determine appropriate traffic routing to ICG's codes. Likewise, ICG shall obtain its routing information from the LERG.

4.10.2.3 Notwithstanding establishing an interconnection trunk group(s) to BellSouth's local tandems, ICG must also establish an interconnection trunk group(s) to BellSouth access tandems within the LATA on which ICG has NPA/NXXs homed for the delivery of Interexchange Carrier Switched Access (SWA) and toll traffic, and traffic to Type 2A CMRS connections located at the access tandems. BellSouth shall not switch SWA traffic through more than one BellSouth access tandem. SWA, Type 2A CMRS or toll traffic routed to the local tandem in error will not be backhauled to the BellSouth access tandem for completion. (Type 2A CMRS interconnection is defined in BellSouth's A35 General Subscriber Services Tariff).

4.10.2.4 BellSouth's provisioning of Local Tandem Interconnection assumes that ICG has executed the necessary local interconnection agreements with the other third party network providers subtending those local tandems as required by the Act.

4.10.3 **Direct End Office-to-End Office Interconnection**

4.10.3.1 Direct End Office-to-End Office one-way or two-way interconnection trunk groups allow for the delivery of a Party's originating Local Traffic, ISP-bound Traffic and IntraLATA Toll Traffic to the terminating Party on a direct end office-to-end office basis.

4.10.3.2 The Parties shall utilize direct end office-to-end office trunk groups under any one of the following conditions:

4.10.3.2.1 Tandem Exhaust - If a tandem through which the Parties are interconnected is unable to, or is forecasted to be unable to support additional traffic loads for any period of time, the Parties will mutually agree on an end office trunking plan that will alleviate the tandem capacity shortage and ensure completion of traffic between ICG and BellSouth.

4.10.3.2.2 Traffic Volume –To the extent either Party has the capability to measure the amount of traffic between ICG's switch and a BellSouth end office and where such traffic exceeds or is forecasted to exceed a single DS1 of traffic per month, then the Parties shall install and retain direct end office trunking sufficient to handle such traffic volumes. Either Party will install additional capacity between such points when overflow traffic exceeds or is forecasted to exceed a single DS1 of traffic per month. In the case of one-way trunking, additional trunking shall only be required by the Party whose trunking has achieved the preceding usage threshold.

4.10.3.2.3 Mutual Agreement - The Parties may install direct end office trunking upon mutual agreement in the absence of conditions (1) or (2) above.

4.10.4 **Transit Traffic Trunk Group**

Transit Traffic trunks can either be two-way trunks or two one-way trunks ordered by ICG to deliver and receive Transit Traffic. Establishing Transit Traffic trunks at BellSouth access and local tandems provides intratandem access to the third parties also interconnected at those tandems.

4.10.4.1 **Toll Free Traffic**

4.10.4.1.1 If ICG chooses BellSouth to perform the Service Switching Point ("SSP") Function (i.e., handle Toll Free database queries) from BellSouth's switches, all ICG originating Toll Free traffic will be routed over the Transit Traffic Trunk Group and shall be delivered using GR-394 format. Carrier Code "0110" and Circuit Code (to be determined for each LATA) shall be used for all such calls.

4.10.4.1.2 ICG may choose to perform its own Toll Free database queries from its switch. In such cases, ICG will determine the nature (local/intraLATA/interLATA) of the Toll Free call (local/IntraLATA/InterLATA) based on the response from the database. If the call is a BellSouth local or intraLATA Toll Free call, ICG will route the post-query local or IntraLATA converted ten-digit local number to

BellSouth over the local or intraLATA trunk group. If the call is a third party (ICO, IXC, CMRS or other CLEC) local or intraLATA Toll Free call, ICG will route the post-query local or intraLATA converted ten-digit local number to BellSouth over the Transit Traffic Trunk Group and ICG shall provide to BellSouth a Toll Free billing record when appropriate. If the query reveals the call is an interLATA Toll Free call, ICG will route the post-query interLATA Toll Free call (1) directly from its switch for carriers interconnected with its network or (2) over the Transit Traffic Trunk Group to carriers that are not directly connected to ICG's network but that are connected to BellSouth's access tandem.

4.10.5 All post-query Toll Free calls for which ICG performs the SSP function, if delivered to BellSouth, shall be delivered using GR-394 format for calls destined to IXCs, and GR-317 format for calls destined to end offices that directly subtend a BellSouth access tandem within the LATA.

5. NETWORK DESIGN AND MANAGEMENT FOR INTERCONNECTION

5.1 Network Management and Changes. The Parties will exchange toll-free maintenance contact numbers and escalation procedures. The Parties will provide public notice of network changes in accordance with applicable federal and state rules and regulations.

5.2 Interconnection Technical Standards. The interconnection of all networks will be based upon accepted industry/national guidelines for transmission standards and traffic blocking criteria. Interconnecting facilities shall conform, at a minimum, to the telecommunications industry standard of DS-1 pursuant to Telcordia Standard No. TR-NWT-00499. Where ICG chooses to utilize Signaling System 7 signaling, also known as Common Channel Signaling ("SS7"), SS7 connectivity is required between the ICG switch and the BellSouth Signaling Transfer Point ("STP"). BellSouth will provide SS7 signaling using Common Channel Signaling Access Capability in accordance with the technical specifications set forth in the BellSouth Guidelines to Technical Publication, TR-TSV-000905. Facilities of each Party shall provide the necessary on-hook, off-hook answer and disconnect supervision and shall provide calling number ID (Calling Party Number) when technically feasible.

5.3 Quality of Interconnection. The local interconnection for the transmission and routing of telephone exchange service and exchange access that each Party provides to each other will be at least equal in quality to what it provides to itself and any subsidiary or affiliate, where technically feasible, or to any other Party to which each Party provides local interconnection.

5.4 Network Management Controls. Both Parties will work cooperatively to apply sound network management principles by invoking appropriate network management controls (e.g., call gapping) to alleviate or prevent network congestion.

5.5 SS7 Signaling. Both Parties will utilize LEC-to-LEC SS7 Signaling, where available, in conjunction with all traffic in order to enable full interoperability of CLASS features and functions except for call return. All SS7 signaling parameters will be provided, including but not limited to automatic number identification ("ANI"), originating line information ("OLI") calling company category and charge number. All privacy indicators will be honored, and the Parties will exchange Transactional Capabilities Application Part ("TCAP") messages to facilitate full interoperability of SS7-based features between the respective networks. Neither Party shall alter the SS7 parameters, or be a party to altering such parameters, or knowingly pass SS7 parameters that have been altered in order to circumvent appropriate interconnection charges.

5.6 Signaling Call Information. BellSouth and ICG will send and receive 10 digits for Local Traffic. Additionally, BellSouth and ICG will exchange the proper call information, i.e. originated call company number and destination call company number, CIC, and OZZ, including all proper translations for routing between networks and any information necessary for billing.

5.7 **Forecasting for Trunk Provisioning**

5.7.1 Within six (6) months after execution of this Agreement, ICG shall provide an initial interconnection trunk group forecast for each LATA in which it plans to provide service within BellSouth's region. Upon receipt of ICG's forecast, the Parties shall conduct a joint planning meeting to develop a joint interconnection trunk group forecast. Each forecast provided under this Section shall be deemed "Confidential Information" under the General Terms and Conditions of this Agreement.

5.7.1.1 At a minimum, the forecast shall include the projected quantity of Transit Trunks, ICG-to-BellSouth one-way trunks ("ICG Trunks"), BellSouth-to-ICG one-way trunks ("Reciprocal Trunks") and/or two-way interconnection trunks, if the Parties have agreed to interconnect using two-way trunking to transport the Parties' Local Traffic and IntraLATA Toll Traffic. The quantities shall be projected for a minimum of six months and shall include an estimate of the current year plus the next two years total forecasted quantities. The Parties shall mutually develop Reciprocal Trunk and/or two-way interconnection trunk forecast quantities.

5.7.1.2 All forecasts shall include, at a minimum, Access Carrier Terminal Location ("ACTL"), trunk group type (local/intraLATA toll, Transit, Operator Services, 911, etc.), A location/Z location (CLLI codes for ICG location and BellSouth location where the trunks shall terminate), interface type (e.g., DS1), Direction of Signaling, Trunk Group Number, if known, (commonly referred to as the 2-6 code) and forecasted trunks in service each year (cumulative).

5.7.2 Once initial interconnection trunk forecasts have been developed, ICG shall continue to provide interconnection trunk forecasts on a semiannual basis or at

otherwise mutually agreeable intervals. ICG shall use its best efforts to make the forecasts as accurate as possible based on reasonable engineering criteria. The Parties shall continue to develop Reciprocal Trunk and/or two-way interconnection trunk forecasts as described in Section 5.7.1.1.

5.7.3 The submitting and development of interconnection trunk forecasts shall not replace the ordering process for local interconnection trunks. Each Party shall exercise its best efforts to provide the quantity of interconnection trunks mutually forecasted. However, the provision of the forecasted quantity of interconnection trunks is subject to trunk terminations and facility capacity existing at the time the trunk order is submitted. Furthermore, the receipt and development of trunk forecasts does not imply any liability for failure to perform if capacity (trunk terminations or facilities) is not available for use at the forecasted time.

5.8 **Trunk Utilization**

5.8.1 BellSouth and ICG shall monitor traffic on each interconnection trunk group that is ordered and installed. The Parties agree that within 180 days of the installation of a trunk or trunks, the trunks will be utilized at 60 percent (60%) of the time consistent busy hour utilization level. The Parties agree that within 365 days of the installation of a trunk or trunks, the trunks will be utilized at eighty percent (80%) of the time consistent busy hour utilization level. Any trunk or trunks not meeting the minimum thresholds set forth in this Section are defined as "Under-utilized" trunks. BellSouth may disconnect any Under-utilized reciprocal trunk(s) and the Party whose trunks are disconnected shall refund to the other Party associated trunk and facility charges paid by such other Party, if any.

5.8.1.1 BellSouth's Local Interconnection Switching Center (LISC) will notify ICG of any under-utilized reciprocal trunk groups and the number of trunks that BellSouth wishes to disconnect. BellSouth will provide supporting information either by email or facsimile to the designated ICG interface. ICG will provide concurrence with the disconnection in seven (7) business days or will provide specific information supporting why the trunks should not be disconnected. Such supporting information should include expected traffic volumes (including traffic volumes generated due to Local Number Portability) and the timeframes within which ICG expects to need such trunks. BellSouth's LISC Project Manager and Circuit Capacity Manager will discuss the information with ICG to determine if agreement can be reached on the number of trunks to be removed. If no agreement can be reached, BellSouth will issue disconnect orders to ICG. The due date of these orders will be four weeks after ICG was first notified in writing of the underutilization of the trunk groups.

5.8.2 To the extent that any interconnection trunk group is utilized at a time-consistent busy hour of eighty percent (80%) or greater, the Parties shall negotiate in good faith for the installation of augmented facilities.

5.9 Common Channel Signaling. Both Parties shall provide LEC-to-LEC Common Channel Signaling (CCS) to each other, where available, in conjunction with all traffic in order to enable full interoperability of CLASS features and functions except for call return. All CCS signaling parameters will be provided, including automatic number identification (ANI), calling party number (CPN), originating line information (OLI), calling company category, charge number, etc. All privacy indicators will be honored, and each Party will cooperate with the other on the exchange of Transactional Capabilities Application Part (TCAP) messages to facilitate full interoperability of CCS-based features between the respective networks. Where available, network signaling information such as Carrier Identification Parameter (CCS platform), at the standard tariff rates, and CIC/OZZ information (non-CCS environment) will be provided wherever such information is needed for call routing or billing. The Parties will follow all Ordering and Billing Forum (OBF) adopted standards pertaining to CIC/OZZ codes. Where CCS is not available, in-band multi-frequency (MF) wink start E&M channel associated signaling will be provided. Such MF arrangements will require a separate trunk group between ICG's switch and one specified BellSouth switch. ICG shall establish CCS interconnection with BellSouth signal transfer points (STPs) in each LATA, either directly or via an intermediary STP provider.

5.9.1 All ISUP charges for the SS7 interconnection elements (including port charge, SS7 network usage, and the SS7 link) shall be 'bill and keep', i.e., neither Party shall pay compensation to the other Party for these elements. Charges for TCAP database queries, or "dips", will not be on a bill and keep basis, but will be billed by each Party to the other as provided in Attachment 2, Exhibit B.

5.9.2 Call Information. BellSouth and ICG will send and receive ten (10) digits for local traffic. BellSouth and ICG shall exchange the proper call information, i.e., originated call company number and destination call company number, CIC, and OZZ, including all proper translations for routing between networks and any information necessary for billing.

5.9.3 Each Party is responsible for requesting Interconnection to the other Party's CCS network, where SS7 signaling on the trunk group(s) is desired. The Parties shall establish Interconnection at the STP.

5.9.4 Where available and upon the request of the other Party, each Party shall cooperate to ensure that its trunk groups are configured utilizing the B8Zs ESF protocol for 64 kbps clear channel transmission to allow for ISDN interoperability between the Parties' respective networks.

5.9.5 All originating Toll Free Service calls for which BellSouth performs the Service Switching Point (SSP) function (e.g., performs the database query) shall be delivered by ICG using GR-394 format over the transit trunk group. Carrier Code "0110" and Circuit Code of "08" shall be used for all such calls. In the event ICG becomes a toll free service provider, BellSouth shall deliver traffic using the GR-394 format over a trunk group designated for Toll Free Service.

5.9.6 All originating Toll Free Service calls for which ICG performs the SSP function, if delivered to BellSouth, shall be delivered by ICG using GR-394 format over the transit trunk group for calls destined to IXCs, or shall be delivered by ICG using GR-317 format over the Local Interconnection Trunk Group for calls destined to end offices that directly subtend BellSouth access tandems.

6. LOCAL DIALING PARITY

6.1 BellSouth and ICG shall provide local and toll dialing parity, as defined in FCC rules and regulations, with no unreasonable dialing delays. Dialing parity shall be provided for all originating telecommunications services that require dialing to route a call.

7. INTERCONNECTION COMPENSATION

7.1 Compensation for Call Transportation and Termination for Local Traffic, ISP-bound Traffic and IntraLATA Toll Traffic

7.1.1 Pursuant to the Parties' agreement on Sections 7.1.4 and all subsections of 7.1.4. below and for reciprocal compensation between the Parties pursuant to this Attachment, Local Traffic is defined as any circuit switched call that is originated by an end user of one Party and terminated to an end user of the other Party within a given LATA on that other Party's network, except for those calls that are originated or terminated through switched access arrangements as established by the ruling regulatory body.

7.1.1.1 Additionally, Local Traffic includes any cross boundary, voice-to-voice intrastate, interLATA or interstate, interLATA calls established as a local call by the ruling regulatory body.

7.1.2 ISP-bound Traffic is defined as calls to an information service provider or Internet service provider ("ISP") that are dialed by using a local dialing pattern (7 or 10 digits) by a calling party in one LATA to an ISP server or modem in the same LATA. ISP-bound Traffic is not Local Traffic subject to reciprocal compensation, but instead is information access traffic subject to the FCC's jurisdiction.

7.1.3 Notwithstanding the definitions of Local Traffic and ISP-bound traffic above, and pursuant to the FCC's Order on Remand and Report and Order in CC Docket 99-68 released April 27, 2001 ("ISP Order on Remand"), BellSouth and ICG agree to the rebuttable presumption that all combined circuit switched Local and ISP-bound Traffic delivered to BellSouth or ICG that exceeds a 3:1 ratio of terminating to originating traffic on a statewide basis shall be considered ISP-bound traffic for compensation purposes. BellSouth and ICG further agree to the rebuttable presumption that all combined circuit switched Local and ISP-bound Traffic delivered to BellSouth or ICG that does not exceed a 3:1 ratio of terminating to originating traffic on a statewide basis shall be considered Local Traffic for compensation purposes.

7.1.4 The Parties will compensate each other for the transport and termination of Local Traffic and ISP-bound Traffic as follows:

7.1.4.1 In the states of Alabama, Georgia, Kentucky, North Carolina, and Tennessee, the Parties will compensate each other on a mutual and reciprocal basis for transport and termination of Local Traffic and ISP-bound Traffic at the composite rates set forth in Exhibit A to this Attachment, subject to the terms and conditions set forth in Section 7.1.4.1.1 below.

7.1.4.1.1 Notwithstanding anything to the contrary in this Agreement, the volume of ISP-bound Traffic for which one Party may bill the other shall be capped as follows:

7.1.4.1.2 For ISP-bound Traffic exchanged during the year 2003 through the expiration of this Agreement, compensation, at the rates set forth in Exhibit A of this Agreement, shall be billed by the terminating Party to the originating Party on ISP-bound Traffic minutes up to a ceiling equal to a ten percent growth factor added to, on an annualized basis, the number of ISP bound Traffic minutes for which the terminating Party was entitled to compensation during the first quarter of 2001, plus an additional ten percent.

7.1.4.1.2.1 Any ISP-bound Traffic that exceeds the minute of use caps described above shall be exchanged on a bill and keep basis, and no compensation shall be paid to the terminating Party therefore.

7.1.4.1.3 In the states of Florida, Louisiana, Mississippi, and South Carolina, the Parties will compensate each other on a mutual and reciprocal basis for transport and termination of Local Traffic at the appropriate elemental rates set forth in Exhibit A of this Agreement. Neither Party shall pay compensation to the other Party for

per minute of use rate elements associated with the Call Transport and Termination of ISP-bound Traffic.

7.1.5 The appropriate elemental rates set forth in Exhibit A of this Attachment shall apply for Transit Traffic as described in Sections 7.6 and 7.6.1 below and to Multiple Tandem Access as described in Section 4.10.1.5 above.

7.1.6 Neither Party shall represent Switched Access Traffic as Local Traffic or ISP-bound Traffic for purposes of determining compensation for the call.

7.1.7 If ICG assigns NPA/NXXs to specific BellSouth rate centers within the LATA and assigns numbers from those NPA/NXXs to ICG end users physically located outside of that LATA, BellSouth traffic originating from within the LATA where the NPA/NXXs are assigned and delivered to a ICG customer physically located outside of such LATA, shall not be deemed Local Traffic. Further, ICG agrees to identify such interLATA traffic to BellSouth and to compensate BellSouth for originating and transporting such interLATA traffic to ICG at BellSouth's switched access tariff rates.

7.2 If ICG does not identify such interLATA traffic to BellSouth, to the best of BellSouth's ability BellSouth will determine which whole ICG NPA/NXXs on which to charge the applicable rates for originating network access service as reflected in BellSouth's Access Service Tariff. BellSouth shall make appropriate billing adjustments if ICG can provide sufficient information for BellSouth to determine whether or not said traffic is Local or ISP-bound Traffic.

7.3 **Jurisdictional Reporting**

7.3.1 **Percent Local Use.** Each Party shall report to the other a Percent Local Usage ("PLU") factor. The application of the PLU will determine the amount of local or ISP-bound minutes to be billed to the other Party. For purposes of developing the PLU, each Party shall consider every local and ISP-bound call and every long distance call, excluding Transit Traffic. Each Party shall update its PLU on the first of January, April, July and October of the year and shall send it to the other Party to be received no later than 30 days after the first of each such month based on local and ISP-bound usage for the past three months ending the last day of December, March, June and September, respectively. Requirements associated with PLU calculation and reporting shall be as set forth in BellSouth's Jurisdictional Factors Reporting Guide, as it is amended from time to time. Notwithstanding the foregoing, where the terminating Party has message recording technology that identifies the jurisdiction of traffic terminated as defined in this Agreement, such information, in lieu of the PLU factor, shall at the terminating Party's option be utilized to determine the appropriate local usage compensation to be paid.

7.3.2 **Percent Local Facility.** Each Party shall report to the other a Percent Local Facility ("PLF") factor. The application of the PLF will determine the portion of switched dedicated transport to be billed per the local jurisdiction rates. The PLF shall be applied to Multiplexing, Local Channel and Interoffice Channel Switched Dedicated Transport utilized in the provision of local interconnection trunks. Each Party shall update its PLF on the first of January, April, July and October of the year and shall send it to the other Party to be received no later than 30 days after the first of each such month to be effective the first bill period the following month, respectively. Requirements associated with PLU and PLF calculation and reporting shall be as set forth in BellSouth's Jurisdictional Factors Reporting Guide, as it is amended from time to time.

7.3.3 **Percent Interstate Usage**. Each Party shall report to the other the projected Percent Interstate Usage ("PIU") factor. All jurisdictional report requirements, rules and regulations for Interexchange Carriers specified in BellSouth's Intrastate Access Services Tariff will apply to ICG. After interstate and intrastate traffic percentages have been determined by use of PIU procedures, the PLU and PLF factors will be used for application and billing of local interconnection. Each Party shall update its PIUs on the first of January, April, July and October of the year and shall send it to the other Party to be received no later than 30 days after the first of each such month, for all services showing the percentages of use (PIUs, PLU, and PLF) for the past three months ending the last day of December, March, June and September. Notwithstanding the foregoing, where the terminating Party has message recording technology that identifies the jurisdiction of traffic terminated as defined in this Agreement, such information, in lieu of the PIU and PLU factors, shall at the terminating Party's option be utilized to determine the appropriate local usage compensation to be paid.

7.3.4 Notwithstanding the provisions in Section 7.3.1, 7.3.2, and 7.3.3 above, where the terminating Party has message recording technology that identifies the jurisdiction of traffic terminated as defined in this Agreement, such information shall, at the terminating Party's option, be utilized to determine the appropriate jurisdictional reporting factors (PLU, PIU, and/or PLF), in lieu of those provided by the originating Party. In the event that the terminating Party opts to utilize its own data to determine jurisdictional reporting factors, such terminating Party shall notify the originating Party at least 15 days prior to the beginning of the calendar quarter in which the terminating Party will begin to utilize its own data. Such factors shall subject to the Dispute Resolution provisions in this Agreement, as well as the Audit provisions set forth in 7.3.5 below.

7.3.5 **Audits.** On thirty (30) days written notice, each Party must provide the other the ability and opportunity to conduct an annual audit to ensure the proper billing of traffic. BellSouth and ICG shall retain records of call detail for a minimum of nine months from which the PLU, PLF and/or PIU can be ascertained. The audit shall be conducted during normal business hours at an office designated by the Party

being audited. Audit requests shall not be submitted more frequently than one (1) time per calendar year. Audits shall be performed by a mutually acceptable independent auditor paid for by the Party requesting the audit. The PLF, PLU and/or PIU shall be adjusted based upon the audit results and shall apply for the quarter the audit was completed, for the quarter prior to the completion of the audit, and for the two quarters following the completion of the audit. If, as a result of an audit, either Party is found to have overstated the PLF, PLU and/or PIU by twenty percentage points (20%) or more, that Party shall reimburse the auditing Party for the cost of the audit.

7.4 **Compensation for 8XX Traffic**

7.4.1 Compensation for 8XX Traffic. Each Party shall pay the other the appropriate switched access charges set forth in the BellSouth intrastate or interstate switched access tariffs. ICG will pay BellSouth the database query charge as set forth in the BellSouth intrastate or interstate switched access tariffs as applicable.

7.4.2 Records for 8XX Billing. Each Party will provide to the other the appropriate records necessary for billing intraLATA 8XX customers. The records provided will be in a standard EMI format.

7.4.3 8XX Access Screening. BellSouth's provision of 8XX Toll Free Dialing ("TFD") to ICG requires interconnection from ICG to BellSouth's 8XX Signal Channel Point ("SCP"). Such interconnections shall be established pursuant to BellSouth's Common Channel Signaling Interconnection Guidelines and Telcordia's CCS Network Interface Specification document, TR-TSV-000905. ICG shall establish SS7 interconnection at the BellSouth Local Signal Transfer Points serving the BellSouth 8XX SCPs that ICG desires to query. The terms and conditions for 8XX TFD are set out in BellSouth's Intrastate Access Services Tariff.

7.5 **Mutual Provision of Switched Access Service**

7.5.1 Switched Access Traffic. Switched Access Traffic is described as telephone calls requiring local transmission or switching services for the purpose of the origination or termination of Telephone Toll Service. Switched Access Traffic includes, but is not limited to, the following types of traffic: Feature Group A, Feature Group B, Feature Group C, Feature Group D, toll free access (e.g., 8XX), 900 access and their successors. Additionally, any Public Switched Telephone Network interexchange telecommunications traffic, regardless of transport protocol method, where the originating and terminating points, end-to-end points, are in different LATAs, or are in the same LATA and the Parties' Switched Access services are used for the origination or termination of the call, shall be considered Switched Access Traffic. Irrespective of transport protocol method used, a call which originates in one LATA and terminates in another LATA (i.e., the end-to-end points of the call) or in which the Parties' Switched Access Services are used for

the origination or termination of the call, shall not be considered Local Traffic or ISP-bound Traffic.

7.5.2 If the BellSouth end user chooses ICG as their presubscribed interexchange carrier, or if the BellSouth end user uses ICG as an interexchange carrier on a 101XXXX basis, BellSouth will charge ICG the appropriate BellSouth tariff charges for originating switched access services.

7.5.3 Where the originating Party delivers a call to the terminating Party over switched access facilities, the originating Party will pay the terminating Party terminating, switched access charges as set forth in BellSouth's Intrastate or Interstate Access Services Tariff, as appropriate.

7.5.4 When ICG's end office switch provides an access service connection to or from an interexchange carrier ("IXC") by a direct trunk group to the IXC utilizing BellSouth facilities, each Party will provide its own access services to the IXC and bill on a multi-bill, multi-tariff meet-point basis. Each Party will bill its own access services rates to the IXC with the exception of the interconnection charge. The interconnection charge will be billed by ICG as the Party providing the end office function. Each party will use the Multiple Exchange Carrier Access Billing (MECAB) guidelines to establish meet point billing for all applicable traffic. The parties shall utilize a thirty (30) day billing period.

7.5.4.1 When ICG's end office subtends the BellSouth Access Tandem switch for receipt or delivery of switched access traffic and provides an access service connection to or from an IXC via BellSouth's Access Tandem switch, BellSouth, as the tandem company agrees to provide to ICG, as the End Office Company, as defined in MECAB, at no charge, all the switched access detail usage data, recorded at the access tandem, within no more than sixty (60) days after the recording date. Each Party will notify the other when it is not feasible to meet these requirements. As business requirements change, data reporting requirements may be modified as necessary.

7.5.5 BellSouth, as the tandem provider company, will retain for a minimum period of sixty (60) days, access message detail sufficient to recreate any data that is lost or damaged by the tandem provider company or any third party involved in processing or transporting data.

7.5.6 BellSouth, as the tandem provider company, agrees to recreate the lost or damaged data within forty-eight (48) hours of notification by the other or by an authorized third party handling the data.

7.5.7 Any claims against BellSouth, as the tandem provider company, for unbillable or uncollectible revenue should be filed with the tandem provider company within 120 days of the usage date.

7.5.8 BellSouth, as the tandem provider company shall keep records of its billing activities relating to jointly-provided Intrastate and Interstate access services in sufficient detail to permit the Subsequent Billing Party to, by formal or informal review or audit, to verify the accuracy and reasonableness of the jointly-provided access billing data provided by the Initial Billing Party. Each Party agrees to cooperate in such formal or informal reviews or audits and further agrees to jointly review the findings of such reviews or audits in order to resolve any differences concerning the findings thereof.

7.5.9 ICG agrees not to deliver switched access traffic to BellSouth for termination except over ICG ordered switched access trunks and facilities.

7.6 **Transit Traffic**

7.6.1 BellSouth shall provide tandem switching and transport services for ICG's Transit Traffic. Rates for local Transit Traffic and ISP-bound Transit Traffic shall be the applicable Call Transport and Termination charges as set forth in Exhibit A to this Attachment. Rates for Switched Access Transit Traffic shall be the applicable charges as set forth in BellSouth Interstate or Intrastate Switched Access tariffs. Billing associated with all Transit Traffic shall be pursuant to MECAB guidelines. Traffic between ICG and Wireless Type 1 third parties shall not be treated as Transit Traffic from a routing or billing perspective. Traffic between ICG and Wireless Type 2A or a third party CLEC utilizing BellSouth switching shall not be treated as Transit Traffic from a routing or billing perspective until BellSouth and the Wireless carrier or a third party CLEC utilizing BellSouth switching have the capability to properly meet-point-bill in accordance with MECAB guidelines.

7.6.2 The delivery of traffic that transits the BellSouth network and is transported to another carrier's network is excluded from any BellSouth billing guarantees. BellSouth agrees to deliver Transit Traffic to the terminating carrier; provided, however, that ICG is solely responsible for negotiating and executing any appropriate contractual agreements with the terminating carrier for the exchange of Transit Traffic through the BellSouth network. BellSouth will not be liable for any compensation to the terminating carrier or to ICG. In the event that the terminating third party carrier imposes on BellSouth any charges or costs for the delivery of Transit Traffic, ICG shall reimburse BellSouth for such costs. Additionally, the Parties agree that any billing to a third party or other telecommunications carrier under this section shall be pursuant to MECAB procedures.

8. FRAME RELAY SERVICE INTERCONNECTION

8.1 In addition to the Local Interconnection services set forth above, BellSouth will offer a network to network Interconnection arrangement between BellSouth's and ICG's frame relay switches as set forth below. The following provisions will apply only to Frame Relay Service and Exchange Access Frame Relay Service and

Managed Shared Frame Relay Service in those states in which ICG is certified and providing Frame Relay Service as a Local Exchange Carrier and where traffic is being exchanged between ICG and BellSouth Frame Relay Switches in the same LATA.

8.2 The Parties agree to establish two-way Frame Relay facilities between their respective Frame Relay Switches to the mutually agreed upon Frame Relay Service point(s) of interconnection ("IP(s)") within the LATA. All IPs shall be within the same Frame Relay Network Serving Areas as defined in Section A40 of BellSouth's General Subscriber Service Tariff except as set forth in this Attachment.

8.3 Upon the request of either Party, such interconnection will be established where BellSouth and ICG have Frame Relay Switches in the same LATA. Where there are multiple Frame Relay switches in one central office, an interconnection with any one of the switches will be considered an interconnection with all of the switches at that central office for purposes of routing packet traffic.

8.4 The Parties agree to provision local and intraLATA Frame Relay Service and Exchange Access Frame Relay Service and Managed Shared Frame Relay Service (both intrastate and interstate) over Frame Relay interconnection facilities between the respective Frame Relay switches and the IPs.

8.5 The Parties agree to assess each other reciprocal charges for the facilities that each provides to the other according to the Percent Local Circuit Use Factor (PLCU), determined as follows:

8.5.1 If the data packets originate and terminate in locations in the same LATA, and are consistent with the local definitions of the Agreement, the traffic is considered local. Frame Relay framed packet data is transported within Virtual Circuits (VC). For the purposes of this Agreement, if all the data packets transported within a VC remain within the LATA, then consistent with the local definitions in this Agreement, the traffic on that VC is local ("Local VC").

8.5.2 If the originating and terminating locations of the two-way packet data traffic are not in the same LATA, the traffic on that VC is interLATA ("InterLATA VC").

8.5.3 The PLCU is determined by dividing the total number of Local VCs, by the total number of VCs on each Frame Relay facility. To facilitate implementation, ICG may determine its PLCU in aggregate, by dividing the total number of Local VCs in a given LATA by the total number VCs in that LATA. The Parties agree to renegotiate the method for determining PLCU, at BellSouth's request, and within 90 days, if BellSouth notifies ICG that it has found that this method does not adequately represent the PLCU.

8.5.4 If there are no VCs on a facility when it is billed, the PLCU will be zero.

8.5.5 BellSouth will provide the circuit between the Parties' respective Frame Relay Switches. The Parties will be compensated as follows: BellSouth will invoice, and ICG will pay, the total non-recurring and recurring charges for the circuit based upon the rates set forth in BellSouth's Interstate Access Tariff, FCC No. 1. ICG will then invoice, and BellSouth will pay, an amount calculated by multiplying the BellSouth billed charges for the circuit by one-half of ICG's PLCU.

8.6 The Parties agree to compensate each other for Frame Relay network-to-network interface (NNI) ports based upon the NNI rates set forth in BellSouth's Interstate Access Tariff, FCC No. 1. Compensation for each pair of NNI ports will be calculated as follows: BellSouth will invoice, and ICG will pay, the total non-recurring and recurring charges for the NNI port. ICG will then invoice, and BellSouth will pay, an amount calculated by multiplying the BellSouth billed non-recurring and recurring charges for the NNI port by ICG's PLCU.

8.7 Each Party agrees that there will be no charges to the other Party for its own subscriber's Permanent Virtual Circuit (PVC) rate elements for the local PVC segment from its Frame Relay switch to its own subscriber's premises. PVC rate elements include the Data Link Connection Identifier (DLCI) and Committed Information Rate (CIR).

8.8 For the PVC segment between the ICG and BellSouth Frame Relay switches, compensation for the PVC charges is based upon the rates in BellSouth's Interstate Access Tariff, FCC No. 1.

8.9 Compensation for PVC rate elements will be calculated as follows:

8.9.1 If ICG orders a VC connection between a BellSouth subscriber's PVC segment and a PVC segment from the BellSouth Frame Relay switch to the ICG Frame Relay switch, BellSouth will invoice, and ICG will pay, the total non-recurring and recurring PVC charges for the PVC segment between the BellSouth and ICG Frame Relay switches. If the VC is a Local VC, ICG will then invoice and BellSouth will pay, the total nonrecurring and recurring PVC charges billed for that segment. If the VC is not local, no compensation will be paid to ICG for the PVC segment.

8.9.2 If BellSouth orders a Local VC connection between a ICG subscriber's PVC segment and a PVC segment from the ICG Frame Relay switch to the BellSouth Frame Relay switch, BellSouth will invoice, and ICG will pay, the total non-recurring and recurring PVC and CIR charges for the PVC segment between the BellSouth and ICG Frame Relay switches. If the VC is a Local VC, ICG will then invoice and BellSouth will pay the total non-recurring and recurring PVC and CIR charges billed for that segment. If the VC is not local, no compensation will be paid to ICG for the PVC segment.

8.9.3 The Parties agree to compensate each other for requests to change a PVC segment or PVC service order record, according to the Feature Change charge as set forth in the BellSouth access tariff BellSouth Tariff FCC No. 1.

8.9.4 If ICG requests a change, BellSouth will invoice and ICG will pay a Feature Change charge for each affected PVC segment.

8.9.4.1 If BellSouth requests a change to a Local VC, ICG will invoice and BellSouth will pay a Feature Change charge for each affected PVC segment.

8.9.5 The Parties agree to limit the sum of the CIR for the VCs on a DS1 NNI port to not more than three times the port speed, or not more than six times the port speed on a DS3 NNI port.

8.9.6 Except as expressly provided herein, this Agreement does not address or alter in any way either Party's provision of Exchange Access Frame Relay Service, Managed Shared Frame Relay Service or interLATA Frame Relay Service. All charges by each Party to the other for carriage of Exchange Access Frame Relay Service or interLATA Frame Relay Service are included in the BellSouth access tariff BellSouth Tariff FCC No. 1.

8.10 ICG will identify and report quarterly to BellSouth the PLCU of the Frame Relay facilities it uses, per Section 8.5.3 above.

8.11 Either Party may request a review or audit of the various service components, consistent with the provisions of section E2 of the BellSouth State Access Services tariffs or Section 2 of the BellSouth FCC No.1 Tariff.

9. ORDERING CHARGES

9.1 The terms, conditions and rates for Ordering Charges are as set forth in FCC Tariff for Access Service Records.

By and Between

BellSouth Telecommunications, Inc.

And

Sprint Communications Company Limited Partnership
Sprint Spectrum L.P.

Florida Agreement

FLORIDA PUBLIC SERVICE COMMISSION
DOCKET
NO. 020919-TP EXHIBIT NO. 16
COMPANY/
WITNESS: BS/Sprint Interconnect Agreement Excerpts
DATE: 5-07-03

16

TABLE OF CONTENTS

General Terms and Conditions
Part A

1. Purpose
2. Term of the Agreement
3. Renewal
4. Ordering Procedures
5. Parity
6. White Pages Listings
7. Bona Fide Request/New Business Request Process for Further Unbundling
8. Court Ordered Requests for Call Detail Records and Other Subscriber Information
9. Liability and Indemnification
10. Intellectual Property Rights and Indemnification
11. Treatment of Proprietary and Confidential Information
12. Publicity
13. Assignments
14. Resolution of Disputes
15. Taxes
16. Force Majeure
17. Year 2000 Compliance
18. Most Favored Nations (MFN)
19. Modification of Agreement
20. Waivers
21. Governing Law
22. Audits and Examinations
23. Remedies
24. Branding
25. Network Security
26. Relationship of Parties
27. No Third Party Beneficiaries
28. Survival
29. Responsibility for Environmental Hazards
30. Notices
31. Rule of Construction
32. Headings of No Force or Effect
33. Multiple Counterparts
34. Implementation of Agreement
35. Filing of Agreement
36. Entire Agreement

TABLE OF CONTENTS (continued)

Part B - Definitions

Attachment 1 – Resale
Attachment 2 – Network Elements and Other Services
Attachment 3 – Network Interconnection
Attachment 4 – Physical Collocation
Attachment 5 – Access to Numbers and Number Portability
Attachment 6 – Ordering and Provisioning
Attachment 7 – Billing and Billing Accuracy Certification
Attachment 8 – Rights-of-Way, Conduits and Pole Attachments
Attachment 9 – Performance Measurements
Attachment 10 – Agreement Implementation Template
Attachment 11 – Disaster Recovery Plan

AGREEMENT

THIS INTERCONNECTION AND RESALE AGREEMENT is made by and between BellSouth Telecommunications, Inc., ("BellSouth"), a Georgia corporation, Sprint Communications Company Limited Partnership and Sprint Communications Company L.P. (collectively referred to as "Sprint CLEC"), a Delaware Limited Partnership and Sprint Spectrum L.P., a Delaware limited partnership, as agent and General Partner for WirelessCo, L.P., a Delaware limited partnership, and SprintCom, Inc., a Kansas corporation, all foregoing entities jointly d/b/a Sprint PCS ("Sprint PCS") ('the Agreement"). When the terms and conditions apply to both Sprint CLEC and Sprint PCS, the collective term "Sprint" shall be used. Otherwise, the applicable party shall be identified. This Agreement may refer to either BellSouth or Sprint or both as a "Party" or "Parties", and is made effective on January 1, 2001 ("Effective Date").

RECITALS

WHEREAS, BellSouth is a local exchange telecommunications company authorized to provide telecommunications services in the states of Alabama, Florida, Georgia, Kentucky, Louisiana, Mississippi, North Carolina, South Carolina, and Tennessee; and

WHEREAS, Sprint Communications Company Limited Partnership is a Competitive Local Exchange Carrier ("CLEC") authorized to provide telecommunications services in the state of Florida and Sprint Communications Company L. P. is a CLEC authorized to provide telecommunications services in the states of Alabama, Georgia, Kentucky, Louisiana, Mississippi, North Carolina, South Carolina, and Tennessee; and

WHEREAS, Sprint PCS is a Commercial Mobile Radio Service ("CMRS") provider licensed by the Federal Communications Commission ("FCC") to provide CMRS in the states of Alabama, Florida, Georgia, Kentucky, Louisiana, Mississippi, North Carolina, South Carolina and Tennessee; and

WHEREAS, the Act places certain duties and obligations upon, and grants certain rights to Telecommunications Carriers; and

WHEREAS, Sprint is a Telecommunications Carrier and has requested that BellSouth negotiate an Agreement with Sprint for the provision of Interconnection, Unbundled Network Elements, and Ancillary Functions as well as Telecommunications Services for resale, pursuant to the Telecommunications Act of 1996 (the "Act") and in conformance with BellSouth's duties under the Act; and

NOW THEREFORE, in consideration of the terms and agreements contained herein, BellSouth and Sprint mutually agree as follows:

event later than thirty (30) days after receipt of such assessment, proposed assessment or claim.

15.9 Mutual Cooperation. In any contest of a tax or fee by one Party, the other Party shall cooperate fully by providing records, testimony and such additional information or assistance as may reasonably be necessary to pursue the contest. Further, the other Party shall be reimbursed for any reasonable and necessary out-of-pocket copying and travel expenses incurred in assisting in such contest. Each Party agrees to indemnify and hold harmless the other Party from and against any losses, damages, claims, demands, suits, liabilities and expenses, including reasonable attorney's fees, that arise out of its failure to perform its obligations under this section.

16. Force Majeure

In the event performance of this Agreement, or any obligation hereunder, is either directly or indirectly prevented, restricted, or interfered with by reason of fire flood, earthquake or like acts of God, wars, revolution, riots, insurrections, explosion, terrorists acts, nuclear accidents, power blackouts, embargo, acts of the government in its sovereign capacity, labor difficulties, including without limitation, strikes, slowdowns, picketing, or boycotts, unavailability of equipment from vendor, or any other circumstances beyond the reasonable control and without the fault or negligence of the Party affected, the Party affected, upon giving prompt notice to the other Party, shall be excused from such performance on a day-to-day basis to the extent of such prevention, restriction, or interference (and the other Party shall likewise be excused from performance of its obligations on a day-to-day basis until the delay, restriction or interference has ceased); provided however, that the Party so affected shall use diligent efforts to avoid or remove such causes of non-performance and both Parties shall proceed whenever such causes are removed or cease.

17. Most Favored Nations (MFN)

17.1 BellSouth shall make available, pursuant to 47 USC § 252 and the FCC rules and regulations regarding such availability, to Sprint any interconnection, service, or network element provided under any other agreement filed and approved pursuant to 47 USC § 252. The Parties shall adopt all rates, terms and conditions concerning such other interconnection, service or network element and any other rates, terms and conditions that are interrelated or were negotiated in exchange for or in conjunction with the interconnection, service or network element being adopted. The adopted interconnection, service, or network element and agreement shall apply to the same states as such other agreement and for the identical term of such other agreement.

18. Modification of Agreement

IN WITNESS WHEREOF, the Parties have executed this Agreement in duplicate on the day and year written below.

BellSouth Telecommunications, Inc.

Signature on File
Signature

C. W. Boltz
Name

Managing Director
Title

11-6-01
Date

Sprint Communications Company Limited Partnership

Signature on File
Signature

W. Richard Morris
Name

Vice President-State External Affairs
Title

11-5-01
Date

BellSouth Telecommunications, Inc.

Signature on File
Signature

Randy Ham
Name

Managing Director
Title

11-6-01
Date

Sprint Spectrum L.P.

Signature on File
Signature

Anthony G. Krueck
Name

Vice President–Engineering & Network Design
Title

11-5-01
Date

BEFORE THE FLORIDA PUBLIC SERVICE COMMISSION

Petition by AT&T Communications of the Southern States, Inc. for arbitration of certain terms and conditions of a proposed agreement with BellSouth Telecommunications, Inc. pursuant to 47 U.S.C. Section 252.	)	Docket No. _____ Filed: 06/16/00

PETITION BY AT&T AND TCG FOR ARBITRATION UNDER THE TELECOMMUNICATIONS ACT OF 1996

AT&T Communications of the Southern States, Inc. ("AT&T") and TCG South Florida (collectively "AT&T") hereby request the Florida Public Service Commission (the "Commission") to arbitrate unresolved issues resulting from AT&T's negotiations with BellSouth Telecommunications, Inc. ("BellSouth") for the renewal of the parties' existing interconnection agreement (the "Initial Agreement"). In support, AT&T shows as follows:

1. This Petition includes: 1) AT&T's letter to BellSouth requesting negotiations (Attachment A); 2) a matrix of the disputed issues and the respective positions of each party on those issues (Attachment B); and 3) a proposed interconnection agreement between the parties, showing the disputed sections and language suggested by each party (the "Proposed Interconnection Agreement") (Attachment C).

FLORIDA PUBLIC SERVICE COMMISSION
DOCKET NO. 020919-TP EXHIBIT NO. 17
COMPANY/ WITNESS: AT&T/TCG Petition
DATE: 5-07-03

PARTIES

2. AT&T, a New York corporation, is authorized to provide local exchange service in the state of Florida. AT&T's business address is:

AT&T Communications of the Southern States, Inc.
101 N. Monroe Street, Suite 700
Tallahassee, Florida 32301

Copies of pleadings, notices and orders in this docket should be served upon Marsha Rule at the above address, and upon Virginia Tate at the following address:

AT&T Communications of the Southern States, Inc.
1200 Peachtree Street, N.W.
Suite 8100
Atlanta, Georgia 30309

3. AT&T Corp., the parent corporation of AT&T Communications of the Southern States, Inc., acquired Teleport Communications Group, Inc., the parent company of TCG South Florida, effective July 23, 1998.

4. BellSouth is a corporation organized and formed under the laws of the State of Georgia, having an office at 675 West Peachtree Street, Atlanta, Georgia 30375. BellSouth provides local exchange and other services within its franchised areas in Florida. BellSouth is a "Bell operating company" ("BOC") and an "incumbent local exchange carrier" ("ILEC") under the terms of the Telecommunications Act of 1996 (the "Act").[1]

---

[1] 47 U.S.C. §§ 153(35), 251(h).

JURISDICTION

5. This Commission has jurisdiction over this Petition pursuant to Section 252(b)(1) of the Act and Section 2.3 of the General Terms and Conditions of the Initial Agreement. Pursuant to the Act and the Initial Agreement, AT&T formally requested negotiations with BellSouth for the renewal of the Initial Agreement on January 13, 2000 (see Attachment A) and now files this Petition for resolution of disputed issues between the 135th and 160th days following such request. Pursuant to Section 252(b)(4)(C) of the Act, this Commission must resolve each issue set forth in the Petition and Response on or before October 13, 2000 (no later than nine months following January 13, 2000, the date on which BellSouth received AT&T's request for negotiation).

STATEMENT OF THE CASE

6. The Act imposes duties on BellSouth to enable alternative local exchange companies ("ALECs") to enter BellSouth's local telephone market. These duties include providing ALECs with the ability to interconnect with BellSouth's network at any technically feasible point and providing nondiscriminatory access to BellSouth's network. The Act mandates that ALECs may provide local exchange service through interconnection with BellSouth's facilities, through resale of BellSouth's services, or through access to BellSouth's unbundled network elements ("UNEs") at cost based rates. The Act's purpose is to ensure widespread local exchange competition for the benefit of consumers.

7. Despite the Act's clear intent, it has been approximately four years since its passage and there still is little competition in Florida's local telephone market. Widespread local exchange competition cannot develop until AT&T and other ALECs are able to obtain interconnection terms with BellSouth which fully comply with Sections 251 and 252 of the Act. Only when ALECs are assured of nondiscriminatory access will they be able to commit the substantial resources necessary for entering the local services market on a broad scale. Accordingly, if competition is to flourish, then this Commission must require BellSouth to provide ALECs, such as AT&T, with interconnection at fair and reasonable rates, terms and conditions.

STANDARD OF REVIEW

8. This arbitration must be resolved by the standards established in Sections 251 and 252 of the Act and the effective rules adopted by the FCC in the *Local Competition Order*.[2] Section 252(c) of the Act requires a state commission resolving open issues through arbitration to:

> (1) ensure that such resolution and conditions meet the requirements of section 251, including the regulations prescribed by the [FCC] pursuant to section 251; [and]
>
> (2) establish any rates for interconnection, services, or network elements according to subsection (d) [of section 252].[3]

---

[2] See 47 U.S.C. §§ 251, 252; First Report and Order, Implementation of the Local Competition Provisions of the Telecommunications Act of 1996, CC Docket No. 96-98, 11 FCC Rcd 13042 (1996) (hereinafter *Local Competition Order*).

[3] 47 U.S.C. § 252(c)(1)-(2).

9. Section 251 of the Act provides the minimum standards for BellSouth in negotiating and providing interconnection to ALECs. Those standards include unbundled access to the local exchange carriers' facilities and information and to the network's functions and services on a nondiscriminatory basis. BellSouth must provide interconnection with ALECs that is at least equal in quality to that BellSouth provides to itself and "on rates, terms, and conditions that are just, reasonable, and nondiscriminatory."[4] This section further requires that the local exchange carrier must provide nondiscriminatory access to UNEs at any technically feasible point, individually and in combinations, and at cost based rates.[5]

THE NEGOTIATIONS

10. In 1996, AT&T petitioned this Commission pursuant to Sections 251 and 252 of the Act to arbitrate certain issues arising out of the negotiations between AT&T and BellSouth for the initial interconnection agreement between the parties. On April 29, 1998, this Commission issued Order No. PSC-98-0604-TP in Docket No. 960833-TP (the "*Final Order on Arbitration*") resolving the issues presented. The parties incorporated this decision into the Initial Agreement[6]. The Initial Agreement is a three-year agreement

---

[4] 47 U.S.C. § 251(c)(2)(D).

[5] 47 U.S.C. § 251(c)(3).

[6] The parties also incorporated into the Initial Agreement certain language resulting from the Commission's Orders Nos. PSC-98-0844-FOF-TP, PSC-98-0844B-FOF-TP and PSC-99-0038-FOF-TP in Docket No. 960883-TP and Orders Nos. PSC-98-0810-FOF-TP, PSC-99-1989-FOF-TP and PSC-99-2461-FOF-TP in Docket No. 971140-TP.

that expires on June 10, 2000. Upon expiration of the Initial Agreement, pursuant to its terms, the parties will continue to operate under the Agreement's terms.[7]

11. Pursuant to the Act and Section 2 of the General Terms and Conditions of the Initial Agreement, AT&T requested to renegotiate the Initial Agreement with BellSouth by letter on January 13, 2000. Prior to and since the request was sent, AT&T's negotiations team met almost weekly with BellSouth either face to face at one of the parties' offices or through conference calls. In support of the negotiations and their respective positions, the parties have exchanged drafts of proposed terms and conditions.

12. At the outset of these negotiations, both BellSouth and AT&T delivered their proposed new agreements to each other. To expedite the negotiation process and to narrow the issues to be negotiated, however, AT&T agreed to use either the Initial Agreement or BellSouth's proposed model agreement as the basis for the formation of the new agreement. Throughout the process, the parties have exchanged drafts setting forth their respective positions on a given issue. Using the Initial Agreement or the BellSouth model agreement as the "base" document, these proposals have been melded into a "hybrid" version of the Initial Agreement, which contains much of the Initial Agreement, but also requested changes agreed to by the parties.

---

[7] Specifically, under Section 2 of the General Terms and Conditions of the 1996 Agreement, the parties are governed by its terms until the effective date of any subsequent agreement.

13. AT&T has attached to this Petition, as Attachment C, a copy of the Proposed Interconnection Agreement which represents what AT&T believes is the most recent language from the negotiations as of the week of June 12, 2000. In the body of the Agreement, AT&T has adopted the following "legend":

(i) Where the language has been finalized and agreed to by the parties, the language is in regular type print with no "bold" or other designation. AT&T is not requesting that the Commission take any action with respect to this language.

(ii) Where a certain section in the Proposed Interconnection Agreement has the designation of "**OPEN**", the language has not been finally resolved by the parties during the negotiations, but AT&T is confident that the parties will reach agreement with respect to the section. AT&T and BellSouth will continue to negotiate "OPEN" items throughout the arbitration process. As a result, AT&T is not requesting that the Commission take any action at this time with respect to "OPEN" items. In the event that an "OPEN" issue is not resolved by the parties, then AT&T reserves the right to amend its Petition to include such issues.

(iii) Where sections are labeled "**DISAGREE**", the parties have been unable to negotiate language, and the positions of the parties are far enough apart that it appears that no agreement will be reached absent a decision by the Commission. For each of these sections, AT&T also has inserted into the Proposed Interconnection Agreement the final proposed language from both parties as of the week of June 12, 2000. Further, a description of the relevant

issues related to each of these sections, as well as AT&T's representation as to the parties' latest position on these issues, is contained in the matrix attached to this Petition as Attachment B[8] and incorporated herein.[9] As with the "OPEN" items, AT&T and BellSouth also will continue to negotiate "DISAGREE" items throughout the arbitration process.

ISSUES IN DISPUTE

14. As is apparent from the attached issues matrix, AT&T and BellSouth have reached agreement on a substantial number of issues. However, there are issues that remain in dispute, some of which are similar to those presented in 1996. AT&T is seeking arbitration on these issues because either: (i) the resolution achieved in 1996 is no longer practical given the changes in the industry, or (ii) BellSouth has failed to adhere to previously ordered obligations, forcing AT&T to once again seek resolution of previously ordered language. Nonetheless, the issues presented for this second round of negotiations are narrow and specific.[10]

---

[8] The parties have not agreed to use specific language regarding the issues and positions of the parties.

[9] AT&T has not submitted a copy of its model agreement as an attachment to this Petition but reserves the right to do so to the extent BellSouth or the Commission is unclear as to what AT&T's initial position is on any given issue.

[10] To the extent BellSouth disputes any of the issues AT&T believes have been resolved, AT&T includes those issues for resolution in this arbitration and will supplement this Petition and provide additional relevant documents, as necessary.

REQUESTED COMMISSION ACTIONS

15. AT&T respectfully requests that the Commission take the following actions as a result of this Petition:

A. Issue a procedural order to establish a schedule for all forms of discovery (depositions, interrogatories, data requests, and requests for admission), direct testimony, rebuttal testimony, prehearing conference, hearing, and post hearing briefs;

B. Arbitrate the unresolved issues between AT&T and BellSouth, as set forth in Attachment B, within the timetable specified in the Act; and

C. Take such other and further actions as the Commission deems appropriate.

Respectfully submitted,

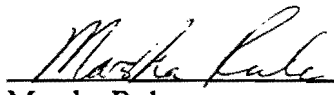

Marsha Rule
101 North Monroe Street
Suite 700
Tallahassee, FL 32301
Telephone: (850) 425-6365
Facsimile: (850) 425-6361

Attorney for
AT&T COMMUNICATIONS OF
THE SOUTHERN STATES, INC.
and TCG SOUTH FLORIDA

CERTIFICATE OF SERVICE

I HEREBY CERTIFY that a true and correct copy of the foregoing Petition was furnished via Hand Delivery to the following parties of record on this 16th day of June, 2000:

Nancy B. White
c/o Nancy Sims
BellSouth Telecommunications, Inc.
150 S. Monroe Street, Suite 400
Tallahassee, FL 32301-1556

Doug Lackey
BellSouth Telecommunications, Inc.
675 West Peachtree Street
Room 4300
Atlanta, GA 30375-0001

ATTORNEY

ATTACHMENT B

Florida
Issues for Arbitration between AT&T and BellSouth

	Issue	AT&T Position	BellSouth Position*
1.	Should calls to Internet service providers be treated as local traffic for the purposes of reciprocal compensation?	ISP calls should be treated as local traffic for purposes of reciprocal compensation. AT&T still incurs the cost of the ISP Traffic over its network. Additionally, such calls are treated as local under BellSouth's tariffs and the FCC has treated ISP Traffic as intrastate for jurisdictional separation purposes.	No. The FCC has definitively determined that ISP Traffic is interstate in nature. Therefore, such Traffic should not be treated as local for purposes of reciprocal compensation. The parties should track the minutes of ISP Traffic exchanged and true up the amount of compensation owed, if any, based on an effective rule promulgated by the FCC.
2.	What are the appropriate performance measurements and enforcement mechanisms that BellSouth should implement?	For AT&T to ensure its customers receive service equal in quality to that received by BellSouth customers, BellSouth must establish that it offers non-discriminatory support for total service resale, use of unbundled network elements (UNE's), and access to OSS. BellSouth should be required to provide an effective performance measurement methodology that contains: - A comprehensive set of comparative measurements that provides for disaggregation of its data to permit meaningful comparisons and full disclosure. - Business rules and calculations which reveal true performance and customer experiences. - A sound methodology for establishing benchmarks and designating appropriate retail analogs. - Statistical procedures that balance the possibility of concluding BellSouth favoritism exists when it does not with concluding there is no BellSouth favoritism when there is. - AT&T access to all the raw	The Service Quality Measurements proposed by BellSouth incorporate all of the measurements and reporting intervals adopted by other commissions within the BellSouth region. These measurements, as well as the business rules utilized to calculate the measurements, represent a comprehensive look at the service provided to telecommunications carriers. BellSouth provides access to the raw data utilized to calculate the measurements and has worked hand in hand with AT&T and other telecommunications carriers in the development of an appropriate statistical methodology. BellSouth does not believe that the issue of appropriate, if any, enforcement mechanisms is an appropriate issue for arbitration and resolution by the FPSC. Without waiving its right to assert its legal position, BellSouth has voluntarily proposed enforcement mechanisms for inclusion in the AT&T/BellSouth Interconnection Agreement. The proposed enforcement mechanisms include the key, outcome oriented service quality measures required by state

*The position stated in this column is based on BellSouth's position stated in its Responses to AT&T's Petition for Arbitration filed in Georgia, Tennesee, Mississippi and North Carolina.

		data that BellSouth uses for its ALEC performance reporting. Further, BellSouth should adopt an appropriate system of self-enforcing consequences to assure that the competitive local telecommunications markets envisioned by the 1996 Act will be able to develop and survive. The consequences must provide BellSouth with incentives sufficient to prevent BellSouth from inhibiting competition through discriminatory treatment of ALECs. Such consequences must be immediately imposed upon a demonstration of poor BellSouth performance. A self-enforcing system of consequences is needed to assure that BellSouth has appropriate incentives to comply, on an ongoing basis, with its Section 251 obligations to provide ALECs with non-discriminatory support regardless of whether a section 271 application has been made or approved. AT&T proposes the AT&T Performance Incentive Plan as the enforcement mechanism.	commissions in BellSouth's region and include either benchmarks or retail analogs as standards. The mechanisms are designed to prevent BellSouth from backsliding on delivery of service to AT&T once BellSouth has attained interLATA authority from the FCC. The remedies proposed are meaningful remedies designed to be, if applied, of significant impact to BellSouth.
3.	Should BellSouth be required to adopt validation and audit requirements which will enable AT&T to assure the accuracy and reliability of the performance data BellSouth provides to AT&T, and upon which the FPSC will ultimately rely when drawing conclusions about whether BellSouth meets its obligations under the Act?	BellSouth should be required to have an independent audit conducted of its performance measurement systems, paid for by BellSouth. Additional annual audits should be conducted and paid for 50% by BellSouth and 50% among the ALECs participating in the audit. Additionally, AT&T may request additional audits when performance measures are changed or added, to be paid for by BellSouth. Additionally, audits of individual measures should be conducted. The cost of a "mini-audit" shall be paid by AT&T unless the audit determines that BellSouth is not	BellSouth will agree to undergo a comprehensive audit of the aggregate level reports for both BellSouth and the ALECs for each of the next five (5) years (2000-2005), to be conducted by an independent third party. The results of that audit will be made available to all the parties subject to proper safeguards to protect proprietary information. This aggregate level audit includes the following specifications: (1) the cost shall be borne 50% by BellSouth and 50% by the ALECs; (2) the independent third party auditor shall be selected with input from BellSouth, the FPSC and the ALECs; and (3) BellSouth, the

		in compliance with the terms of the Agreement.	FPSC and the ALECs shall jointly determine the scope of the audit. More frequent audits are not reasonable in view of the tremendous number of ALEC interconnection agreements into which BellSouth has entered.
4.	What does "currently combines" mean as that phrase is used in 57 C.F.R. §51.315(b)?	The Commission should allow AT&T to provide telecommunications services to any customer using any combination of elements that BellSouth routinely combines in its own network and to purchase such combinations at TELRIC rates. BellSouth should not be allowed to restrict AT&T from purchasing and using such combinations to only provide service to customers who currently receive retail service by means of the combined elements. This is the only interpretation of the term "currently combines" that is consistent with the nondiscrimination policy of the Act and which will promote rapid growth in competition in the local telephone market.	In the FCC's *Third Report and Order*, the FCC confirmed that BellSouth presently has no obligation to combine network elements for ALECs when those elements are not currently combined in BellSouth's network. The FCC rules, 51.315(c)-(f), that purported to require incumbents to combine unbundled network elements were vacated by the Eighth Circuit Court of Appeals and were not appealed to or reinstated by the Supreme Court. The question of whether those rules should be reinstated is pending before the Eighth Circuit, and the FCC explicitly declined to revisit those rules at this time. *Third Report and Order*, ¶ 481. The FCC also confirmed that when unbundled network elements, as defined by the FCC, are currently combined in BellSouth's network, BellSouth cannot separate those elements except upon request. 47 C.F.R. § 51.315(b). For example, when a loop and a port are currently combined by BellSouth to serve a particular customer, that combination of elements must be made available to ALECs. According to the FCC, requesting carriers are entitled to obtain such combinations "at unbundled network element prices." *Id.* at ¶ 480. There is no legal basis for the FPSC to adopt an expansive view of "currently combined" so

			as to obligate BellSouth to combine elements for ALECs. As the FCC made clear in its *Third Report and Order*, Rule 51.315(b) applies to elements that are "in fact" combined. *See id.* ¶ 480 ("To the extent an unbundled loop is in fact connected to unbundled dedicated transport, the statute and our rule 51.315(b) require the incumbent to provide such elements to requesting carriers in combined form"). The FCC declined to adopt the definition of "currently combined," that would include all elements "ordinarily combined" in the incumbent's network. *Id.* (declining to "interpret rule 51.315(b) as requiring incumbents to combine unbundled network elements that are 'ordinarily combined' ...").
5.	Should BellSouth be permitted to charge AT&T a "glue charge" when BellSouth combines network elements?	BellSouth should not impose any additional charge on AT&T for any combination of network elements above the TELRIC cost of the combination.	See BellSouth's response to Issue 4, which is incorporated herein by reference as fully as if set out in its entirety.
6.	Under what rates, terms, and conditions may AT&T purchase network elements or combinations to replace services currently purchased from BellSouth tariffs? (UNEs, Attachment 2, Section 2.11)	Pursuant to FCC Orders, AT&T is permitted to purchase network elements and combinations to replace services currently purchased from BellSouth tariffs. The price to purchase network elements and combinations in such situations should be the TELRIC cost to do a record change in BellSouth's OSS, plus the recurring price of the appropriate network elements or combinations. BellSouth should not be permitted to place obstacles in the way of AT&T's ability to convert such services to network elements and combinations as easily and seamlessly as possible. Appropriate terms and conditions	Without waiver of its ability to avail itself of any available legal remedies, and in conformance to the guidelines set forth by the FCC in CC Docket No. 96-98 UNE Remand Orders dated Nov. 5, 1999 and Nov. 24, 1999, BellSouth will convert services currently purchased on a month to month basis by AT&T, or a BellSouth end user changing its service provider to AT&T, to the extent possible on a mechanized basis at a record change charge. As to services provided to AT&T or to a BellSouth end user changing its service provider to AT&T under a volume and term agreement or other contract basis, BellSouth

		must also be ordered to ensure that AT&T is able to replace services with network elements/combinations of network elements.	will convert the services to the UNEs ordered by AT&T upon AT&T's payment of the appropriate early termination liabilities set forth in the volume and term agreement or contract.
7.	How should AT&T and BellSouth interconnect their networks in order to originate and complete calls to end-users? (Local Interconnection, Attachment 3)	AT&T and BellSouth should interconnect on an equitable basis, which is hierarchically equivalent, and not maintain the imbalanced situation where AT&T incurs the expense of connecting throughout BellSouth's network, while BellSouth incurs the much lower cost of connecting at the edge of AT&T's network. AT&T's proposal also avoids use of limited collocation space that is better used for other purposes such as interconnection to UNE loops and advanced services. AT&T's proposal requires the two parties to work out a transition plan to "groom" the two networks.	BellSouth offers interconnection in compliance with the requirements of the FCC rules and regulations as well as any state statute or regulation. Interconnection can be through delivery of facilities to a collocation or fiber meet arrangement or through the lease of facilities. Interconnection for AT&T originated Traffic must be accomplished through at least one interface within the BellSouth LATA and may be at an access tandem or local tandem. BellSouth, at its option, may designate one or more interfaces on its network for the delivery of its originating traffic to AT&T. BellSouth should not be required to incur additional unnecessary cost as a result of the selection of interconnection points by AT&T. If AT&T requires BellSouth to haul BellSouth originating traffic from the originating local calling area to a point of interconnection outside that local calling area, AT&T should compensate BellSouth for its transport costs.
8.	What terms and conditions, and what separate rates if any, should apply for AT&T to gain access to and use BellSouth facilities to serve multi-unit installations?	BellSouth should cooperate with AT&T, upon request, in establishing a single point of interconnection on a case-by-case basis at multiunit installations. Where such points of interconnection do not exist, BellSouth should construct such single points of interconnection, and AT&T should be charged no more than its fair share, as one service provider using this facility, of the forward-looking price. The single point of	Without waiver of its ability to avail itself of any available legal remedies, BellSouth will perform in conformance with the guidelines of 47 CFR §51.319(a)(2)(E) as set forth by the FCC in CC Docket No. 96-98 UNE Remand Order.

FLORIDA
Issues for Arbitration between AT&T and BellSouth

		interconnection should be fully accessible by AT&T technicians without the necessity of having a BellSouth technician present.	
9.	Should BellSouth provide local circuit switching at UNE rates to allow AT&T to serve the first three lines provided to a customer located in Density Zone 1 as determined by NECA Tariff No. 4 in effect on January 1, 1999 ("Density Zone 1")?	Yes. Customers should be allowed to freely choose their local service provider regardless of the number of lines that customer purchases. AT&T is entitled to purchase local circuit switching at UNE rates to provide service to customers in Density Zone 1 for the first, second, and third lines purchased by such customers even if those customers have four lines or more.	No. If an end user in Density Zone 1 has four or more lines, AT&T is not entitled to purchase local circuit switching from BellSouth at UNE rates to serve that end user.
10.	Should BellSouth preclude AT&T from purchasing local circuit switching from BellSouth at UNE rates when a Density Zone 1 existing AT&T customer with 1-3 lines increases its lines to 4 or more? (UNEs, Attachment 2, Section 6.3.1.3 and 6.3.1.4)	No. In a level competitive environment, customer services and rates should not be negatively impacted by BellSouth's election to increase AT&T's costs of providing local service simply because the customer adds a fourth line to its location.	Yes. Once an end user has four lines to the location, AT&T is not entitled to purchase local circuit switching at UNE rates from BellSouth to provide any lines to that end user, regardless of whether it is line 1, 2, 3, or 4.
11.	Should BellSouth be allowed to aggregate lines provided to multiple locations of a single customer to restrict AT&T's ability to purchase local circuit switching at UNE rates to serve any of the lines of that customer? (UNEs, Attachment 2, Section 6.3.1.3 and 6.3.1.4)	No. The total number of lines served to all of the customers' locations should not be aggregated. If a customer, for example, has several locations, each served by 3 lines or less, AT&T should be entitled to purchase local circuit switching from BellSouth to serve each of the locations.	Yes. All of the lines provided to a customer end-user, including those at every end-user location (where an end-user has multiple locations), can be aggregated to restrict BellSouth's obligation to provide circuit switching at UNE rates.
12.	Should AT&T be permitted to charge tandem rate elements when its switch serves a geographic area comparable to that served by BellSouth's tandem switch? (Local Interconnection, Attachment 3, Section	Yes. When AT&T's switches serve a geographic area comparable to that served by BellSouth's tandem switch, then AT&T should be permitted to charge tandem rate elements.	AT&T must demonstrate to the FPSC that (1) its switch serves a comparable geographic area and (2) the switch performs functions similar to those performed by BellSouth's tandem switch. Simply being capable of serving a comparable geographic area or of performing tandem switching

	1.3)		functions is not sufficient evidence.
13.	What are the appropriate means for BellSouth to provide unbundled local loops for provision of DSL service when such loops are provisioned on digital loop carrier facilities? (UNEs, Attachment 2, Section 3.11.2)	When existing loops are provisioned on digital loop carrier facilities, and AT&T requests such loops in order to provide xDSL service, BellSouth should provide AT&T with access to other loops or subloops so that AT&T may provide xDSL service to a customer.	In the case where an existing loop is provisioned on a BellSouth digital loop carrier facility, and the existing loop cannot provide xDSL capable service, BellSouth is not required to provide AT&T alternative loops to allow AT&T to provide the service over that loop. AT&T would be required to purchase an xDSL capable loop through a separate and distinct ordering process.
14.	What coordinated cut-over process should be implemented to ensure accurate, reliable and timely cut-overs when a customer changes local service from BellSouth to AT&T? (UNEs, Attachment 2, Section 3.8 et seq.)	The coordinated cut-over process proposed by AT&T should be implemented to ensure accurate, reliable, and timely cut-overs. BellSouth's proposed process does not ensure that customers switching from BellSouth to AT&T receive the same treatment that BellSouth customers receive. Moreover, BellSouth does not follow its own process.	The coordinated cut-over process proposed by BellSouth does ensure accurate, reliable and timely cut-overs. BellSouth's current SQMs measure BellSouth's performance in this area and sufficiently demonstrate that AT&T customers switching from BellSouth receive non-discriminatory treatment.
15.	Should AT&T local calls that use BellSouth's switching UNE be subject to "bill and keep" compensation arrangement, even though reciprocal compensation will be paid for terminating local calls not using BellSouth's UNE switch? (Local Interconnection, Attachment 3, Section 4.10; Billing & Recording, Attachment 6, Section 2.1.6; Exhibit E and Attachment 3, Section 4.10)	Due to the complexities and expense of recording and billing for reciprocal compensation on UNE-switched calls, AT&T believes that bill and keep should be used for local calls originated from and terminated to AT&T when it uses BellSouth's UNE switching. Other telecommunication carriers who originate or terminate calls to AT&T end-users served by UNE switching will be unable to determine that such calls went to AT&T as opposed to BellSouth. All call records will continue to look like they were made to BellSouth.	When the end user of a facilities-based ALEC calls an AT&T local end user where AT&T is not providing its own facilities, but rather is using a UNE-P purchased from BellSouth to terminate the call, BellSouth should be permitted to charge AT&T for the UNEs AT&T uses, and AT&T should then charge the originating ALEC reciprocal compensation for terminating the call for the ALEC (or enter into a bill and keep arrangement with the ALEC). When AT&T terminates a call using BellSouth's local switching, BellSouth will provide the necessary recorded information to enable AT&T to bill the other carriers the charges those carriers have incurred. When AT&T leases circuit switching from BellSouth AT&T is entitled to all revenues

			associated with that functions, including the revenues associated with terminating calls for other carriers and is obligated in turn to pay BellSouth for the network elements used.
16.	What is the appropriate treatment of outbound voice calls over Internet protocol ("IP") telephony, as it pertains to reciprocal compensation? (Local Interconnection, Attachment 3, Section 6.1.9)	Until the FCC issues rules on how IP Traffic is to be treated, no restrictions should be imposed. Further, there is no way to measure and record such Traffic as requested by BellSouth. In any event, this is not a proper subject for negotiation in an interconnection agreement.	IP telephony is utilized in a manner consistent with traditional long-distance calling. Therefore, due to the increasing use of IP technology to transport voice long distance Traffic, it is important to specify in the Agreement that Voice over the Internet Protocol Traffic is switched access Traffic and not local Traffic.
17.	In calculating Percent Local Usage (PLU) for purposes of reciprocal compensation, should AT&T be allowed to report the Traffic on a monthly, rather than quarterly, basis? (Local Interconnection, Attachment 3, Section 6.1.11)	Yes. BellSouth should be required to continue its current practice of calculating the PLU on a monthly basis. As AT&T enters the local market, and local usage increases, it remains necessary that BellSouth not change the current practice which has been adequate to this point. BellSouth proposes changing to a quarterly basis, which AT&T opposes.	BellSouth offered to accept PLU reporting on an otherwise than quarterly basis (i.e. monthly) for a period of 12 months or until the PLU stabilizes when AT&T: (1) gains a large customer whose addition would have an impact on the PLU; (2) opens a new calling area; or (3) begins marketing in a new area. Otherwise, PLU would be reported quarterly, which is consistent with industry practice.
18.	What are the appropriate intervals for the delivery of collocation space to AT&T? (Collocation, Attachment 4, Section 6.4). (AT&T anticipates that this issue will be settled based on the FPSC's Order on Collocation in Docket Nos. 981834-TP and 990321-TP)	FCC rules require that BellSouth provide collocation within intervals no greater than the best practice intervals of other ILECS. Accordingly, BellSouth should provide collocation within the following intervals: (1) virtual and cageless: 60 calendar days; and (2) Physical (caged): 30 calendar days if AT&T does the construction; and 90 calendar days if BellSouth does the construction. In the event of unforeseen circumstances, BellSouth should apply to the FPSC for suspension of or relief from the intervals.	BellSouth has proposed an interval of no greater than 100 calendar days for the provision of physical collocation arrangements under ordinary conditions. Such a proposal is reasonable and necessary.
19.	When AT&T and BellSouth have adjoining facilities in a	Yes. When BellSouth and AT&T facilities are in close proximity, in order to achieve	No. AT&T's proposal has the effect of expanding the definition of premises beyond

	building outside BellSouth's central office, should AT&T be able to purchase cross connect facilities to connect to BellSouth or other ALEC networks without having to collocate in BellSouth's portion of the building? (Collocation, Attachment 4, Section 1.6) (AT&T anticipates that this issue will be settled based on the FPSC's Order on Collocation in Docket Nos. 981834-TP and 990321-TP.)	network efficiency, AT&T should be able to cross connect its network directly from its space to BellSouth's space without having to purchase collocation space from BellSouth.	that which is required by the FCC regulations or that which is necessary. AT&T simply wishes to take advantage of its former corporate ownership of BellSouth. BellSouth's agreement to AT&T's terms would cause BellSouth to provide AT&T with more favorable treatment than other new entrants.
20.	Is conducting a statewide investigation of criminal history records for each AT&T employee or agent being considered to work on a BellSouth premises a security measure that BellSouth may impose on AT&T? (Collocation, Attachment 4, Section 11.1, 11.2, 11.4, 11.5)	No. These requirements are unreasonable and are inconsistent with the examples of measures found by the FCC to be reasonable, e.g. ID badges, security cameras, cabinet enclosures, and separate central building entrances. Such requirements are excessive, increasing collocation costs without providing additional protection to BellSouth. Moreover, such requirements are discriminatory as applied to AT&T. Further, AT&T is willing to indemnify BellSouth, on a reciprocal basis, for any bodily injury or property damage caused by AT&T's employees or agents.	Yes. BellSouth performs criminal background checks on its employees prior to hiring and as such can require AT&T to do the same in order for AT&T to have unescorted access to the central offices and other premises that house the public switched network. Such security requirements are reasonable in light of the assets being protected as well as the number of new entrants and other telecommunications carriers relying on the integrity and reliability of BellSouth's network. AT&T's offer to indemnify BellSouth for bodily injury or property damage is not sufficient in light of the asset at risk.
21.	Unless otherwise specified, where Attachment 4 regarding collocation refers to days, should those days be calendar days or business days? (Collocation, Attachment 4) (AT&T anticipates that this issue will be settled	Days should be calendar days. Business day intervals are inherently longer and less predictable than calendar day intervals, thereby delaying delivery of collocation space within a reasonable timeframe.	Unless otherwise specified (for example, see BellSouth's response to Issue 18, days should be business days. Given the nature and complexity of the tasks to be completed, business days are reasonable.

	based on the FPSC's Order on Collocation in Docket Nos. 981834-TP and 990321-TP.)		
22.	What are the appropriate recurring and non recurring charges for the collocation items for which charges have not been established or are not TELRIC compliant as listed in Exhibit A to Collocation, Attachment 4 of AT&T's Proposed Interconnection Agreement. (Collocation, Attachment 4 and Exhibit A)	The FCC's TELRIC pricing rules require that BellSouth charge no more for any collocation than the TELRIC cost of collocation.	The appropriate rate is a cost-based rate calculated pursuant to a final FCC-compliant methodology.
23.	Has BellSouth provided sufficient customized routing in accordance with State and Federal law to allow it to avoid providing Operator Services/Directory Assistance ("OS/DA") as a UNE?	No. BellSouth does not provide AT&T adequate customized routing. BellSouth has not provided sufficient information on its untested AIN solution, including rates. If BellSouth's proposal is line class codes ("LCC's"), this solution may not be viable in every central office. Thus, until these methods are proven viable, AT&T may purchase OS/DA as an unbundled network element.	Yes. BellSouth has available both an AIN solution for customized routing as well as the LCC solution that was advocated by AT&T during the last round of arbitrations. AT&T participated in testing BellSouth's AIN customized routing solution.
24.	Should BellSouth be required to electronically process and provision customer specific orders for OS/DA if AT&T orders an unbranded or AT&T branded platform? (Attachment 7, Sections 3.20-3.24)	Yes. BellSouth should process and provision AT&T's customer specific orders at parity with BellSouth's processing and provisioning of its own customers orders.	See BellSouth's response to Issue 23, which is incorporated herein by reference as fully as if set out in its entirety. However, should the Commission resolve Issue 23 in AT&T's favor, BellSouth will only provide electronic processing and provisioning of AT&T's OS/DA orders to a BellSouth branded platform. Orders for an unbranded or AT&T branded platform must be processed manually. Any proposed electronic ordering methodology should be handled through the

			EICCP, not through an arbitration proceeding.
25.	What procedure should be established for AT&T to obtain loop-port combinations (UNE-P) using both Infrastructure and Customer Specific Provisioning? (Attachment 7, Sections 3.20 – 3.24)	BellSouth should accept from AT&T two types of orders, 1) an Infrastructure Provisioning Order and 2) a Customer Specific Provisioning Order. The Infrastructure Provisioning Order (which consists of an Infrastructure Footprint Form and an Operator Services and Directory Assistance Questionnaire) notifies BellSouth of the common use of Network Elements and Combinations that AT&T will require geographically by End Office, Rate Center, LATA or State. The Footprint Order should be acknowledged within 24 hours and responded to within 5 business days thereafter. The Customer Specific Provisioning Order should be the LSR. LSRs for UNE-P should be received electronically, provided with ordering flow-thorough and provisioned at parity with BellSouth retail. Electronic LSRs with flow through ordering should be available for orders using either an unbranded or an AT&T branded platform.	BellSouth has proposed a procedure whereby AT&T can order loop/port combinations using BellSouth OS/DA platform and AT&T branding. BellSouth is not opposed to AT&T making a one-time designation to BellSouth to have all of AT&T's end user calls routed to the appropriate OS/DA platform. AT&T, however, refuses to make a single designation and seeks instead a variety of OS/DA routing plans. Therefore, AT&T should be required to populate the appropriate Line Class Code on the LSR submitted to the LCSC. If AT&T decided upon, and communicated, a single OS/DA routing plan, then BellSouth could determine the appropriate Line Class Code and AT&T would not be required to provide such code on the LSR. AT&T will not, however, make such a designation.
26.	May the Interconnection Agreement contain conditions on the purchase of any BellSouth exchange?	The rates, terms, and conditions of this Agreement should govern the relationship between AT&T and the third party purchaser. BellSouth should not be permitted to remove the benefits of competition from a territory by selling it to another party that may assert a rural exemption or undermine AT&T's investment in competition by changing the rules. Further, AT&T should not be faced with the uncertainty of negotiating a completely new set of terms and conditions with another provider who purchases a BellSouth local exchange. Similarly, the FPSC should not be	The contract language proposed by AT&T is unduly burdensome on BellSouth and any prospective purchaser of a BellSouth exchange. The requirements of the Act, specifically 47 USC §§251 (h), should apply.

FLORIDA
Issues for Arbitration between AT&T and BellSouth

		required to review new sets of terms and conditions each time there is a sale of a local exchange.	
27.	Should the Commission or a third party commercial arbitrator resolve disputes under the Interconnection Agreement?	More issues will arise now that AT&T is entering the market and will need to be resolved quickly. These issues will be more business oriented and less policy oriented, and thus, more appropriately handled by commercial arbitrators. The parties should continue to have the right to resolve operational issues in a commercial forum on an expedited basis; thereby, limiting the customer-affecting impact of any such disputes.	BellSouth has had experience with commercial arbitration in the resolution of disputes under interconnection agreements negotiated pursuant to 47 USC §252 and has found such arbitration to be expensive and unduly lengthy in nature. The Eighth Circuit Court of Appeals in *Iowa Utilities Board* ruled that the FPSC is charged with the power to resolve disputes relating to interconnection agreements and BellSouth should not be forced to waive its right to seek resolution of such issues before the FPSC.
28.	What is the proper timeframe for either party to render bills for overdue charges? (Billing & Recording, Attachment 6, Section 1.2.3)	BellSouth should be required to continue its current practice of not rendering bills for charges more than one year old. BellSouth does not render bills to its own retail customers for charges more than one year old, and BellSouth should not bill AT&T, as a wholesale customer, any differently.	BellSouth should not be required by contract to waive its statutory right to collect charges for services provided but for which payment has not been received at any point during the applicable statute of limitations. Of course, such time period would also extend to AT&T's right to complain about a billing.
29.	What are the proper parameters sufficient to prevent fraudulent billing for reciprocal compensation? (Local Interconnection, Attachment 3, Section 6.1.2)	Attachment 3, Section 6.1.2, which is the language currently in place, sufficiently and adequately defines interconnection; thereby, prohibiting the fraudulent billing for reciprocal compensation. In the event that a contract term is breached, the proper recourse is Dispute Resolution.	The current Agreement does not adequately address the issues brought to light by the conduct of some new entrants in the marketplace and because of 47 USC §252(i), BellSouth must protect itself from such conduct and the language proposed by BellSouth is reasonable.
30.	Should the Change Control Process be sufficiently comprehensive to ensure that there are processes to handle, at a minimum the following situations: (OSS, Attachment 7, Exhibit A)	Yes. Change Control should apply to the entire range of transactions required between AT&T and BellSouth in order for AT&T to utilize Services and Elements. Both electronic and manual interfaces and processes are required to establish and maintain a business relationship with BellSouth and conduct day-to-day business transactions. A comprehensive Change Control	The terms and conditions of the I-CCP, as well as the subjects to which it should apply, should be negotiated between the I-CCP committee members and cannot be properly arbitrated in a proceeding that involves only BellSouth and AT&T. Subject to this, BellSouth will respond to the individual items AT&T has identified through separate responses given below. To the

		Process should provide "cradle to grave" coverage of the life cycle of an interface or process, and its supporting documentation (such as specifications, business rules, methods, and procedures). Thus, implementation of new interfaces, management of interfaces in production (including defect correction), and the retirement of interfaces should be addressed. Change Control should provide a normal process, an exception process, an escalation process, and a dispute resolution process with ultimate recourse to the Commission, mediation, or court adjudication. Additionally, a process by which the Change Control Process can be changed should be specified. The existing Electronic Interface Change Control Process (EICCP) and the Interim Change Control Process (I-CCP) BellSouth has proposed are not comprehensive. AT&T's proposal and the existing EICCP/I-CCP coverage are compared below.	extent such issues are arbitrated, the current I-CCP is more than adequate to serve the needs of the ALEC community and address AT&T's concerns.

		Situation	AT&T Proposal	EICCP/I-CCP AT&T's View	EICCP/I-CCP BellSouth's View
		a) introduction of new electronic interfaces?	Yes.	No.	This subpart is addressed in the I-CCP today.
		b) retirement of existing interfaces?	Yes.	No.	This subpart is addressed in the I-CCP today.
		c) exceptions to the process?	Yes.	No.	This subpart is addressed in the I-CCP today.
		d) documentation, including training?	Yes.	BellSouth may agree in theory, but has implemented all documentation changes unilaterally and outside the I-CCP.	BellSouth may agree in theory, but has implemented all documentation changes unilaterally and outside the EICCP.

FLORIDA
Issues for Arbitration between AT&T and BellSouth

		Situation	AT&T Proposal	EICCP/I-CCP AT&T's View	EICCP/I-CCP BellSouth's View
		e) defect correction?	Yes.	Treatment of defects is being implemented into the I-CCP currently.	Defects are being implemented into the EICCP currently.
		f) emergency changes (defect correction)?	Yes.	BellSouth may agree in theory, but defects have been excluded from I-CCP.	The Type 1 system outages are defined in the interim change control process but are handled through the EC Support Help Desk.
		g) an eight step cycle, repeated monthly?	Yes.	No; an 11-step process executed three times a year is sufficient.	For non-Type 1 issues, BellSouth has an 11-step process in I-CCP today with variable inputs and outputs for each step.
		h) a firm schedule for notifications associated with changes initiated by BellSouth?	Yes	No.	BellSouth will provide 30-day notification for ALEC-impacting changes.
		i) a process for dispute resolution, including referral to state utility commissions or courts?	Yes.	No. BellSouth holds default power to implement or not implement any change, at its option.	The I-CCP contains a dispute resolution process. In the event that an issue is not resolved through the I-CCP's escalation process, BellSouth and the affected ALEC(s) will form a Joint Investigative Team of Subject Matter Experts. If the dispute cannot be resolved after this step, then either party may file an appropriate request for resolution of the dispute with the appropriate state commission.

FLORIDA
Issues for Arbitration between AT&T and BellSouth

		Situation	AT&T Proposal	EICCP/I-CCP AT&T's View	EICCP/I-CCP BellSouth's View
		j) a process for the escalation of changes in process?	Yes.	No.	BellSouth is implementing escalation procedures for the I-CCP.
31.	What should be the resolution of the following OSS issues currently pending in the change control process but not yet provided? (OSS, Attachment 7, Exhibit A)	The issues AT&T is bringing forward for arbitration have been at issue between the parties for various periods of time. The current EICCP process is hostage to BellSouth's default power to implement or not implement any change at its option. This default power exists because the EICCP process is not subject to regulatory oversight. Only arbitration provides AT&T with a means by which it can obtain the requested capabilities from BellSouth in an assured and timely manner. Further, in the absence of a binding methodology by which the industry can effect change, change can only be initiated by the actions of two parties which can then be expanded to incorporate others.		Issues such as those delineated in this issue should be resolved in the I-CCP. These are industry issues more properly resolved in another forum and not in this two-party arbitration.	
	a) parsed customer service records for pre-ordering?	BellSouth should provide parsed customer service records for preordering pursuant to industry standards. AT&T needs this in order to fully integrate its ordering systems with BellSouth's and to obtain the functionality now available to BellSouth. BellSouth's internal systems parse the sections and fields of the CSR as needed to meet software program requirements precluding the need for service representatives to re-enter CSR information when processing orders. This item has been an industry standard since the publication of the LSOG3 guidelines.		Issues such as those delineated in this issue should be resolved in the I-CCP. These are industry issues more properly resolved in another forum and not in this two-party arbitration.	

	b) ability to submit orders electronically for all services and elements?	BellSouth should provide the ability to submit orders electronically for all services and elements. Lack of electronic ordering increases the possibility of errors and increases costs. BellSouth reported order flow-through for business services for two years before taking the position that these requests do not flow through. BellSouth formerly claimed only that complex business requests did not flow through, but even then, BellSouth admits that its service representatives type their requests into a front end system (DOE or SONGS), which sends the request to SOCS, which then accepts valid requests and issues the required service orders. Examples of instances in which AT&T requires electronic ordering capability are the UNE Platform, handling of remaining service on partial migrations, use of LSR fields to establish proper billing accounts, ability to order xDSL loops, ability to order digital loops, ability to order complex directory listings, ability to order loops and LNP on a single order, and ability to change main account number on a single order.	Requests for changes or revisions to BellSouth's electronic interfaces to its OSS should be submitted through the I-CCP. This process allows BellSouth and the ALEC community to review, prioritize and manage changes and revisions to the electronic interfaces based on the needs of the ALEC participants. The ALEC participants control this process and the associated timelines. Although to BellSouth's knowledge no ALEC has submitted this request to the I-CCP, the I-CCP would be the appropriate forum to handle such a request.
	c) electronic processing after electronic ordering, without subsequent manual processing by BellSouth personnel?	BellSouth should provide electronic processing after electronic ordering. See (b), above. Examples of instances in which AT&T submits electronic orders that are subsequently processed manually include LNP, UNE-P with LCC, and migrations merging existing accounts, related orders. AT&T has submitted change control requests and participated in other discussions aimed at improving the subsequent manual process pending full automation. Examples include worklist mechanization and a Flow-	Requests for changes or revisions to BellSouth's electronic interfaces to its OSS should be submitted through the I-CCP. This process allows BellSouth and the ALEC community to review, prioritize and manage changes and revisions to the electronic interfaces based on the needs of the ALEC participants. The ALEC participants control this process and the associated timelines. Although to BellSouth's knowledge no ALEC has submitted this request to the I-CCP, the I-CCP would

		through Mechanization Project.	be the appropriate forum to handle such a request. Non-discriminatory access to BellSouth's OSS does not mean that all services and elements must be ordered electronically with no manual handling. Some services, such as complex services, require manual handling by BellSouth's account teams for BellSouth retail customers. Processing of requests for ALECs may also require some manual processing for these same functions. Local service requests for some types of services are submitted electronically but "fall out" by design for processing. Even though the requests by design "fall out" for processing, electronic submission of the request improves the overall efficiency and effectiveness of order processing.
32.	Should BellSouth provide AT&T with the ability to access, via EBI/ECTA, the full functionality available to BellSouth from TAFI and WFA? (OSS, Attachment 7)	Yes. TAFI is a non-integrateable interface so AT&T must make additional entries into its own maintenance and repair systems, while BellSouth need only make this entry once. EBI/ECTA is a machine-to-machine interface capable of integration but with limited functional capabilities. It is technically feasible to provide the full suite of TAFI functions via EBI/ECTA.	BellSouth provides AT&T with complete access to TAFI and has complied with the current standards for ECTA. Future enhancements to ECTA shall be through the EICCP.
33.	Should AT&T be allowed to share the spectrum on a local loop for voice and data when AT&T purchases a loop/port combination and if so, under what rates, terms, and conditions? (UNE's, Attachment 2, Section 3.10)	Yes. BellSouth's position that sharing of the spectrum on local loop/port combination is only permitted when BellSouth utilizes the portion of the spectrum to provide voice is discriminatory and anti-competitive. Any purchaser of local loops from BellSouth should be allowed to use the loop in providing both voice and data at the same time. There are no technical constraints to this arrangement. The	No. BellSouth only will allow AT&T to share the spectrum on a local loop/port combination when BellSouth utilizes the portion of the spectrum to provide voice.

		Commission's ordering of such arrangements will further the deployment of advanced data services to all portions of the state, and will not be dependent on the deployment schedule of BellSouth alone.	
34.	What Are the appropriate rates and charges for unbundled network elements and combinations of network elements?	Issues related to rates and charges will be taken up in Docket No. 990649-TP, as discussed in the Commission's orders.	Issues related to rates and charges will be taken up in Docket No. 990649-TP, as discussed in the Commission's orders.

ATTACHMENT 3

LOCAL INTERCONNECTION

TABLE OF CONTENTS

1. NETWORK INTERCONNECTION 1

2. METHODS OF INTERCONNECTION 7

3. INTERCONNECTION TRUNKING AND ROUTING 12

4. NETWORK DESIGN AND MANAGEMENT FOR INTERCONNECTION 22

5. NETWORK MAINTENANCE 29

6. INTERCONNECTION COMPENSATION 28

EXHIBIT A Rates for Interconnection

EXHIBIT B Space License Terms and Conditions

EXHIBIT C BellSouth Proposed Preferred Interconnection Architecture

EXHIBIT D BellSouth Proposed One Way Trunking Requirement

EXHIBIT E BellSouth Proposed Two Way Trunking Requirement

EXHIBIT F BellSouth Proposed Super Group Interconnection Architecture

LOCAL INTERCONNECTION

1 NETWORK INTERCONNECTION

1.1 The Parties shall provide interconnection with each other's network for the transmission and routing of telephone exchange service (local) and exchange access (intraLATA toll and switched access).

1.2 **DISAGREE**

AT&T PROPOSAL

For the purpose of accessing UNEs provided by BellSouth, BellSouth shall permit AT&T to interconnect with BellSouth at any technically feasible point, including tandems, end offices, designated points of interface (facility or switch) or customer premises. Nothing in this Attachment 3 shall limit AT&T's right to interconnect with BellSouth for access to UNEs. ~~BellSouth shall provide interconnection with BellSouth's network at any technically feasible point within BellSouth's network.~~

BST PROPOSAL

BellSouth shall provide interconnection with BellSouth's network at any technically feasible point within BellSouth's network.

1.3 **DISAGREE**

AT&T PROPOSAL

For the purpose of receiving Local Traffic, IntraLATA Toll Traffic, Transit Traffic and Meet Point Traffic (collectively "Interconnection Traffic") from the other party, the parties shall mutually agree to the quantity and location of the Points of Interconnection that each party will establish within each respective LATA. The Point of Interconnection ("POI") is the point at which the originating Party delivers its originated traffic to the terminating Party. The POI locations of one Party may be exactly the same, partially the same or completely different than the POI locations of the other Party.

In the event that the parties cannot reach mutual agreement as to the quantity of POIs, the default shall be the quantity of BellSouth tandems and AT&T tandems within the LATA.

In the event that the parties cannot reach mutual agreement as to the location of POIs, the default shall be the location of each Party's tandem switches.

For purposes of this Attachment 3, every AT&T switch is deemed to be a tandem switch. ~~AT&T shall provide interconnection to BellSouth at any mutually agreed upon point.~~

BST PROPOSAL

AT&T shall provide interconnection to BellSouth at any mutually agreed upon point.

1.4 **DISAGREE**

AT&T PROPOSAL

Following the establishment of the quantity and location of POIs, each Party shall specify to the other Party the POI associated with each switch it operates. The sending Party agrees to terminate its Interconnection Traffic at the POI specified by the receiving Party or, when mutually agreed to, a secondary POI identified in any jointly-developed trunk service plans.

BST PROPOSAL

AT&T must establish, at a minimum, a single Point of Presence, Point of Interface, and Point of Interconnection with BellSouth within the LATA for the delivery of AT&T's originated local, intraLATA toll terminated to BellSouth and transit traffic terminated to other than BellSouth. If AT&T chooses to interconnect at a single Point of Interconnection within a LATA, the interconnection must be at a BellSouth access or local tandem. Furthermore, AT&T must establish Points of Interconnection at all BellSouth access and local tandems where AT&T NXXs are "homed." A "Homing" arrangement is defined by a "Final" Trunk Group between the BellSouth access or local tandem and AT&T End Office switch. A "Final" Trunk Group is the last choice telecommunications path between the access or local tandem and End Office switch. It is AT&T's responsibility to enter its own NPA/NXX access and/or local tandem "homing" arrangements into the national Local Exchange Routing Guide ("LERG"). In order for AT&T to home its NPA/NXX(s) on a BellSouth access or local tandem, AT&T's NPA/NXX(s) must be assigned to an exchange rate center area served by that BellSouth access or local tandem and as specified by BellSouth.

1.5 A Point of Presence is the physical location (a structure where the environmental, power, air conditioning, etc. specifications for a Party's terminating equipment can be met) at which a Party establishes itself for obtaining access to the other Party's network. The Point of Presence is the physical location within which the Point(s) of Interface occur.

1.6 A Point of Interface is the physical telecommunications interface between BellSouth and AT&T's interconnection facilities. It establishes the technical interface and point of operational responsibility. The primary purpose of the Point of Interface is to serve as the terminus for each Party's interconnection facilities. The Point of Interface has the following main characteristics:

1.6.1 It is a cross-connect point to allow connection, disconnection, transfer or restoration of service.

1.6.2 It is a point where BellSouth and AT&T can verify and maintain specific performance objectives.

1.6.3 It is specified accordingly to the interface offered in this Attachment 3.

1.6.4 **The Parties will provide or will cause to be provided equipment to interface with the equipment on the customer premises. [OPEN-BST]**

1.7 **DISAGREE**

AT&T PROPOSAL

~~**The Point of Interconnection is the point at which the originating Party delivers its originated traffic to the terminating Party's first point of switching on the terminating Party's common (shared) network for call transport and termination. Points of Interconnection are available at either access tandems, local tandems, End Offices, or any other technically feasible point, as described in this Agreement. AT&T's requested Point of Interconnection will also be used for the receipt and delivery of transit traffic at BellSouth access and local tandems. Points of Interconnection established at the BellSouth local tandem apply only to AT&T-originated local and local originating and terminating transit traffic.**~~

BST PROPOSAL

The Point of Interconnection is the point at which the originating Party delivers its originated traffic to the terminating Party's first point of switching on the terminating Party's common (shared) network for call transport and termination. Points of Interconnection are available at either access tandems, local tandems, End Offices, or any other technically feasible point, as described in this Agreement. AT&T's requested Point of Interconnection will also be used for the receipt and delivery of transit traffic at BellSouth access and local tandems. Points of Interconnection established at the BellSouth local tandem apply only to AT&T-originated local and local originating and terminating transit traffic.

1.8 The Parties will work cooperatively to establish the most efficient trunking network in accordance with the provisions set forth in this Attachment 3 and accepted industry practices.

1.9 Each party will be responsible for engineering its network (i.e., the underlying facilities on which trunks are provisioned) on its side of the Point of Interface. Each Party shall establish Points of Presence and Points of Interface for the delivery of its originated local and intraLATA toll traffic to the other Party. The Point of Interface may not necessarily be established at the Point of Interconnection.

1.10 **DISAGREE**

AT&T PROPOSAL

~~**BellSouth shall designate the Points of Presence and Points of Interface for the delivery of its originated local and intraLATA toll traffic to AT&T for call transport and termination by AT&T.**~~

BST PROPOSAL

BellSouth shall designate the Points of Presence and Points of Interface for the delivery of its originated local and intraLATA toll traffic to AT&T for call transport and termination by AT&T.

1.11 **DISAGREE**

AT&T PROPOSAL

~~**For the purposes of this Attachment 3, Local Channel is defined as a switch transport facility between a Party's Point of Presence and its designated serving wire center.**~~

BST PROPOSAL

For the purposes of this Attachment 3, Local Channel is defined as a switch transport facility between a Party's Point of Presence and its designated serving wire center.

1.12 For the purposes of this Attachment 3, Serving Wire Center is defined as the wire center owned by one Party from which the other Party would normally obtain dial tone for its Point of Presence.

1.13 **DISAGREE**

AT&T PROPOSAL

For the purposes of this Attachment 3, Dedicated Transport is defined as a **transport facility between two points specified by the requesting Party.**

BST PROPOSAL

For the purposes of this Attachment 3, Dedicated Transport is defined as a **switch transport facility between a Party's designated serving wire center and the first point of switching on the other Party's common (shared) network.**

1.14 Prices for interconnection facilities are contained in Exhibit A to this Attachment.

2 METHODS OF INTERCONNECTION

2.1 The Parties shall interconnect their networks utilizing one of the following methods in accordance with the provisions set forth in this Attachment 3.

2.1.1 Interconnection by one Party at the premises of the other Party.

2.1.2 BellSouth shall provide collocation to AT&T pursuant to the terms set forth in Attachment 4 of this Agreement, incorporated herein by this reference. AT&T may, at its option, purchase such collocation at the rates, terms, and conditions set forth in Attachment 4 of this Agreement, incorporated herein by this reference.

2.1.3 AT&T, pursuant to the prices, terms and conditions contained in Exhibit B to this Attachment, incorporated herein by this reference, may permit BellSouth to utilize space and power in AT&T facilities specified by AT&T solely for the purpose of terminating BellSouth's

local traffic. BellSouth may request installation of both cable and equipment, or cable only.

2.1.4 Leased Facilities – where the Party requesting interconnection utilizes the facilities offered by the other Party. Such leased facilities shall be provided at the rates, terms, and conditions set forth in this Attachment 3. At AT&T's request, it may lease separate facilities for the sole purpose of delivering undipped 8YY traffic from AT&T's end users to BellSouth's Switching Services Port ("SSP") for dipping into BellSouth's toll free database.

2.1.5 Third Party Facilities – where the Party requesting interconnection utilizes the facilities provided by a source other than the Parties to this Agreement. The Party utilizing this option shall comply with industry standards to maintain network integrity and will be solely responsible for any charges or fees assessed by the third party for use of its facilities.

2.1.6 Commercial Intra-building Interconnection – where both Parties have constructed broadband facilities into a commercial building (i.e., a building that is not a telephone central office) and agree to establish a Point of Interface at such location utilizing intra-building cable.

2.1.7 Fiber Meet - where the Parties physically interconnect their networks via an optical fiber interface (as opposed to an electrical interface), at which one Party's facilities, provisioning, and maintenance responsibility begins and the other Party's responsibility ends (i.e., Point of Interface). A Fiber Meet shall be an arrangement as set forth in Section 2.3 of this Attachment 3.

2.1.8 Any other method determined to be technically feasible and requested by AT&T shall be done pursuant to the process defined in Attachment 14 of this Agreement, incorporated herein by this reference. Any other method determined to be technically feasible and requested by BellSouth and agreed to by AT&T shall be done pursuant to [_____.] **[OPEN-AT&T]**

2.2 **DISAGREE**

AT&T PROPOSAL

~~**Local Tandem Interconnection. This interconnection arrangement allows AT&T to establish a Point of Interconnection at BellSouth local tandems for: (1) the delivery of AT&T-originated local traffic transported and terminated by BellSouth to BellSouth end offices within the local calling area as defined in BellSouth's General**~~

~~**Subscriber Services Tariff, Section A3 served by those BellSouth local tandems; and (2) for local transit traffic transported by BellSouth for third party network providers who have also established Points of Interconnection at those BellSouth local tandems.**~~

BST PROPOSAL

Local Tandem Interconnection. This interconnection arrangement allows AT&T to establish a Point of Interconnection at BellSouth local tandems for: (1) the delivery of AT&T-originated local traffic transported and terminated by BellSouth to BellSouth end offices within the local calling area as defined in BellSouth's General Subscriber Services Tariff, Section A3 served by those BellSouth local tandems; and (2) for local transit traffic transported by BellSouth for third party network providers who have also established Points of Interconnection at those BellSouth local tandems.

2.2.1 **DISAGREE**

AT&T PROPOSAL

When a specified local calling area is served by more than one BellSouth local tandem, AT&T must designate a "home" local tandern for each of its assigned NPA/NXXs and establish trunk connections to such local tandems. Additionally, AT&T may choose to establish a Point of Interconnection at the BellSouth local tandems where it has no codes homing but is not required to do so. ~~**AT&T may deliver local traffic to a "home" BellSouth local tandem that is destined for other BellSouth or third party network provider end offices subtending other BellSouth local tandems in the same local calling area where AT&T does not choose to establish a Point of Interconnection.**~~ It is AT&T's responsibility to enter its own NPA/NXX local tandem homing arrangements into the LERG either directly or via a vendor in order for other third party network providers to determine appropriate traffic routing to AT&T's codes. Likewise, AT&T shall obtain its routing information from the LERG.

BST PROPOSAL

When a specified local calling area is served by more than one BellSouth local tandem, AT&T must designate a "home" local tandem for each of its assigned NPA/NXXs and establish trunk connections to such local tandems. Additionally, AT&T may choose to establish a Point of Interconnection at the BellSouth local tandems where it has no

codes homing but is not required to do so. **AT&T may deliver local traffic to a "home" BellSouth local tandem that is destined for other BellSouth or third party network provider end offices subtending other BellSouth local tandems in the same local calling area where AT&T does not choose to establish a Point of Interconnection.** It is AT&T's responsibility to enter its own NPA/NXX local tandem homing arrangements into the LERG either directly or via a vendor in order for other third party network providers to determine appropriate traffic routing to AT&T's codes. Likewise, AT&T shall obtain its routing information from the LERG.

2.2.2 Notwithstanding establishing Points of Interconnection to BellSouth's local tandems, AT&T must also establish Points of Interconnection to BellSouth access tandems within the LATA on which AT&T has NPA/NXX's homed for the delivery of Interexchange Carrier Switched Access ("SWA") and toll traffic, and traffic to Type 2A CMRS connections located at the access tandems. BellSouth cannot switch SWA traffic through more than one BellSouth access tandem. SWA, Type 2A CMRS or toll traffic routed to the local tandem in error will not be backhauled to the BellSouth access tandem for completion. (Type 2A CMRS interconnection is defined in BellSouth's General Subscriber Services Tariff, Section A35.)

2.2.3 **DISAGREE**

AT&T PROPOSAL

~~**Bell South's provisioning of local tandem interconnection assumes that AT&T has the necessary local interconnection arrangement with the other third party network providers subtending those local tandems as required by the Act.**~~

BST PROPOSAL

BellSouth's provisioning of local tandem interconnection assumes that AT&T has the necessary local interconnection arrangement with the other third party network providers subtending those local tandems as required by the Act.

2.3 Fiber Meet

2.3.1 If AT&T elects to establish a POI with BellSouth pursuant to a Fiber Meet, AT&T and BellSouth shall jointly engineer and operate a Synchronous Optical Network ("SONET") transmission system by which they shall interconnect their transmission and routing of local traffic via a facility at either the DS1, or DS3 level and shall be ordered

via an Access Services Request ("ASR") in the initial phase of this offering. The Parties shall work jointly to determine the specific transmission system. The parties will work cooperatively to establish joint access to transmission overhead signals and commands for such facilities and software. However, AT&T's SONET transmission must be compatible with BellSouth's equipment in the serving wire center. The Parties will work cooperatively in the selection of compatible transmission equipment and software. Fiber Meet will be used for the provision of two-way trunking unless otherwise agreed to by the Parties.

2.3.2 BellSouth shall, wholly at its own expense, procure, install and maintain the agreed upon SONET equipment in the BellSouth Serving Wire Center ("BSWC").

2.3.3 AT&T shall, wholly at its own expense, procure, install and maintain the agreed upon SONET equipment in the AT&T Serving Wire Center ("ASWC").

2.3.4 The parties shall mutually agree upon a Point of Interface outside of the BSWC as a Fiber Meet point and shall make all necessary preparations to receive and to allow and enable delivery of fiber optic facilities into the Point of Interface with sufficient spare length to reach the Point of Interface. A Common Language Location Identification ("CLLI") code will be established for each Point of Interface. The code established must be a building type code. All orders shall originate from the Point of Interface (i.e., Point of Interface to AT&T or Point of Interface to BellSouth).

2.3.5 The Parties shall deliver and maintain their own strands wholly at their own expense. Upon verbal request by either Party, the other Party shall allow access to the Fiber Meet entry point for maintenance purposes as promptly as possible.

2.3.6 The Parties shall jointly coordinate and undertake maintenance of the SONET transmission system. Each Party shall be responsible for maintaining the components of their own SONET transmission system.

2.3.7 Each Party will be responsible for (i) providing its own transport facilities to the Fiber Meet, and (ii) the cost to build-out its facilities to such Fiber Meet.

2.3.8 Neither Party shall charge the other for its portion of the Fiber Meet facility between the ASWC and the BSWC used exclusively for the other Party's local traffic (i.e., the Local Channel). The Parties do not intend to utilize this arrangement for transit traffic.

3 INTERCONNECTION TRUNKING AND ROUTING

3.1 The parties will establish separate trunk groups as follows:

3.1.1 Local Traffic trunk groups will be established to carry combined local and intraLATA toll traffic. Local traffic means traffic that is originated by an end user of one Party and terminates to an end user of the other Party within a given LATA. Unless the Parties mutually agree otherwise, Local Traffic trunk groups shall be one-way terminating trunks.

3.1.2 Two-way Meet Point Traffic trunk groups will be established to carry Switched Access traffic for third-party IXC customers.

3.1.3 Two-way Transit Traffic trunk groups will be established to carry traffic between AT&T and third party CLECs or ILECs other than BellSouth. The Parties agree that Meet Point Traffic and Transit Traffic may be combined on a single trunk group at AT&T's request.

3.1.4 At AT&T's request, one-way Meet Point Traffic trunks will be established by the Parties to enable AT&T to deliver undipped 8YY traffic from AT&T Customers to the LEC SSP for dipping in the Industry Toll Free Data Base. All originating toll free service calls for which AT&T requests that the BellSouth perform the SSP function (e.g., perform the database query) shall be delivered to BellSouth, using an agreed upon signaling format. This can be either GR-394-CORE format with Carrier Code "0110" and Circuit Code of "08" or GR-317-CORE format. Charges for dipping and transport to the IXC will be billed in accordance with MECOD/MECAB guidelines.

3.1.5 Special use trunks (e.g., 911, choke) will be established in accordance with this Section [ ].

3.2 The Parties will convert all existing interconnection arrangements and trunks to the interconnection arrangements described in this Attachment in accordance with the following:

3.2.1 **Within 45 days of the Effective Date, the Parties will mutually develop an operations plan based on sound engineering and operations principles, which will specify the guidelines to convert from the existing interconnection arrangements to the interconnection arrangements described in this Attachment 3. Such guidelines will conform to standard industry practices adopted by and contained in documents published by Industry Forums, including but not limited to, the Alliance for**

Telecommunications Industry Solutions ("ATIS") and the Ordering and Billing Forum ("OBF").

3.2.2 **Each Party shall bear its own costs to convert from the existing interconnection arrangements to the interconnection arrangements described in this Attachment.**

3.2.3 **Unless otherwise mutually agreed, the Parties will complete the conversion within one (1) year of the Effective Date of the Agreement.**

3.2.4 **If, following one (1) year after the Effective Date of the Agreement, there exists any interconnection trunks which have not been converted to the interconnection arrangements described in this Attachment 3, then either Party may invoke the dispute resolution process, pursuant to Section 16 of the General Terms and Conditions of this Agreement, incorporated herein by this reference. [OPEN-BST/AT&T]**

3.3 The Parties will use the following interconnection standards:

3.3.1 The Parties agree to establish Binary 8 Zero Sum Extended Superframe line protocol, where technically feasible.

3.3.2 In those cases where either Party's equipment will not support 64K Clear Channel Capability ("CCC"), the Parties agree to establish AMI line coding. Any AMI line coding will be Superframe formatted. DS3 facilities will be provisioned with C-bit parity.

3.3.3 Where additional equipment is required, such equipment shall be obtained, engineered, and installed to support 64K CCC trunks.

3.3.4 All interconnection facilities between the Parties will be sized according to mutual forecasts developed per the requirements of Section 4.8 of this Attachment 3 and sound engineering practices.

3.3.5 Interconnection will be provided utilizing either a DS1 or DS3 interface or, with the mutual agreement of the Parties, another technically feasible interface (e.g., STS-1).

3.3.6 BellSouth and AT&T shall establish interconnecting trunk groups and trunking configurations between networks including the establishment of one-way or two-way trunks, in accordance with Exhibits C and D of this Attachment, incorporated herein by reference.

3.3.7 All terms and conditions, as well as charges, both non-recurring and recurring, associated with interconnecting trunk groups between BellSouth and AT&T not addressed in Exhibit A shall be as set forth in the appropriate Party's intrastate or interstate tariff for switched access services. For two-way trunking that carries the Parties' local and intraLATA toll traffic, excluding transit traffic, the Parties shall be compensated for the nonrecurring and recurring charges for trunks and DS1 facilities at 50% of the applicable contractual or tariff rates for the services provided by each Party. AT&T shall be responsible for ordering and paying for any two-way trunks carrying transit traffic.

3.4 All originating toll free service calls for which the end office Party performs the SSP function, if delivered to the tandem Party, shall be delivered by the end office Party using GR-394 CORE format for IXC bound calls, or using GR-317-CORE format for LEC bound calls.

3.5 **Originating Feature Group B calls delivered to either Party's tandem shall use GR-317-CORE signaling format unless the associated FGB carrier employs GR-394-CORE signaling for its FGB traffic at the serving access tandem. [OPEN-BST]**

3.6 The Parties shall deliver over any trunk groups groomed for a specific access tandem only traffic destined for those publicly-dialable NPA NXX codes served by: (1) end offices that directly subtend the access tandem; and (2) those providers (including, but not limited to CMRS providers, other independent LECs, and CLECs) that directly connect to the access tandem.

3.7 For BellSouth end offices that do not normally subtend tandem for which calls are routed to that end office on an alternate routing basis, BellSouth will provide AT&T its alternative routing (scheme) arrangements. Where BellSouth utilizes alternative arrangements, it shall deliver any traffic through that alternative routing.

3.8 The Parties shall deliver over any trunk groups groomed for a specific end office only traffic destined for those publicly-dialable NPA NXX codes served by that end office, unless otherwise agreed to by the Parties.

3.9 The source for the routing information for all traffic shall be the LERG, unless otherwise agreed to between the Parties.

3.10 Where either Party delivers over the local traffic trunk groups miscellaneous calls (e.g., time, weather, 976) destined for the other Party, it shall deliver such traffic in accordance with the serving arrangements defined in the LERG.

3.11 The Parties will cooperate to establish separate, choke trunk groups for the completion of calls to end users such as radio contest lines. Notwithstanding the foregoing, the Parties agree that where the Parties' switch has the capability to perform call gapping and other protective network traffic management controls, separate trunk groups shall not be required to carry such traffic.

3.12 N11 code traffic shall be routed between the Parties' networks pursuant to accepted industry practice (e.g., over local traffic trunks or over separate trunk groups).

3.13 Each Party shall establish procedures whereby its operator bureau will coordinate with the operator bureau of the other Party in order to provide Busy Line Verification/Busy Line Verification Interrupt services on calls between their respective line side end users for numbers that are not ported.

3.14 A blocking standard of one-half of one percent (.005) shall be maintained during the average busy hour for final trunk groups carrying jointly provided exchange access traffic between an end office and an access tandem. All other final trunk groups are to be engineered with a blocking standard of one percent (.01). High usage trunk groups shall be sized to an economic CCS parameter mutually agreed to by both Parties.

3.14.1 BellSouth agrees to provide upon request of AT&T, pursuant to Attachment 6 of this Agreement, traffic usage data (including, but not limited to, usage, peg and overflow counts) for each AT&T NXX subtending the BellSouth tandem to determine which AT&T traffic by NXX is being blocked.

3.14.2 Pursuant to Attachment 9, incorporated herein by this reference, BellSouth shall report to AT&T information regarding blocking of interconnection traffic.

3.15 The Parties agree to jointly manage the capacity of interconnection trunk groups to encourage the economic deployment of increasingly robust and diverse interconnection between their networks.

DISAGREE

AT&T PROPOSAL

3.16 ~~**BellSouth Access Tandem Interconnection Architectures**~~

3.16.1 ~~BellSouth Access Tandem Interconnection provides intratandem access to subtending end offices.~~

3.17 ~~Preferred Trunking Interconnection~~

3.17.1 ~~In this interconnection architecture AT&T's originating Local and IntraLATA Toll and originating and terminating Transit Traffic is transported on a single two-way trunk group between AT&T and BellSouth access tandem(s) within a LATA. This group carries intratandem Transit Traffic between AT&T and Independent Companies, Interexchange Carriers, other CLECs and other network providers with which AT&T desires interconnection and has the proper contractual arrangements. This group also carries AT&T originated intertandem traffic transiting a single BellSouth access tandem destined to third party tandems such as an Independent Company tandem or other CLEC tandem. BellSouth originated Local and IntraLATA Toll traffic is transported on a single one-way trunk group terminating to AT&T. The Two-way Trunking Rules, described in this Agreement, do not apply to this architecture. Other trunk groups for operator services, directory assistance, emergency services and intercept may be established if required. The LERG should be referenced for current routing and tandem serving arrangements. The Preferred Trunking Interconnection architecture is illustrated in Exhibit C.~~

3.18 ~~One Way Trunking Interconnection~~

3.18.1 ~~In this arrangement, the Parties interconnect using two one-way trunk groups. One one-way trunk group carries AT&T-originated local and intraLATA toll traffic destined for BellSouth end-users. The other one-way trunk group carries BellSouth-originated local and intraLATA toll traffic destined for AT&T end-users. A third two-way trunk group is established for AT&T's originating and terminating Transit Traffic. This group carries intratandem Transit Traffic between AT&T and Independent Companies, Interexchange Carriers, other CLECs and other network providers with which AT&T desires interconnection and has the proper contractual arrangements. This group also carries AT&T originated intertandem traffic transiting a single BellSouth access tandem destined to third party tandems such as an Independent Company tandem or other CLEC tandem. Other trunk groups for operator services, directory assistance, emergency services and intercept may be established if required. The LERG should be referenced for current routing and tandem serving arrangements. One Way Trunking Interconnection is illustrated in Exhibit D.~~

3.19 ~~Two-Way Trunking Interconnection~~

3.19.1 ~~Two-Way Trunking Interconnection establishes one two-way trunk group to carry local and intraLATA toll traffic between AT&T and BellSouth. To establish this type of configuration, AT&T and BellSouth must agree to the Two-way Trunking Rules. In addition, a two-way transit trunk group must be established for AT&T's originating and terminating Transit Traffic. This group carries intratandem Transit Traffic between AT&T and Independent Companies, Interexchange Carriers, other CLECs and other network providers with which AT&T desires interconnection and has the proper contractual arrangements. This group also carries AT&T originated intertandem traffic transiting a single BellSouth access tandem destined to third party tandems such as an Independent Company tandem or other CLEC tandem. Other trunk groups for operator services, directory assistance, emergency services and intercept may be established if required. The LERG should be referenced for current routing and tandem serving arrangements. Two-Way Trunk Interconnection is illustrated in Exhibit E.~~

3.20 ~~Supergroup Interconnection~~

3.20.1 ~~In the Supergroup Interconnection arrangement, the Parties Local and IntraLATA Toll and AT&T's Transit Traffic is exchanged on a single two-way trunk group between AT&T and BellSouth. AT&T and BellSouth must agree to the Two-way Trunking Rules in order to establish this architecture. This group carries intratandem Transit Traffic between AT&T and Independent Companies, Interexchange Carriers, other CLECs and other network providers with which AT&T desires interconnection and has the proper contractual arrangements. This group also carries AT&T originated intertandem traffic transiting a single BellSouth access tandem destined to third party tandems such as an Independent Company tandem or other CLEC tandem. Other trunk groups for operator services, directory assistance, emergency services and intercept may be established if required. The LERG should be referenced for current routing and tandem serving arrangements. Supergroup Interconnection is illustrated in Exhibit F.~~

3.21 ~~Two-Way Trunking Rules:~~

3.21.1 ~~AT&T will initiate two-way trunk request, and BellSouth will concur. However, two-way trunks will be jointly provisioned.~~

3.21.2 ~~The Point of Interface will be located at a mutually agreed location or point designated by BellSouth. If an agreement cannot be reached on the location of the Point of Interface, each company will establish its own Point of Interface and order one-way trunks.~~

3.21.3 ~~BellSouth and AT&T will jointly review the trunk forecast, as needed, on a periodic basis, or at least every six (6) months.~~

3.21.4 ~~AT&T will order trunks using ASR process in place for Local Interconnection after the joint planning meeting takes place between BellSouth and AT&T.~~

3.21.5 ~~BellSouth and AT&T must agree on Standard Traffic Engineering parameters that will be used in the engineering of the trunk groups.~~

3.21.6 ~~BellSouth and AT&T must agree to meet and resolve service-affecting situations in a timely manner. This contact will normally be made through the Account Team.~~

3.21.7 ~~Establishing a two-way trunk group does not preclude BellSouth or AT&T from adding one-way trunk groups within the same Local Calling Area.~~

3.21.8 ~~For technical reasons, two-way trunk groups may not be ordered to a BellSouth DMS100 Local Tandem or DMS100 End Office.~~

3.21.9 ~~BellSouth will be responsible for the installation and maintenance of its trunks and facilities to the mutually agreed Point of Interface, and AT&T will be responsible for the installation and maintenance of its trunks and facilities to the mutually agreed to Point of Interface.~~

3.22 ~~BellSouth End Office Interconnection~~

3.22.1 ~~AT&T may establish interconnection at BellSouth end offices for the delivery of AT&T originated local and intralata toll traffic destined for BellSouth end-users served by that end-office.~~

3.22.2 ~~When end office trunking is ordered by BellSouth to deliver BellSouth originated traffic to AT&T, BellSouth will provide overflow routing through BellSouth tandems consistent with how BellSouth overflows it's traffic. The overflow will be based on the homing arrangements AT&T displays in the LERG. Likewise, if AT&T interconnects to a BellSouth end office for delivery of AT&T originated traffic, AT&T will overflow the traffic through the~~

~~BellSouth tandems based on the BellSouth homing arrangements shown in the LERG.~~

BST PROPOSAL

3.23 **BellSouth Access Tandem Interconnection Architectures**

3.23.1 **BellSouth Access Tandem Interconnection provides intratandem access to subtending end offices.**

3.24 **Preferred Trunking Interconnection**

3.24.1 **In this interconnection architecture AT&T's originating Local and IntraLATA Toll and originating and terminating Transit Traffic is transported on a single two-way trunk group between AT&T and BellSouth access tandem(s) within a LATA. This group carries intratandem Transit Traffic between AT&T and Independent Companies, Interexchange Carriers, other CLECs and other network providers with which AT&T desires interconnection and has the proper contractual arrangements. This group also carries AT&T originated intertandem traffic transiting a single BellSouth access tandem destined to third party tandems such as an Independent Company tandem or other CLEC tandem. BellSouth originated Local and IntraLATA Toll traffic is transported on a single one-way trunk group terminating to AT&T. The Two-way Trunking Rules, described in this Agreement, do not apply to this architecture. Other trunk groups for operator services, directory assistance, emergency services and intercept may be established if required. The LERG should be referenced for current routing and tandem serving arrangements. The Preferred Trunking Interconnection architecture is illustrated in Exhibit C.**

3.25 **One Way Trunking Interconnection**

3.25.1 **In this arrangement, the Parties interconnect using two one-way trunk groups. One one-way trunk group carries AT&T-originated local and intraLATA toll traffic destined for BellSouth end-users. The other one-way trunk group carries BellSouth-originated local and intraLATA toll traffic destined for AT&T end-users. A third two-way trunk group is established for AT&T's originating and terminating Transit Traffic. This group carries intratandem Transit Traffic between AT&T and Independent Companies, Interexchange Carriers, other CLECs and other network providers with which AT&T desires interconnection and has the proper contractual arrangements. This group also carries AT&T originated intertandem traffic transiting a single BellSouth access**

tandem destined to third party tandems such as an Independent Company tandem or other CLEC tandem. Other trunk groups for operator services, directory assistance, emergency services and intercept may be established if required. The LERG should be referenced for current routing and tandem serving arrangements. One Way Trunking Interconnection is illustrated in Exhibit D.

3.26 **Two-Way Trunking Interconnection**

3.26.1 **Two-Way Trunking Interconnection establishes one two-way trunk group to carry local and intraLATA toll traffic between AT&T and BellSouth. To establish this type of configuration, AT&T and BellSouth must agree to the Two-way Trunking Rules. In addition, a two-way transit trunk group must be established for AT&T's originating and terminating Transit Traffic. This group carries intratandem Transit Traffic between AT&T and Independent Companies, Interexchange Carriers, other CLECs and other network providers with which AT&T desires interconnection and has the proper contractual arrangements. This group also carries AT&T originated intertandem traffic transiting a single BellSouth access tandem destined to third party tandems such as an Independent Company tandem or other CLEC tandem. Other trunk groups for operator services, directory assistance, emergency services and intercept may be established if required. The LERG should be referenced for current routing and tandem serving arrangements. Two-Way Trunk Interconnection is illustrated in Exhibit E.**

3.27 **Supergroup Interconnection**

3.27.1 **In the Supergroup Interconnection arrangement, the Parties Local and IntraLATA Toll and AT&T's Transit Traffic is exchanged on a single two-way trunk group between AT&T and BellSouth. AT&T and BellSouth must agree to the Two-way Trunking Rules in order to establish this architecture. This group carries intratandem Transit Traffic between AT&T and Independent Companies, Interexchange Carriers, other CLECs and other network providers with which AT&T desires interconnection and has the proper contractual arrangements. This group also carries AT&T originated intertandem traffic transiting a single BellSouth access tandem destined to third party tandems such as an Independent Company tandem or other CLEC tandem. Other trunk groups for operator services, directory assistance, emergency services and intercept may be established if required. The LERG should be**

referenced for current routing and tandem serving arrangements. Supergroup Interconnection is illustrated in Exhibit F.

3.28 **Two-Way Trunking Rules:**

3.28.1 **AT&T will initiate two-way trunk request, and BellSouth will concur. However, two-way trunks will be jointly provisioned.**

3.28.2 **The Point of Interface will be located at a mutually agreed location or point designated by BellSouth. If an agreement cannot be reached on the location of the Point of Interface, each company will establish its own Point of Interface and order one-way trunks.**

3.28.3 **BellSouth and AT&T will jointly review the trunk forecast, as needed, on a periodic basis, or at least every six (6) months.**

3.28.4 **AT&T will order trunks using ASR process in place for Local Interconnection after the joint planning meeting takes place between BellSouth and AT&T.**

3.28.5 **BellSouth and AT&T must agree on Standard Traffic Engineering parameters that will be used in the engineering of the trunk groups.**

3.28.6 **BellSouth and AT&T must agree to meet and resolve service-affecting situations in a timely manner. This contact will normally be made through the Account Team.**

3.28.7 **Establishing a two-way trunk group does not preclude BellSouth or AT&T from adding one-way trunk groups within the same Local Calling Area.**

3.28.8 **For technical reasons, two-way trunk groups may not be ordered to a BellSouth DMS100 Local Tandem or DMS100 End Office.**

3.28.9 **BellSouth will be responsible for the installation and maintenance of its trunks and facilities to the mutually agreed Point of Interface, and AT&T will be responsible for the installation and maintenance of its trunks and facilities to the mutually agreed to Point of Interface.**

3.29 **BellSouth End Office Interconnection**

3.29.1 **AT&T may establish interconnection at BellSouth end offices for the delivery of AT&T originated local and intralata toll traffic destined for BellSouth end-users served by that end-office.**

When end office trunking is ordered by BellSouth to deliver BellSouth originated traffic to AT&T, BellSouth will provide overflow routing through BellSouth tandems consistent with how BellSouth overflows it's traffic. The overflow will be based on the homing arrangements AT&T displays in the LERG. Likewise, if AT&T interconnects to a BellSouth end office for delivery of AT&T originated traffic, AT&T will overflow the traffic through the BellSouth tandems based on the BellSouth homing arrangements shown in the LERG.

4 NETWORK DESIGN AND MANAGEMENT FOR INTERCONNECTION

4.1 Network Management and Changes. Both Parties will work cooperatively with each other to install and maintain the most effective and reliable interconnected telecommunications networks, including but not limited to, the exchange of toll-free maintenance contact numbers and escalation procedures. Both Parties agree to provide public notice of changes in the information necessary for the transmission and routing of services using its local exchange facilities or networks, as well as of any other changes that would affect the interoperability of those facilities and networks.

4.2 Interconnection Technical Standards. The interconnection of all networks will be based upon accepted industry/national guidelines for transmission standards and traffic blocking criteria. Interconnecting facilities shall conform, at a minimum, to the technical specifications set forth in the applicable industry standard technical references. Signal transfer point, Signaling System 7 ("SS7") connectivity is required at each interconnection point. BellSouth will provide out-of-band signaling using Common Channel Signaling Access Capability where technically and economically feasible, in accordance with the technical specifications set forth in the applicable industry standard technical references. Facilities of each Party shall provide the necessary on-hook, off-hook answer and disconnect supervision and shall hand off calling number ID (Calling Party Number) when technically feasible.

4.3 Quality of Interconnection. The local interconnection for the transmission and routing of telephone exchange service and exchange access that each Party provides to each other will be at least equal in quality to what it provides to itself and any subsidiary or affiliate, where technically feasible, or to any other Party to which each Party provides local interconnection.

4.4 Common Channel Signaling. Both Parties will provide LEC-to-LEC Common Channel Signaling ("CCS") to each other, where available, in conjunction with all traffic in order to enable full interoperability of CLASS features and functions except for call return. All CCS signaling parameters will be provided, including automatic number identification ("ANI"), originating line information ("OLI") calling company category, charge number, etc. All privacy indicators will be honored, and each Party will cooperate with each other on the exchange of Transactional Capabilities Application Part ("TCAP") messages to facilitate full interoperability of CCS-based features between the respective networks. The Parties will provide all line information signaling parameters including, but not limited to, Calling Party Number, Charge Number (if it is different from calling party number), and originating line information ("OLI"). For terminating FGD, either Party will pass any CPN it receives from other carriers. All privacy indicators will be honored. Where available, network signaling information such as Transit Network Selection ("TNS") parameter (SS7 environment) will be provided by the end office Party wherever such information is needed for call routing or billing. Where TNS information has not been provided by the end office Party, the tandem Party will route originating exchange access traffic to the IXC using available translations. The Parties will follow all industry Ordering and Billing Forum ("OBF") adopted guidelines pertaining to TNS codes.

4.4.1 BellSouth's Common Channel Signaling Access Service ("CCSAS") allows interconnected carriers to exchange signaling information over a communications path that is separate from the message path.

4.4.2 The transport portion of CCSAS, commonly referred to as a signaling link, is provided via dedicated 56 kbps out of band signaling connections between the AT&T signaling point of interconnection and BellSouth's signaling point of interconnection ("SPOI").

4.4.3 The network termination point where this interconnection takes place is called the Signaling Transfer Point ("STP") port termination.

4.4.4 Charges for signaling links and the STP port termination can be found in Attachment 2 of this Agreement, incorporated herein by this reference.

4.4.5 Each CCSAS signaling connection provides for two-way digital transmission at speeds in multiples of 56 kbps. The connection to BellSouth's STP pair can be made from either AT&T's signaling point ("SP"), which requires a minimum of two links, or from AT&T's STP pair, which requires a minimum of four links.

4.4.6 SS7 Interconnection will take place at STP locations that are mutually agreed to by the Parties.

4.4.7 Where CCS is not available, in-band multi-frequency signaling will be provided. In such an arrangement, each Party will outpulse the full ten-digit telephone number of the called party to the other Party with appropriate call set-up and Automatic Number Identification ("ANI") where available, at parity.

4.4.8 The Parties will provide CCS to one another, where and as available, in conjunction with access to call related databases and Service Control Points ("SCP"), including toll free databases, Line Information Database ("LIDB"), Calling Name ("CNAM"), and any other necessary databases.

4.4.9 When the Parties establish new links , each Party shall provide its own STP port termination(s) and charge the other Party for the signaling links as follows:

4.4.9.1 Where the SPOI for the signaling link is at a Fiber Meet, there shall be no compensation between the Parties for the signaling link facilities used.

4.4.9.2 Where the SPOI for the signaling link facilities is located at the BellSouth Serving Wire Center where the signaling link facilities terminates and AT&T has furnished the interconnection facility, BellSouth will pay a monthly charge equal to one half of the AT&T-provided facility charge according to BellSouth's unbundled rate element for the facility used. Rates for said interconnection facilities shall be as set forth in Exhibit A in Attachment 2, incorporated herein by this reference.

4.4.9.3 Where the SPOI for the signaling link facilities is located at the AT&T Serving Wire Center facility where the signaling link facilities terminate and BellSouth has furnished the interconnection facility, AT&T will pay a monthly charge equal to one half of the BellSouth-provided facility charge according to BellSouth's unbundled rate element for the facility used. Rates for said interconnection facilities shall be as set forth in Exhibit A in Attachment 2, incorporated herein by this reference.

4.4.9.4 Each party is responsible for all facility maintenance and provisioning on its side of the SPOI.

4.4.10 Implementation of new interconnection arrangements (as opposed to augmentation of existing arrangements), including testing of SS7 interconnection, shall be pursuant to the technical specifications set

forth in the applicable industry standard technical references. Each Party will be expected to provide sufficient cooperative testing resources to ensure proper provisioning, including the ability to confirm that AT&T LERG-assigned NPA NXX codes have been opened, translated and routed accurately in all appropriate BellSouth switches. A mutually agreed test calling plan shall be conducted to ensure successful completion of originating and terminating calls.

4.5 Message Screening

4.5.1 BellSouth shall set message screening parameters so as to accept messages from AT&T local or tandem switching systems destined to any signaling point in the BellSouth SS7 network or any network interconnected to the BellSouth SS7 network with which the AT&T switching system has a legitimate signaling relationship.

4.5.2 BellSouth shall set message screening parameters so as to accept messages destined to/from an AT&T local or tandem switching system or to/from an AT&T Service Control Point ("SCP") from any signaling point or network interconnected to the BellSouth SS7 network with which the AT&T switching system has a legitimate signaling relationship.

4.6 STP Requirements

4.6.1 BellSouth shall provide message transfer part and Signaling Connection Control Point ("SCCP") protocol interfaces in accordance with the technical specifications set forth in the applicable industry standard technical references.

4.7 SS7 Network Interconnection

4.7.1 SS7 Network Interconnection is the interconnection of AT&T STPs and AT&T local or tandem switching systems with the BellSouth STPs. This interconnection provides connectivity that enables the exchange of SS7 messages among BellSouth switching systems and databases, AT&T local or tandem switching systems and other third-party switching systems directly connected to the BellSouth SS7 network.

4.7.2 SS7 Network Interconnection shall provide connectivity to all components of the BellSouth SS7 network. These include:

4.7.2.1 BellSouth local or tandem switching systems;

4.7.2.2 BellSouth databases; and

4.7.2.3 Other third party local or tandem switching systems.

4.7.3 The connectivity provided by SS7 Network Interconnection shall fully support the functions of BellSouth switching systems and databases and AT&T or other third-party switching systems with (note could be an A link or a D/B link direct access to the BellSouth SS7 network.

4.7.4 SS7 Network Interconnection shall provide transport for certain types of TCAP messages. If traffic is routed based on dialed or translated digits between an AT&T local switching system and a BellSouth or other third-party local switching system, either directly or via a BellSouth tandem switching system, then it is a requirement that the BellSouth SS7 network convey via SS7 Network Interconnection the TCAP messages that are necessary to provide Call Management services (Automatic Callback, Automatic Recall, and Screening List Editing) between the AT&T local STPs and the BellSouth or other third-party local switch.

4.7.5 When the capability to route messages based on Intermediate Signaling Network Identifier ("ISNI") is generally available on BellSouth STPs, the BellSouth SS7 Network shall also convey TCAP messages using SS7 Network Interconnection in similar circumstances where the BellSouth switch routes traffic based on a Carrier Identification Code ("CIC").

4.7.6 BellSouth shall offer the following SS7 Network Interconnection options to connect AT&T or AT&T-designated local or tandem switching systems or STPs to the BellSouth SS7 network:

4.7.6.1 A-link interface from AT&T local or tandem switching systems; and

4.7.6.2 D/B-link interface from AT&T STPs.

4.7.7 Each interface shall be provided by one or more sets (layers) of signaling links, as follows:

4.7.7.1 An A-link layer shall consist of two links.

4.7.7.2 A D/B-link layer shall consist of four links.

4.7.8 The Parties agree to implement intraoffice diversity for the signaling links so that no single failure of intraoffice facilities or equipment shall cause the failure of any two links in a layer connecting to a BellSouth STP.

4.7.9 Signaling Call Information. BellSouth and AT&T will send and receive 10 digits for local traffic. Additionally, BellSouth and AT&T will exchange the proper call information, i.e., originated call company number and destination call company number, CIC, and OZZ, including all proper translations for routing between networks and any information necessary for billing.

4.8 Trunk Forecasting and Servicing Requirements.

4.8.1 The Parties shall exchange technical descriptions and forecasts of their interconnection and traffic requirements in sufficient detail necessary to establish the interconnections required to assure traffic completion to and from all customers in their respective designated service areas. In order for BellSouth to provide as accurate reciprocal trunking forecasts as possible to AT&T, AT&T must timely inform BellSouth of any known or anticipated events that may affect BellSouth reciprocal trunking requirements. If AT&T refuses to provide such information, BellSouth shall provide reciprocal trunking forecasts based only on existing trunk group growth and BellSouth's annual estimated percentage of BellSouth subscriber line growth.

4.8.2 Both Parties shall meet every six months or at otherwise mutually agreeable intervals for the purpose of exchanging non-binding forecast of its traffic and volume requirements for the interconnection and Network Elements provided under this Agreement, in the form and in such detail as agreed by the Parties. The Parties agree that each forecast provided under this section shall be deemed "Confidential Information" as set forth in Section 18 of the General Terms and Conditions of this Agreement, incorporated herein by this reference.

4.8.3 The trunk forecast should include trunk requirements for all of the interconnecting trunk groups for the current year plus the next two future years. The forecast meeting between the two companies may be a face-to-face meeting, video conference or audio conference. It may be held regionally or geographically. Ideally, these forecast meetings should be held at least semi-annually, or more often if the forecast is no longer usable. Updates to a forecast or portions thereof should be made whenever the Party providing the forecast deems that the latest trunk requirements exceed the original quantities by 48 trunks or 10%, whichever is greater. Either Party should notify the other Party if they have measurements indicating that a trunk group is exceeding its designed call carrying capacity and is impacting other trunk groups in the network. Also, either Party should notify the other Party if they know of situations in which the traffic load is expected to increase significantly and thus affect the interconnecting trunk

requirements as well as the trunk requirements within the other Party's network. The Parties agree that the forecast information provided under this section shall be deemed "Confidential Information" as set forth in Section 18 of the General Terms and Conditions of this Agreement, incorporated herein by this reference. Each Party shall provide a specified point of contact for planning, forecasting and trunk servicing purposes.

4.8.4 For a non-binding trunk forecast, agreement between the two Parties on the trunk quantities and the timeframe of those trunks does not imply any liability for failure to perform if the trunks are not available for use at the required time.

4.8.5 Both Parties will manage the capacity of their interconnection trunk groups. BellSouth will issue an ASR to AT&T to order changes BellSouth desires to the BellSouth interconnection trunk groups based on BellSouth's capacity assessment. AT&T will issue an ASR to BellSouth to order changes AT&T desires to the AT&T interconnection trunk groups based on AT&T's capacity assessment.

4.8.6 Either Party may issue a Trunk Group Service Request ("TGSR") to the other Party to order changes it desires to the interconnection trunk groups based on its capacity assessment. The Party receiving the TGSR will, within ten (10) business days, respond with an ASR or an explanation of why it believes an ASR is inappropriate.

4.8.7 The Party submitting an ASR will provide complete and accurate tie down inventory assignments in typical industry bay, panel and jack format, or in such other format as the Parties agree, on each order by use of a Design Layout Record. Additional tie down information, such as span information, may be required when applicable.

4.8.8 The Parties will prepare ASRs pursuant to the industry standard guidelines of the OBF.

4.8.9 The Party provisioning the ASR will assign to the requesting Party a location code expressed in CLLI code format that will appear in the Access Customer Terminal Location Field of the ASR.

4.8.10 The standard interval used for the provisioning of additions to local interconnection trunk groups shall be no greater than ten (10) business days, for orders of fewer than ninety-six (96) DS-0 trunks. Other orders shall be determined on an individual case basis. Where feasible, either Party will expedite installation, upon the other Party's request.

4.8.11 Major projects shall be limited to those projects that require the coordination and execution of multiple orders or related activities between and among BellSouth and AT&T work groups specifically relating to: (i) the initial establishment of local interconnection trunk groups; (ii) extending service into a new area; (iii) NXX code moves; (iv) facility grooming; or (v) network rearrangements. If orders that are component pieces of a major project are submitted after project implementation has been jointly planned and coordinated, they shall be submitted with a major project reference. Several orders submitted at one time may not be classified as a major project without the consent of the submitting Party. Each Party will identify a single point of contact that will be responsible for overall coordination and management of a major project through an agreed completion point.

4.8.12 As provided herein, AT&T and BellSouth agree to exchange escalation lists which reflect contact personnel including vice president level officers. These lists shall include name, department, title, phone number, and fax number for each person. AT&T and BellSouth agree to exchange an up-to-date list promptly following changes in personnel or information.

4.9 Interference or Impairment

4.10 **Within three (3) business days of receipt of notification of blocking of traffic originated within the other Party's network, the Parties shall determine and begin work to implement reasonable corrective measures in a manner consistent with industry practices. [OPEN-BST]**

4.11 Local Dialing Parity

4.11.1 BellSouth and AT&T shall provide local and toll dialing parity to each other with no unreasonable dialing delays. Dialing parity shall be provided for all originating telecommunications services that require dialing to route a call. BellSouth and AT&T shall permit similarly situated telephone exchange service end users to dial the same number of digits to make a local telephone call notwithstanding the identity of the end user's or the called party's telecommunications service provider.

5 NETWORK MAINTENANCE

5.1 Outage Repair Standard

5.1.1 In the event of an outage or trouble in any arrangement, facility, or service being provided by BellSouth hereunder, BellSouth will follow

procedures for isolating and clearing the outage or trouble that are no less favorable than those that apply to comparable arrangements, facilities, or services being provided by BellSouth to itself, Affiliate or any other carrier whose network is connected to that of BellSouth.

5.2 BellSouth shall provide AT&T at least sixty (60) days' advance notice of any scheduled maintenance activity which may impact AT&T's end users. Scheduled maintenance shall include, without limitation, such activities as, switch software retrofits, power tests, major equipment replacements and cable rolls. Plans for scheduled maintenance shall include, at a minimum, the following information: location and type of facilities, specific work to be performed, date and time work is scheduled to commence, work schedule to be followed, date and time work is scheduled to be completed, estimated number of work-hours for completion.

6 INTERCONNECTION COMPENSATION

6.1 Compensation for Local and IntraLATA Toll Traffic

6.1.1 Except as provided in this Attachment, the Parties shall bill each other reciprocal compensation in accordance with the standards set forth in this Agreement for all local and intraLATA toll traffic originated by one Party and terminated to the other Party. Such traffic shall be recorded and transmitted to AT&T in accordance with Attachment 6 of this Agreement. Reciprocal compensation for the transport and termination of local and intraLATA toll traffic shall be charged at rates specified in Exhibit A of this Attachment.

6.1.2 **DISAGREE**

AT&T PROPOSAL

Where AT&T provides service to an AT&T end user using any Combinations that includes the local switching Network Element, the Parties shall adopt a "bill and keep" compensation arrangement for local and intraLATA toll traffic. Under this compensation arrangement, the terminating carrier will not charge the originating carrier for such traffic at either the appropriate end office or access tandem switch. Notwithstanding the implementation of a "bill and keep" compensation arrangement for such traffic, BellSouth will record and forward to AT&T all associated usage, as provided in Attachment 6 to this Agreement.

BST PROPOSAL

~~Where AT&T provides service to an AT&T end user using any Combinations that includes the local switching Network Element, the Parties shall adopt a "bill and keep" compensation arrangement for local and intraLATA toll traffic. Under this compensation arrangement, the terminating carrier will not charge the originating carrier for such traffic at either the appropriate end office or access tandem switch. Notwithstanding the implementation of a "bill and keep" compensation arrangement for such traffic, BellSouth will record and forward to AT&T all associated usage, as provided in Attachment 6 to this Agreement.~~

6.1.3 DISAGREE

AT&T PROPOSAL

As clarification of this definition and for reciprocal compensation, Local Traffic does include traffic that originates from or terminates to or through an enhanced service provider or information service provider. **As further clarification, Local Traffic does not include any minutes of traffic that were generated solely for the purpose of receiving reciprocal compensation and were not related to traffic routinely and ordinarily recognized within the industry to constitute local traffic as a result of a telephone call (i.e., voice or data traffic).** ~~As further clarification, Local Traffic does not include traffic that consists of minutes of use from any end user customer that relies upon a call placed by that end user customer or on the end user customer's behalf to establish or maintain a network connection, if: (a) minutes of use to be billed are primarily associated with traffic of a type not routinely and ordinarily recognized by a reasonable person to constitute traffic as a result of a telephone call (i.e., voice or data traffic); (b) the end user customer does not control the destination of the call; and (c) the minutes of use do not serve a legitimate purpose that is unrelated to the receipt of reciprocal compensation or any other benefit that may be derived solely from establishing or maintaining the network connection.~~

BST PROPOSAL

As clarification of this definition and for reciprocal compensation, Local Traffic does **not** include traffic that originates from or is directed to or through an enhanced service provider or information service provider. **As further clarification, Local Traffic does not include traffic that consists of minutes of use from any end user customer that relies**

upon a call placed by that end user customer or on the end user customer's behalf to establish or maintain a network connection, if: (a) minutes of use to be billed are primarily associated with traffic of a type not routinely and ordinarily recognized by a reasonable person to constitute traffic as a result of a telephone call (i.e., voice or data traffic); (b) the end user customer does not control the destination of the call; and (c) the minutes of use do not serve a legitimate purpose that is unrelated to the receipt of reciprocal compensation or any other benefit that may be derived solely from establishing or maintaining the network connection.

6.1.4 **DISAGREE**

AT&T PROPOSAL

Each Party is financially responsible for providing, on its side of the POI, the facilities on which the Local Traffic trunks carrying such Party's local and intraLATA toll traffic are provisioned. ~~The Parties shall provide for the mutual and reciprocal recovery of the costs for the network facilities utilized in transporting and terminating local traffic on each other's network. The Parties agree that charges for transport and termination of calls on their respective networks are as set forth in Exhibit A to this Attachment.~~

BST PROPOSAL

The Parties shall provide for the mutual and reciprocal recovery of the costs for the network facilities utilized in transporting and terminating local traffic on each other's network. The Parties agree that charges for transport and termination of calls on their respective networks are as set forth in Exhibit A to this Attachment.

6.1.5 For the purposes of this Attachment 3, Common (Shared) Transport is defined as the transport of one Party's traffic by the other Party over the other Party's common (shared) facilities between the other Party's tandem switch and end office switch and/or between the other Party's tandem switches.

6.1.6 For the purposes of this Attachment 3, Tandem Switching is defined as the function that establishes a communications path between two switching offices through a third switching office (the Tandem switch).

6.1.7 For the purposes of this Attachment 3, End Office Switching is defined as the function that establishes a communications path between the trunk side and line side of the End Office switch.

6.1.8 **DISAGREE**

AT&T PROPOSAL

~~**If AT&T utilizes a switch outside the LATA and BellSouth chooses to purchase dedicated or common (shared) transport from AT&T for transport and termination of BellSouth originated traffic, BellSouth will pay AT&T no more than the airline miles between the V & H coordinates of the Point of Interface within the LATA where AT&T receives the BellSouth-originated traffic and the V & H coordinates of the BellSouth Exchange Rate Center Area that the AT&T terminating NPA/NXX is associated in the same LATA. For these situations, BellSouth will compensate AT&T at either dedicated or common (shared) transport rates specified in Exhibit A and based upon the network facilities provided by AT&T as defined in this Attachment 3.**~~

BST PROPOSAL

If AT&T utilizes a switch outside the LATA and BellSouth chooses to purchase dedicated or common (shared) transport from AT&T for transport and termination of BellSouth originated traffic, BellSouth will pay AT&T no more than the airline miles between the V & H coordinates of the Point of Interface within the LATA where AT&T receives the BellSouth-originated traffic and the V & H coordinates of the BellSouth Exchange Rate Center Area that the AT&T terminating NPA/NXX is associated in the same LATA. For these situations, BellSouth will compensate AT&T at either dedicated or common (shared) transport rates specified in Exhibit A and based upon the network facilities provided by AT&T as defined in this Attachment 3.

6.1.9 **DISAGREE**

AT&T PROPOSAL

~~**Neither Party shall represent access services traffic (e.g., Internet Protocol Telephony, FGA, FGB, etc.) as Local Traffic for purposes of payment of reciprocal compensation. "Internet Protocol Telephony" is defined as real-time voice conversations over the Internet by converting voices into data which is compressed and**~~

~~split into packets, which are sent over the Internet like any other packets and reassembled as audio output at the receiving end.~~

BST PROPOSAL

Neither Party shall represent access services traffic (e.g., Internet Protocol Telephony, FGA, FGB, etc.) as Local Traffic for purposes of payment of reciprocal compensation. "Internet Protocol Telephony" is defined as real-time voice conversations over the Internet by converting voices into data which is compressed and split into packets, which are sent over the Internet like any other packets and reassembled as audio output at the receiving end.

6.1.10 **Unidentifiable traffic. AT&T shall utilize its NPA/NXXs in such a way and will provide the necessary information so that BellSouth shall be able to distinguish local from intraLATA toll traffic for BellSouth originated traffic. AT&T end users assigned NPA/NXX line numbers shall be physically located in the BellSouth rate center with which the NPA/NXX has been associated. Whenever BellSouth delivers traffic to AT&T for termination on the AT&T's network, if BellSouth cannot determine, because of the manner in which AT&T has utilized its NXX codes whether the traffic is local or toll, BellSouth will charge the applicable rates for originating intrastate network access service as reflected in BellSouth's Intrastate Access Services Tariff. BellSouth will make appropriate billing adjustments if AT&T can provide sufficient information for BellSouth to determine whether said traffic is local or toll. [OPEN-AT&T/BST]**

6.1.11 **DISAGREE**

AT&T PROPOSAL

Percent Local Use. Each Party will report to the other a Percentage Local Usage ("PLU"). The application of the PLU will determine the amount of local minutes to be billed to the other Party. For purposes of developing the PLU, each Party shall consider every local call and every long distance call, excluding intermediary traffic. **BellSouth shall report quarterly PLU factors to AT&T. BellSouth will continue to accept from AT&T the current monthly PLU factors provided under the previous agreement. Such monthly PLU factors will continue for a period of twelve (12) months from the date of this Agreement. At the end of the twelve (12) month period, AT&T will begin to provide quarterly PLU factors, beginning with the quarter immediately following the anniversary date, unless AT&T asserts that the monthly reporting**

demonstrates that the PLU has not stabilized, in which case AT&T will continue to provide monthly PLU factors for an additional six (6) month period or until the Parties agree that the PLU has stabilized, whichever occurs first. For the remainder of the period covered by this Agreement, AT&T will report quarterly factors by the first of January, April, July and September of each year. BellSouth and AT&T shall **also** provide a positive report updating the PLU. Detailed requirements associated with PLU reporting shall be as set forth in BellSouth's Standard Percent Local Use Reporting Platform for Interconnection Purchasers, as it is amended from time to time during this Agreement. Notwithstanding the foregoing, where the terminating company has message recording technology that identifies the traffic terminated, such information, in lieu of the PLU factor, shall at the company's option be utilized to determine the appropriate reciprocal compensation to be paid.

BST PROPOSAL

Percent Local Use. Each Party will report to the other a Percentage Local Usage ("PLU"). The application of the PLU will determine the amount of local minutes to be billed to the other Party. For purposes of developing the PLU, each Party shall consider every local call and every long distance call, excluding intermediary traffic. By the first of **January, April, July and October of each year,** BellSouth and AT&T shall provide a positive report updating the PLU. **BellSouth will accept and implement a monthly PLU, for a period of twelve (12) months, whenever AT&T opens a new calling area or begins marketing local services in a new area. After reporting the PLU monthly for a twelve (12) month period, the PLU reporting will revert to quarterly. Unless the monthly reporting demonstrates that the PLU has stabilized. The reporting Party will continue to report a monthly PLU for an additional six (6) month period or until the Parties agree that the PLU has stabilized, whichever occurs first. In all other instances, the PLY reporting shall be quarterly.** Detailed requirements associated with PLU reporting shall be as set forth in BellSouth's Standard Percent Local Use Reporting Platform for Interconnection Purchasers, as it is amended from time to time during this Agreement. Notwithstanding the foregoing, where the terminating company has message recording technology that identifies the traffic terminated, such information, in lieu of the PLU factor, shall at the company's option be utilized to determine the appropriate reciprocal compensation to be paid.

6.1.12 Percentage Interstate Usage. For combined interstate and intrastate AT&T traffic terminated by BellSouth over the same facilities, AT&T will

be required to provide a projected Percentage Interstate Usage ("PIU") to BellSouth. All jurisdictional report requirements, rules and regulations for Interexchange Carriers specified in BellSouth's Intrastate Access Services Tariff will apply to AT&T. After interstate and intrastate traffic percentages have been determined by use of PIU procedures, the PLU factor will be used for application and billing of local interconnection. Notwithstanding the foregoing, where the terminating company has message recording technology that identifies the traffic terminated, such information, in lieu of the PLU factor, shall at the company's option be utilized to determine the appropriate reciprocal compensation to be paid.

6.1.13 Audits. On thirty (30) days written notice, each Party must provide the other the ability and opportunity to conduct an annual audit of the traffic reported. BellSouth and AT&T shall retain records of call detail for a minimum of nine months from which a PLU and/or PIU can be ascertained. The audit shall be accomplished during normal business hours at an office designated by the Party being audited. Audit requests shall not be submitted more frequently than one (1) time per calendar year. Audits shall be performed by a mutually acceptable independent auditor paid for by the Party requesting the audit. The PLU and/or PIU shall be adjusted based upon the audit results and shall apply to the usage for the quarter the audit was completed, to the usage for the quarter prior to the completion of the audit, and to the usage for the two quarters following the completion of the audit. If, as a result of an audit, either Party is found to have overstated the PLU and/or PIU by twenty percentage points (20%) or more, that Party shall reimburse the auditing Party for the cost of the audit.

6.1.14 Compensation for 800 Traffic. Each Party shall compensate the other pursuant to the appropriate switched access charges, including the database query charge as set forth in the each Party's intrastate or interstate switched access tariffs.

6.1.15 Records for 8YY Billing. Each Party will provide to the other the appropriate records necessary for billing intraLATA 8YY customers. Records required for billing end users purchasing 8YY Services shall be provided pursuant to Attachment 6 of this Agreement, incorporated herein by this reference.

6.1.16 **DISAGREE**

AT&T PROPOSAL

Transit Traffic Service. "Transit Traffic" means all intraLATA traffic that originates from or terminates to AT&T end users that is

terminated or originated by a third-party telecommunications carrier (including another ILEC, CMRS or another CLEC) and uses transit services (which include tandem switching, or transport) provided by BellSouth. Transit traffic does not include traffic originating from or terminating to AT&T end users utilizing resold BellSouth services. For Transit Traffic that is originated by AT&T (or for which AT&T would otherwise pay reciprocal compensation to BellSouth if they were terminated or originated by the BellSouth and not by the third-party telecommunications carrier), AT&T shall compensate BellSouth for providing transit services pursuant Exhibit A to this Attachment 3. AT&T shall be responsible for dealing directly with third-party telecommunications carriers regarding compensation for call origination and termination.

BST PROPOSAL

Transit Traffic Service. BellSouth shall provide tandem switching and transport services for AT&T's transit traffic. Transit traffic is traffic originating on AT&T's network that is switched and/or transported by BellSouth and delivered to a third party's network, or traffic originating on a third Party's network that is switched and/or transported by BellSouth and delivered to AT&T's network. Rates for local transit traffic shall be the applicable call transport and termination charges as set forth in Exhibit A to this Attachment. Rates for intraLATA toll and Switched Access transit traffic shall be the applicable call transport and termination charges as set forth in BellSouth Interstate or Intrastate Switched Access tariffs. Switched Access transit traffic presumes that AT&T's end office is subtending the BellSouth Access Tandem for switched access traffic to and from AT&T's end users utilizing BellSouth facilities, either by direct trunks with the IXC, or via the BellSouth Access Tandem. Billing associated with all transit traffic shall be pursuant to MECAB procedures. Wireless Type 1 traffic shall not be treated as transit traffic from a routing or billing perspective. Wireless Type 2A traffic shall not be treated as transit traffic from a routing or billing perspective until BellSouth and the Wireless carrier have the capability to properly meet-point-bill in accordance with Multiple Exchange Carrier Access Billing (MECAB) guidelines.

6.1.17 Rates for using interfaces to OSS – To the extent AT&T orders Services and Elements for the purpose of interconnection with BellSouth, the rates set forth in Exhibit A of Attachment 2, incorporated herein by this reference, shall apply.

DESCRIPTION	USOC	AT&T PROPOSED *
LOCAL INTERCONNECTION (CALL TRANSPORT AND TERMINATION)		
End Office Switching, per mou		TBD
Tandem Switching, per mou		TBD
Common (Shared) Transport		
Common (Shared) Transport per mile per mou		TBD
Common (Shared) Transport Facilities Termination per mou		TBD
INTEROFFICE TRANSMISSION		
Interoffice Transport - All Dedicated Transport Listed Below- NRC - Tariff Service to UNE		TBD
Interoffice Transport - Dedicated - VG		
Interoffice Transport - Dedicated - 2-Wire VG - per mile	1L5XX	TBD
Interoffice Transport - Dedicated - 2-Wire VG - facilities termination per month	1L5XX	TBD
NRC - Connect 1st	1L5XX	TBD
NRC - Connect Add'l	1L5XX	TBD
NRC - Manual Service Order - First	1L5XX	TBD
NRC -Manual Service Order - Add'l	1L5XX	TBD
Interoffice Transport - Dedicated - DS0 - 56/64 KBPS		
Interoffice Transport - Dedicated - DS0 - per mile per month	1L5XX	TBD
Interoffice Transport - Dedicated - DS0 - facilities termination per month	1L5XX	TBD
NRC - Connect 1st	1L5XX	TBD
NRC - Connect Add'l	1L5XX	TBD
NRC - Manual Service Order - First	1L5XX	TBD
NRC -Manual Service Order - Add'l	1L5XX	TBD
Interoffice Transport - Dedicated - DS1		
Interoffice Transport - Dedicated - DS1 - per mile per month	1L5XX	TBD
Interoffice Transport - Dedicated - DS1 - facilities termination per month	1L5XX	TBD
NRC - Connect 1st	1L5XX	TBD
NRC - Connect Add'l	1L5XX	TBD
NRC - Manual Service Order - First	1L5XX	TBD
NRC -Manual Service Order - Add'l	1L5XX	TBD
NRC - Interoffice Transport - Subsequent Trunk Activation, DS1 and DS3		TBD
Interoffice Transport - Dedicated - DS3		
Interoffice Transport - Dedicated - DS3 - per mile per month	1L5XX	TBD
Interoffice Transport - Dedicated - DS3 - facilities termination per month	1L5XX	TBD
NRC - 1st	1L5XX	TBD

	NRC - Add'l	1L5XX	TBD
	NRC - Manual Service Order - First	1L5XX	TBD
	NRC -Manual Service Order - Add'l	1L5XX	TBD
Local Channel - Dedicated			
Local Channel - All Dedicated Local Channels NRC - Tariff Service to UNE		N/A	TBD
Local Channel - Dedicated - 2-Wire VG		N/A	TBD
	NRC - Connect 1st	N/A	TBD
	NRC - Connect Add'l	N/A	TBD
	NRC - Manual Service Order - First	N/A	TBD
	NRC -Manual Service Order - Add'l	N/A	TBD
Local Channel - Dedicated - 4-Wire VG		N/A	TBD
	NRC - Connect 1st	N/A	TBD
	NRC - Connect Add'l	N/A	TBD
	NRC - Manual Service Order - First	N/A	TBD
	NRC -Manual Service Order - Add'l	N/A	TBD
Local Channel - Dedicated - DS1		N/A	TBD
	NRC - Connect 1st	N/A	TBD
	NRC - Connect Add'l	N/A	TBD
	NRC - Manual Service Order - First	N/A	TBD
	NRC -Manual Service Order - Add'l	N/A	TBD
Local Channel - Dedicated – DS3		N/A	TBD
	NRC - Connect 1st	N/A	TBD
	NRC - Connect Add'l	N/A	TBD
	NRC - Manual Service Order - First	N/A	TBD
	NRC -Manual Service Order - Add'l	N/A	TBD
Local Channel with Interoffice Transmission - Dedicated			
2-W VG Local Channel with DS1 Interoffice Transport - Dedicated			
Local Channel - Dedicated - 2-Wire Voice Grade			TBD
Interoffice Transport - Dedicated - DS1 - per mile			TBD
Interoffice Transport - Dedicated - DS1 - per facility termination			TBD
Interoffice Transport - Dedicated DS1 System			TBD
Interoffice Transport - Voice Grade Plug-in			TBD
	NRC - 1st		TBD
	NRC - Add'l		TBD
	NRC - Manual Service Order - First		TBD
	NRC -Manual Service Order - Add'l		TBD

4-W VG Local Channel with DS1 Interoffice Transport - Dedicated		
Local Channel - Dedicated - 4-Wire Voice Grade		TBD
Interoffice Transport - Dedicated - DS1 - per mile		TBD
Interoffice Transport - Dedicated - DS1 - per facility termination		TBD
Interoffice Transport - Dedicated DS1 System		TBD
Interoffice Transport - Voice Grade Plug-in		TBD
NRC - 1st		TBD
NRC - Add'l		TBD
NRC - Manual Service Order - First		TBD
NRC -Manual Service Order - Add'l		TBD
4-W DS1 Local Channel with DS3 Interoffice Transport - Dedicated		
Local Channel - Dedicated - DS1		TBD
Interoffice Transport - Dedicated - DS3 - per mile		TBD
Interoffice Transport - Dedicated - DS3 - per facility termination		TBD
Interoffice Transport - Dedicated DS3 System		TBD
Interoffice Transport - DS1 Card or W-DCS port		TBD
NRC - 1st		TBD
NRC - Add'l		TBD
NRC - Manual Service Order - First		TBD
NRC -Manual Service Order - Add'l		TBD
4-W DS1 Local Channel with DS1 Interoffice Transport - Dedicated		
Local Channel - Dedicated - DS1		TBD
Interoffice Transport - Dedicated - DS1 - per mile		TBD
Interoffice Transport - Dedicated - DS1 - per facility termination		TBD
NRC - 1st		TBD
NRC - Add'l		TBD
NRC - Manual Service Order - First		TBD
NRC -Manual Service Order - Add'l		TBD
NRC - Interoffice Transport - Subsequent Trunk Activation		TBD
DS3 Local Channel with DS3 Interoffice Transport - Dedicated		
Local Channel - Dedicated - DS3		TBD
Interoffice Transport - Dedicated - DS3 - per mile		TBD
Interoffice Transport - Dedicated - DS3 - per facility termination		TBD
NRC - 1st		TBD
NRC - Add'l		TBD
NRC - Manual Service Order - First		TBD
NRC -Manual Service Order - Add'l		TBD

NOTES:

1 If no rate is identified in the contract, the rate for the specific service or function will be as negotiated by the parties upon request by either party.

2 TBD - To be Determined in docket No.990649-TP

BellSouth's Proposal

EXHIBIT B: SPACE LICENSE

1. AT&T, at its sole discretion, may license BellSouth to situate BellSouth equipment in the AT&T central office and to utilize AT&T site support services in the AT&T central office such as power, heating, ventilation, air conditioning and security for such equipment, for the sole purpose of interconnection. Such licenses and site support services are referred to herein collectively as a "Space License." **If AT&T denies BellSouth a Space License in a particular AT&T central office, AT&T shall assure that BellSouth may interconnect with AT&T's network through an alternative arrangement reasonably acceptable to both parties, including without limitation, lease of AT&T's facilities directly connected to BellSouth's network; mid-span fiber meet; space in an adjacent premises; and an arrangement by which AT&T would assume ownership and control of equipment provided by BellSouth to be located in the AT&T central office for the sole purpose of interconnection. [OPEN AT&T/BST]**

2. The allowable network interfaces under a Space License are DS1, DS3 or another network interface as mutually agreed upon between the Parties to this Agreement.

3. Space Licenses are available subject to the availability of space and site support services in each AT&T central office. To establish a Space License, BellSouth must complete and submit a questionnaire providing requested information to support new space and site support services or to provide additional capacity for existing arrangements.

3.1 Among the information to be provided in the questionnaire, BellSouth must identify the quantity, manufacturer, type and model of any equipment to be installed; the quantity, type and specifications of any transmission cable to be installed (collectively "Licensed Facilities"). The space in the AT&T central office in which BellSouth's equipment is or is to be located is referred to herein as the "Equipment Space."

3.2 **[BellSouth is responsible for the installation of Licensed Facilities in accordance with AT&T's installation processes and procedures. BellSouth will use AT&T's certified vendors for the installation of License Facilities.] [OPEN-AT&T/BST]**

BellSouth's Proposal

3.3 If BellSouth desires to modify its request, prior to notification from AT&T regarding availability, BellSouth may do so by requesting that AT&T cancel the original request providing a new questionnaire to AT&T to process.

4. Following receipt of the questionnaire, AT&T will determine whether there is sufficient AT&T central office space and site support services to meet the request contained in BellSouth's questionnaire. AT&T will notify BellSouth in writing within thirty (30) business days whether there is sufficient AT&T central office space available for each such request.

5. Upon receiving written notification of the availability of AT&T central office space from AT&T, BellSouth will provide written verification that it still requires such AT&T central office space. This written notification is BellSouth's firm order for each AT&T central office space requested, and will constitute an executed Space License under the terms of this Exhibit B.

6. The rates and charges are to be negotiated by the Parties.

7. AT&T agrees to provide site support services as follows:

7.1 AT&T will design, engineer, furnish, install, and maintain cable racks for BellSouth's use.

7.2 AT&T will design, engineer, furnish, install, and maintain a battery distribution fuse board ("BDFB") from which AT&T will supply DC power to BellSouth.

7.3 AT&T will provide common use convenience outlets (120V) as required for test equipment, etc. within Equipment Space.

7.4 AT&T will maintain temperature and humidity conditions for the Equipment Space within substantially the same ranges that AT&T maintains for its own similar equipment.

8. AT&T will provide the amount of space requested by BellSouth unless AT&T reasonably determines the quantity of space requested is not available. If the amount of requested space is not available, AT&T will specify the dimensions of the Equipment Space available and will specify any physical or space separation requirements. If the amount

BellSouth's Proposal

of space requested is available, AT&T will provide the location of the space and will specify any physical or space separation requirements.

9. For the purpose of performing work for which BellSouth is responsible under this Exhibit B, AT&T licenses BellSouth to enter and exit the Equipment Space through portions of the AT&T central office as designated by AT&T. Unless a service outage is occurring or appears to be imminent, BellSouth shall perform its work in the AT&T central office during regular business hours as designated from time to time by AT&T. BellSouth and AT&T will establish contact lists and procedures for after hours entry to the AT&T central office.

10. BellSouth will provide a twenty-four (24) hour local or toll free telephone number which AT&T can use to verify the authority of such personnel to enter the Equipment Space. BellSouth shall furnish to AT&T, and keep current, samples of the identifying credentials to be carried by all BellSouth employees authorized to enter the Equipment Space. Notwithstanding Section 10 of the General Terms and Conditions of this Agreement, incorporated herein by this reference, or except in the case of willful misconduct or gross negligence on the part of AT&T, BellSouth hereby releases AT&T, AT&T's Affiliates and their officers, directors, employees, agents, contractors, and suppliers from liabilities arising from the acts or omissions of any person who possesses a BellSouth employee identification badge and who was verified and admitted by AT&T.

11. While in the AT&T central office, employees of BellSouth and its contractors must comply at all times with AT&T's security and safety procedures and requirements. AT&T may refuse entry to, or require the departure of, any person who is disorderly or who has failed to comply with AT&T's procedures and requirements after being notified of them.

12. **[~~BellSouth will be responsible for selecting its contractors and causing their compliance with this Exhibit B.~~] [OPEN-AT&T]**

13. Each Party shall cause its employees and contractors to act in a careful and workmanlike manner to avoid damage to the other Party's property and the property of others in and around AT&T's central office.

14. BellSouth's employees and contractors shall abide by the

BellSouth's Proposal

requirements of Section 5.10, Interference or Impairment, of Attachment 4, incorporated herein by this reference.

15. In addition to the Licensed Facilities, BellSouth may bring into the Equipment Space whatever tools and equipment necessary to install and maintain its equipment. BellSouth will be responsible for the care and safeguarding of all such items. BellSouth may not bring into the AT&T central office any of the following: wet cell batteries, explosives, flammable liquids or gases, alcohol, controlled substances, weapons, cameras, tape recorders, and similar items.

16. AT&T and its designees may inspect or observe the Equipment Space, the space designated by AT&T for BellSouth transmission cable, the Licensed Facilities, and any work performed by or behalf of BellSouth in the AT&T central office, at any time. If the Equipment Space is surrounded by a security enclosure, BellSouth shall furnish AT&T with all mechanisms and information needed for entry to the Equipment Space.

17. AT&T and BellSouth intend that the Licensed Facilities, whether or not physically affixed to the AT&T central office, shall not be construed to be fixtures. BellSouth (or the lessor of BellSouth equipment, if applicable) will report the Licensed Facilities as its personal property wherever required by applicable laws, and will pay all taxes levied upon the Licensed Facilities.

18. BellSouth agrees not to sell, convey, or lease BellSouth transmission cable under any circumstances, except for a conveyance of BellSouth transmission cable to AT&T or to another space licensee upon termination of the applicable Space License. BellSouth further agrees not to cause, suffer, or permit BellSouth transmission cable to become encumbered by a lien, trust, pledge, or security interest as a result of rights granted by BellSouth or any act or omission of BellSouth. If BellSouth transmission cable becomes so encumbered, BellSouth agrees to discharge the obligation within thirty (30) days after receiving notice of the encumbrance.

19. The licenses granted by this Agreement are non-exclusive personal privileges allowing BellSouth to situate the Licensed Facilities in the locations indicated by AT&T. These licenses and the payments by BellSouth under this Agreement do not create or vest in BellSouth (or in any other person) any property right or interest of any nature in any

BellSouth's Proposal

part of the AT&T central office.

20. The licenses granted to BellSouth under this Agreement shall be subordinate to any mortgages or deeds of trust that may now exist or may in the future be placed upon any AT&T central office; to any and all advances to be made under such mortgages or deeds of trust; and to the interest thereon and all renewals, replacements, or extensions thereof.

21. AT&T may relocate the licensed space, or the AT&T central office, or both upon thirty (30) days prior written notice to BellSouth. If relocation of Licensed Facilities is required, the party that originally installed such Licensed Facilities will be responsible for relocating them. Any such relocation work that is AT&T's responsibility and is performed by AT&T will be without charge to BellSouth. AT&T will reimburse BellSouth for the reasonable cost of such relocation work performed by BellSouth, and AT&T will provide at its own expense any additional or replacement cable racks and BellSouth transmission cable needed to accommodate the relocation of the installation. AT&T and BellSouth will work together in good faith to minimize any disruption of service in connection with such relocation.

22. Licensed Facilities will be furnished, installed and maintained in accordance with the following:

22.1 BellSouth agrees to furnish all Licensed Facilities.

22.2 BellSouth agrees to install the Licensed Facilities. BellSouth agrees to comply with specifications and processes furnished by AT&T for installation performed by BellSouth.

22.3 BellSouth agrees to install the DC power supply and single circuit (battery and ground) from its fuse panel located in BellSouth's frame to the designated AT&T power source. BellSouth will distribute the power among its equipment within the Equipment Space.

22.4 [BellSouth agrees to maintain in good working order all BellSouth equipment in Equipment Space. AT&T agrees to repair BellSouth transmission cable. BellSouth is not permitted to repair installed BellSouth transmission cable in order to avoid possible harm to other transmission cables.] [OPEN-AT&T]

BellSouth's Proposal

22.5 **[BellSouth may use contractors to perform installation and maintenance for which BellSouth is responsible. AT&T consents to use of those contractors listed on a then current AT&T approved list of BellSouth submitted contractors. Use of any other contractors shall require AT&T's prior written consent, which shall not be unreasonably withheld.] [OPEN-AT&T/BST]**

22.6 BellSouth may, at its own discretion and expense, choose to install its equipment in locked cabinets, provided that space and configuration will permit such. If BellSouth chooses to install its equipment in locked cabinets, BellSouth shall leave the appropriate keys with AT&T and agrees to allow AT&T the right of entry to such cabinets.

23. Under the Space Licenses, AT&T performs no communications services, provides no goods except for short lengths of wire or cable and small parts incidental to the services furnished by AT&T, and provides no maintenance for any BellSouth equipment in Equipment Space. AT&T warrants that the services provided under this Agreement will be performed in a workmanlike manner and in accordance with AT&T technical specifications and that the incidental material provided by AT&T shall be free from defects. AT&T MAKES NO OTHER WARRANTIES, EXPRESS OR IMPLIED, AND SPECIFICALLY DISCLAIMS ANY WARRANTIES OF MERCHANTABILITY OR FITNESS FOR A PARTICULAR PURPOSE.

24. In addition to any other rights or remedies that AT&T may have under this Agreement or at law, AT&T may terminate the applicable Space License if any of the following events occurs and is not corrected within thirty (30) days after written notice to cure:

24.1 BellSouth fails to pay charges due or fails to comply with any of the terms or conditions of this Exhibit B.

24.2 BellSouth fails to comply with applicable laws or is in any way prevented by the order or action of any court, or other governmental entity from performing any of its obligations under this Exhibit B.

25. In the event that a Space License is terminated for any reason, the Parties will act in accordance with the following:

25.1 Within thirty (30) days after termination of a Space License, BellSouth will, at its sole expense, remove all BellSouth equipment in Equipment

BellSouth's Proposal

Space and restore the Equipment Space to its previous condition, normal wear and tear excepted. If BellSouth fails to complete such removal and restoration within thirty (30) days after termination of the applicable Space License, AT&T may, at its option, upon ten (10) days written notice to BellSouth, perform the removal and restoration at BellSouth's sole risk and expense.

25.2 Because removal of installed BellSouth transmission cable may cause damage to other cables or fiber, BellSouth agrees to relinquish or transfer its transmission cable to AT&T or to another AT&T space licensee in lieu of removal. Upon termination of the applicable Space License, unless transferred to another AT&T space licensee, all BellSouth transmission cable will be automatically conveyed to AT&T, thereby becoming the property of AT&T, free of any interest or lien of any kind by BellSouth (or by any person claiming through BellSouth). At AT&T's request, BellSouth will promptly execute and deliver to AT&T a bill of conveyance or such other assurances as may be requisite to confirm or perfect the transfer of BellSouth transmission cable to AT&T.

25.3 If no monies are owed by BellSouth to AT&T under this Agreement, AT&T agrees to deliver such removed equipment to BellSouth's last known business address or to a domestic location designated by BellSouth, at BellSouth's sole risk and expense.

BellSouth Proposal

Preferred Interconnection Architecture

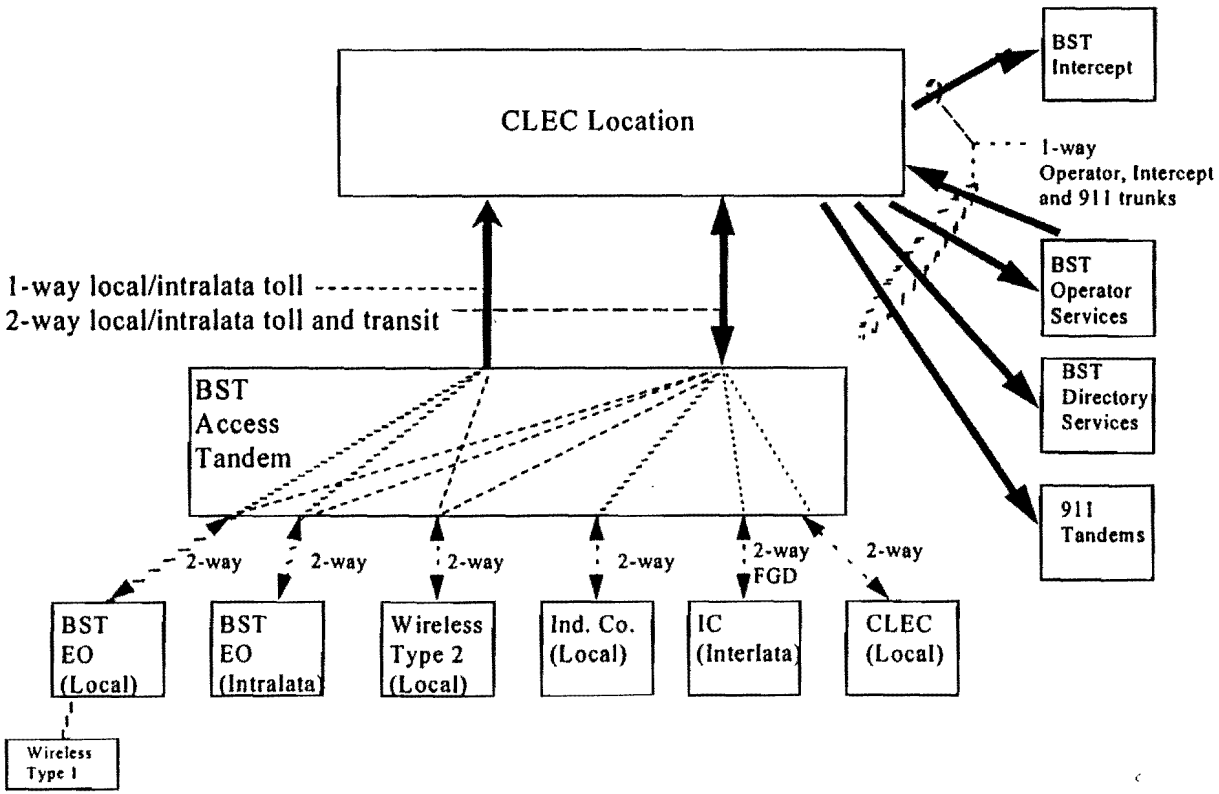

BellSouth Proposal
One Way Trunking Interconnection

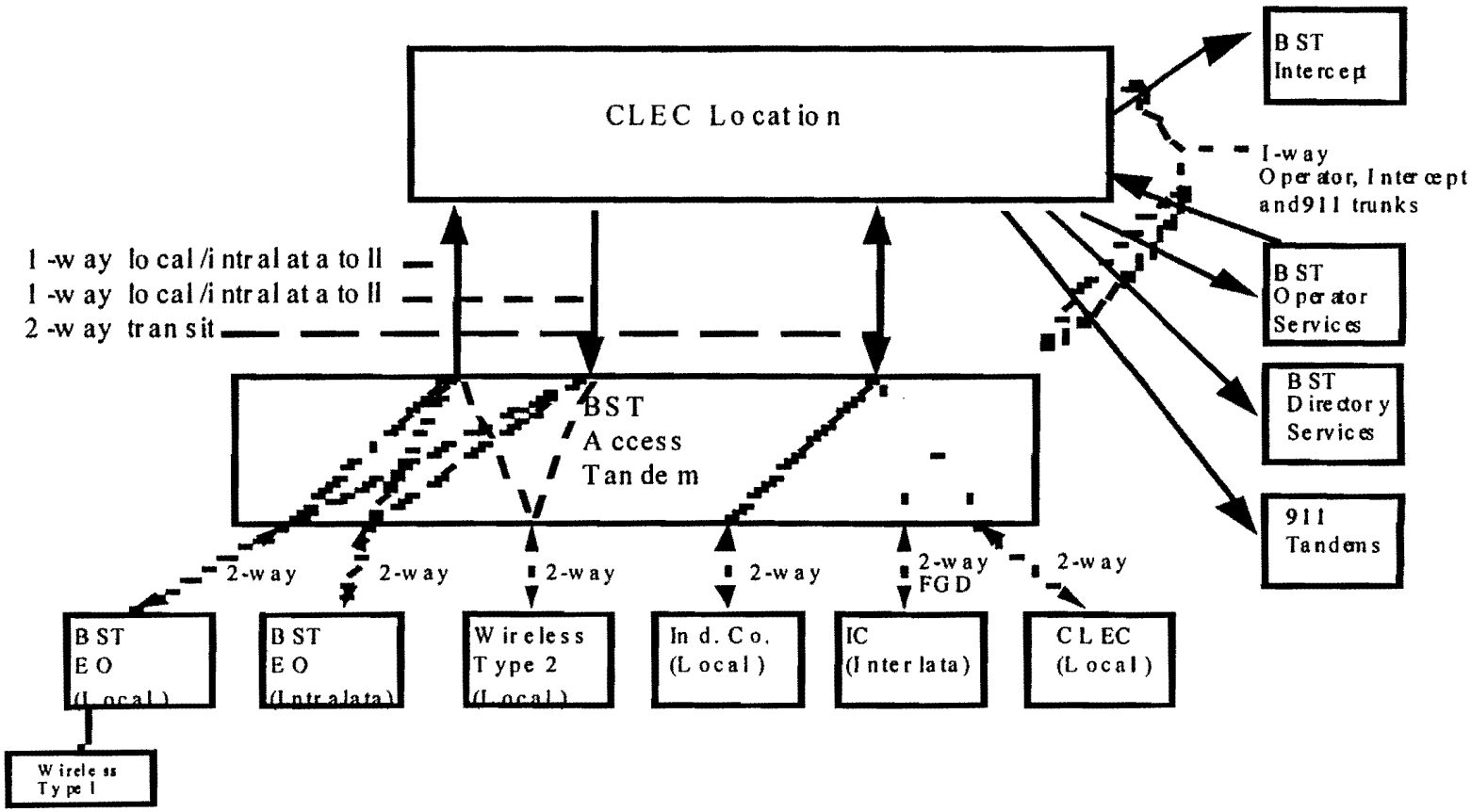

BellSouth Proposal
Two Way Trunking Interconnection

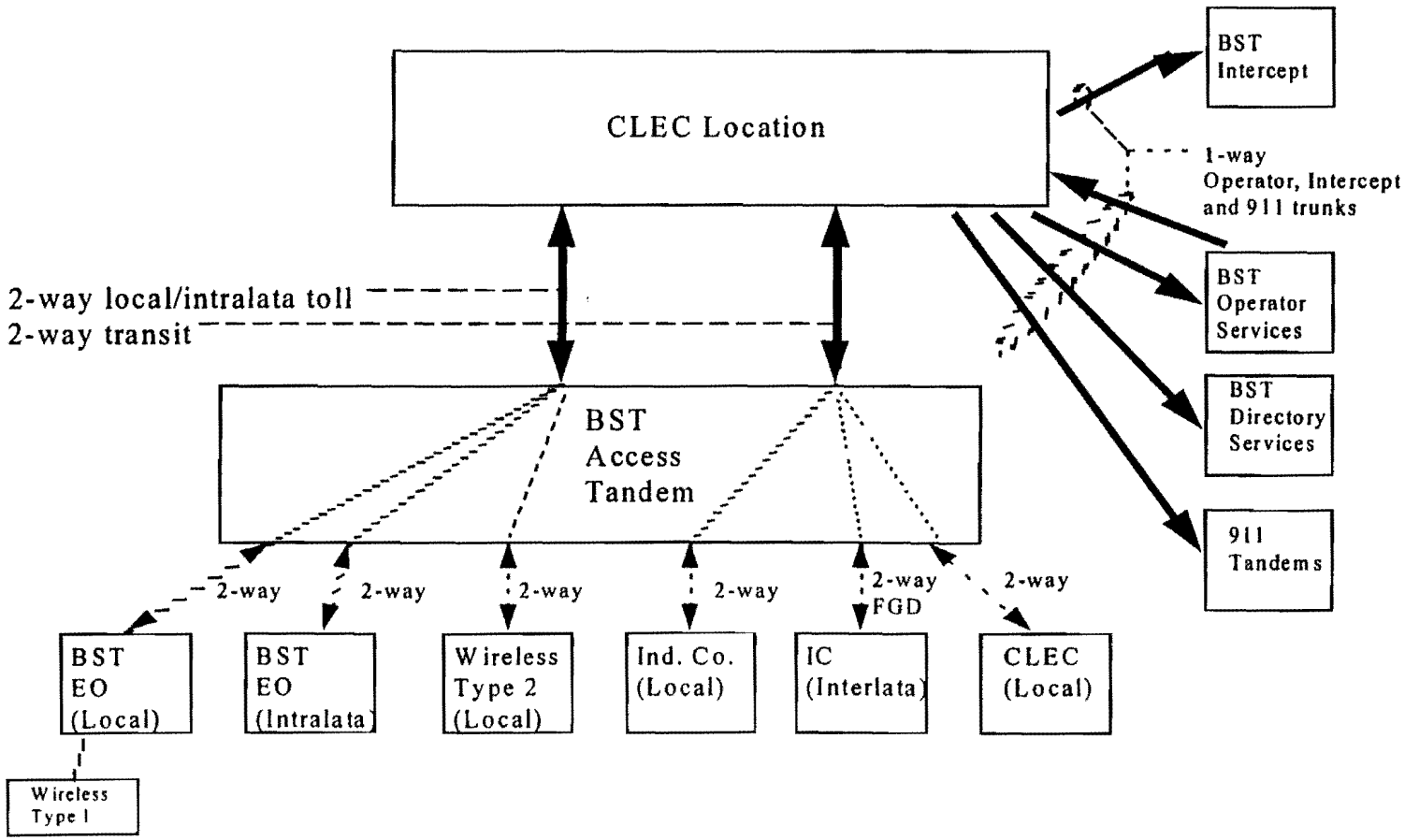

BellSouth Proposal
SuperGroup Interconnection Architecture

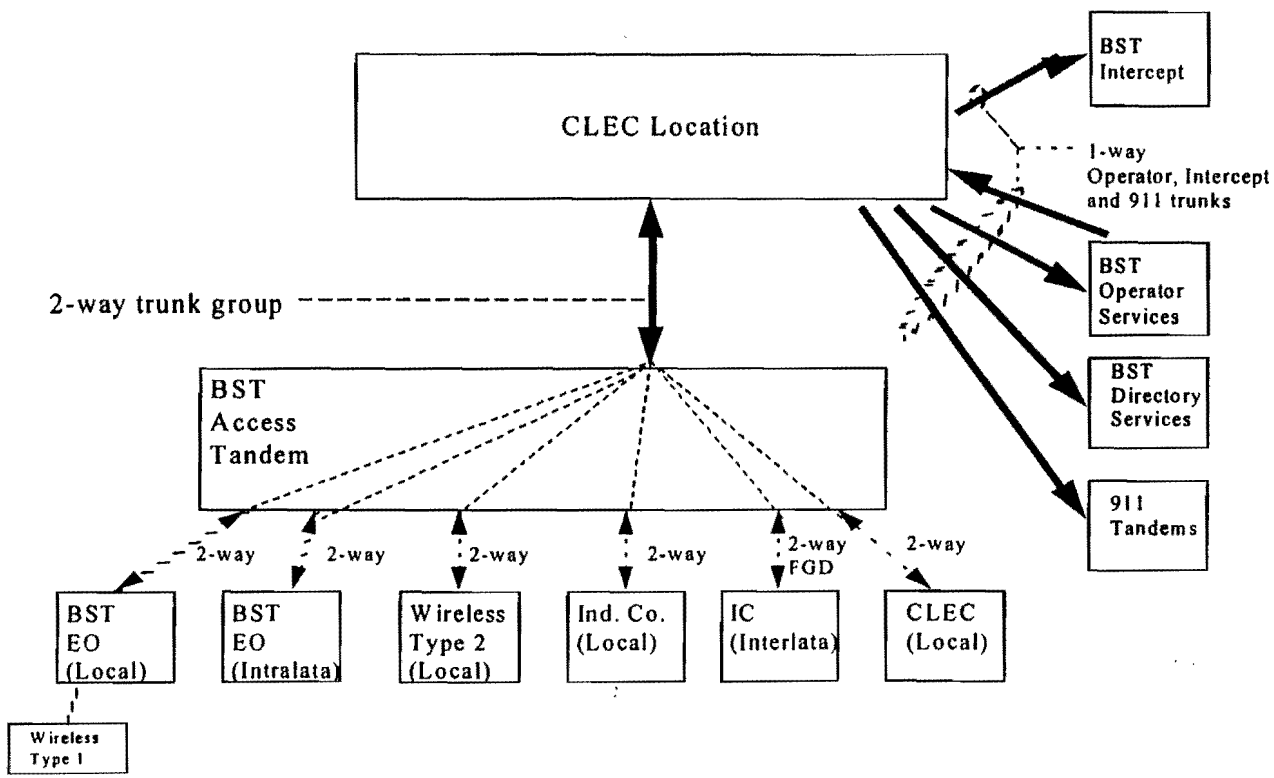

BEFORE THE FLORIDA PUBLIC SERVICE COMMISSION

Petition by AT&T Communications of the Southern States, Inc. and TCG South Florida for arbitration of certain terms and conditions of a proposed agreement with BellSouth Telecommunications, Inc. Pursuant to 47 U.S.C. § 252.	)	Docket No. 000731-TP Filed: 07/11/00

BELLSOUTH TELECOMMUNICATIONS, INC.'S RESPONSE TO AT&T COMMUNICATIONS OF THE SOUTHERN STATES, INC.'S PETITION FOR ARBITRATION

Pursuant to 47 U.S.C. § 252(b)(3), BellSouth Telecommunications, Inc. ("BellSouth"), responds to the Petition for Arbitration filed by AT&T Communications of the Southern States, Inc. and TCG South Florida (collectively "AT&T") and shows as follows:

INTRODUCTION

Sections 251 and 252 of the Telecommunications Act of 1996 ("1996 Act") encourage negotiations between parties to reach local interconnection agreements. Section 251(c)(1) of the 1996 Act requires incumbent local exchange companies to negotiate the particular terms and conditions of agreements to fulfill the duties described in Sections 251(b) and 251(c)(2-6).

Since passage of the 1996 Act on February 8, 1996, BellSouth has successfully conducted negotiations with numerous alternative local exchange companies ("ALECs") in Florida. To date, the Florida Public Service Commission ("Commission") has approved numerous agreements between BellSouth and ALECs. The nature and extent of these agreements vary depending on the individual needs of the companies, but the conclusion is inescapable – BellSouth has a record of embracing competition and displaying willingness to compromise and interconnect on fair and reasonable terms.

FLORIDA PUBLIC SERVICE COMMISSION
DOCKET NO. 020919-TP EXHIBIT NO. 18
COMPANY/ WITNESS: BS's Response to Petition
DATE: 05-07-03

As part of the negotiation process, the 1996 Act allows a party to petition a state commission for arbitration of unresolved issues.[1] The petition must identify the issues resulting from the negotiations that are resolved, as well as those that are unresolved.[2] The petitioning party must submit along with its petition "all relevant documentation concerning: (1) the unresolved issues; (2) the position of each of the parties with respect to those issues; and (3) any other issue discussed and resolved by the parties."[3] A non-petitioning party to a negotiation under this section may respond to the other party's petition and provide such additional information as it wishes within 25 days after the Commission receives the petition.[4] The 1996 Act limits the Commission's consideration of any petition (and any response thereto) to the unresolved issues set forth in the petition and in the response.[5]

BellSouth and AT&T entered into a three-year Interconnection Agreement ("Agreement") that expired on June 10, 2000. BellSouth and AT&T agreed to continue to operate pursuant to the terms of the Agreement until such time as a new interconnection agreement is approved. Although BellSouth and AT&T negotiated in good faith, the parties have been unable to reach agreement on some issues. As a result, AT&T filed its Petition for Arbitration.

Through the arbitration process, the Commission must resolve the unresolved issues ensuring that the requirements of Sections 251 and 252 of the 1996 Act are met. The obligations

---

1 47 U.S.C. § 252(b)(2).

2 *See generally,* 47 U.S.C. §§ 252 (b)(2)(A) and 252 (b)(4).

3 47 U.S.C. § 252(b)(2).

4 47 U.S.C. § 252(b)(3).

5 47 U.S.C. § 252(b)(4).

contained in those sections of the 1996 Act are the obligations that form the basis for negotiation, and if negotiations are unsuccessful, then form the basis for arbitration. Issues or topics not specifically related to these areas are outside the scope of an arbitration proceeding. Once the Commission has provided guidance on the unresolved issues, the parties must incorporate those resolutions into a final agreement to be submitted to the Commission for approval.[6]

1. BellSouth will respond to each issue identified in the Petition in a manner that will attempt to clearly reflect which unresolved issues remain to be arbitrated by the Commission. Attached to its Response, and incorporated herein by reference as fully as if set out in its entirety, BellSouth has included the following:

a. A revised matrix of the disputed issues. Based on a meeting of the parties held on May 18, 2000, BellSouth believes that AT&T and BellSouth have an agreed-upon statement of the issues, including the wording of the issues, for the Commission's consideration. BellSouth's revised matrix contains an accurate statement of BellSouth's position on each issue.

b. A copy of the true and correct Proposed Interconnection Agreement that indicates the areas of dispute and the areas of agreement. While AT&T filed what it styled as the "Proposed Interconnection Agreement," the parties agreed at the outset of the negotiations that BellSouth would maintain the official version of the interconnection agreement throughout negotiations. The version filed by AT&T with its Petition contains misstatements of the parties' agreement. Consequently, BellSouth has filed its Proposed Interconnection Agreement with its Response

[6] 47 U.S.C. § 252(a).

and proposes that the Commission use this Agreement for purposes of deliberation in this matter.

PARTIES

2. On information and belief, BellSouth admits the allegations set forth in Paragraph 2 of the Petition.

3. On information and belief, BellSouth admits the allegations set forth in Paragraph 3 of the Petition.

4. BellSouth admits the allegations in Paragraph 4 of the Petition.

JURISDICTION

5. In response to Paragraph 5 of AT&T's Petition, BellSouth admits that the Commission has jurisdiction over this matter. BellSouth further admits that AT&T formally requested negotiations with BellSouth on January 13, 2000, and that the Petition for Arbitration is timely filed. BellSouth also admits that the statutory deadline for resolution of this matter by the Commission is October 13, 2000.

STATEMENT OF THE CASE

6. In response to Paragraph 6 of AT&T's Petition, BellSouth states that the provisions of the 1996 Act, and the requirements and obligations set forth therein, speak for themselves and allegations concerning them require neither an admission nor a denial on the part of BellSouth. BellSouth certainly admits that one of the intended purposes of the 1996 Act is to promote competition, but denies any implication that such competition is limited to local exchange competition.

7. BellSouth denies the allegations in Paragraph 7 of the Petition. Specifically, BellSouth denies that "there still is little competition in Florida's local telephone market." To

the contrary, competition in Florida is thriving. As of February 1, 2000, BellSouth estimated that 113 different Florida ALECs were providing approximately 346,840 local exchange service lines to Florida business and residential customers. Twenty-four ALECs were providing service almost exclusively over their own facilities. Of those lines provided by facilities-based providers, BellSouth estimates that ALECs were providing approximately 23,634 local exchange lines to residential customers in Florida. On the other hand, however, BellSouth is certainly willing to admit that AT&T has done essentially nothing to advance local competition in Florida and specifically nothing to provide local residential telephone service to the citizens of Florida. BellSouth admits that four years have indeed passed since the 1996 Act was enacted, but states that AT&T has had an approved interconnection agreement in Florida, an agreement that AT&T signed, for approximately three years. Notwithstanding this, AT&T has done essentially nothing to bring alternative local telephone service to customers in Florida, and particularly residential customers. It's self-serving statement in paragraph 7 is just that, self-serving. It completely misstates what has happened in Florida and the progress that has been made, without any assistance from AT&T, in delivering alternative telephone service to Florida. With respect to the remaining allegations in Paragraph 7 of the Petition, BellSouth admits that its interconnection agreements comply with Sections 251 and 252 of the 1996 Act. BellSouth denies the remaining allegations in Paragraph 7 of the Petition. BellSouth specifically denies that its conduct has prevented AT&T (or any ALEC) from entering the residential local market. To the contrary, while AT&T has not chosen to compete in a meaningful way, numerous other ALECs, as described above, are participating in the local exchange market in Florida.

STANDARD OF REVIEW

8. BellSouth admits that the arbitration is governed by Sections 251 and 252 of the 1996 Act. By way of further response, BellSouth states that Sections 251 and 252 of the 1996 Act and the FCC's rules speak for themselves and therefore any allegations regarding these sections require neither an admission nor denial by BellSouth.

9. BellSouth denies that Section 251 of the 1996 Act requires BellSouth to provide combinations of elements at cost-based rates. Rather, Section 251 obligates BellSouth to provide currently combined combinations at cost-based rates. As for the remainder of AT&T's allegations in Paragraph 9, BellSouth states that the 1996 Act speaks for itself and any allegations by AT&T regarding the 1996 Act require neither admission nor denial.

THE NEGOTIATIONS

10. BellSouth admits the allegations in Paragraph 10 of the Petition.

11. BellSouth admits the allegations in Paragraph 11 of the Petition. By way of further response, BellSouth states that the parties have met a myriad of times in an effort to renegotiate the agreement.

12. BellSouth admits the allegations in Paragraph 12 of the Petition.

13. BellSouth is without sufficient knowledge or information to admit or deny the allegations in Paragraph 13 of the Petition, and therefore denies the same. By way of further response, BellSouth states that at the outset of the negotiations, the parties agreed that BellSouth would maintain the official version of the Agreement and would be responsible for incorporating changes and updates to the draft. In an effort to present the Commission with the most accurate information available, BellSouth has attached the most up-to-date version of the official draft

Agreement. As set forth above, BellSouth also has attached and incorporated herein by reference as fully as if set out in its entirety, a revised matrix for the Commission's review.

ISSUES IN DISPUTE

14. BellSouth admits that the parties have reached resolution on a substantial number of issues. BellSouth denies the remaining allegations in Paragraph 14 of the Petition. BellSouth specifically denies that it has failed in any way to comply with Commission orders or directives. BellSouth sets forth all of the issues it believes remain unresolved, as well as its and AT&T's positions on those issues, in Attachment 1.

REQUESTED COMMISSION ACTION

15. BellSouth admits that the Commission should establish a procedural order for the arbitration, and should arbitrate the unresolved issues between AT&T and BellSouth within the timetable specified in the 1996 Act. BellSouth denies any remaining allegations in Paragraph 15 of the Petition.

16. Any allegations contained herein not specifically admitted are hereby denied.

WHEREFORE, BellSouth respectfully requests that the Commission enter an order in favor of BellSouth on each of the issues set forth herein, and grant BellSouth such other relief as the Commission deems just and proper.

Respectfully submitted, this 11th day of July, 2000.

BELLSOUTH TELECOMMUNICATIONS, INC.

Nancy B. White
150 West Flagler Street
Suite 1910
Miami, Florida 33130
(305) 347-5558

R. Douglas Lackey
E. Earl Edenfield, Jr.
Lisa S. Foshee
675 West Peachtree Street, Suite 4300
Atlanta, Georgia
(404) 335-0754

217913

ATTACHMENT 1
Issues for Arbitration between AT&T and BellSouth
FPSC Docket No. 000731-TP

	Issue	AT&T Position	BellSouth Position
1.	Should calls to Internet service providers be treated as local traffic for the purposes of reciprocal compensation?	ISP calls should be treated as local traffic for purposes of reciprocal compensation. AT&T still incurs the cost of the ISP traffic over its network. Additionally, such calls are treated as local under BellSouth's tariffs and the FCC has treated ISP traffic as intrastate for jurisdictional separation purposes.	No. The FCC has definitively determined that ISP traffic is interstate in nature. Therefore, such traffic should not be treated as local for purposes of reciprocal compensation. Alternatively, the parties should track the minutes of ISP traffic exchanged and true up the amount of compensation owed, if any, based on an effective rule promulgated by the FCC.
2.	What are the appropriate performance measurements and enforcement mechanisms that BellSouth should implement?	For AT&T to ensure its customers receive service equal in quality to received by BellSouth customers, BellSouth must establish that it offers non-discriminatory support for total service resale, use of unbundled network elements (UNE's), and access to OSS. BellSouth should be required to provide an effective performance measurement methodology that contains: - A comprehensive set of comparative measurements that provides for disaggregation of its data to permit meaningful comparisons and full disclosure. - Business rules and calculations which reveal true performance and customer experiences. - A sound methodology for establishing benchmarks and designating appropriate retail analogs. - Statistical procedures that balance the possibility of concluding BellSouth favoritism exists when it does not with concluding there is no BellSouth favoritism when there is. - AT&T access to all the raw data that BellSouth uses for its ALEC performance reporting. Further, BellSouth should adopt	The Service Quality Measurements proposed by BellSouth incorporate the measurements requested by telecommunications carriers such as AT&T and measurements adopted by state Commissions within the BellSouth region. These measurements, as well as the business rules utilized to calculate the measurements, represent a comprehensive look at the service provided to telecommunications carriers. BellSouth provides access to the raw data utilized to calculate the measurements and has worked hand in hand with AT&T and other telecommunications carriers in the development of an appropriate statistical methodology. BellSouth does not believe that the issue of appropriate, if any, enforcement mechanisms is an appropriate issue for arbitration and resolution by this Commission. Without waiving its right to assert its legal position, BellSouth has voluntarily proposed enforcement mechanisms for inclusion in the AT&T/BellSouth Interconnection Agreement. The proposed enforcement mechanisms include the key, outcome oriented service quality

		an appropriate system of self-enforcing consequences to assure that the competitive local telecommunications markets envisioned by the 1996 Act will be able to develop and survive. The consequences must provide BellSouth with incentives sufficient to prevent BellSouth from inhibiting competition through discriminatory treatment of ALECs. Such consequences must be immediately imposed upon a demonstration of poor BellSouth performance. A self-enforcing system of consequences is needed to assure that BellSouth has appropriate incentives to comply, on an ongoing basis, with its Section 251 obligations to provide ALECs with non-discriminatory support regardless of whether a section 271 application has been made or approved. AT&T proposes the AT&T Performance Incentive Plan as the enforcement mechanism.	measures required by this Commission and include either benchmarks or retail analogs as standards. The mechanisms are designed to prevent BellSouth from backsliding on delivery of service to AT&T once BellSouth has attained interLATA authority from the FCC. The remedies proposed are meaningful remedies designed to be, if applied, of significant impact to BellSouth.
3.	Should BellSouth be required to adopt validation and audit requirements which will enable AT&T to assure the accuracy and reliability of the performance data BellSouth provides to AT&T, and upon which the FPSC will ultimately rely when drawing conclusions about whether BellSouth meets its obligations under the Act?	BellSouth should be required to have an independent audit conducted of its performance measurement systems, paid for by BellSouth. Additional annual audits should be conducted and paid for 50% by BellSouth and 50% among the ALECs participating in the audit. Additionally, AT&T may request additional audits when performance measures are changed or added, to be paid for by BellSouth. Additionally, audits of individual measures should be conducted. The cost of a "mini-audit" shall be paid by AT&T unless the audit determines that BellSouth is not in compliance with the terms of the Agreement.	BellSouth will agree to undergo a comprehensive audit of the aggregate level reports for both BellSouth and the ALECs for each of the next five (5) years (2000-2005), to be conducted by an independent third party. The results of that audit will be made available to all the parties subject to proper safeguards to protect proprietary information. This aggregate level audit includes the following specifications: (1) the cost shall be borne 50% by BellSouth and 50% by the ALECs; (2) the independent third party auditor shall be selected with input from BellSouth, the Commission and the ALECs; and (3) BellSouth, the Commission and the ALECs shall jointly determine the scope of the audit. More frequent audits are not reasonable in view of the tremendous number of ALEC interconnection agreements into which BellSouth has entered.
4.	What does "currently combines" mean as that phrase is used in 57 C.F.R. §51.315(b)?	The Commission should allow AT&T to provide telecommunications services to any customer using any	In the FCC's Third Report and Order, the FCC confirmed that BellSouth presently has no obligation to combine network

		combination of elements that BellSouth routinely combines in its own network and to purchase such combinations at TELRIC rates. BellSouth should not be allowed to restrict AT&T from purchasing and using such combinations to only provide service to customers who currently receive retail service by means of the combined elements. This is the only interpretation of the term "currently combines" that is consistent with the nondiscrimination policy of the Act and which will promote rapid growth in competition in the local telephone market.	elements for ALECs when those elements are not currently combined in BellSouth's network. The FCC rules, 51.315(c)-(f), that purported to require incumbents to combine unbundled network elements were vacated by the Eighth Circuit Court of Appeals and were not appealed to or reinstated by the Supreme Court. The question of whether those rules should be reinstated is pending before the Eighth Circuit, and the FCC explicitly declined to revisit those rules at this time. Third Report and Order, ¶ 481. The FCC also confirmed that when unbundled network elements, as defined by the FCC, are currently combined in BellSouth network, BellSouth cannot separate those elements except upon request. 47 C.F.R. § 51.315(b). For example, when a loop and a port are currently combined by BellSouth to serve a particular customer, that combination of elements must be made available to ALECs. According to the FCC, requesting carriers are entitled to obtain such combinations "at unbundled network element prices." Id. at ¶ 480. There is no legal basis for the FPSC to adopt an expansive view of "currently combined" so as to obligate BellSouth to combine elements for ALECs. As the FCC made clear in its Third Report and Order, Rule 51.315(b) applies to elements that are "in fact" combined. See id. ¶ 480 ("To the extent an unbundled loop is in fact connected to unbundled dedicated transport, the statute and our rule 51.315(b) require the incumbent to provide such elements to requesting carriers in combined form"). The FCC declined to adopt the definition of "currently combined," that would include all elements "ordinarily combined" in the incumbent's network. Id.

			(declining to "interpret rule 51.315(b) as requiring incumbents to combine unbundled network elements that are 'ordinarily combined'…").
5.	Should BellSouth be permitted to charge AT&T a "glue charge" when BellSouth combines network elements?	BellSouth should not impose any additional charge on AT&T for any combination of network elements above the TELRIC cost of the combination.	See BellSouth's response to Issue 4, which is incorporated herein by reference as fully as if set out in its entirety.
6.	Under what rates, terms, and conditions may AT&T purchase network elements or combinations to replace services currently purchased from BellSouth tariffs? (UNEs, Attachment 2, Section 2.11)	Pursuant to FCC Orders, AT&T is permitted to purchase network elements and combinations to replace services currently purchased from BellSouth tariffs. The price to purchase network elements and combinations in such situations should be the TELRIC cost to do a record change in BellSouth's OSS, plus the recurring price of the appropriate network elements or combinations. BellSouth should not be permitted to place obstacles in the way of AT&T's ability to convert such services to network elements and combinations as easily and seamlessly as possible. Appropriate terms and conditions must also be ordered to ensure that AT&T is able to replace services with network elements/combinations of network elements.	Without waiver of its ability to avail itself of any available legal remedies, and in conformance to the guidelines set forth by the FCC in CC Docket No. 96-98 UNE Remand Orders dated Nov. 5, 1999 and Nov. 24, 1999, BellSouth will convert services currently purchased on a month to month basis by AT&T, or a BellSouth end user changing its service provider to AT&T, to the extent possible on a mechanized basis at a record change charge. As to services provided to AT&T or to a BellSouth end user changing its service provider to AT&T under a volume and term agreement or other contract basis, BellSouth will convert the services to the UNEs ordered by AT&T upon AT&T's payment of the appropriate early termination liabilities set forth in the volume and term agreement or contract.
7.	How should AT&T and BellSouth interconnect their networks in order to originate and complete calls to end-users? (Local Interconnection, Attachment 3)	AT&T and BellSouth should interconnect on an equitable basis, which is hierarchically equivalent, and not maintain the imbalanced situation where AT&T incurs the expense of connecting throughout BellSouth's network, while BellSouth incurs the much lower cost of connecting at the edge of AT&T's network. AT&T's proposal also avoids use of limited collocation space that is better used for other purposes such as interconnection to UNE loops and advanced services. AT&T's proposal requires the two parties to work out a transition plan to "groom" the two networks.	BellSouth offers interconnection in compliance with the requirements of the FCC rules and regulations as well as any state statute or regulation. Interconnection can be through delivery of facilities to a collocation or fiber meet arrangement or through the lease of facilities. Interconnection for AT&T originated traffic must be accomplished through at least one interface within the BellSouth LATA and may be at an access tandem or local tandem. BellSouth, at its option, may designate one or more interfaces on its network for the delivery of its originating traffic to AT&T. BellSouth should not be required to incur additional unnecessary cost as a result of the selection of interconnection

			points by AT&T. If AT&T requires BellSouth to haul BellSouth originating traffic from the originating local calling area to a point of interconnection outside that local calling area, AT&T should compensate BellSouth for its transport costs.
8.	What terms and conditions, and what separate rates if any, should apply for AT&T to gain access to and use BellSouth facilities to serve multi-unit installations?	BellSouth should cooperate with AT&T, upon request, in establishing a single point of interconnection on a case-by-case basis at multiunit installations. Where such points of interconnection do not exist, BellSouth should construct such points of interconnection and AT&T should be charged no more than its fair share, as one service provider using this facility, of the forward-looking price. The single point of interconnect should be fully accessible by AT&T technicians with the necessity of having a BellSouth technician present.	Without waiver of its ability to avail itself of any available legal remedies, BellSouth will perform in conformance with the guidelines of 47 CFR §51.319(a)(2)(E) as set forth by the FCC in CC Docket No. 96-98 UNE Remand Order.
9.	Should BellSouth provide local circuit switching at UNE rates to allow AT&T to serve the first three lines provided to a customer located in Density Zone 1 as determined by NECA Tariff No. 4 in effect on January 1, 1999 ("Density Zone 1")?	Yes. Customers should be allowed to freely choose their local service provider regardless of the number of lines that customer purchases. AT&T is entitled to purchase local circuit switching at UNE rates to provide service to customers in Density Zone 1 for the first, second, and third lines purchased by such customers even if those customers has four lines or more.	Without waiver of its ability to avail itself of any available legal remedies, BellSouth will perform in conformance with the guidelines of 47 CFR §51.319(c)(1)(B) as set forth by the FCC in CC Docket No. 96-98 UNE Remand Order. The FCC's rule is quite clear, if BellSouth satisfies the condition of providing nondiscriminatory access to the Enhanced Extended Link (EEL) throughout Density Zone 1 in a top 50 MSA, BellSouth is not required to unbundle local circuit switching when AT&T serves end users with 4 or more lines. Therefore, if the end user has 4 or more lines, is located in a top 50 MSA in Density Zone 1 and BellSouth provides access to an EEL, BellSouth does not have to provide circuit switching to AT&T.
10.	Should BellSouth preclude AT&T from purchasing local circuit switching from BellSouth at UNE rates when a Density Zone 1 existing AT&T customer with 1-3 lines increases its lines to 4 or	No. In a level competitive environment, customer services and rates should not be negatively impacted by BellSouth's election to increase AT&T's costs of providing local service simply because the customer adds a fourth line to its location.	See BellSouth's response to Issue 9, which is incorporated herein by reference as fully as if set out in its entirety. Once an end user has four lines to the location, AT&T is not entitled to purchase local switching at UNE rates from BellSouth to provide any lines to that end user,

	more? (UNEs, Attachment 2, Section 6.3.1.3 and 6.3.1.4)		regardless of whether it is line 1, 2, 3, or 4.
11.	Should BellSouth be allowed to aggregate lines provided to multiple locations of a single customer to restrict AT&T's ability to purchase local circuit switching at UNE rates to serve any of the lines of that customer? (UNEs, Attachment 2, Section 6.3.1.3 and 6.3.1.4)	No. The total number of lines served to all of the customers locations should not be aggregated. If a customer, for example, has several locations, each served by 3 lines or less, AT&T should be entitled to purchase local circuit switching from BellSouth to serve each of the locations.	Yes. All of the lines provided to an end-user customer, including those at every end user location (where an end user has multiple locations), can be aggregated to relieve BellSouth of its obligation to provide circuit switching at UNE rates. The rule is clear, if BellSouth has met the regulatory requirements and AT&T's customer has responsibility for 4 or more lines, all within the confines of Density Zone 1 in a top 50 MSA, BellSouth does not have a statutory obligation to provide AT&T with access to its circuit switching at 47 USC §252(d) rates.
12.	Should AT&T be permitted to charge tandem rate elements when its switch serves a geographic area comparable to that served by BellSouth's tandem switch? (Local Interconnection, Attachment 3, Section 1.3)	Yes. When AT&T's switches serve a geographic area comparable to that served by BellSouth's tandem switch, then AT&T should be permitted to charge tandem rate elements.	AT&T must demonstrate to the Commission that (1) its switch serves a comparable geographic area and (2) the switch performs functions similar to those performed by BellSouth's tandem switch. Simply being capable of serving a comparable geographic area or of performing tandem switching functions is not sufficient evidence.
13.	What are the appropriate means for BellSouth to provide unbundled local loops for provision of DSL service when such loops are provisioned on digital loop carrier facilities? (UNEs, Attachment 2, Section 3.11.2)	When existing loops are provisioned on digital loop carrier facilities, and AT&T requests such loops in order to provide xDSL service, BellSouth should provide AT&T with access to other loops or subloops so that AT&T may provide xDSL service to a customer.	In the case where an existing loop is provisioned on a BellSouth DLC facility, and the existing loop cannot provide xDSL capable service, BellSouth is not required to provide AT&T alternative loops to allow AT&T to provide service over that loop. AT&T would be required to purchase an xDSL capable loop through a separate and distinct ordering process.
14.	What coordinated cut-over process should be implemented to ensure accurate, reliable and timely cut-overs when a customer changes local service from BellSouth to AT&T? (UNEs, Attachment 2, Section 3.8 et seq.)	The coordinated cut-over process proposed by AT&T should be implemented to ensure accurate, reliable, and timely cut-overs. BellSouth's proposed process does not ensure that customers switching from BellSouth to AT&T receive the same treatment that BellSouth customers receive. Moreover, BellSouth does not follow its own process.	The coordinated cut over process proposed by BellSouth does ensure accurate, reliable and timely cut-overs. BellSouth's current SQMs measure BellSouth's performance in this area and sufficiently demonstrate that AT&T customers switching from BellSouth receive non-discriminatory treatment.
15.	Should AT&T local calls that use BellSouth's switching UNE be subject to "bill	Due to the complexities and expense of recording and billing for reciprocal compensation on UNE-switched calls, AT&T	When the end user of a facilities-based ALEC calls an AT&T local end user where AT&T is not providing its own facilities,

	and keep" compensation arrangement, even though reciprocal compensation will be paid for terminating local calls not using BellSouth's UNE switch? (Local Interconnection, Attachment 3, Section 4.10; Billing & Recording, Attachment 6, Section 2.1.6; Exhibit E and Attachment 3, Section 4.10)	believes that bill and keep should be used for local calls originated from and terminated to AT&T when it uses BellSouth's UNE switching. Other telecommunication carriers who originate or terminate calls to AT&T end-users served by UNE switching will be unable to determine that such calls went to AT&T as opposed to BellSouth. All call records will continue to look like they were made to BellSouth.	but rather is using a UNE-P purchased from BellSouth to terminate the call, BellSouth should be permitted to charge AT&T for the UNEs AT&T uses, and AT&T should then charge the originating ALEC reciprocal compensation for terminating the call for the ALEC (or enter into a bill and keep arrangement with the ALEC). When AT&T terminates a call using BellSouth's local switching, BellSouth will provide the necessary recorded information to enable AT&T the bill the other carriers the charges those carriers have incurred. When AT&T leases circuit switching from BellSouth AT&T is entitled to all revenues associated with terminating calls for other carriers and is obligated in turn to pay BellSouth for the network elements used.
16.	What is the appropriate treatment of outbound voice calls over internet protocol ("IP") telephony, as it pertains to reciprocal compensation? (Local Interconnection, Attachment 3, Section 6.1.9)	Until the FCC issues rules on how IP traffic is to be treated, no restrictions should be imposed. Further, there is no way to measure and record such traffic as requested by BellSouth. In any event, this is not a proper subject for negotiation in an interconnection agreement.	As with any other local traffic, reciprocal compensation should apply to local telecommunications provided via IP Telephony, to the extent that it is technically feasible to apply such charges. To the extent, however, that calls provided via IP Telephony are long distance calls, access charges should apply, irrespective of the technology used to transport them.
17.	In calculating Percent Local Usage (PLU) for purposes of reciprocal compensation, should AT&T be allowed to report the traffic on a monthly, rather than quarterly, basis? (Local Interconnection, Attachment 3, Section 6.1.11)	Yes. BellSouth should be required to continue its current practice of calculating the PLU on a monthly basis. As AT&T enters the local market, and local usage increases, it remains necessary that BellSouth not change the current practice which has been adequate to this point. BellSouth proposes changing to a quarterly basis, which AT&T opposes.	BellSouth offered to accept PLU reporting on an otherwise than quarterly basis (i.e., monthly) for a period of 12 months or until the PLU stabilizes when AT&T (1) gains a large customer whose addition would have an impact on the PLU; (2) opens a new calling area; or (3) begins marketing in a new area. Otherwise, PLU would be reported quarterly, which is consistent with industry practice.
18.	What are the appropriate intervals for the delivery of collocation space to AT&T? (Collocation, Attachment 4, Section 6.4) (AT&T anticipates that this issue will be	FCC rules require that BellSouth provide collocation within intervals no greater than the best practice intervals of other ILECS. Accordingly, BellSouth should provide collocation within the following intervals: (1) virtual and cageless: 60 calendar days;	BellSouth has proposed an interval of no greater than 100 calendar days for the provision of physical collocation arrangements under ordinary conditions. Such a proposal is reasonable and necessary.

	settled based on the FPSC's Order on Collocation in Docket Nos. 981834-TP and 990321-TP)	(2) Physical (caged): 30 calendar days if AT&T does the construction; 90 calendar days if BellSouth does the construction. In the event of unforeseen circumstances, BellSouth should apply to the FPSC for suspension of or relief from the intervals.	
19.	When AT&T and BellSouth have adjoining facilities in a building outside BellSouth's central office, should AT&T be able to purchase cross connect facilities to connect to BellSouth or other ALEC networks without having to collocate in BellSouth's portion of the building? (Collocation, Attachment 4, Section 1.6) (AT&T anticipates that this issue will be settled based on the FPSC's Order on Collocation in Docket Nos. 981834-TP and 990321-TP)	Yes. When BellSouth and AT&T facilities are in close proximity, in order to achieve network efficiency, AT&T should be able to cross connect its network directly from its space to BellSouth's space without having to purchase collocation space from BellSouth.	No. AT&T's proposal has the effect of expanding the definition of premises beyond that which is required by the FCC regulations or that which is necessary. AT&T simply wishes to take advantage of its former corporate ownership of BellSouth. BellSouth's agreement to AT&T's terms would cause BellSouth to provide AT&T with more favorable treatment than other new entrants.
20.	Is conducting a statewide investigation of criminal history records for each AT&T employee or agent being considered to work on a BellSouth premises a security measure that BellSouth may impose on AT&T? (Collocation, Attachment 4, Section 11.1, 11.2, 11.4, 11.5)	No. These requirements are unreasonable and are inconsistent with the examples of measures found by the FCC to be reasonable, e.g. ID badges, security cameras, cabinet enclosures, and separate central building entrances. Such requirements are excessive, increasing collocation costs without providing additional protection to BellSouth. Moreover, such requirements are discriminatory as applied to AT&T. Further, AT&T is willing to indemnify BellSouth, on a reciprocal basis, for any bodily injury or property damage caused by AT&T's employees or agents.	Yes. BellSouth performs criminal background checks on its employees prior to hiring and as such can require AT&T to do the same in order for AT&T to have unescorted access to the central offices and other premises that house the public switched network. Such security requirements are reasonable in light of the assets being protected as well as the number of new entrants and other telecommunications carriers relying on the integrity and reliability of BellSouth's network. AT&T's offer to indemnify BellSouth for bodily injury or property damage is not sufficient in light of the asset at risk.
21.	Unless otherwise specified, where Attachment 4 regarding collocation refers to days, should those days be calendar days or business days? (Collocation, Attachment 4) (AT&T	Days should be calendar days. Business day intervals are inherently longer and less predictable than calendar day interval thereby delaying delivery of collocation space within a reasonable timeframe.	Unless otherwise specified (for example, see BellSouth's response to Issue 18), days should be business days. Given the nature and complexity of the tasks to be completed, business days are reasonable.

	anticipates that this issue will be settled based on the FPSC's Order on Collocation in Docket Nos. 981834-TP and 990321-TP)		
22.	What are the appropriate recurring and non recurring charges for the collocation items for which charges have not been established or are not TELRIC compliant as listed in Exhibit A to Collocation, Attachment 4 of AT&T's Proposed Interconnection Agreement. (Collocation, Attachment 4 and Exhibit A)	The FCC's TELRIC pricing rules require that BellSouth charge no more for any collocation than the TELRIC cost of collocation.	The appropriate rate is a cost-based rate calculated pursuant to a final, commission-approved methodology.

23.	Has BellSouth provided sufficient customized routing in accordance with State and Federal law to allow it to avoid providing Operator Services/Directory Assistance ("OS/DA") as a UNE?	No. BellSouth does not provide AT&T adequate customized routing. BellSouth has not provided sufficient information on its untested AIN solution, including rates. If BellSouth's proposal is line class codes ("LCC's"), this solution may not be viable in every central office. Thus, until these methods are proven viable, AT&T may purchase OS/DA as an unbundled network element.	Yes. BellSouth has available both an AIN solution for customized routing as well as the LCC solution that was advocated by AT&T during the last round of arbitrations. AT&T participated in testing BellSouth's AIN customized routing solution.
24.	Should BellSouth be required to electronically process and provision customer specific orders for OS/DA if AT&T orders on unbranded or AT&T branded platform? (Attachment F, Sections 3.20 – 3.24)	Yes. BellSouth should process and provision AT&T's customer specific orders at parity with BellSouth's processing and provisioning of its own customer orders.	See BellSouth's response to Issue 23, which is incorporated herein by reference as fully as if set out in its entirety. However, should the Commission resolve Issue 23 in AT&T's favor, BellSouth will only provide electronic processing and provisioning of AT&T's OS/DA orders to a BellSouth branded platform. Orders for an unbranded or AT&T branded platform must be processed manually. Any proposed electronic ordering methodology should be handled through the EICCP, not through an arbitration proceeding.
25.	What procedure should be established for	BellSouth should accept from AT&T two types of orders, 1) an	BellSouth has proposed a procedure whereby AT&T can

	AT&T to obtain loop-port combinations (UNE-P) using both Infrastructure and Customer Specific Provisioning? (Attachment 7, Sections 3.20 – 3.24)	Infrastructure Provisioning Order and 2) a Customer Specific Provisioning Order. The Infrastructure Provisioning Order (which consists of an Infrastructure Footprint Form and an Operator Services and Directory Assistance Questionnaire) notifies BellSouth of the common use of Network Elements and Combinations that AT&T will require geographically by End Office, Rate Center, LATA or State. The Footprint Order should be acknowledged within 24 hours and responded to within 5 business days thereafter. The Customer Specific Provisioning Order should be the LSR. LSRs for UNE-P should be received electronically, provided with ordering flow-through and provisioned at parity with BellSouth retail. Electronic LSRs with flow through ordering should be available for orders using either an unbranded or an AT&T branded platform.	order loop/port combinations using BellSouth OS/DA platform and AT&T branding. BellSouth is not opposed to AT&T making a one-time designation to BellSouth to have all of AT&T's end user calls routed to the appropriate OS/DA platform. AT&T, however, refuses to make a single designation and seeks instead a variety of OS/DA routing plans. Therefore, AT&T should be required to populate the appropriate line class code on the LSR submitted to the LCSC. If AT&T decided upon, and communicated, a single OS/DA routing plan, then BellSouth could determine the appropriate line class code and AT&T would not be required to provide such code on the LSR. AT&T will not, however, make such a designation.
26.	May the Interconnection Agreement contain conditions on the purchase of any BellSouth exchange?	The rates, terms, and conditions of this Agreement should govern the relationship between AT&T and the third party purchaser. BellSouth should not be permitted to remove the benefits of competition from a territory by selling it to another party that may assert a rural exemption or undermine AT&T's investment in competition by changing the rules. Further, AT&T should not be faced with the uncertainty of negotiating a completely new set of terms and conditions with another provider who purchases a BellSouth local exchange. Similarly, the FPSC should not be required to review new sets of terms and conditions each time there is a sale of a local exchange.	The contract language proposed by AT&T is unduly burdensome on BellSouth and any prospective purchaser of a BellSouth exchange. The requirements of the Act, specifically 47 U.S.C. § 251(h), should apply.
27.	Should the Commission or a third party commercial arbitrator resolve disputes under the Interconnection Agreement?	More issues will arise now that AT&T is entering the market and will need to be resolved quickly. These issues will be more business oriented and less policy oriented, and thus, more appropriately handled by commercial arbitrators. The parties should continue to have the right to resolve operational	BellSouth has had experience with commercial arbitration in the resolution of disputes under interconnection agreements negotiated pursuant to 47 USC §252 and has found such arbitration to be expensive and unduly lengthy in nature. The 8th Circuit Court of Appeals, in Iowa Utilities Bd., ruled that the

		issues in a commercial forum on an expedited basis; thereby, limiting the customer-affecting impact of any such disputes.	Commission is charged with the authority to resolve disputes relating to interconnection agreements and BellSouth should not be forced to waive its right to seek resolution of such issues before the Commission.
28.	What is the proper timeframe for either party to render bills for overdue charges? (Billing & Recording, Attachment 6, Section 1.2.3)	BellSouth should be required to continue its current practice of not rendering bills for charges more than one year old. BellSouth does not render bills to its own retail customers for charges more than one year old and BellSouth should not bill AT&T, as a wholesale customer, any differently.	BellSouth should not be required by contract to waive its statutory right to collect charges for services provided but for which payment has not been received at any point during the applicable statute of limitations. Of course, such time period would also extend to AT&T's right to complain about a billing.
29.	What are the proper parameters sufficient to prevent fraudulent billing for reciprocal compensation? (Local Interconnection, Attachment 3, Section 6.1.2)	Attachment 3, Section 6.1.2, which is the language currently in place, sufficiently and adequately defines interconnection; thereby, prohibiting the fraudulent billing for reciprocal compensation. In the event that a contract term is breached, the proper recourse is Dispute Resolution.	The current Agreement does not adequately address the issues brought to light by the conduct of some new entrants in the marketplace and because of 47 USC §252(i), BellSouth must protect itself from such conduct and the language proposed by BellSouth is reasonable.
30.	Should the Change Control Process be sufficiently comprehensive to ensure that there are processes to handle, at a minimum the following situations: (OSS, Attachment 7, Exhibit A)	Yes. Change Control should apply to the entire range of transactions required between AT&T and BellSouth in order for AT&T to utilize Services and Elements. Both electronic and manual interfaces and processes are required to establish and maintain a business relationship with BellSouth and conduct day-to-day business transactions. A comprehensive Change Control Process should provide "cradle to grave" coverage of the life cycle of an interface or process, and its supporting documentation (such as specifications, business rules, methods, and procedures). Thus, implementation of new interfaces, management of interfaces in production (including defect correction), and the retirement of interfaces should be addressed. Change Control should provide a normal process, an exception process, an escalation process, and a dispute resolution process with ultimate recourse to the Commission, mediation, or court adjudication. Additionally, a process by which the Change Control Process can be changed should be specified. The existing Electronic Interface Change	The terms and conditions of the CCP, as well as the subjects to which it should apply, should be negotiated between the CCP committee members and cannot be properly arbitrated in a proceeding that involves only BellSouth and AT&T. Subject to this, BellSouth will respond to the individual items AT&T has identified through separate responses given below. To the extent such issues are arbitrated, the current CCP is more than adequate to serve the needs of the ALEC community and address AT&T's concerns.

		Control Process (EICCP) and the Interim Change Control Process (I-CCP) has proposed are not comprehensive. AT&T's proposal and the existing EICCP/I-CCP. EICCP's coverage are compared below.	

		Situation	AT&T Proposal	EICCP/I-CCP	EICCP
		a) introduction of new electronic interfaces?	Yes.	No.	This subpart is addressed in the EICCP today.
		b) retirement of existing interfaces?	Yes.	No.	This subpart is addressed in the EICCP today.
		c) exceptions to the process?	Yes.	No.	This subpart is addressed in the EICCP today.
		d) documentation, including training?	Yes.	BellSouth may agree in theory, but has implemented all documentation changes unilaterally and outside the I-CCP.	Documentation is addressed in the CCP today; training is not an appropriate issue for the CCP and is handled in other forums.
		e) defect correction?	Yes.	Treatment of defects is being implemented into the I-CCP currently.	Treatment of defects are being implemented into the CCP currently.
		f) emergency changes (defect correction)?	Yes.	BellSouth may agree in theory, but defects have been excluded from I-CCP.	The Type I system outages are defined in the interim change control process, but are handled through the EC Support Help Desk.
		g) an eight step cycle, repeated monthly?	Yes.	No, an 11-step process executed three times a year is sufficient.	For non-Type I issues, BellSouth has an 11-step process in CCP today with variable inputs and outputs for each step.
		h) a firm schedule for notifications associated with changes initiated by BellSouth?	Yes	No.	BellSouth will provide 30-day notification for ALEC-impacting changes.
		i) a process for dispute resolution, including referral to state utility commissions or courts?	Yes.	No. BellSouth holds default power to implement or not implement any change, at its option.	The CCP contains a dispute resolution process. In the event that an issue is not resolved through the CCP's escalation process, BellSouth and the affected ALECs will form a Joint Investigative Team of Subject Matter Experts. If the dispute cannot be

					resolved after this step, then either party may file an appropriate request for resolution of the dispute with the appropriate state commission.
		j) a process for the escalation of changes in process	Yes.	No.	BellSouth is implementing escalation procedures for the CCP.

31.	What should be the resolution of the following OSS issues currently pending in the change control process but not yet provided? (OSS, Attachment 7, Exhibit A)	The issues AT&T is bringing forward for arbitration have been at issue between the parties for various periods of time. The current EICCP process is hostage to BellSouth's default power to implement or not implement any change at its option. This default power exists because the EICCP process is not subject to regulatory oversight. Only arbitration provides AT&T with a means by which it can obtain the requested capabilities from BellSouth in an assured and timely manner. Further, in the absence of a binding methodology by which the industry can effect change, change can only be initiated by the actions of two parties which can then be expanded to incorporate others.	Issues such as those delineated in this issue should be resolved in the CCP. These are industry issues more properly resolved in another forum and not in this two-party arbitration.
	a) parsed customer service records for pre-ordering?	BellSouth should provide parsed customer service records for preordering pursuant to industry standards. AT&T needs this in order to fully integrate its ordering systems with BellSouth's and obtain the functionality now available to BellSouth. BellSouth's internal systems parse the sections and fields of the CSR as needed to meet software program requirements precluding the need for service representatives to re-enter CSR information when processing orders. This item has been an industry standard since the publication of the LSOG3 guidelines.	This subpart is before the CCP. A CCP Change Request was submitted by AT&T requesting a parsed customer service record via TAG. Planning and analysis on this issue will begin mid-2000 on the parsing of the CSR. BellSouth currently provides the ALECs a stream of data via TAG. The stream of data is identified by section with each line uniquely identified and delimited. This is consistent with the data provided to BellSouth's retail units. .
	b) ability to submit orders electronically for all services and	BellSouth should provide the ability to submit orders electronically for all services and	Requests for changes or revisions to BellSouth's electronic interfaces to its OSS

	elements?	elements. Lack of electronic ordering increases the possibility of errors and increases costs. BellSouth reported order flow-through for business services for two years before taking the position that these requests do not flow through. BellSouth formerly claimed only that complex business requests did not flow through, but even then, BellSouth admits that its service representatives type their requests into a front end system (DOE or SONGS), which sends the request to SOCS, which then accepts valid requests and issues the required service orders. Examples of instances in which AT&T requires electronic ordering capability are the UNE Platform, handling of remaining service on partial migrations, use of LSR fields to establish proper billing accounts, ability to order xDSL loops, ability to order digital loops, ability to order complex directory listings, ability to order loops and LNP on a single order, and ability to change main account number on a single order.	should be submitted through the CCP. This process allows BellSouth and the ALEC community to review, prioritize and manage changes and revisions to the electronic interfaces based on the needs of the ALEC participants. The ALEC participants control this process and the associated timelines. Although to BellSouth's knowledge no ALEC has submitted this request to the CCP, the CCP would be the appropriate forum to handle such a request. Non-discriminatory access to BellSouth's OSS does not mean that all services and elements must be ordered electronically with no manual handling. Some services, such as complex services, require manual handling by BellSouth's account teams for BellSouth retail customers. Processing of requests for ALECs may also require some manual processing for these same functions.
	c) electronic processing after electronic ordering, without subsequent manual processing by BellSouth personnel?	BellSouth should provide electronic processing after electronic ordering. See (b), above. Examples of instances in which AT&T submits electronic orders that are subsequently processed manually include LNP, UNE-P with LCC, migrations merging existing accounts, related orders. AT&T has submitted change control requests and participated in other discussions aimed at improving the subsequent manual process pending full automation. Examples include worklist mechanization and a Flow-through Mechanization Project.	Requests for changes or revisions to BellSouth's electronic interfaces to its OSS should be submitted through the CCP. This process allows BellSouth and the ALEC community to review, prioritize and manage changes and revisions to the electronic interfaces based on the needs of the ALEC participants. The ALEC participants control this process and the associated timelines. Although to BellSouth's knowledge no ALEC has submitted this request to the CCP, the CCP would be the appropriate forum to handle such a request. Non-discriminatory access to BellSouth's OSS does not mean that all services and elements must be ordered electronically with no manual handling. Some services, such as complex services, require manual handling by BellSouth's account

			teams for BellSouth retail customers. Processing of requests for ALECs may also require some manual processing for these same functions. Local service requests for some types of services are submitted electronically but "fall out" by design for processing. Even though the requests by design "fall out" for processing, electronic submission of the request improves the overall efficiency and effectiveness of order processing.
32.	Should BellSouth provide AT&T with the ability to access, via EBI/ECTA, the full functionality available to BellSouth from TAFI and WFA? (OSS, Attachment 7)	Yes. TAFI is a non-integrateable interface so AT&T must make additional entries into its own maintenance and repair systems, while BellSouth need only make this entry once. EBI/ECTA is a machine-to- machine interface capable of integration but with limited functional capabilities. It is technically feasible to provide the full suite of TAFI functions via EBI/ECTA.	BellSouth has provided AT&T with complete access to TAFI and has complied with the current standards for ECTA. Future enhancements to ECTA shall be through the CCP.
33.	Should AT&T be allowed to share the spectrum on a local loop for voice and data when AT&T purchases a loop/port combination and if so, under what rates, terms and conditions? (UNEs, Attachment 2, Section 3.10)	Yes. BellSouth's position that sharing of the spectrum on local loop/port combination is only permitted when BellSouth utilizes the portion of the spectrum to provide voice is discriminatory and anti-competitive. Any purchaser of local loops from BellSouth should be allowed to use the loop in providing both voice and data at the same time. There are no technical constraints to this arrangement. The Commission's ordering of such arrangements will further the deployment of advanced data services to all portions of the state, and will not be dependent on the deployment schedule of BellSouth alone.	No. BellSouth is only obligated to permit AT&T to share the spectrum on a local loop/port combination when BellSouth provides voice service over the facilities.
34.	What are the appropriate rates and charges for unbundled network elements and combinations of network elements?	Issues related to rates and charges will be taken up in Docket No. 990649-TP, as discussed in Commission's orders.	Issues related to rates and charges will be taken up in Docket No. 990649-TP, as discussed in the Commission's orders.

217912

CERTIFICATE OF SERVICE
Docket No. 000731-TP

I HEREBY CERTIFY that a true and correct copy of the foregoing was served as follows this 11th day of July, 2000 to the following:

VIA HAND DELIVERY
Staff Counsel
Division of Legal Services
Florida Public Service Commission
2540 Shumard Oak Boulevard
Tallahassee, FL 32399-0850

VIA FEDERAL EXPRESS
Marsha Rule
AT&T Communications of the Southern
States, Inc.
101 North Monroe Street
Suite 700
Tallahassee, FL 32301

VIA HAND DELIVERY
Virginia Tate
AT&T Communications of the Southern
States, Inc.
1200 Peachtree Street, N.W.
Suite 8100
Atlanta, GA 30309

Lisa S. Foshee /lgh
Lisa S. Foshee

ATTACHMENT 3

LOCAL INTERCONNECTION

DISAGREE:

5.3.1.1
5.3.1.7

OPEN-AT&T

1.2
1.5
1.7
1.8
1.9 – 1.11
2.2.2
2.7
3.2 – 3.5
3.6.7
3.18.1.1
4.13.5.3
5.2
5.3.1.1
5.3.3
5.3.3.1
6
Exhibit B

OPEN-BST

1.2
1.4.3
1.4.4
1.5
1.7
1.8
1.9 – 1.11
2.2.2
3.2 – 3.5
3.6.6
3.6.7
3.7
3.8
3.9
4.14.1
5.3.2
Exhibit B

TABLE OF CONTENTS

1. NETWORK INTERCONNECTION 3

2. METHODS OF INTERCONNECTION 5

3. INTERCONNECTION TRUNKING AND ROUTING 8

4. NETWORK DESIGN AND MANAGEMENT FOR INTERCONNECTION 12

5. NETWORK MAINTENANCE 19

EXHIBIT A

EXHIBIT B

EXHIBIT C

EXHIBIT D

EXHIBIT E

EXHIBIT F

LOCAL INTERCONNECTION

1. NETWORK INTERCONNECTION

1.1 The Parties shall provide interconnection with each other's network for the transmission and routing of telephone exchange service (local) and exchange access (intraLATA toll and switched access).

1.1.1 BellSouth shall provide interconnection with BellSouth's network at any technically feasible point within BellSouth's network.

1.1.2 AT&T shall provide interconnection to BellSouth at any mutually agreed upon point.

1.2 **[AT&T must establish, at a minimum, a single Point of Presence, Point of Interface, and Point of Interconnection with BellSouth within the LATA for the delivery of AT&T's originated local, intraLATA toll terminated to BellSouth and transit traffic terminated to other than BellSouth.][OPEN-BST/AT&T]** If AT&T chooses to interconnect at a single Point of Interconnection within a LATA, the interconnection must be at a BellSouth access or local tandem. Furthermore, AT&T must establish Points of Interconnection at all BellSouth access and local tandems where AT&T NXXs are "homed." A "Homing" arrangement is defined by a "Final" Trunk Group between the BellSouth access or local tandem and AT&T End Office switch. A "Final" Trunk Group is the last choice telecommunications path between the access or local tandem and End Office switch. It is AT&T's responsibility to enter its own NPA/NXX access and/or local tandem "homing" arrangements into the national Local Exchange Routing Guide ("LERG"). In order for AT&T to home its NPA/NXX(s) on a BellSouth access or local tandem, AT&T's NPA/NXX(s) must be assigned to an exchange rate center area served by that BellSouth access or local tandem and as specified by BellSouth.

1.3 A Point of Presence is the physical location (a structure where the environmental, power, air conditioning, etc. specifications for a Party's terminating equipment can be met) at which a Party establishes itself for obtaining access to the other Party's network. The Point of Presence is the physical location within which the Point(s) of Interface occur.

1.4 A Point of Interface is the physical telecommunications interface between BellSouth and AT&T's interconnection facilities. It establishes the technical interface and point of operational responsibility. The primary purpose of the Point of Interface is to serve

as the terminus for each Party's interconnection facilities. The Point of Interface has the following main characteristics:

1.4.1 It is a cross-connect point to allow connection, disconnection, transfer or restoration of service.

1.4.2 It is a point where BellSouth and AT&T can verify and maintain specific performance objectives.

1.4.3 **[It is specified according to the interface offered in this Attachment 3.] [OPEN-BST]**

1.4.4 [The Parties provide their own equipment to interface with the equipment on the customer premises.] [OPEN-BST]

1.5 **[The Point of Interconnection is the point at which the originating Party delivers its originated traffic to the terminating Party's first point of switching on the terminating Party's common (shared) network for call transport and termination. Points of Interconnection are available at either access tandems, local tandems, End Offices, or any other technically feasible point, as described in this Agreement. AT&T's requested Point of Interconnection will also be used for the receipt and delivery of transit traffic at BellSouth access and local tandems. Points of Interconnection established at the BellSouth local tandem apply only to AT&T-originated local and local originating and terminating transit traffic.] [OPEN-BST/AT&T]**

1.6 The Parties will work cooperatively to establish the most efficient trunking network in accordance with the provisions set forth in this Attachment 3 and accepted industry practices.

1.7 **[Each party will be responsible for engineering its network (i.e., the underlying facilities on which trunks are provisioned) on its side of the Point of Interface.] AT&T, at its option, shall establish Points of Presence and Points of Interface for the delivery of its originated local and intraLATA toll traffic to BellSouth. The Point of Interface may not necessarily be established at the Point of Interconnection.] [OPEN-BST/AT&T]**

1.8 **[BellSouth shall designate the Points of Presence and Points of Interface for the delivery of its originated local and intraLATA toll traffic to AT&T for call transport and termination by AT&T.] [OPEN-BST/AT&T]**

1.9 **[For the purposes of this Attachment 3, Local Channel is defined as a switch transport facility between a Party's Point of Presence and its designated serving wire center.**

1.10 **For the purposes of this Attachment 3, Serving Wire Center is defined as the wire center owned by one Party from which the other Party would normally obtain dial tone for its Point of Presence.**

1.11 **For the purposes of this Attachment 3, Dedicated Transport is defined as a switch transport facility between a Party's designated serving wire center and the first point of switching on the other Party's common (shared) network.] [OPEN-BST/AT&T]**

2. METHODS OF INTERCONNECTION

2.1 The Parties shall interconnect their networks utilizing one of the following methods in accordance with the provisions set forth in this Attachment 3.

2.2 Interconnection by one Party at the premises of the other Party.

2.2.1 BellSouth shall provide collocation to AT&T pursuant to the terms set forth in Attachment 4 of this Agreement, incorporated herein by this reference. AT&T may, at its option, purchase such collocation at the rates, terms, and conditions set forth in Attachment 4 of this Agreement, incorporated herein by this reference.

2.2.2 **[AT&T, at its sole discretion, may permit BellSouth to utilize space and power in AT&T facilities specified by AT&T solely for the purpose of terminating BellSouth's local traffic. BellSouth may request installation of both cable and equipment, or cable only. The pricing, terms and conditions of such arrangement shall be pursuant to Exhibit _ of this Attachment 3, incorporated herein by this reference.] [OPEN-BST/AT&T]**

2.3 Leased Facilities – where the Party requesting interconnection utilizes the facilities offered by the other Party. Such leased facilities shall be provided at the rates, terms, and conditions set forth in this Attachment 3. At AT&T's request, it may lease separate facilities for the sole purpose of delivering undipped 8YY traffic from AT&T's end users to BellSouth's Switching Services Port ("SSP") for dipping into BellSouth's toll free database.

2.4 Third Party Facilities – where the Party requesting interconnection utilizes the facilities provided by a source other than the Parties to this Agreement. The Party utilizing this option shall comply with industry

standards to maintain network integrity and will be solely responsible for any charges or fees assessed by the third party for use of its facilities.

2.5 Commercial Intra-building Interconnection – where both Parties have constructed broadband facilities into a commercial building (i.e., a building that is not a telephone central office) and agree to establish a Point of Interface at such location utilizing intra-building cable.

2.6 "Fiber Meet" is an interconnection arrangement whereby the Parties physically interconnect their networks via an optical fiber interface (as opposed to an electrical interface), at which one Party's facilities, provisioning, and maintenance responsibility begins and the other Party's responsibility ends (i.e., Point of Interface). A Fiber Meet shall be an arrangement as set forth in Section 2.9 of this Attachment 3.

2.7 Any other method determined to be technically feasible and requested by AT&T shall be done pursuant to the process defined in Attachment 10 of this Agreement, incorporated herein by this reference. Any other method determined to be technically feasible and requested by BellSouth and agreed to by AT&T shall be done pursuant to **[_____.] [OPEN-AT&T]**

2.8 Local Tandem Interconnection. This interconnection arrangement allows AT&T to establish a Point of Interconnection at BellSouth local tandems for: (1) the delivery of AT&T-originated local traffic transported and terminated by BellSouth to BellSouth end offices within the local calling area as defined in BellSouth's General Subscriber Services Tariff, Section A3 served by those BellSouth local tandems; and (2) for local transit traffic transported by BellSouth for third party network providers who have also established Points of Interconnection at those BellSouth local tandems.

2.8.1 When a specified local calling area is served by more than one BellSouth local tandem, AT&T must designate a "home" local tandem for each of its assigned NPA/NXXs and establish trunk connections to such local tandems. Additionally, AT&T may choose to establish a Point of Interconnection at the BellSouth local tandems where it has no codes homing but is not required to do so. AT&T may deliver local traffic to a "home" BellSouth local tandem that is destined for other BellSouth or third party network provider end offices subtending other BellSouth local tandems in the same local calling area where AT&T does not choose to establish a Point of Interconnection. It is AT&T's responsibility to enter its own NPA/NXX local tandem homing arrangements into the LERG either directly or via a vendor in order for other third party network providers to determine appropriate traffic routing to AT&T's codes. Likewise, AT&T shall obtain its routing information from the LERG.

2.8.2 Notwithstanding establishing Points of Interconnection to BellSouth's local tandems, AT&T must also establish Points of Interconnection to BellSouth access tandems within the LATA on which AT&T has NPA/NXX's homed for the delivery of Interexchange Carrier Switched Access ("SWA") and toll traffic, and traffic to Type 2A CMRS connections located at the access tandems. BellSouth cannot switch SWA traffic through more than one BellSouth access tandem. SWA, Type 2A CMRS or toll traffic routed to the local tandem in error will not be backhauled to the BellSouth access tandem for completion. (Type 2A CMRS interconnection is defined in BellSouth's General Subscriber Services Tariff, Section A35.)

2.8.3 Bell South's provisioning of local tandem interconnection assumes that AT&T has the necessary local interconnection arrangement with the other third party network providers subtending those local tandems as required by the Act.

2.9 Fiber Meet

2.9.1 If AT&T elects to establish a Point of Interconnection with BellSouth pursuant to a Fiber Meet, AT&T and BellSouth shall jointly engineer and operate a Synchronous Optical Network ("SONET") transmission system by which they shall interconnect their transmission and routing of local traffic via a Local Channel facility at either the DS0, DS1, or DS3 level and shall be ordered via an Access Services Request ("ASR") in the initial phase of this offering. The Parties shall work jointly to determine the specific transmission system. The parties will work cooperatively to establish joint access to transmission overhead signals and commands for such facilities and software. However, AT&T's SONET transmission must be compatible with BellSouth's equipment in the serving wire center. The Parties will work cooperatively in the selection of compatible transmission equipment and software. Fiber Meet will be used for the provision of two-way trunking unless otherwise agreed to by the Parties.

2.9.2 BellSouth shall, wholly at its own expense, procure, install and maintain the agreed upon SONET equipment in the BellSouth Serving Wire Center ("BSWC").

2.9.3 AT&T shall, wholly at its own expense, procure, install and maintain the agreed upon SONET equipment in the AT&T Serving Wire Center ("ASWC").

2.9.4 The parties shall mutually agree upon a Point of Interface outside of the BSWC as a Fiber Meet point and shall make all necessary preparations to receive and to allow and enable delivery of fiber optic facilities into the Point of Interface with sufficient spare length to reach the Point of Interface. A Common Language Location Identification

("CLLI") code will be established for each Point of Interface. The code established must be a building type code. All orders shall originate from the Point of Interface (i.e., Point of Interface to AT&T, Point of Interface to BellSouth).

2.9.5 The Parties shall deliver and maintain their own strands wholly at their own expense. Upon verbal request by either Party, the other Party shall allow access to the Fiber Meet entry point for maintenance purposes as promptly as possible.

2.9.6 The Parties shall jointly coordinate and undertake maintenance of the SONET transmission system. Each Party shall be responsible for maintaining the components of their own SONET transmission system.

2.9.7 Each Party will be responsible for (i) providing its own transport facilities to the Fiber Meet, and (ii) the cost to build-out its facilities to such Fiber Meet.

2.9.8 Neither Party shall charge the other for its portion of the Fiber Meet facility between the ASWC and the BSWC used exclusively for the other Party's local traffic (i.e., the Local Channel). The Parties do not intend to utilize this arrangement for transit traffic.

3. INTERCONNECTION TRUNKING AND ROUTING

3.1 The Parties will convert all existing interconnection arrangements and trunks to the interconnection arrangements described in this Attachment in accordance with the following:

3.2 [Within 45 days of the Effective Date, the Parties will mutually develop an operations plan based on sound engineering and operations principles, which will specify the guidelines to convert from the existing interconnection arrangements to the interconnection arrangements described in this Attachment 3. Such guidelines will conform to standard industry practices adopted by and contained in documents published by Industry Forums, including but not limited to, the Alliance for Telecommunications Industry Solutions ("ATIS") and the Ordering and Billing Forum ("OBF").

3.3 Each Party shall bear its own costs to convert from the existing interconnection arrangements to the interconnection arrangements described in this Attachment.

3.4 Unless otherwise mutually agreed, the Parties will complete the conversion within one [1] year of the Effective Date of the Agreement.

3.5 **If, following one [1] year after the Effective Date of the Agreement, there exists any interconnection trunks which have not been converted to the interconnection arrangements described in this Attachment 3, then either Party may invoke the dispute resolution proceeding, pursuant to Section 16 of the General Terms and Conditions of this Agreement, incorporated herein by this reference. [OPEN-BST/AT&T]**

3.6 The Parties will use the following interconnection standards:

3.6.1 The Parties agree to establish Binary 8 Zero Sum Extended Superframe line protocol, where technically feasible.

3.6.2 In those cases where either Party's equipment will not support 64K Clear Channel Capability ("CCC"), the Parties agree to establish AMI line coding. Any AMI line coding will be Superframe formatted. DS3 facilities will be provisioned with C-bit parity.

3.6.3 Where additional equipment is required, such equipment shall be obtained, engineered, and installed to support 64K CCC trunks.

3.6.4 All interconnection facilities between the Parties will be sized according to mutual forecasts developed per the requirements of Section 4.14 of this Attachment 3 and sound engineering practices.

3.6.5 Interconnection will be provided utilizing either a DS1 or DS3 interface or, with the mutual agreement of the Parties, another technically feasible interface (e.g., STS-1).

3.6.6 BellSouth and AT&T shall establish interconnecting trunk groups and trunking configurations between networks including the establishment of one-way or two-way trunks in accordance with **[Exhibit ___ of this Attachment 3, attached hereto and incorporated herein by this reference.] [OPEN-BST to provide list]**

3.6.7 **[All terms and conditions, as well as charges, both non-recurring and recurring, associated with interconnecting trunk groups between BellSouth and AT&T not addressed in Exhibit A shall be as set forth in the appropriate Party's intrastate or interstate tariff for switched access services. For two-way trunking that carries the Parties' local and intraLATA toll traffic, excluding transit traffic, the Parties shall be compensated for the nonrecurring and recurring charges for trunks and DS1 facilities at 50% of the applicable contractual or tariff rates for the services provided by each Party. AT&T shall be responsible for ordering and paying for any two-way trunks carrying transit traffic.] [OPEN-BST/AT&T]**

3.7 **[The Parties will work cooperatively to assure that reasonable diversity is achieved among the trunk groups between each Party's switches within each LATA.] [OPEN-BST]**

3.8 All originating toll free service calls for which the end office Party performs the SSP function, if delivered to the tandem Party, shall be delivered by the end office Party using GR-394 CORE format for IXC bound calls, or using GR-317-CORE format for LEC bound calls. [OPEN-BST]

3.9 **[Originating Feature Group B calls delivered to either Party's tandem shall use GR-317-CORE signaling format unless the associated FGB carrier employs GR-394-CORE signaling for its FGB traffic at the serving access tandem.] [OPEN-BST]**

3.10 The Parties shall deliver over any trunk groups groomed for a specific access tandem only traffic destined for those publicly-dialable NPA NXX codes served by: (1) end offices that directly subtend the access tandem; and (2) those providers (including, but not limited to CMRS providers, other independent LECs, and CLECs) that directly connect to the access tandem.

3.11 For BellSouth end offices that do not normally subtend tandem for which calls are routed to that end office on an alternate routing basis, BellSouth will provide AT&T its alternative routing (scheme) arrangements. Where BellSouth utilizes alternative arrangements, it shall deliver any traffic through that alternative routing.

3.12 The Parties shall deliver over any trunk groups groomed for a specific end office only traffic destined for those publicly-dialable NPA NXX codes served by that end office, unless otherwise agreed to by the Parties.

3.13 The source for the routing information for all traffic shall be the LERG, unless otherwise agreed to between the Parties.

3.14 Where either Party delivers over the local traffic trunk groups miscellaneous calls (e.g., time, weather, 976) destined for the other Party, it shall deliver such traffic in accordance with the serving arrangements defined in the LERG.

3.15 The Parties will cooperate to establish separate, choke trunk groups for the completion of calls to customers such as radio contest lines. Notwithstanding the foregoing, the Parties agree that where the Parties' switch has the capability to perform call gapping and other protective network traffic management controls, separate trunk groups shall not be required to carry such traffic.

3.16 N11 code traffic shall be routed between the Parties' networks pursuant to accepted industry practice (e.g., over local traffic trunks or over separate trunk groups).

3.17 Each Party shall establish procedures whereby its operator bureau will coordinate with the operator bureau of the other Party in order to provide Busy Line Verification/Busy Line Verification Interrupt ("BLV/BLVI") services on calls between their respective line side end users for numbers that are not ported.

3.18 A blocking standard of one-half of one percent (.005) shall be maintained during the average busy hour for final trunk groups carrying jointly provided exchange access traffic between an end office and an access tandem. All other final trunk groups are to be engineered with a blocking standard of one percent (.01). High usage trunk groups shall be sized to an economic CCS parameter mutually agreed to by both Parties.

3.18.1.1 BellSouth agrees to provide upon request of AT&T, pursuant to Section __ of the General Terms and Conditions of this Agreement, traffic usage data (including, but not limited to, usage, peg and overflow counts) for each AT&T NXX subtending the BellSouth tandem to determine which AT&T traffic by NXX is being blocked. [OPEN-AT&T]

3.18.1.2 Pursuant to Attachment 9, incorporated herein by this reference, BellSouth shall report to AT&T information regarding blocking of interconnection traffic.

3.19 The Parties agree to jointly manage the capacity of interconnection trunk groups to encourage the economic deployment of increasingly robust and diverse interconnection between their networks.

4. NETWORK DESIGN AND MANAGEMENT FOR INTERCONNECTION

4.1 Network Management and Changes. Both Parties will work cooperatively with each other to install and maintain the most effective and reliable interconnected telecommunications networks, including but not limited to, the exchange of toll-free maintenance contact numbers and escalation procedures. Both Parties agree to provide public notice of changes in the information necessary for the transmission and routing of services using its local exchange facilities or networks, as well as of any other changes that would affect the interoperability of those facilities and networks.

4.2 Interconnection Technical Standards. The interconnection of all networks will be based upon accepted industry/national guidelines for transmission standards and traffic blocking criteria. Interconnecting facilities shall conform, at a minimum, to the technical specifications set forth in the applicable industry standard technical references. Signal transfer point, Signaling System 7 ("SS7") connectivity is required at each interconnection point. BellSouth will provide out-of-band signaling using Common Channel Signaling Access Capability where technically and economically feasible, in accordance with the technical specifications set forth in the applicable industry standard technical references. Facilities of each Party shall provide the necessary on-hook, off-hook answer and disconnect supervision and shall hand off calling number ID (Calling Party Number) when technically feasible.

4.3 Quality of Interconnection. The local interconnection for the transmission and routing of telephone exchange service and exchange access that each Party provides to each other will be at least equal in quality to what it provides to itself and any subsidiary or affiliate, where technically feasible, or to any other Party to which each Party provides local interconnection.

4.4 Common Channel Signaling. Both Parties will provide LEC-to-LEC Common Channel Signaling ("CCS") to each other, where available, in conjunction with all traffic in order to enable full interoperability of CLASS features and functions except for call return. All CCS signaling

parameters will be provided, including automatic number identification ("ANI"), originating line information ("OLI") calling company category, charge number, etc. All privacy indicators will be honored, and each Party will cooperate with each other on the exchange of Transactional Capabilities Application Part ("TCAP") messages to facilitate full interoperability of CCS-based features between the respective networks. The Parties will provide all line information signaling parameters including, but not limited to, Calling Party Number, Charge Number (if it is different from calling party number), and originating line information ("OLI"). For terminating FGD, either Party will pass any CPN it receives from other carriers. All privacy indicators will be honored. Where available, network signaling information such as Transit Network Selection ("TNS") parameter (SS7 environment) will be provided by the end office Party wherever such information is needed for call routing or billing. Where TNS information has not been provided by the end office Party, the tandem Party will route originating exchange access traffic to the IXC using available translations. The Parties will follow all industry Ordering and Billing Forum ("OBF") adopted guidelines pertaining to TNS codes.

4.4.1 BellSouth's Common Channel Signaling Access Service ("CCSAS") allows interconnected carriers to exchange signaling information over a communications path that is separate from the message path.

4.4.2 The transport portion of CCSAS, commonly referred to as a signaling link, is provided via dedicated 56 kbps out of band signaling connections between the AT&T signaling point of interconnection and BellSouth's signaling point of interconnection ("SPOI").

4.4.3 The network termination point where this interconnection takes place is called the Signaling Transfer Point ("STP") port termination.

4.4.4 Charges for signaling links and the STP port termination can be found in Attachment 2 of this Agreement, incorporated herein by this reference.

4.4.5 Each CCSAS signaling connection provides for two-way digital transmission at speeds in multiples of 56 kbps. The connection to BellSouth's STP pair can be made from either AT&T's signaling point ("SP"), which requires a minimum of two links, or from AT&T's STP pair, which requires a minimum of four links.

4.5 SS7 Interconnection will take place at STP locations that are mutually agreed to by the Parties.

4.6 Where CCS is not available, in-band multi-frequency signaling will be provided. In such an arrangement, each Party will outpulse the full ten-

digit telephone number of the called party to the other Party with appropriate call set-up and Automatic Number Identification ("ANI") where available, at parity.

4.7 The Parties will provide CCS to one another, where and as available, in conjunction with access to call related databases and Service Control Points ("SCP"), including toll free databases, Line Information Database ("LIDB"), Calling Name ("CNAM"), and any other necessary databases.

4.8 When the Parties establish new links , each Party shall provide its own STP port termination(s) and charge the other Party for the signaling links as follows

4.8.1 Where the SPOI for the signaling link is at a Fiber Meet, there shall be no compensation between the Parties for the signaling link facilities used.

4.8.2 Where the SPOI for the signaling link facilities is located at the BellSouth Serving Wire Center where the signaling link facilities terminates and AT&T has furnished the interconnection facility, BellSouth will pay a monthly charge equal to one half of the AT&T-provided facility charge according to BellSouth's unbundled rate element for the facility used. Rates for said interconnection facilities shall be as set forth in Exhibit __ in Attachment 2, incorporated herein by this reference.

4.8.3 Where the SPOI for the signaling link facilities is located at the AT&T Serving Wire Center facility where the signaling link facilities terminate and BellSouth has furnished the interconnection facility, AT&T will pay a monthly charge equal to one half of the BellSouth-provided facility charge according to BellSouth's unbundled rate element for the facility used. Rates for said interconnection facilities shall be as set forth in Exhibit __ in Attachment 2, incorporated herein by this reference.

4.8.4 Each party is responsible for all facility maintenance and provisioning on its side of the SPOI.

4.9 Implementation of new interconnection arrangements (as opposed to augmentation of existing arrangements), including testing of SS7 interconnection, shall be pursuant to the technical specifications set forth in the applicable industry standard technical references. Each Party will be expected to provide sufficient cooperative testing resources to ensure proper provisioning, including the ability to confirm that AT&T LERG-assigned NPA NXX codes have been opened, translated and routed accurately in all appropriate BellSouth switches.

A mutually agreed test calling plan shall be conducted to ensure successful completion of originating and terminating calls.

4.10 Message Screening

4.10.1 BellSouth shall set message screening parameters so as to accept messages from AT&T local or tandem switching systems destined to any signaling point in the BellSouth SS7 network or any network interconnected to the BellSouth SS7 network with which the AT&T switching system has a legitimate signaling relationship.

4.10.2 BellSouth shall set message screening parameters so as to accept messages destined to/from an AT&T local or tandem switching system or to/from an AT&T Service Control Point ("SCP") from any signaling point or network interconnected to the BellSouth SS7 network with which the AT&T switching system has a legitimate signaling relationship.

4.11 STP Requirements

4.11.1 BellSouth shall provide message transfer part and Signaling Connection Control Point ("SCCP") protocol interfaces in accordance with the technical specifications set forth in the applicable industry standard technical references.

4.12 SS7 Network Interconnection

4.12.1 SS7 Network Interconnection is the interconnection of AT&T STPs and AT&T local or tandem switching systems with the BellSouth STPs. This interconnection provides connectivity that enables the exchange of SS7 messages among BellSouth switching systems and databases, AT&T local or tandem switching systems and other third-party switching systems directly connected to the BellSouth SS7 network.

4.12.2 SS7 Network Interconnection shall provide connectivity to all components of the BellSouth SS7 network. These include:

4.12.2.1 BellSouth local or tandem switching systems;

4.12.2.2 BellSouth databases; and

4.12.2.3 Other third-party local or tandem switching systems.

4.12.3 The connectivity provided by SS7 Network Interconnection shall fully support the functions of BellSouth switching systems and databases and AT&T or other third-party switching systems with [note could be A or D/B link] direct access to the BellSouth SS7 network.

4.12.4 SS7 Network Interconnection shall provide transport for certain types of TCAP messages. If traffic is routed based on dialed or translated digits between an AT&T local switching system and a BellSouth or other third-party local switching system, either directly or via a BellSouth tandem switching system, then it is a requirement that the BellSouth SS7 network convey via SS7 Network Interconnection the TCAP messages that are necessary to provide Call Management services (Automatic Callback, Automatic Recall, and Screening List Editing) between the AT&T local STPs and the BellSouth or other third-party local switch.

4.12.5 When the capability to route messages based on Intermediate Signaling Network Identifier ("ISNI") is generally available on BellSouth STPs, the BellSouth SS7 Network shall also convey TCAP messages using SS7 Network Interconnection in similar circumstances where the BellSouth switch routes traffic based on a Carrier Identification Code ("CIC").

4.12.6 BellSouth shall offer the following SS7 Network Interconnection options to connect AT&T or AT&T-designated local or tandem switching systems or STPs to the BellSouth SS7 network:

4.12.6.1 A-link interface from AT&T local or tandem switching systems; and

4.12.6.2 D/B-link interface from AT&T STPs.

4.12.7 Each interface shall be provided by one or more sets (layers) of signaling links, as follows:

4.12.7.1 An A-link layer shall consist of two links.

4.12.7.2 A D/B-link layer shall consist of four links.

4.12.8 The Parties agree to implement intraoffice diversity for the signaling links so that no single failure of intraoffice facilities or equipment shall cause the failure of any two links in a layer connecting to a BellSouth STP.

4.13 <u>Trunk Forecasting and Servicing Requirements</u>.

4.12.1 The Parties shall exchange technical descriptions and forecasts of their interconnection and traffic requirements in sufficient detail necessary to establish the interconnections required to assure traffic completion to and from all customers in their respective designated service areas. In order for BellSouth to provide as accurate reciprocal trunking forecasts as possible to AT&T, AT&T must timely inform BellSouth of any known or anticipated events that may affect BellSouth reciprocal trunking requirements. If AT&T refuses to provide such

information, BellSouth shall provide reciprocal trunking forecasts based only on existing trunk group growth and BellSouth's annual estimated percentage of BellSouth subscriber line growth.

4.13.1 Both Parties shall meet every six months or at otherwise mutually agreeable intervals for the purpose of exchanging non-binding forecast of its traffic and volume requirements for the interconnection and network elements provided under this Agreement, in the form and in such detail as agreed by the Parties. The Parties agree that each forecast provided under this section shall be deemed "Confidential Information" as set forth in Section 18 of the General Terms and Conditions of this Agreement, incorporated herein by this reference.

4.13.2 The trunk forecast should include trunk requirements for all of the interconnecting trunk groups for the current year plus the next two future years. The forecast meeting between the two companies may be a face-to-face meeting, video conference or audio conference. It may be held regionally or geographically. Ideally, these forecast meetings should be held at least semi-annually, or more often if the forecast is no longer usable. Updates to a forecast or portions thereof should be made whenever the Party providing the forecast deems that the latest trunk requirements exceed the original quantities by 48 trunks or 10%, whichever is greater. Either Party should notify the other Party if they have measurements indicating that a trunk group is exceeding its designed call carrying capacity and is impacting other trunk groups in the network. Also, either Party should notify the other Party if they know of situations in which the traffic load is expected to increase significantly and thus affect the interconnecting trunk requirements as well as the trunk requirements within the other Party's network. The Parties agree that the forecast information provided under this section shall be deemed "Confidential Information" as set forth in Section 18 of the General Terms and Conditions of this Agreement, incorporated herein by this reference. Each Party shall provide a specified point of contact for planning, forecasting and trunk servicing purposes.

4.13.3 For a non-binding trunk forecast, agreement between the two Parties on the trunk quantities and the timeframe of those trunks does not imply any liability for failure to perform if the trunks are not available for use at the required time.

4.13.4 <u>Signaling Call Information</u>. BellSouth and AT&T will send and receive 10 digits for local traffic. Additionally, BellSouth and AT&T will exchange the proper call information, i.e., originated call company number and destination call company number, CIC, and OZZ, including all proper translations for routing between networks and any information necessary for billing.

4.13.5 Both Parties will manage the capacity of their interconnection trunk groups. BellSouth will issue an ASR to AT&T to order changes BellSouth desires to the BellSouth interconnection trunk groups based on BellSouth's capacity assessment. AT&T will issue an ASR to BellSouthBellSouth to order changes AT&T desires to the AT&T interconnection trunk groups based on AT&T's capacity assessment.

4.13.5.1 Either Party may issue a Trunk Group Service Request ("TGSR") to the other Party to order changes it desires to the interconnection trunk groups based on its capacity assessment. The Party receiving the TGSR will, within ten (10) business days, respond with an ASR or an explanation of why it believes an ASR is inappropriate.

4.13.5.2 The Party submitting an ASR will provide complete and accurate tie down inventory assignments in typical industry bay, panel and jack format, or in such other format as the Parties agree, on each order by use of a Design Layout Record. Additional tie down information, such as span information, may be required when applicable.

4.13.5.3 The Parties will prepare ASRs pursuant to the industry standard guidelines of the OBF. **[When submitting an ASR, BellSouth will identify AT&T's end office in the SEC LOC field of the ASR form.] [OPEN-AT&T]**

4.13.5.4 The Party provisioning the ASR will assign to the requesting Party a location code expressed in CLLI code format that will appear in the Access Customer Terminal Location Field of the ASR.

4.13.6 The standard interval used for the provisioning of additions to local interconnection trunk groups shall be no greater than ten (10) business days, for orders of fewer than ninety-six (96) DS-0 trunks. Other orders shall be determined on an individual case basis. Where feasible, either Party will expedite installation, upon the other Party's request.

4.13.7 Major projects shall be limited to those projects that require the coordination and execution of multiple orders or related activities between and among BellSouth and AT&T work groups specifically relating to: (i) the initial establishment of local interconnection trunk groups; (ii) extending service into a new area; (iii) NXX code moves; (iv) facility grooming; or (v) network rearrangements. If orders that are component pieces of a major project are submitted after project implementation has been jointly planned and coordinated, they shall be submitted with a major project reference. Several orders submitted at one time may not be classified as a major project without the consent of the submitting Party. Each Party will identify a single point

of contact that will be responsible for overall coordination and management of a major project through an agreed completion point.

4.13.8 As provided herein, AT&T and BellSouth agree to exchange escalation lists which reflect contact personnel including vice president level officers. These lists shall include name, department, title, phone number, and fax number for each person. AT&T and BellSouth agree to exchange an up-to-date list promptly following changes in personnel or information.

4.14 Interference or Impairment

4.14.1 [Within three (3) business days of receipt of notification of blocking of traffic originated within the other Party's network, the Parties shall determine and begin work to implement reasonable corrective measures in a manner consistent with industry practices.] [OPEN-BST]

4.15 Local Dialing Parity

4.15.1 BellSouth and AT&T shall provide local and toll dialing parity to each other with no unreasonable dialing delays. Dialing parity shall be provided for all originating telecommunications services that require dialing to route a call. BellSouth and AT&T shall permit similarly situated telephone exchange service end users to dial the same number of digits to make a local telephone call notwithstanding the identity of the end user's or the called party's telecommunications service provider.

5. NETWORK MAINTENANCE

5.1 Outage Repair Standard

5.1.1 In the event of an outage or trouble in any arrangement, facility, or service being provided by BellSouth hereunder, BellSouth will follow procedures for isolating and clearing the outage or trouble that are no less favorable than those that apply to comparable arrangements, facilities, or services being provided by BellSouth to itself, Affiliate or any other carrier whose network is connected to that of BellSouth.

5.2 [BellSouth shall provide AT&T at least sixty (60) days' advance notice of any scheduled maintenance activity which may impact AT&T's end users. Scheduled maintenance shall include, without limitation, such activities as, switch software retrofits, power tests, major equipment replacements and cable rolls. Plans for scheduled maintenance shall include, at a minimum, the following information: location and type of facilities, specific work to be

performed, date and time work is scheduled to commence, work schedule to be followed, date and time work is scheduled to be completed, estimated number of work-hours for completion.] [OPEN-AT&T]

5.3 Interconnection Compensation

5.3.1 Compensation for Local Traffic

5.3.1.1 Local Traffic means any telephone call that originates and terminates in the same LATA and is billed by the originating Party as a local call **[when the originating Party has its own switch]. [OPEN-AT&T]** Therefore, when an AT&T end user originates traffic and AT&T sends it to BellSouth for termination, AT&T will determine whether the traffic is local or intraLATA toll. When a BellSouth end user originates traffic and BellSouth sends it to AT&T for termination, BellSouth will determine whether the traffic is local or intraLATA toll. Each Party will provide the other with information that will allow it to distinguish local from intraLATA toll traffic. At a minimum, each Party shall utilize NXX's in such a way that the other Party shall be able to distinguish local from intraLATA toll traffic.

DISAGREE

AT&T PROPOSAL: As clarification of this definition and for reciprocal compensation, Local Traffic does include traffic that originates from or terminates to or through an enhanced service provider or information service provider. As further clarification, Local Traffic does not include any minutes of traffic that were generated solely for the purpose of receiving reciprocal compensation and were not related to traffic routinely and ordinarily recognized within the industry to constitute local traffic as a result of a telephone call (i.e., voice or data traffic).

BST PROPOSAL: As clarification of this definition and for reciprocal compensation, Local Traffic does not include traffic that originates from or is directed to or through an enhanced service provider or information service provider. As further clarification, Local Traffic does not include traffic that consists of minutes of use from any end user customer that relies upon a call placed by that end user customer or on the end user customer's behalf to establish or maintain a network connection, if: (a) minutes of use to be billed are primarily associated with traffic of a type not routinely and ordinarily recognized by a reasonable person to constitute traffic as a result of a telephone call (i.e., voice or data traffic); (b) the end user customer does not control

the destination of the call; and (c) the minutes of use do not serve a legitimate purpose that is unrelated to the receipt of reciprocal compensation or any other benefit that may be derived solely from establishing or maintaining the network connection.

5.3.1.2 The Parties shall provide for the mutual and reciprocal recovery of the costs for the network facilities utilized in transporting and terminating local traffic on each other's network. The Parties agree that charges for transport and termination of calls on their respective networks are as set forth in Exhibit A to this Attachment.

5.3.1.3 For the purposes of this Attachment 3, Common (Shared) Transport is defined as the transport of one Party's traffic by the other Party over the other Party's common (shared) facilities between the other Party's tandem switch and end office switch and/or between the other Party's tandem switches.

5.3.1.4 For the purposes of this Attachment 3, Tandem Switching is defined as the function that establishes a communications path between two switching offices through a third switching office (the Tandem switch).

5.3.1.5 For the purposes of this Attachment 3, End Office Switching is defined as the function that establishes a communications path between the trunk side and line side of the End Office switch.

5.3.1.6 If AT&T utilizes a switch outside the LATA and BellSouth chooses to purchase dedicated or common (shared) transport from AT&T for transport and termination of BellSouth originated traffic, BellSouth will pay AT&T no more than the airline miles between the V & H coordinates of the Point of Interface within the LATA where AT&T receives the BellSouth-originated traffic and the V & H coordinates of the BellSouth Exchange Rate Center Area that the AT&T terminating NPA/NXX is associated in the same LATA. For these situations, BellSouth will compensate AT&T at either dedicated or common (shared) transport rates specified in Exhibit A and based upon the network facilities provided by AT&T as defined in this Attachment 3.

5.3.1.7 DISAGREE

AT&T PROPOSAL: ~~**Neither Party shall represent access services traffic (e.g., Internet Protocol Telephony, FGA, FGB, etc.) as Local Traffic for purposes of payment of reciprocal compensation. "Internet Protocol Telephony" is defined as real-time voice conversations over the Internet by converting voices into data which is compressed and split into packets, which are sent over the Internet like any other packets and reassembled as audio output at the receiving end.**~~

BST PROPOSAL: Neither Party shall represent access services traffic (e.g., Internet Protocol Telephony, FGA, FGB, etc.) as Local Traffic for purposes of payment of reciprocal compensation. "Internet Protocol Telephony" is defined as real-time voice conversations over the Internet by converting voices into data which is compressed and split into packets, which are sent over the Internet like any other packets and reassembled as audio output at the receiving end.

5.3.2 **[Unidentifiable traffic. AT&T shall utilize its NPA/NXXs in such a way and will provide the necessary information so that BellSouth shall be able to distinguish local from intraLATA toll traffic for BellSouth originated traffic. AT&T end users assigned NPA/NXX line numbers shall be physically located in the BellSouth rate center with which the NPA/NXX has been associated. Whenever BellSouth delivers traffic to AT&T for termination on the AT&T's network, if BellSouth cannot determine, because of the manner in which AT&T has utilized its NXX codes whether the traffic is local or toll, BellSouth will charge the applicable rates for originating intrastate network access service as reflected in BellSouth's Intrastate Access Services Tariff. BellSouth will make appropriate billing adjustments if AT&T can provide sufficient information for BellSouth to determine whether said traffic is local or toll.] [OPEN-BST]**

5.3.3 **DISAGREE**

BST PROPOSAL

Percent Local Use. Each Party will report to the other a Percentage Local Usage ("PLU"). The application of the PLU will determine the amount of local minutes to be billed to the other Party. For purposes of developing the PLU, each Party shall consider every local call and every long distance call, excluding intermediary traffic. **[By the first of January, April, July and October of each year, BellSouth and AT&T shall provide a positive report updating the PLU. Detailed requirements associated with PLU reporting shall be as set forth in BellSouth's Standard Percent Local Use Reporting Platform for Interconnection Purchasers, as it is amended from time to time during this Agreement.]** Notwithstanding the foregoing, where the terminating company has message recording technology that identifies the traffic terminated, such information, in lieu of the PLU factor, shall at the company's option be utilized to determine the appropriate reciprocal compensation to be paid.

[Notwithstanding the reporting interval set forth in Section 5.3.3, BellSouth will accept and implement a monthly PLU, for a period of twelve (12) months, whenever AT&T gains an end user whose calling pattern and traffic would likely have an impact on the PLU reported by AT&T or whenever AT&T opens a new calling area or begins marketing local services in a new area. After reporting the PLU monthly for a twelve (12) month period, the PLU reporting will revert to quarterly. Unless the monthly reporting demonstrates that the PLU has stabilized, then the reporting party will continue to report a monthly PLU for an additional six (6) month period or until the Parties agree that the PLU has stabilized, whichever occurs first. In all other instances, the PLU reporting shall be quarterly.]

AT&T PROPOSAL

Percent Local Use. Each Party will report to the other a Percentage Local Usage ("PLU"). The application of the PLU will determine the amount of local minutes to be billed to the other Party. For purposes of developing the PLU, each Party shall consider every local call and every long distance call, excluding intermediary traffic. **[BellSouth shall report quarterly PLU factors to AT&T. BellSouth will continue to accept from AT&T the current monthly PLU factors provided under the previous agreement. Such monthly PLU factors will continue for a period of twelve (12) months from the date of this Agreement. At the end of the twelve (12) month period, AT&T will begin to provide quarterly PLU factors, beginning with the quarter immediately following the anniversary date, unless AT&T asserts that the monthly reporting demonstrates that the PLU has not stabilized, in which case AT&T will continue to provide monthly PLU factors for an additional six (6) month period or until the Parties agree that the PLU has stabilized, whichever occurs first. For the remainder of the period covered by this Agreement, AT&T will report quarterly factors** by the first of January, April, July and October of each year. BellSouth and AT&T shall also provide a positive report updating the PLU. Detailed requirements associated with PLU reporting shall be as set forth in BellSouth's Standard Percent Local Use Reporting Platform for Interconnection Purchasers, as it is amended from time to time during this Agreement. Notwithstanding the foregoing, where the terminating company has message recording technology that identifies the traffic terminated, such information, in lieu of the PLU factor, shall at the company's option be utilized to determine the appropriate reciprocal compensation to be paid.

5.4 Percentage Interstate Usage. For combined interstate and intrastate AT&T traffic terminated by BellSouth over the same facilities, AT&T will be required to provide a projected Percentage Interstate Usage ("PIU") to BellSouth. All jurisdictional report requirements, rules and regulations for Interexchange Carriers specified in BellSouth's Intrastate Access Services Tariff will apply to AT&T. After interstate and intrastate traffic percentages have been determined by use of PIU procedures, the PLU factor will be used for application and billing of local interconnection. Notwithstanding the foregoing, where the terminating company has message recording technology that identifies the traffic terminated, such information, in lieu of the PLU factor, shall at the company's option be utilized to determine the appropriate reciprocal compensation to be paid. Audits. On thirty (30) days' written notice, each Party must provide the other the ability and opportunity to conduct an annual audit of the traffic reported. BellSouth and AT&T shall retain records of call detail for a minimum of nine months from which a PLU and/or PIU can be ascertained. The audit shall be accomplished during normal business hours at an office designated by the Party being audited. Audit requests shall not be submitted more frequently than one (1) time per calendar year. Audits shall be performed by a mutually acceptable independent auditor paid for by the Party requesting the audit. The PLU and/or PIU shall be adjusted based upon the audit results and shall apply to the usage for the quarter the audit was completed, to the usage for the quarter prior to the completion of the audit, and to the usage for the two quarters following the completion of the audit. If, as a result of an audit, either Party is found to have overstated the PLU and/or PIU by twenty percentage points (20%) or more, that Party shall reimburse the auditing Party for the cost of the audit.

5.5 Compensation for IntraLATA Toll Traffic

5.5.1 IntraLATA Toll Traffic. IntraLATA Toll Traffic is defined as any telephone call that originates and terminates in the same LATA and is billed by the originating Party as a toll call.

5.5.2 Compensation for IntraLATA Toll Traffic. For terminating its IntraLATA Toll Traffic on the other Party's network, the originating Party will pay the terminating Party's intrastate or interstate terminating switched access tariff rates as set forth in the effective intrastate or interstate access services tariff, whichever is appropriate. The appropriate charges will be determined by the routing of the call. If BellSouth or AT&T is the other Party's end user's presubscribed interexchange carrier or if an end user uses BellSouth or AT&T as an interexchange carrier on a 101XXXX basis, BellSouth or AT&T will charge the other Party the appropriate tariff charges for originating switched access services.

5.5.3 Compensation for 800 Traffic. Each Party shall compensate the other pursuant to the appropriate switched access charges, including the database query charge as set forth in the each Party's intrastate or interstate switched access tariffs.

5.5.4 Records for 8YY Billing. Each Party will provide to the other the appropriate records necessary for billing intraLATA 8YY customers. Records required for billing end users purchasing 8YY Services shall be provided pursuant to Attachment 6 of this Agreement, incorporated herein by this reference.

5.5.5 Transit Traffic Service. BellSouth shall provide tandem switching and transport services for AT&T's transit traffic. Transit traffic is traffic originating on AT&T's network that is switched and/or transported by BellSouth and delivered to a third party's network, or traffic originating on a third Party's network that is switched and/or transported by BellSouth and delivered to AT&T's network . Rates for local transit traffic shall be the applicable call transport and termination charges as set forth in Exhibit A to this Attachment. Rates for intraLATA toll and Switched Access transit traffic shall be the applicable call transport and termination charges as set forth in BellSouth Interstate or Intrastate Switched Access tariffs. Switched Access transit traffic presumes that AT&T's end office is subtending the BellSouth Access Tandem for switched access traffic to and from AT&T's end users utilizing BellSouth facilities, either by direct trunks with the IXC, or via the BellSouth Access Tandem. Billing associated with all transit traffic shall be pursuant to MECAB procedures. Wireless Type 1 traffic shall not be treated as transit traffic from a routing or billing perspective. Wireless Type 2A traffic shall not be treated as transit traffic from a routing or billing perspective until BellSouth and the Wireless carrier have the capability to properly meet-point-bill in accordance with Multiple Exchange Carrier Access Billing ("MECAB") guidelines.

6. **[OSS Rates – To the extend AT&T orders a Service and Element for the purpose of interconnection, the OSS Rates set forth in Exhibit __ of Attachment 2, incorporated herein by this reference, shall apply.] [OPEN-AT&T]**

AT&T'S PROPOSED EXHIBIT A

LOCAL INTERCONNECTION RATES

DESCRIPTION	USOC	AT&T PROPOSED *
LOCAL INTERCONNECTION (CALL TRANSPORT AND TERMINATION)		
End Office Switching, per mou		TBD
Tandem Switching, per mou		TBD
Common (Shared) Transport		
Common (Shared) Transport per mile per mou		TBD
Common (Shared) Transport Facilities Termination per mou		TBD
INTEROFFICE TRANSMISSION		
Interoffice Transport - All Dedicated Transport Listed Below- NRC - Tariff Service to UNE		TBD
Interoffice Transport - Dedicated - VG		
Interoffice Transport - Dedicated - 2-Wire VG - per mile	1L5XX	TBD
Interoffice Transport - Dedicated - 2-Wire VG - facilities termination per month	1L5XX	TBD
NRC - Connect 1st	1L5XX	TBD
NRC - Connect Add'l	1L5XX	TBD
NRC - Manual Service Order - First	1L5XX	TBD
NRC -Manual Service Order - Add'l	1L5XX	TBD
Interoffice Transport - Dedicated - DS0 - 56/64 KBPS		
Interoffice Transport - Dedicated - DS0 - per mile per month	1L5XX	TBD
Interoffice Transport - Dedicated - DS0 - facilities termination per month	1L5XX	TBD
NRC - Connect 1st	1L5XX	TBD
NRC - Connect Add'l	1L5XX	TBD
NRC - Manual Service Order - First	1L5XX	TBD
NRC -Manual Service Order - Add'l	1L5XX	TBD
Interoffice Transport - Dedicated - DS1		
Interoffice Transport - Dedicated - DS1 - per mile per month	1L5XX	TBD
Interoffice Transport - Dedicated - DS1 - facilities termination per month	1L5XX	TBD
NRC - Connect 1st	1L5XX	TBD
NRC - Connect Add'l	1L5XX	TBD
NRC - Manual Service Order - First	1L5XX	TBD
NRC -Manual Service Order - Add'l	1L5XX	TBD
NRC - Interoffice Transport - Subsequent Trunk Activation, DS1 and DS3		TBD
Interoffice Transport - Dedicated - DS3		
Interoffice Transport - Dedicated - DS3 - per mile per month	1L5XX	TBD
Interoffice Transport - Dedicated - DS3 - facilities termination per month	1L5XX	TBD
NRC - 1st	1L5XX	TBD

	NRC - Add'l	1L5XX	TBD
	NRC - Manual Service Order - First	1L5XX	TBD
	NRC -Manual Service Order - Add'l	1L5XX	TBD
Local Channel - Dedicated			
Local Channel - All Dedicated Local Channels NRC - Tariff Service to UNE		N/A	TBD
Local Channel - Dedicated - 2-Wire VG		N/A	TBD
	NRC - Connect 1st	N/A	TBD
	NRC - Connect Add'l	N/A	TBD
	NRC - Manual Service Order - First	N/A	TBD
	NRC -Manual Service Order - Add'l	N/A	TBD
Local Channel - Dedicated - 4-Wire VG		N/A	TBD
	NRC - Connect 1st	N/A	TBD
	NRC - Connect Add'l	N/A	TBD
	NRC - Manual Service Order - First	N/A	TBD
	NRC -Manual Service Order - Add'l	N/A	TBD
Local Channel - Dedicated - DS1		N/A	TBD
	NRC - Connect 1st	N/A	TBD
	NRC - Connect Add'l	N/A	TBD
	NRC - Manual Service Order - First	N/A	TBD
	NRC -Manual Service Order - Add'l	N/A	TBD
Local Channel - Dedicated – DS3		N/A	TBD
	NRC - Connect 1st	N/A	TBD
	NRC - Connect Add'l	N/A	TBD
	NRC - Manual Service Order - First	N/A	TBD
	NRC -Manual Service Order - Add'l	N/A	TBD
Local Channel with Interoffice Transmission - Dedicated			
2-W VG Local Channel with DS1 Interoffice Transport - Dedicated			
Local Channel - Dedicated - 2-Wire Voice Grade			TBD
Interoffice Transport - Dedicated - DS1 - per mile			TBD
Interoffice Transport - Dedicated - DS1 - per facility termination			TBD
Interoffice Transport - Dedicated DS1 System			TBD
Interoffice Transport - Voice Grade Plug-in			TBD
	NRC - 1st		TBD
	NRC - Add'l		TBD
	NRC - Manual Service Order - First		TBD
	NRC -Manual Service Order - Add'l		TBD

4-W VG Local Channel with DS1 Interoffice Transport - Dedicated		
Local Channel - Dedicated - 4-Wire Voice Grade		TBD
Interoffice Transport - Dedicated - DS1 - per mile		TBD
Interoffice Transport - Dedicated - DS1 - per facility termination		TBD
Interoffice Transport - Dedicated DS1 System		TBD
Interoffice Transport - Voice Grade Plug-in		TBD
NRC - 1st		TBD
NRC - Add'l		TBD
NRC - Manual Service Order - First		TBD
NRC -Manual Service Order - Add'l		TBD
4-W DS1 Local Channel with DS3 Interoffice Transport - Dedicated		
Local Channel - Dedicated - DS1		TBD
Interoffice Transport - Dedicated - DS3 - per mile		TBD
Interoffice Transport - Dedicated - DS3 - per facility termination		TBD
Interoffice Transport - Dedicated DS3 System		TBD
Interoffice Transport - DS1 Card or W-DCS port		TBD
NRC - 1st		TBD
NRC - Add'l		TBD
NRC - Manual Service Order - First		TBD
NRC -Manual Service Order - Add'l		TBD
4-W DS1 Local Channel with DS1 Interoffice Transport - Dedicated		
Local Channel - Dedicated - DS1		TBD
Interoffice Transport - Dedicated - DS1 - per mile		TBD
Interoffice Transport - Dedicated - DS1 - per facility termination		TBD
NRC - 1st		TBD
NRC - Add'l		TBD
NRC - Manual Service Order - First		TBD
NRC -Manual Service Order - Add'l		TBD
NRC - Interoffice Transport - Subsequent Trunk Activation		TBD
DS3 Local Channel with DS3 Interoffice Transport - Dedicated		
Local Channel - Dedicated - DS3		TBD
Interoffice Transport - Dedicated - DS3 - per mile		TBD
Interoffice Transport - Dedicated - DS3 - per facility termination		TBD
NRC - 1st		TBD
NRC - Add'l		TBD
NRC - Manual Service Order - First		TBD
NRC -Manual Service Order - Add'l		TBD

NOTES: 1 If no rate is identified in the contract, the rate for the specific service or function will be as negotiated by the parties upon request by either party. 2 TBD - To be Determined in docket No.990649-TP			

Attachment 3

BELLSOUTH'S PROPOSED EXHIBIT A

BellSouth / AT&T
Rates
Local Interconnection

Cost Reference No.		UNBUNDLED NETWORK ELEMENT	Proposed Rates		
				Nonrecurring	
			Recurring	First	Additional
C.0	UNBUNDLED SWITCHING AND LOCAL INTERCONNECTION				
C.1	END OFFICE SWITCHING				
	C.1.1	End Office Switching Function, Per MOU	$.0008941		
	C.1.2	End Office Trunk Port - Shared, Per MOU	$.000191		
C.2	TANDEM SWITCHING				
	C.2.1	Tandem Switching Function Per MOU	$.0001545		
	C.2.2	Tandem Trunk Port - Shared, Per MOU	$.0002737		
D.0	UNBUNDLED TRANSPORT AND LOCAL INTEROFFICE TRANSPORT				
D.1	COMMON TRANSPORT				
	D.1.1	Common Transport - Per Mile, Per MOU	$.0000039		
	D.1.2	Common Transport - Facilities Termination Per MOU	$.0004615		
D.2	INTEROFFICE TRANSPORT - DEDICATED - VOICE GRADE				
	D.2.1	Interoffice Transport - Dedicated - 2-Wire Voice Grade - Per Mile	$.01		
	D.2.2	Interoffice Transport - Dedicated - 2- Wire Voice Grade - Facility Termination	$26.72	$81.73	$55.26
		Interoffice Transport - Dedicated - 2- Wire Voice Grade - Facility Termination - Disconnect Only		$31.26	$12.88
D.3	INTEROFFICE TRANSPORT - DEDICATED - DS0 - 56/64 KBPS				
	D.3.1	Interoffice Transport - Dedicated - DS0 - Per Mile	$.01		
	D.3.2	Interoffice Transport - Dedicated - DS0 - Facility Termination	$19.46	$81.74	$55.26
		Interoffice Transport - Dedicated - DS0 - Facility Termination - Disconnect Only		$31.26	$12.88
D.4	INTEROFFICE TRANSPORT - DEDICATED - DS1				
	D.4.1	Interoffice Transport - Dedicated - DS1 - Per Mile	$.2035		
	D.4.2	Interoffice Transport - Dedicated - DS1 - Facility Termination	$93.31	$179.99	$164.95
		Interoffice Transport - Dedicated - DS1 - Facility Termination - Disconnect Only		$30.54	$26.97
D.5	LOCAL CHANNEL - DEDICATED				
	D.5.1	Local Channel - Dedicated - 2-Wire Voice Grade - Zone 1	$24.75	$389.37	$66.88
		Zone 2	$38.52		
		Zone 3	NA		
		Local Channel - Dedicated - 2-Wire Voice Grade - Disconnect Only		$68.45	$5.97
	D.5.2	Local Channel - Dedicated - 4-Wire Voice Grade - Zone 1	$25.92	$390.25	$67.75
		Zone 2	$39.69		
		Zone 3	NA		
		Local Channel - Dedicated - 4-Wire Voice Grade - Disconnect Only		$69.32	$6.85
	D.5.7	Local Channel - Dedicated - DS3 - Per Mile	$9.32		
	D.5.8	Local Channel - Dedicated - DS3 - Facility Termination	$560.39	$910.45	$532.19
		Local Channel - Dedicated - DS3 - Facility Termination - Disconnect Only		$223.20	$156.12
	D.5.10	Local Channel - Dedicated - OC3 - Per Mile	$7.83		
	D.5.11	Local Channel - Dedicated - OC3 - Facility Termination	$940.35	$974.02	$412.05

BellSouth / AT&T
Rates
Local Interconnection

Cost Reference No.		UNBUNDLED NETWORK ELEMENT	Proposed Rates		
				Nonrecurring	
			Recurring	First	Additional
		Local Channel - Dedicated - OC3 - Facility Termination - Disconnect Only		$112.44	$109.19
	D.5.13	Local Channel - Dedicated - OC12 - Per Mile	$11.18		
	D.5.14	Local Channel - Dedicated - OC12 - Facility Termination	$2,753	$1,193	$412.05
		Local Channel - Dedicated - OC12 - Facility Termination - Disconnect Only		$112.44	$109.19
	D.5.16	Local Channel - Dedicated - OC48 - Per Mile	$36.67		
	D.5.17	Local Channel - Dedicated - OC48 - Facility Termination	$1,944	$1,193	$412.05
		Local Channel - Dedicated - OC48 - Facility Termination - Disconnect Only		$112.44	$109.19
	D.5.19	Local Channel - Dedicated - OC48 - Interface OC12 on OC48	$586.28	$547.98	$314.49
		Local Channel - Dedicated - OC48 - Interface OC12 on OC48 - Disconnect Only		$112.44	$109.19
	D.5.21	Local Channel - Dedicated - STS-1 - Facility Termination	$569.67	$910.45	$532.19
		Local Channel - Dedicated - STS-1 - Facility Termination - Disconnect Only		$223.20	$156.12
	D.5.23	Local Channel - Dedicated - STS-1 -Per Mile	$9.32		
	D.5.24	Local Channel - Dedicated - DS1 - Zone 1	$39.39	$357.86	$309.95
		Zone 2	$51.18		
		Zone 3	$91.98		
		Local Channel - Dedicated - DS1 - Disconnect Only		$41.46	$28.51
D.6	INTEROFFICE TRANSPORT - DEDICATED - DS3				
	D.6.1	Interoffice Transport - Dedicated - DS3 - Per Mile	$4.25		
	D.6.2	Interoffice Transport - Dedicated - DS3 - Facility Termination	$1,130	$562.06	$328.16
		Interoffice Transport - Dedicated - DS3 - Facility Termination - Disconnect Only		$112.44	$109.19
D.7	INTEROFFICE TRANSPORT - DEDICATED - OC3				
	D.7.1	Interoffice Transport - Dedicated - OC3 - Per Mile	$8.38		
	D.7.2	Interoffice Transport - Dedicated - OC3 - Facility Termination	$3,043	$876.46	$314.49
		Interoffice Transport - Dedicated - OC3 - Facility Termination - Disconnect Only		$112.44	$109.19
D.8	INTEROFFICE TRANSPORT - DEDICATED - OC12				
	D.8.1	Interoffice Transport - Dedicated - OC12 - Per Mile	$26.91		
	D.8.2	Interoffice Transport - Dedicated - OC12 - Facility Termination	$11,685	$1,095	$314.49
		Interoffice Transport - Dedicated - OC12 - Facility Termination - Disconnect Only		$112.44	$109.19
D.9	INTEROFFICE TRANSPORT - DEDICATED - OC48				
	D.9.1	Interoffice Transport - Dedicated - OC48 - Per Mile	$34.66		
	D.9.2	Interoffice Transport - Dedicated - OC48 - Facility Termination	$12,554	$1,095	$314.49
		Interoffice Transport - Dedicated - OC48 - Facility Termination - Disconnect Only		$112.44	$109.19
	D.9.4	Interoffice Transport - Dedicated - OC48 - Interface OC12 on OC48	$1,208	$547.98	$314.49
		Interoffice Transport - Dedicated - OC48 - Interface OC12 on OC48 - Disconnect Only		$112.44	$109.19
D.10	INTEROFFICE TRANSPORT - DEDICATED - STS-1				
	D.10.1	Interoffice Transport - Dedicated - STS-1 - Per Mile	$4.25		

BellSouth / AT&T
Rates
Local Interconnection

Cost Reference No.		UNBUNDLED NETWORK ELEMENT	Proposed Rates		
				Nonrecurring	
			Recurring	First	Additional
	D.10.2	Interoffice Transport - Dedicated - STS-1 - Facility Termination	$1,114	$562.06	$328.16
		Interoffice Transport - Dedicated - STS-1 - Facility Termination - Disconnect Only		$112.44	$109.19
D.12	INTEROFFICE TRANSPORT - DEDICATED - 4-WIRE VOICE GRADE				
	D.12.1	Interoffice Transport - Dedicated - 4-Wire Voice Grade - Per Mile	$.01		
	D.12.2	Interoffice Transport - Dedicated - 4-Wire Voice Grade - Facility Termination	$23.82	$81.73	$55.26
		Interoffice Transport - Dedicated - 4-Wire Voice Grade - Facility Termination - Disconnect Only		$31.26	$12.88
A.18	MULTIPLEXERS				
	A.18.1	Channelization - Channel System DS1 to DS0	$154.74	$183.57	$126.16
		Channelization - Channel System DS1 to DS0 - Disconnect Only		$19.68	$18.29
	A.18.2	Interface Unit - Interface DS1 to DS0 - OCU-DP Card	$2.22	$13.26	$9.50
	A.18.3	Interface Unit - Interface DS1 to DS0 - BRITE Card	$3.86	$13.26	$9.50
	A.18.4	Interface Unit - Interface DS1 to DS0 - Voice Grade Card	$1.46	$13.26	$9.50
	A.18.5	Channelization - Channel System DS3 to DS1	$222.61	$359.20	$299.24
		Channelization - Channel System DS3 to DS1 - Disconnect Only		$189.04	$186.37
	A.18.6	Interface Unit - Interface DS3 to DS1	$14.51	$13.26	$9.50

EXHIBIT B: SPACE LICENSE

1. AT&T, at its sole discretion, may license BellSouth to situate BellSouth equipment in the AT&T central office and to utilize AT&T site support services in the AT&T central office such as power, heating, ventilation, air conditioning and security for such equipment, for the sole purpose of interconnection. ~~AT&T's agreement to license space in the AT&T central office will not be unreasonably withheld.~~ Such licenses and site support services are referred to herein collectively as a "Space License." **If AT&T denies BellSouth a Space License in a particular AT&T central office, AT&T shall assure that BellSouth may interconnect with AT&T's network through an alternative arrangement reasonably acceptable to both parties, including without limitation, lease of AT&T's facilities directly connected to BellSouth's network; mid-span fiber meet; space in an adjacent premises; and an arrangement by which AT&T would assume ownership and control of equipment provided by BellSouth to be located in the AT&T central office for the sole purpose of interconnection. [OPEN AT&T/BST]**

2. The allowable network interfaces under a Space License are DS1, DS3 or another network interface as mutually agreed upon between the Parties to this Agreement.

3. Space Licenses are available subject to the availability of space and site support services in each AT&T central office. To establish a Space License, BellSouth must complete and submit a questionnaire providing requested information to support new space and site support services or to provide additional capacity for existing arrangements.

3.1 Among the information to be provided in the questionnaire, BellSouth must identify the quantity, manufacturer, type and model of any equipment to be installed; the quantity, type and specifications of any transmission cable to be installed (collectively "Licensed Facilities"). The space in the AT&T central office in which BellSouth's equipment is or is to be located is referred to herein as the "Equipment Space."

3.2 **[BellSouth is responsible for the installation of Licensed Facilities in accordance with AT&T's installation processes and procedures. BellSouth will use AT&T's certified vendors for the installation of License Facilities.] [OPEN-AT&T/BST]**

3.3 If BellSouth desires to modify its request, prior to notification from AT&T regarding availability, BellSouth may do so by requesting that AT&T cancel the original request providing a new questionnaire to AT&T to process.

4. Following receipt of the questionnaire, AT&T will determine whether there is sufficient AT&T central office space and site support services to meet the request contained in BellSouth's questionnaire. AT&T will notify BellSouth in writing within thirty (30) business days whether there is sufficient AT&T central office space available for each such request.

5. Upon receiving written notification of the availability of AT&T central office space from AT&T, BellSouth will provide written verification that it still requires such AT&T central office space. This written notification is BellSouth's firm order for each AT&T central office space requested, and will constitute an executed Space License under the terms of this Exhibit B.

6. The rates and charges are to be negotiated by the Parties.

7. AT&T agrees to provide site support services as follows:

7.1 AT&T will design, engineer, furnish, install, and maintain cable racks for BellSouth's use.

7.2 AT&T will design, engineer, furnish, install, and maintain a battery distribution fuse board ("BDFB") from which AT&T will supply DC power to BellSouth.

7.3 AT&T will provide common use convenience outlets (120V) as required for test equipment, etc. within Equipment Space.

7.4 AT&T will maintain temperature and humidity conditions for the Equipment Space within substantially the same ranges that AT&T maintains for its own similar equipment.

8. AT&T will provide the amount of space requested by BellSouth unless AT&T reasonably determines the quantity of space requested is not available. If the amount of requested space is not available, AT&T will specify the dimensions of the Equipment Space available and will specify any physical or space separation requirements. If the amount of space requested is available, AT&T will provide the location of the

space and will specify any physical or space separation requirements.

9. For the purpose of performing work for which BellSouth is responsible under this Exhibit B, AT&T licenses BellSouth to enter and exit the Equipment Space through portions of the AT&T central office as designated by AT&T. Unless a service outage is occurring or appears to be imminent, BellSouth shall perform its work in the AT&T central office during regular business hours as designated from time to time by AT&T. BellSouth and AT&T will establish contact lists and procedures for after hours entry to the AT&T central office.

10. BellSouth will provide a twenty-four (24) hour local or toll free telephone number which AT&T can use to verify the authority of such personnel to enter the Equipment Space. BellSouth shall furnish to AT&T, and keep current, samples of the identifying credentials to be carried by all BellSouth employees authorized to enter the Equipment Space. Notwithstanding Section 10 of the General Terms and Conditions of this Agreement, incorporated herein by this reference, or except in the case of willful misconduct or gross negligence on the part of AT&T, BellSouth hereby releases AT&T, AT&T's Affiliates and their officers, directors, employees, agents, contractors, and suppliers from liabilities arising from the acts or omissions of any person who possesses a BellSouth employee identification badge and who was verified and admitted by AT&T.

11. While in the AT&T central office, employees of BellSouth **[and its contractors]** must comply at all times with AT&T's security and safety procedures and requirements. **[OPEN-AT&T]** AT&T may refuse entry to, or require the departure of, any person who is disorderly or who has failed to comply with AT&T's procedures and requirements after being notified of them.

12. **[~~BellSouth will be responsible for selecting its contractors and causing their compliance with this Exhibit B.~~] [OPEN-AT&T]**

13. Each Party shall cause its employees and contractors to act in a careful and workmanlike manner to avoid damage to the other Party's property and the property of others in and around AT&T's central office.

14. BellSouth's employees **[and contractors]** shall abide by the requirements of Section 5.10, Interference or Impairment, of Attachment 4, incorporated herein by this reference. **[OPEN-AT&T]**

15. In addition to the Licensed Facilities, BellSouth may bring into the Equipment Space whatever tools and equipment necessary to install and maintain its equipment. BellSouth will be responsible for the care and safeguarding of all such items. BellSouth may not bring into the AT&T central office any of the following: wet cell batteries, explosives, flammable liquids or gases, alcohol, controlled substances, weapons, cameras, tape recorders, and similar items.

16. AT&T and its designees may inspect or observe the Equipment Space, the space designated by AT&T for BellSouth transmission cable, the Licensed Facilities, and any work performed by or behalf of BellSouth in the AT&T central office, at any time. If the Equipment Space is surrounded by a security enclosure, BellSouth shall furnish AT&T with all mechanisms and information needed for entry to the Equipment Space.

17. AT&T and BellSouth intend that the Licensed Facilities, whether or not physically affixed to the AT&T central office, shall not be construed to be fixtures. BellSouth (or the lessor of BellSouth equipment, if applicable) will report the Licensed Facilities as its personal property wherever required by applicable laws, and will pay all taxes levied upon the Licensed Facilities.

18. BellSouth agrees not to sell, convey, or lease BellSouth transmission cable under any circumstances, except for a conveyance of BellSouth transmission cable to AT&T or to another space licensee upon termination of the applicable Space License. BellSouth further agrees not to cause, suffer, or permit BellSouth transmission cable to become encumbered by a lien, trust, pledge, or security interest as a result of rights granted by BellSouth or any act or omission of BellSouth. If BellSouth transmission cable becomes so encumbered, BellSouth agrees to discharge the obligation within thirty (30) days after receiving notice of the encumbrance.

19. The licenses granted by this Agreement are non-exclusive personal privileges allowing BellSouth to situate the Licensed Facilities in the locations indicated by AT&T. These licenses and the payments by BellSouth under this Agreement do not create or vest in BellSouth (or in any other person) any property right or interest of any nature in any part of the AT&T central office.

20. The licenses granted to BellSouth under this Agreement shall be subordinate to any mortgages or deeds of trust that may now exist or

may in the future be placed upon any AT&T central office; to any and all advances to be made under such mortgages or deeds of trust; and to the interest thereon and all renewals, replacements, or extensions thereof.

21. AT&T may relocate the licensed space, or the AT&T central office, or both upon thirty (30) days prior written notice to BellSouth. If relocation of Licensed Facilities is required, the party that originally installed such Licensed Facilities will be responsible for relocating them. Any such relocation work that is AT&T's responsibility and is performed by AT&T will be without charge to BellSouth. AT&T will reimburse BellSouth for the reasonable cost of such relocation work performed by BellSouth, and AT&T will provide at its own expense any additional or replacement cable racks and BellSouth transmission cable needed to accommodate the relocation of the installation. AT&T and BellSouth will work together in good faith to minimize any disruption of service in connection with such relocation.

22. Licensed Facilities will be furnished, installed and maintained in accordance with the following:

22.1 BellSouth agrees to furnish all Licensed Facilities.

22.2 BellSouth agrees to install the Licensed Facilities. BellSouth agrees to comply with specifications and processes furnished by AT&T for installation performed by BellSouth.

22.3 BellSouth agrees to install the DC power supply and single circuit (battery and ground) from its fuse panel located in BellSouth's frame to the designated AT&T power source. BellSouth will distribute the power among its equipment within the Equipment Space.

22.4 [BellSouth agrees to maintain in good working order all BellSouth equipment in Equipment Space. AT&T agrees to repair BellSouth transmission cable. BellSouth is not permitted to repair installed BellSouth transmission cable in order to avoid possible harm to other transmission cables.] [OPEN-AT&T]

22.5 [BellSouth may use contractors to perform installation and maintenance for which BellSouth is responsible. AT&T consents to use of those contractors listed on a then current AT&T approved list of BellSouth submitted contractors. Use of any other contractors shall require AT&T's prior written consent,

which shall not be unreasonably withheld.] [OPEN-AT&T/BST]

22.6 BellSouth may, at its own discretion and expense, choose to install its equipment in locked cabinets, provided that space and configuration will permit such. If BellSouth chooses to install its equipment in locked cabinets, BellSouth shall leave the appropriate keys with AT&T and agrees to allow AT&T the right of entry to such cabinets.

23. Under the Space Licenses, AT&T performs no communications services, provides no goods except for short lengths of wire or cable and small parts incidental to the services furnished by AT&T, and provides no maintenance for any BellSouth equipment in Equipment Space. AT&T warrants that the services provided under this Agreement will be performed in a workmanlike manner and in accordance with AT&T technical specifications and that the incidental material provided by AT&T shall be free from defects. AT&T MAKES NO OTHER WARRANTIES, EXPRESS OR IMPLIED, AND SPECIFICALLY DISCLAIMS ANY WARRANTIES OF MERCHANTABILITY OR FITNESS FOR A PARTICULAR PURPOSE.

24. In addition to any other rights or remedies that AT&T may have under this Agreement or at law, AT&T may terminate the applicable Space License if any of the following events occurs and is not corrected within thirty (30) days after written notice to cure:

24.1 BellSouth fails to pay charges due or fails to comply with any of the terms or conditions of this Exhibit B.

24.2 BellSouth fails to comply with applicable laws or is in any way prevented by the order or action of any court, or other governmental entity from performing any of its obligations under this Exhibit B.

25. In the event that a Space License is terminated for any reason, the Parties will act in accordance with the following:

25.1 Within thirty (30) days after termination of a Space License, BellSouth will, at its sole expense, remove all BellSouth equipment in Equipment Space and restore the Equipment Space to its previous condition, normal wear and tear excepted. If BellSouth fails to complete such removal and restoration within thirty (30) days after termination of the applicable Space License, AT&T may, at its option, upon ten (10) days written notice to BellSouth, perform the removal and restoration at BellSouth's sole risk and expense.

25.2 Because removal of installed BellSouth transmission cable may cause damage to other cables or fiber, BellSouth agrees to relinquish or transfer its transmission cable to AT&T or to another AT&T space licensee in lieu of removal. Upon termination of the applicable Space License, unless transferred to another AT&T space licensee, all BellSouth transmission cable will be automatically conveyed to AT&T, thereby becoming the property of AT&T, free of any interest or lien of any kind by BellSouth (or by any person claiming through BellSouth). At AT&T's request, BellSouth will promptly execute and deliver to AT&T a bill of conveyance or such other assurances as may be requisite to confirm or perfect the transfer of BellSouth transmission cable to AT&T.

25.3 If no monies are owed by BellSouth to AT&T under this Agreement, AT&T agrees to deliver such removed equipment to BellSouth's last known business address or to a domestic location designated by BellSouth, at BellSouth's sole risk and expense.

[Agreement of this Space License is contingent upon approval of the following items to be furnished by AT&T to BellSouth:

- **Questionnaire referred to in sections 3 and 4.**
- **Installation process and procedures referred to in section 3.2.**
- **List of AT&T's certified vendors referred to in section 3.2.**
- **Security and safety procedures and requirements referred to in section 11.**
- **Specifications and processes referred to in section 22.2.**
- **Emergency repair process for inclusion in section 22.4.]**

Preferred Interconnection Architecture

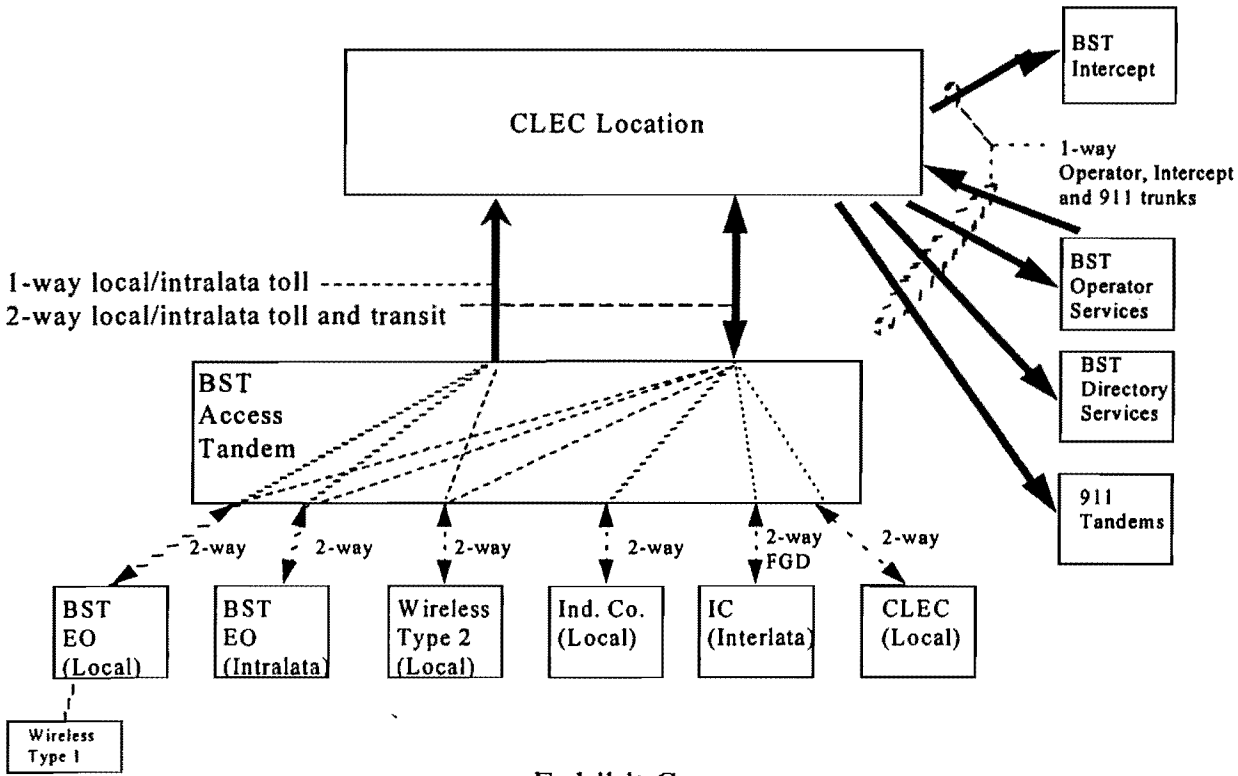

Exhibit C

One Way Trunking Interconnection

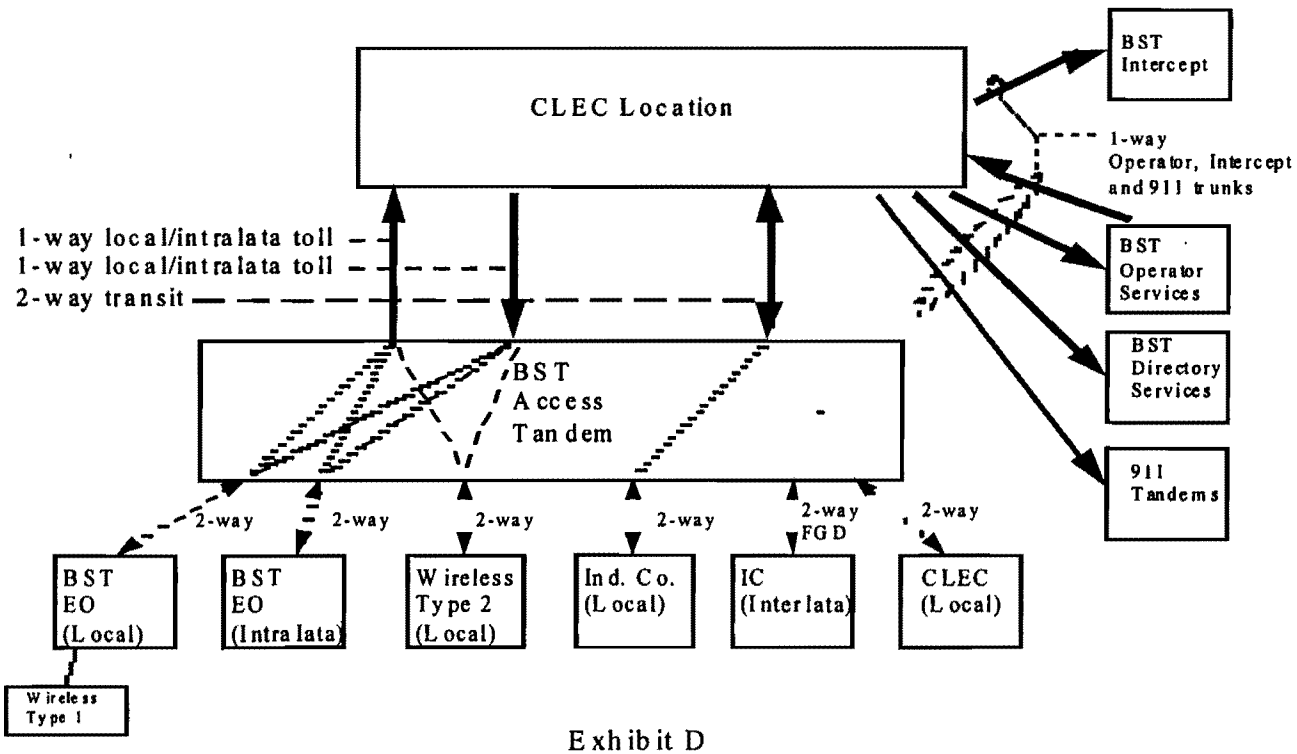

Exhibit D

Two Way Trunking Interconnection

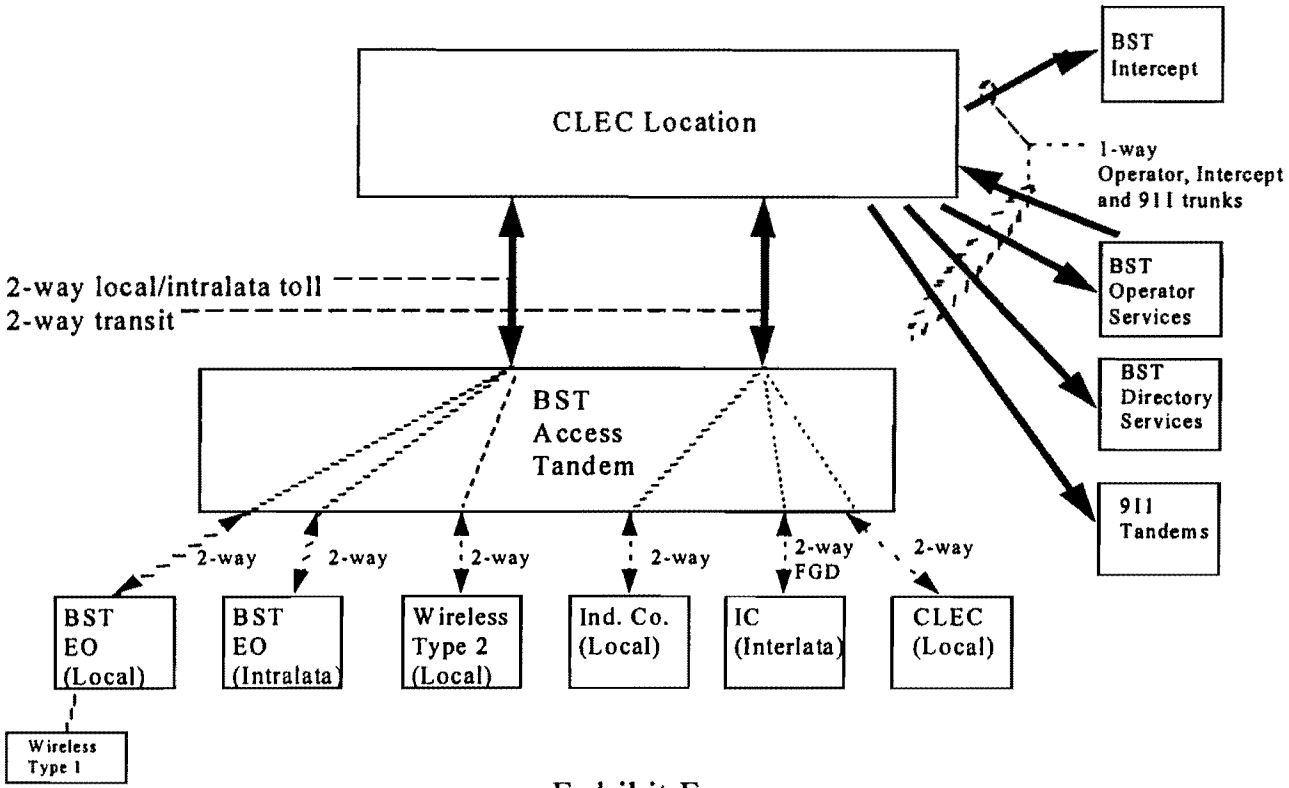

Exhibit E

SuperGroup Interconnection Architecture

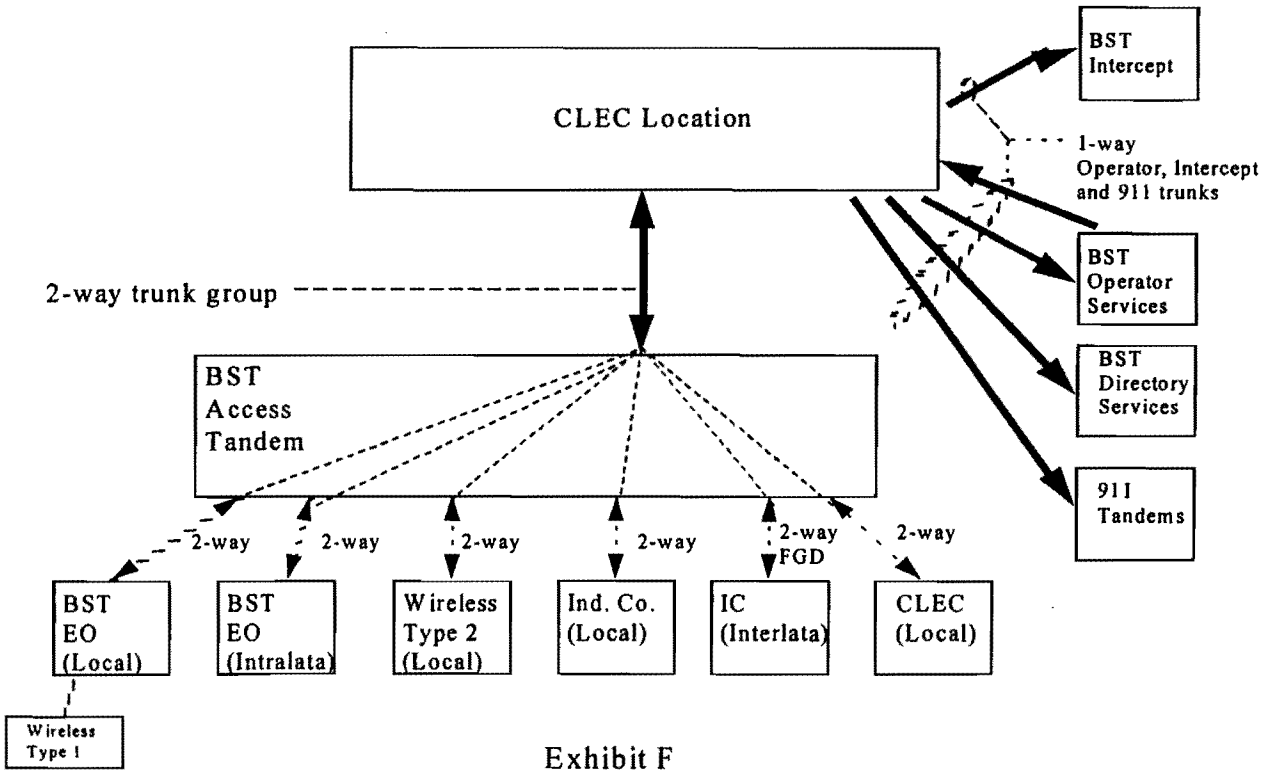

Exhibit F

AGREEMENT

between

BellSouth Telecommunications, Inc.

and AT&T Communications of the Southern States, Inc.

Effective Date: June 10, 1997

FLORIDA

TABLE OF CONTENTS

Section

AGREEMENT
PREFACE
RECITALS
DEFINITIONS and ACRONYMS
GENERAL TERMS AND CONDITIONS
1. Provision of Local Service and Unbundled Network Elements
2. Term of Agreement
3. Termination of Agreement; Transitional Support
4. Good Faith Performance
5. Option to Obtain Local Services, Network Elements and Combinations Under Other Agreements
6. Responsibility of Each Party
7. Governmental Compliance
8. Responsibility For Environmental Contamination
9. Regulatory Matters
10. Liability and Indemnity
11. Audits and Inspections
12. Remedies for Failure to Meet DMOQs
13. Customer Credit History - DELETED
14. Force Majeure
15. Certain Federal, State and Local Taxes
16. Alternative Dispute Resolution
17. Notices

FLORIDA PUBLIC SERVICE COMMISSION
DOCKET NO. 020919-TP EXHIBIT NO. 19
COMPANY/ WITNESS: BellSouth/AT&T Agreement
DATE: 5-07-03

18. Confidentiality and Proprietary Information
19. Branding
20. Directory Listings Requirements
21. Subscriber List Information/Local Number Portability
22. Miscellaneous
PART I: LOCAL SERVICES RESALE
23. Telecommunications Services Provided for Resale
24. General Terms and Conditions for Resale
25. Requirements for Specific Services
26. DELETED
27. Support Functions
28. Service Functions
PART II: UNBUNDLED NETWORK ELEMENTS
29. Introduction
30. Unbundled Network Elements
PART III: ANCILLARY FUNCTIONS
31. Introduction
32. BellSouth Provision of Ancillary Functions
33. Standards for Ancillary Functions
PART IV: PRICING
34. General Principles
35. Local Service Resale
36. Unbundled Network Elements
37. Compensation For Call and Transport Termination
38. Ancillary Functions
39. Local Number Portability
40. Recorded Usage Data
41. Electronic Interfaces
a. TABLE 1 - Unbundled Network Elements
b. TABLE 2 - Physical and Virtual Collocation
c. Virtual Collocation
d. TABLE 3 - Rights of Way
e. TABLE 4 - Pole Attachments
f. TABLE 5 - Local Number Portability
g. TABLE 6 - Recorded Usage Data

SIGNATURE

PUC APPROVAL ORDER

AMENDMENT – 7/14/99

ATTACHMENTS

Attachment 1	Alternative Dispute Resolution
Attachment 2	Services Description: Unbundled Network Elements
Attachment 3	Service Description: Ancillary Functions
Attachment 4	Provisioning and Ordering
Attachment 5	Maintenance
Attachment 6	Connectivity Billing and Recording
Attachment 7	Provision of Customer Usage Data
Attachment 8	Local Number Portability
Attachment 9	Network Security
Attachment 10	Acronyms
Attachment 11	Definitions
Attachment 12	Performance Measurement
Attachment 13	BAPCO Agreement - (NOT AVAILABLE)
Attachment 14	Bona Fide Request Process
Attachment 15	Interface Requirements for Ordering and Provisioning, Maintenance and Repair, and Pre-Ordering

AGREEMENT

PREFACE

This Agreement, which shall become effective as of the 10th day of June, 1997, is entered into by and between AT&T Communications of the Southern States, Inc., a New York Corporation, having an office at 1200 Peachtree Street, N.E., Atlanta, Georgia 30309, on behalf of itself, its successors and assigns, (individually and collectively "AT&T"), and BellSouth Telecommunications, Inc. ("BellSouth"), a Georgia corporation, on behalf of itself, its successors and assigns, having an office at 675 West Peachtree Street, Atlanta, Georgia 30375.

RECITALS

WHEREAS, The Telecommunications Act of 1996 (the "Act") was signed into law on February 8, 1996; and

WHEREAS, the Act places certain duties and obligations upon, and grants certain rights to Telecommunications Carriers; and

WHEREAS, BellSouth is an Incumbent Local Exchange Carrier; and

WHEREAS, BellSouth is willing to provide Telecommunications Services for resale, Interconnection, Unbundled Network Elements and Ancillary Functions which include, but are not limited to, access to poles, ducts, conduits and rights-of-way, and collocation of equipment at BellSouth's Premises on the terms and subject to the conditions of this Agreement; and

WHEREAS, AT&T is a Telecommunications Carrier and has requested that BellSouth negotiate an Agreement with AT&T for the provision of Interconnection, Unbundled Network Elements, and Ancillary Functions as well as Telecommunications Services for resale, pursuant to the Act and in conformance with BellSouth's duties under the Act,

NOW, THEREFORE, in consideration of the promises and the mutual covenants of this Agreement, AT&T and BellSouth hereby agree as follows:

DEFINITIONS and ACRONYMS

For purposes of this Agreement, certain terms have been defined in Attachment 11 and elsewhere in this Agreement to encompass meanings that may differ from, or be in addition to, the normal connotation of the defined word. Unless the context clearly indicates otherwise, any term defined or used in the singular shall include the plural. The words "shall" and "will" are used interchangeably throughout this Agreement and the use of either connotes a mandatory requirement. The use of one or the other shall not mean a different degree of right or obligation for either Party. A defined word intended to convey its special meaning is capitalized when used. Other terms that are capitalized, and not defined in this Agreement, shall have the meaning in the Act. For convenience of reference, Attachment 10 provides a list of acronyms used throughout this Agreement.

GENERAL TERMS AND CONDITIONS

1. **Provision of Local Service and Unbundled Network Elements**

This Agreement sets forth the terms, conditions and prices under which BellSouth agrees to provide (a) Telecommunications Service that BellSouth currently provides, or may offer hereafter for resale along with the Support Functions and Service Functions set forth in this Agreement (hereinafter collectively referred to as "Local Services") and (b) certain unbundled Network Elements, or combinations of such Network Elements ("Combinations") and (c) Ancillary Functions to AT&T (Local Services, Network Elements, Combinations, and Ancillary Functions, collectively referred to as "Services and Elements"). This Agreement also sets forth the terms and conditions for the interconnection of AT&T's network to BellSouth's network and the mutual and reciprocal compensation for the transport and termination of telecommunications. BellSouth may fulfill the requirements imposed upon it by this Agreement by itself or, in the case of directory listings for white pages may cause BellSouth Advertising and Publishing Company ("BAPCO") to take such actions to fulfill BellSouth's responsibilities. This Agreement includes Parts I through IV, and their Attachments 1 - 15 and all accompanying Appendices and Exhibits. Unless otherwise provided in this Agreement, BellSouth will perform all of its obligations hereunder throughout its entire service area. The Parties further agree to comply with all provisions of the Act, including Section 271(e) (1).

1.A The Services and Elements provided pursuant to this Agreement may be connected to other Services and Elements provided by BellSouth or to any Services and Elements provided by AT&T itself or by any other vendor. AT&T may purchase unbundled Network Elements for the purpose of combining Network Elements in any manner that is technically feasible, including recreating existing BellSouth services.

1.1 Subject to the requirements of this Agreement, AT&T may, at any time add, relocate or modify any Services and Elements purchased hereunder. Requests for additions or other changes shall be handled pursuant to the Bona Fide Request Process provided in Attachment 14. Terminations of any Services or Elements shall be handled pursuant to Section 3.1 of the General Terms and Conditions of this Agreement.

1.2 BellSouth shall not discontinue any Network Element, Ancillary Function, or Combination provided hereunder without the prior written consent of AT&T. Such consent shall not be unreasonably withheld. BellSouth shall not discontinue any Local Service provided hereunder unless BellSouth provides AT&T prior written notice of intent to discontinue any such service. BellSouth agrees to make any such service available to AT&T for resale to AT&T's Customers who are subscribers of such services from AT&T until the date BellSouth discontinues any such service for BellSouth's customers. BellSouth also agrees to adopt a reasonable, nondiscriminatory transition schedule for BellSouth or AT&T Customers who may be purchasing any such service.

1.3 This Agreement may be amended from time to time as mutually agreed in writing between the Parties. The Parties agree that neither Party will take any action to proceed, nor shall either have any obligation to proceed on a requested change unless and until a modification to this Agreement is signed by authorized representatives of each Party.

2. <u>Term of Agreement</u>

2.1 When executed by authorized representatives of BellSouth and AT&T, this Agreement shall become effective as of the Effective Date stated above, and shall expire three (3) years from the Effective Date unless terminated in accordance with the provisions of Section 3.2 of the General Terms and Conditions.

2.2 No later than one hundred and eighty (180) days prior to the expiration of this Agreement, the Parties agree to commence negotiations with regard to the terms, conditions, and prices of a follow-on agreement for the provision of Services and Elements to be effective on or before the expiration date of this Agreement ("Follow-on Agreement"). The Parties further agree that any

such Follow-on Agreement shall be for a term of no less than three (3) years unless the Parties agree otherwise.

2.3 If, within one hundred and thirty-five (135) days of commencing the negotiation referenced to Section 2.2, above, the Parties are unable to satisfactorily negotiate new terms, conditions and prices, either Party may petition the Commission to establish an appropriate Follow-on Agreement pursuant to 47 U.S.C. § 252. The Parties agree that in such event they shall encourage the Commission to issue its order regarding such Follow-on Agreement no later than the expiration date of this Agreement. The Parties further agree that in the event the Commission does not issue its order by the expiration date of this Agreement, or if the Parties continue beyond the expiration date of this Agreement to negotiate without Commission intervention, the terms, conditions and prices ultimately ordered by the Commission, or negotiated by the Parties, will be effective, retroactive to the day following the expiration date of this Agreement . Until the Follow-on Agreement becomes effective, BellSouth shall provide Services and Elements pursuant to the terms, conditions and prices of this Agreement that are then in effect. Prior to filing a Petition pursuant to this Section 2.3, the Parties agree to utilize the informal dispute resolution process provided in Section 3 of Attachment 1.

3. **Termination of Agreement; Transitional Support**

3.1 AT&T may terminate any Local Service(s), Network Element(s), Combination(s), or Ancillary Function(s) provided under this Agreement upon thirty (30) days written notice to BellSouth unless a different notice period or different conditions are specified for termination of such Local Services(s), Network Element(s), or Combination(s) in this Agreement or pursuant to any applicable tariff, in which event such specific period or conditions shall apply, provided such period or condition is reasonable, nondiscriminatory and narrowly tailored. Where there is no such different notice period or different condition specified, AT&T's liability shall be limited to payment of the amounts due for any terminated Local Service(s), Network Element(s), Combination(s) or Ancillary Service provided up to and including the date of termination. Notwithstanding the foregoing, the provisions of section 10, infra, shall still apply. Upon termination, BellSouth agrees to cooperate in an orderly and efficient transition to AT&T or another vendor such that the level and quality of the Services and Elements is not degraded and to exercise its best efforts to effect an orderly and efficient transition. AT&T agrees that it may not terminate the entire Agreement pursuant to this section.

3.2 If a Party is in breach of a material term or condition of this Agreement ("Defaulting Party"), the other Party shall provide written notice of such breach to the Defaulting Party. The Defaulting Party shall have ten (10) business days from receipt of notice to cure the breach. If the breach is not cured, the Parties shall follow the dispute resolution procedure of Section 16 of the General Terms and Conditions and Attachment 1. If the Arbitrator determines that a breach has occurred and the Defaulting Party fails to comply with the decision of the Arbitrator within the time period provided by the Arbitrator (or a period of thirty (30) days if no time period is provided for in the Arbitrator's order), this Agreement may be terminated in whole or part by the other Party upon sixty (60) days prior written notice.

4. **Good Faith Performance**

In the performance of their obligations under this Agreement, the Parties shall act in good faith and consistently with the intent of the Act. Where notice, approval or similar action by a Party is permitted or required by any provision of this Agreement, (including, without limitation, the obligation of the Parties to further negotiate the resolution of new or open issues under this Agreement) such action shall not be unreasonably delayed, withheld or conditioned.

Option to Obtain Local Services, Network Elements and Combinations Under Other Agreements

AGREEMENT

PREFACE

This Agreement, which shall become effective as of the 26th day of October 26, 2001, is entered into by and between AT&T Communications of the Southern States, Inc., a New York corporation, having an office at 1200 Peachtree Street, N.E., Atlanta, Georgia, 30309, on behalf of itself and its Affiliates (individually and collectively "AT&T"), and BellSouth Telecommunications, Inc. ("BellSouth"), a Georgia corporation, having an office at 675 West Peachtree Street, Atlanta, Georgia 30375, on behalf of itself and its successors and assigns.

RECITALS

WHEREAS, The Telecommunications Act of 1996 (the "Act") was signed into law on February 8, 1996; and

WHEREAS, the Act places certain duties and obligations upon, and grants certain rights to Telecommunications Carriers; and

WHEREAS, BellSouth is an Incumbent Local Exchange Carrier; and

WHEREAS, AT&T is a Telecommunications Carrier and has requested that BellSouth negotiate an Agreement pursuant to the Act,

NOW, THEREFORE, in consideration of the promises and the mutual covenants of this Agreement, AT&T and BellSouth hereby agree as follows:

DEFINITIONS and ACRONYMS

For purposes of this Agreement, certain terms have been defined in the body of the Agreement to encompass meanings that may differ from, or be in addition to, the normal connotation of the defined word. Unless the context clearly indicates otherwise, any term defined or used in the singular shall include the plural. The words "shall" and "will" are used interchangeably throughout this Agreement and the use of either connotes a mandatory requirement. The use of one or the other shall not mean a different degree of right or obligation for either Party. A defined word intended to convey its special meaning is capitalized when used. Other terms that are capitalized, and not defined in this Agreement, shall have the meaning in the Act. For convenience of reference, Attachment 11 provides a list of acronyms used throughout this Agreement.

18. Confidentiality and Proprietary Information 25

19. Branding 27

20. Directory Listings Requirements 28

21. Insurance Requirements 30

22. Costs 30

23. Disaster Recovery 30

24. Miscellaneous 31

25. Reservation of Rights 35

ATTACHMENTS

Attachment 1	Resale
Attachment 2	Unbundled Network Elements
Attachment 3	Local Interconnection
Attachment 4	Collocation
Attachment 5	Access to Numbers and Number Portability
Attachment 6	Connectivity Billing and Recording
Attachment 7	Interface Requirements for Ordering and Provisioning, Maintenance and Repair, and Pre-Ordering
Attachment 8	Rights of Way (ROW), Conduits, and Pole Attachments
Attachment 9	Performance Measures
Attachment 10	Bona Fide Request/New Business Request Process
Attachment 11	Acronyms
Attachment 12	Network Security
Attachment 13	BAPCO Agreement
Exhibit A	Disaster Recovery

TABLE OF CONTENTS

Section **Page**

AGREEMENT 4

PREFACE 4

RECITALS 4

DEFINITIONS and ACRONYMS 4

GENERAL TERMS AND CONDITIONS 5

1. **Provision of Local Service and Unbundled Network Elements** 5
2. **Term of Agreement** 6
3. **Termination of Agreement; Transitional Support** 6
4. **Good Faith Performance** 7
5. **Option to Obtain Services and Elements and Combinations Under Other Agreements** 7
6. **Responsibility of Each Party** 8
7. **Governmental Compliance** 8
8. **Responsibility For Environmental Contamination** 9
9. **Regulatory Matters** 11
10. **Liability and Indemnity** 12
11. **Intellectual Property Rights and Indemnification** 14
12. **Audits and Inspections** 17
13. **Performance Measurement** 19
14. **Force Majeure** 19
15. **Certain Federal, State and Local Taxes** 20
16. **Dispute Resolution Process** 24
17. **Notices** 24

AGREEMENT

between

BellSouth Telecommunications, Inc.

and

AT&T Communications of the Southern States, Inc.

FLORIDA

4.14 Interference or Impairment

4.14.1 Within three (3) business days of receipt of notification of blocking of traffic originated within the other Party's network, the Parties shall determine and begin work to implement reasonable corrective measures in a manner consistent with industry practices.

4.15 Local Dialing Parity

4.15.1 BellSouth and AT&T shall provide local and toll dialing parity to each other with no unreasonable dialing delays. Dialing parity shall be provided for all originating telecommunications services that require dialing to route a call. BellSouth and AT&T shall permit similarly situated telephone exchange service end users to dial the same number of digits to make a local telephone call notwithstanding the identity of the end user's or the called party's telecommunications service provider.

5. NETWORK MAINTENANCE

5.1 Outage Repair Standard

5.1.1 In the event of an outage or trouble in any arrangement, facility, or service being provided by BellSouth hereunder, BellSouth will follow procedures for isolating and clearing the outage or trouble that are no less favorable than those that apply to comparable arrangements, facilities, or services being provided by BellSouth to itself, Affiliate or any other carrier whose network is connected to that of BellSouth.

5.2 BellSouth will use best efforts to provide AT&T with at least thirty (30) days advance, written notice of scheduled maintenance activity. BellSouth may expedite or delay scheduled maintenance as a result of unscheduled maintenance or other unforeseen events. In those instances where BellSouth will not perform scheduled maintenance at the announced times, BellSouth will provide AT&T with as much notice as is reasonably possible concerning the changed schedule. For major, long term scheduled events, (i.e., switch software/processor updates or software upgrades/new releases to the Sonet transport network elements) BellSouth shall provide AT&T with as much advance, written notice as possible.

5.3 Interconnection Compensation

5.3.1 Compensation for Local Traffic

5.3.1.1 For the treatment of local and ISP-bound traffic in this Agreement, the Parties agree to implement the FCC's Order on Remand and Report

and Order in CC Docket No. 96-98 and 99-68 released April 27, 2001 ("ISP Order on Remand"). The Parties further agree to amend this agreement, within sixty (60) days of execution, to incorporate language reflecting the FCC ISP Order on Remand. At such time as that amendment is finalized, the Parties agree to work cooperatively to "true-up" compensation amounts consistent with the terms of the amended language from the effective date of the FCC ISP Order on Remand to the date the amendment is finalized. In this Section, the Parties express their intent to file negotiated language to incorporate the FCC's ISP Order on Remand. If the Parties are unable to agree on this language addressing this issue by the time the language is due to be filed, either party may petition the Florida Public Service Commission to resolve the dispute between the Parties as to the appropriate language addressing this issue. Additionally, the Parties agree to apply a "LATAwide" local concept to this Attachment 3, meaning that traffic that has traditionally been treated as intraLATA toll traffic will now be treated as local for intercarrier compensation purposes, except for those calls that are originated or terminated through switched access arrangements as established by the State Commission or FCC.

5.3.1.2 The Parties recognize and agree that the compensation for the transport and termination of Local Traffic is intended to allow each Party to recover costs associated with such traffic. The Parties recognize and agree that such compensation will not be billed and shall not be paid for calls where a Party sets up a call, or colludes with a third party to set up a call, to the other Party's network for the purpose of receiving reciprocal compensation, and not for the purposes of providing a telecommunications service to an end user.

5.3.2 The Parties shall provide for the mutual and reciprocal recovery of the costs for the network facilities utilized in transporting and terminating local traffic on each other's network. The Parties agree that charges for transport and termination of calls on their respective networks are as set forth in Exhibit A to this Attachment.

5.3.2.1 For the purposes of this Attachment 3, Common (Shared) Transport is defined as the transport of one Party's traffic by the other Party over the other Party's common (shared) facilities between the other Party's tandem switch and end office switch and/or between the other Party's tandem switches.

5.3.2.2 For the purposes of this Attachment 3, Tandem Switching is defined as the function that establishes a communications path between two switching offices through a third switching office (the Tandem switch).

5.3.2.3 For the purposes of this Attachment 3, End Office Switching is defined as the function that establishes a communications path between the trunk side and line side of the End Office switch.

5.3.2.4 In the event that AT&T elects to offer service within a LATA using a switch located in another LATA, AT&T agrees to provide the transport for both Parties' traffic between the remote AT&T switch and a point (i.e., a facility point of presence) within the LATA in which AT&T offers service. Such facility point of presence shall be deemed to be an AT&T switch for the purposes of this Attachment.

5.3.3 Switched Access Traffic. Switched Access Traffic is defined as telephone calls requiring local transmission or switching services for the purpose of the origination or termination of Intrastate InterLATA and Interstate InterLATA traffic. Switched Access Traffic includes, but is not limited to, the following types of traffic: Feature Group A, Feature Group B, Feature Group D, toll free access (e.g., 800/877/888), 900 access, and their successors. Additionally, If BellSouth or AT&T is the other Party's end user's presubscribed interexchange carrier or if an end user uses BellSouth or AT&T as an interexchange carrier on a 101XXXX basis, BellSouth or AT&T will charge the other Party the appropriate tariff charges for originating switched access services. The Parties have been unable to agree as to whether Voice over Internet Protocol ("VOIP") transmissions which cross local calling area boundaries constitute Switched Access Traffic. Notwithstanding the foregoing, and without waiving any rights with respect to either Party's position as to the jurisdictional nature of VOIP, the Parties agree to abide by any effective and applicable FCC rules and orders regarding the nature of such traffic and the compensation payable by the Parties for such traffic, if any; provided however, that any VOIP transmission which originates in one LATA and terminates in another LATA (i.e., the end-to-end points of the call), shall not be compensated as Local Traffic. This Section is interrelated to Section 5.3.1.1.

5.3.4 The Parties have been unable to agree as to the appropriate compensation for calls which originate in a LATA and terminate to a physical location outside of that LATA but to a number assigned to a rate center within that LATA. However, without prejudice to either Party's position concerning the application of reciprocal compensation or access charges to such traffic, the Parties agree for purposes of this Agreement only and subject to the Parties' agreement to the terms of Sections 5.3.1.1 and 5.3.3, and on an interim basis until the FCC issues an Order addressing this issue, neither Party shall bill the other reciprocal compensation, intercarrier compensation or switched access in connection with the exchange of any traffic as described in

FIRST AMENDMENT
TO THE
INTERCONNECTION AGREEMENT BETWEEN
AT&T COMMUNICATIONS OF THE SOUTHERN STATES, INC.
AND
BELLSOUTH TELECOMMUNICATIONS, INC.
FOR THE STATE OF FLORIDA
DATED OCTOBER 26, 2001

Pursuant to this Agreement, ("Amendment") AT&T Communications of the Southern States, Inc. ("AT&T") and BellSouth Telecommunications, Inc. ("BellSouth"), hereinafter referred to collectively as the "Parties," hereby agree to amend that certain Interconnection Agreement between the Parties dated October 26, 2001 ("Interconnection Agreement").

NOW THEREFORE, in consideration of the mutual provisions contained herein and other good and valuable consideration, the receipt and sufficiency of which are hereby acknowledged, the Parties hereby covenant and agree as follows:

Pursuant to this Amendment, the Parties hereby agree to amend the Interconnection Agreement to reflect the following:

1. The Parties agree to delete Section 5.3 of Attachment 3 in its entirety and replace it with the provisions set forth in Exhibit 1 of this Amendment, attached hereto and incorporated herein by this reference.

2. The Parties agree to delete Exhibit A of Attachment 3 in its entirety and replace it with a new Exhibit A, set forth in Exhibit 2 of this Amendment, attached hereto and incorporated herein by this reference.

3. The Parties agree to delete Section 3.7.4 of Attachment 2 in its entirety and replace it with the following provision:

   3.7.4 AT&T or BellSouth ("Petitioner") shall notify the other Party ("Respondent") in writing via AT&T's Local Services and Access Management ("LSAM") Group or BellSouth's AT&T Account Team ("Account Team") of the needed areas of improvement and any proposed changes to the current hot cut process provided for in the Interconnection Agreement ("Agreement").

3.7.4.1 The Respondent shall submit a written response to Petitioner within fifteen (15) calendar days of the requested change.

3.7.4.2 Upon receipt of the response, Petitioner shall either:

3.7.4.2.1 schedule a meeting between representatives of each party with authority to identify areas of improvement and, if applicable, to develop and implement process changes resulting from such mutual cooperation; or

3.7.4.2.2 accept all proposed changes by Respondent, if any, and notify Respondent with a written response within seven (7) calendar days that the changes, if any, will be accepted.

3.7.4.3 If Section 3.7.4.2.1 is implemented, the Parties agree to negotiate the requested change in good faith within ninety (90) calendar days of the day Petitioner requested the proposed change.

3.7.4.4 A mutually agreed upon process under either Section 3.7.4.2.1 or Section 3.7.4.2.2 shall be implemented upon a mutually agreed upon timeframe.

3.7.4.5 Should the Parties be unable to agree on a mutually acceptable change to the process and or an agreeable date to implement such change within one hundred and twenty (120) days of the day Petitioner requested the proposed change, the Parties agree to resolve any disputes in accordance with the dispute resolution process provided in Section 16 of the General Terms and Conditions of this Agreement.

3.7.4.6 At no such time, shall either Party waive any rights that it may have with respect to the Agreement in its entirety.

3.7.4.7 Nothing in this Process Improvement Plan is deemed to amend or modify any other terms in the Interconnection Agreement.

4. The Parties agree to add provisions consistent with the FCC's 4th Report and Order, dated August 8, 2000, to delete Attachment 4 –Collocation and replace in its entirety with a new Attachment 4 –Collocation, attached hereto as Exhibit 3 and incorporated herein by reference. Except as otherwise set forth herein, the original Exhibits to Attachment 4 are unaffected by this Amendment and shall remain in full force and effect.

5. The Parties further agree to make the following revisions to Attachment 4-Collocation Rates Exhibit B, attached herein as Exhibit 4:

   A. Delete the Co-Carrier cross connect rates and replace it with the rates set forth in Exhibit 4 to this Amendment, attached hereto and incorporated herein by reference.

   B. Delete the USOC description and abbreviation of PE1PL for -48V DC power and replace with the new USOC description and abbreviation of PE1FJ for the –48V DC power as set forth in Exhibit 4 to this Amendment, attached hereto and incorporated herein by reference.

   C. Delete the USOC description and abbreviation of XXXX for -48V DC power and replace with the new USOC description and abbreviation of PE1PL for the –48V DC power as set forth in Exhibit 4 to this Amendment, attached hereto and incorporated herein by reference.

6. AT&T has changed the name of said business to AT&T Communications of the Southern States, LLC.

7. The Parties agree the name of AT&T Communications of the Southern States, Inc. is hereby deleted throughout the Interconnection Agreement and replace it with AT&T Communications of the Southern States, LLC ("AT&T").

8. All of the other provisions of the Interconnection Agreement, dated October 26, 2001, shall remain in full force and effect.

9. Either or both of the Parties is authorized to submit this Amendment to the respective Public Service Commission for approval subject to Section 252(e) of the Federal Telecommunications Act of 1996.

IN WITNESS WHEREOF, the Parties hereto have caused this Amendment to be executed by their respective duly authorized representatives on the date indicated below.

AT&T Communications of the Southern States, Inc.

By: Bill C. Peacock

Name: Bill C. Peacock

Title: Director - Local Services & Access Management

Date: 4-18-02

BellSouth Telecommunications, Inc.

By:

Name: Jerry Hendrix

Title: AVP Interconnection Scs. Mktg.

Date: 4/18/02

Exhibit 1

5.3 **Interconnection Compensation**

5.3.1 **Intercarrier Compensation for Call Transport and Termination of Local and ISP-bound Traffic**

5.3.1.1 The Parties agree to apply a "LATAwide" local concept to this Attachment 3, meaning that traffic that has traditionally been treated as intraLATA toll traffic will now be treated as local for intercarrier compensation purposes, except for those calls that are originated or terminated through switched access arrangements as established by the State Commission or FCC. Nothing in this Agreement shall be construed in any way to constrain either Party's choices regarding the size of the local calling areas that it may establish for its end users.

5.3.1.2 The Parties recognize and agree that the compensation for the transport and termination of Local Traffic is intended to allow each Party to recover costs associated with such traffic. The Parties recognize and agree that such compensation will not be billed and shall not be paid for calls where a Party sets up a call, or colludes with a third party to set up a call, to the other Party's network for the purpose of receiving reciprocal compensation, and not for the purposes of providing a telecommunications service to an end user.

5.3.2 ISP-bound Traffic is defined as calls to an information service provider or Internet service provider ("ISP") that are dialed by using a local dialing pattern (7 or 10 digits) by a calling party in one LATA to an ISP server or modem in the same LATA and is a subset of "information access". Information access is defined as the provision of specialized exchange telecommunications services in connection with the origination, termination, transmission, switching, forwarding or routing of telecommunications traffic to or from the facilities of a provider of information services. ISP-bound Traffic is not Local Traffic or IP Telephony as set forth in 5.3.10 of this agreement, subject to reciprocal compensation, but instead is information access traffic subject to the FCC's jurisdiction. Notwithstanding the definitions of Local Traffic and ISP-bound traffic above, and pursuant to the FCC's Order on Remand and Report and Order in CC Docket 99-68 released April 27, 2001 ("ISP Order on Remand"), BellSouth and AT&T agree to the rebuttable presumption that all combined circuit switched Local and ISP-bound Traffic delivered to BellSouth or AT&T that exceeds a 3:1 ratio of terminating to originating traffic on a statewide basis shall be considered ISP-bound traffic for compensation purposes. BellSouth and AT&T further agree to the rebuttable presumption that all combined circuit switched Local and ISP-bound Traffic delivered to BellSouth or AT&T that does not exceed a 3:1 ratio of terminating to originating traffic on a statewide basis shall be considered Local Traffic for compensation purposes.

Exhibit 1

5.3.3 All Local and ISP Traffic that is exchanged pursuant to this Agreement shall be compensated as follows:

5.3.3.1 Commencing on July 1, 2001 and continuing until December 31, 2001, $.0015 per minute of use.

5.3.3.2 Commencing on January 1, 2002 and continuing until June 30, 2003, $.0010 per minute of use.

5.3.3.3 Commencing on July 1, 2003 and continuing until June 30, 2004, or until further FCC action (whichever is later), $.0007 per minute of use.

5.3.3.4 No other per MOU charges shall apply to the carriage of Local and ISP Traffic by either Party for the other Party except as set forth above. Compensation for Transit Traffic shall be as set forth in Section 5.3.20.

Exhibit 1

5.3.4 The ability of either Party to collect a credit for intercarrier compensation paid for ISP Traffic, as described in section 5.3.5, following, shall be limited as follows based on "growth caps" on compensation for ISP Traffic ordered by the FCC. The Parties shall first determine the total number of minutes of use of ISP Traffic (as defined in this Agreement) terminated by one Party for the other Party for the three-month period commencing January 1, 2001 and ending March 31, 2001. The Parties shall then multiply this number of minutes by 4.4, and the resulting product shall be the terminating Party's "2001 ISP Annualized Traffic Cap." The total number of minutes of use of ISP Traffic for which one Party may receive compensation from the other Party during the period July 1, 2001 through December 31, 2001 shall equal 50% of that Party's 2001 ISP annualized traffic cap, due to the Parties' mid-year one-time compensation payment. The total number of minutes of use of ISP Traffic for which one Party may receive compensation from the other Party during the period January 1, 2002 through December 31, 2002 or for any calendar year thereafter shall equal 1.1 times that Party's 2001 ISP Annualized Traffic Cap.

5.3.5 For the period commencing July 1, 2001, each party will bill the other for all minutes of use specified in 5.3.3, above. The parties will meet in February 2002 on a trial basis to determine if annual meetings are sufficient for determining the number of ISP-bound minutes. If such trial proves successful, the parties will meet each succeeding February, thereafter, for the duration of this Agreement to determine the number of ISP-bound minutes and there will be no need to amend this Agreement. If the trial proves unsuccessful, no later than June 2002, the parties will develop a subsequent process and amend this Agreement Intercarrier Compensation paid for any ISP-bound minutes of use that exceeds the caps described in 5.3.4, above, will be credited to that party in the March bill. At this same meeting, the Parties will reach agreement on the ISP-bound minutes of use cap for the next time period.

5.3.6 For the purposes of this Attachment 3, Common (Shared) Transport is defined as the transport of one Party's traffic by the other Party over the other Party's common (shared) facilities between the other Party's tandem switch and end office switch and/or between the other Party's tandem switches.

5.3.7 For the purposes of this Attachment 3, Tandem Switching is defined as the function that establishes a communications path between two switching offices through a third switching office (the Tandem switch).

5.3.8 For the purposes of this Attachment 3, End Office Switching is defined as the function that establishes a communications path between the trunk side and line side of the End Office switch.

5.3.9 In the event that AT&T elects to offer service within a LATA using a switch located in another LATA, AT&T agrees to provide the transport for

Exhibit 1

both Parties' traffic between the remote AT&T switch and a point (i.e., a facility point of presence) within the LATA in which AT&T offers service. Such facility point of presence shall be deemed to be an AT&T switch for the purposes of this Attachment.

5.3.10 Switched Access Traffic. Switched Access Traffic is defined as telephone calls requiring local transmission or switching services for the purpose of the origination or termination of Intrastate InterLATA and Interstate InterLATA traffic. Switched Access Traffic includes, but is not limited to, the following types of traffic: Feature Group A, Feature Group B, Feature Group D, toll free access (e.g., 800/877/888), 900 access, and their successors. Additionally, If BellSouth or AT&T is the other Party's end user's presubscribed interexchange carrier or if an end user uses BellSouth or AT&T as an interexchange carrier on a 101XXXX basis, BellSouth or AT&T will charge the other Party the appropriate tariff charges for originating switched access services. The Parties have been unable to agree as to whether Voice over Internet Protocol ("VOIP") transmissions which cross local calling area boundaries constitute Switched Access Traffic. Notwithstanding the foregoing, and without waiving any rights with respect to either Party's position as to the jurisdictional nature of VOIP, the Parties agree to abide by any effective and applicable FCC rules and orders regarding the nature of such traffic and the compensation payable by the Parties for such traffic, if any; provided however, that any VOIP transmission which originates in one LATA and terminates in another LATA (i.e., the end-to-end points of the call), shall not be compensated as Local Traffic. This Section is interrelated to Section 5.3.1.1.

5.3.11 The Parties have been unable to agree as to the appropriate compensation for calls which originate in a LATA and terminate to a physical location outside of that LATA but to a number assigned to a rate center within that LATA. However, without prejudice to either Party's position concerning the application of reciprocal compensation or access charges to such traffic, the Parties agree for purposes of this Agreement only and subject to the Parties' agreement to the terms of Sections 5.3.1.1 and 5.3.3, and on an interim basis until the FCC issues an Order addressing this issue, neither Party shall bill the other reciprocal compensation, intercarrier compensation or switched access in connection with the exchange of any traffic as described in the first sentence of this paragraph. Once the FCC issues an Effective Order addressing this issue, the Parties agree to amend this Interconnection Agreement to comply with the Order on a prospective basis only within thirty (30) days of either Party's written request. No "true-up" shall be required in connection with such an Effective Order. Nothing in this Section 5.3.4 is intended to change the way that the Parties treat ISP-bound traffic in accordance with the FCC's ISP Order on Remand.

Exhibit 1

5.3.12 Billing Point of Interface Compensation. If BellSouth establishes a BPOI, AT&T agrees to pay to BellSouth Interoffice Dedicated Transport and any associated Multiplexing for BellSouth to transport BellSouth's originated Local and ISP-bound Traffic over BellSouth facilities from the BPOI as described in Section 1.8.3 of this Attachment to the Physical Point of Interface. Such Interoffice Dedicated Transport shall be priced as set forth in Exhibit A. The Interoffice Dedicated Transport mileage shall be the airline mileage between the Vertical and Horizontal ("V&H") coordinates of the BPOI and the V&H coordinates of the BellSouth Point of Interface. The Interoffice Dedicated Transport charges for BPOI shall be billed based on the actual volume of traffic in increments of 8.9M minutes, which is a DS3 equivalent. BellSouth will not assess charges for an additional DS3 until the additional 8.9M-minute threshold is met.

5.3.13 Charges for Trunks and Associated Dedicated Facilities. Compensation for trunks and associated dedicated facilities shall be handled in accordance with Section 1.9-1.9.2 of this Attachment.

5.3.14 Percent Local Use. Each Party will report to the other a Percentage Local Usage ("PLU"). The application of the PLU will determine the amount of local minutes to be billed to the other Party. For purposes of developing the PLU, each Party shall consider every local call and every long distance call, excluding intermediary traffic. BellSouth shall report quarterly PLU factors to AT&T. BellSouth will accept from AT&T monthly PLU factors provided under the previous agreement until the third quarter of 2001, at which time AT&T shall report quarterly PLU factors. BellSouth and AT&T shall also provide a positive report updating the PLU. Detailed requirements associated with PLU reporting shall be as set forth in BellSouth's Standard Percent Local Use Reporting Platform for Interconnection Purchasers, as it is amended from time to time during this Agreement. Notwithstanding the foregoing, where the terminating company has message recording technology that identifies the traffic terminated, such information, in lieu of the PLU factor, shall at the company's option be utilized to determine the appropriate reciprocal compensation to be paid.

5.3.15 Percent Local Facility. Each Party shall report to the other a PLF. The application of the PLF will determine the portion of switched dedicated transport to be billed per the local jurisdiction rates. The PLF shall be applied to multiplexing, local channel and interoffice channel switched dedicated transport utilized in the provision of local interconnection trunks. Each Party shall update its PLF on the first of January, April, July and October of the year and shall send it to the other Party to be received no later than thirty (30) calendar days after the first of each such month to be effective the first bill period the following month, respectively. Requirements associated with PLU and PLF calculation and reporting shall be as set forth in BellSouth's Percent Local Use/Percent Local Facility Reporting Guidebook, as it is amended from time to time.

Exhibit 1

5.3.16 Percentage Interstate Usage. For combined interstate and intrastate AT&T traffic terminated by BellSouth over the same facilities, AT&T will be required to provide a projected Percentage Interstate Usage ("PIU") to BellSouth. All jurisdictional report requirements, rules and regulations for Interexchange Carriers specified in BellSouth's Intrastate Access Services Tariff will apply to AT&T. After interstate and intrastate traffic percentages have been determined by use of PIU procedures, the PLU factor will be used for application and billing of local interconnection. Notwithstanding the foregoing, where the terminating company has message recording technology that identifies the traffic terminated, such information, in lieu of the PLU factor, shall at the company's option be utilized to determine the appropriate reciprocal compensation to be paid.

5.3.17 Audits. On thirty (30) days' written notice, each Party must provide the other the ability and opportunity to conduct an annual audit of the traffic reported. BellSouth and AT&T shall retain records of call detail for a minimum of nine months from which a PLU and/or PIU can be ascertained. The audit shall be accomplished during normal business hours at an office designated by the Party being audited. Audit requests shall not be submitted more frequently than one (1) time per calendar year. Audits shall be performed by a mutually acceptable independent auditor paid for by the Party requesting the audit. The PLU and/or PIU shall be adjusted based upon the audit results and shall apply to the usage for the quarter the audit was completed, to the usage for the quarter prior to the completion of the audit, and to the usage for the two quarters following the completion of the audit. If, as a result of an audit, either Party is found to have overstated the PLU and/or PIU by twenty percentage points (20%) or more, that Party shall reimburse the auditing Party for the cost of the audit.

5.3.18 Compensation for 800 Traffic. Each Party shall compensate the other pursuant to the appropriate switched access charges, including the database query charge as set forth in the each Party's intrastate or interstate switched access tariffs.

5.3.19 Records for 8YY Billing. Each Party will provide to the other the appropriate records necessary for billing intraLATA 8YY customers. Records required for billing end users purchasing 8YY Services shall be provided pursuant to Attachment 6 of this Agreement, incorporated herein by this reference.

5.3.20 Transit Traffic Service. BellSouth shall provide tandem switching and transport services for AT&T's transit traffic. Transit traffic is traffic originating on AT&T's network that is switched and/or transported by BellSouth and delivered to a third party's network, or traffic originating on a third Party's network that is switched and/or transported by BellSouth and delivered to AT&T's network. Transit traffic consists of local transit traffic and Switched Access transit traffic. Rates for local transit traffic

Exhibit 1

shall be the applicable call transport and termination charges as set forth in Exhibit A to this Attachment. Switched Access transit traffic shall be meet-point billed in accordance with the BellSouth Interstate or Intrastate Switched Access tariffs. Switched Access transit traffic presumes that AT&T's end office is subtending the BellSouth Access Tandem for switched access traffic to and from AT&T's end users utilizing BellSouth facilities, either by direct trunks with the IXC, or via the BellSouth Access Tandem. Billing associated with all transit traffic shall be pursuant to MECAB procedures. Wireless Type 1 traffic shall not be treated as transit traffic from a routing or billing perspective. Wireless Type 2A traffic shall not be treated as transit traffic from a routing or billing perspective until BellSouth and the Wireless carrier have the capability to properly meet-point-bill in accordance with Multiple Exchange Carrier Access Billing ("MECAB") guidelines. Transit traffic does not include traffic originating from or terminating to AT&T end-users utilizing resold BellSouth services.

BellSouth agrees to implement control mechanisms and procedures to render a bill that accurately reflects the Billed Services ordered and used by AT&T. Accordingly, at AT&T's option on a connectivity by connectivity basis, AT&T and BellSouth agree to model, for the purposes of this Agreement, the process and methodology for access certification set forth in the Access Billing Supplier Quality Certification Operating Agreement dated August 13, 1993, executed by AT&T and BellSouth which governs certification of access bills for interLATA and intraLATA calls. At the point AT&T and BellSouth mutually agree that pre-certification is complete, all billing disputes will be handled pursuant to a billing supplier quality certification operating agreement to be executed by the Parties.

1.14 Payment Of Charges

1.14.1 Subject to the terms of this Agreement, AT&T and BellSouth will pay each other within thirty (30) calendar days from the Bill Date, or twenty (20) calendar days from the receipt of the bill, whichever is later. If the payment due date is a Sunday or is a Monday that has been designated a bank holiday by the Chase Manhattan Bank of New York (or such other bank as AT&T specifies), payment will be made the next business day. If the payment due date is a Saturday or is on a Tuesday, Wednesday, Thursday or Friday that has been designated a bank holiday by the Chase Manhattan Bank of New York (or such other bank as AT&T specifies), payment will be made on the preceding business day.

1.14.2 Payments shall be made in U.S. Dollars via electronic funds transfer ("EFT") to the other Party's bank account. At least thirty (30) days prior to the first transmission of billing data and information for payment, BellSouth and AT&T shall provide each other the name and address of its bank, its account and routing number and to whom billing payments should be made payable. If such banking information changes, each Party shall provide the other Party at least sixty (60) days written notice of the change and such notice shall include the new banking information. The Parties will render payment via EFT. AT&T will provide BellSouth with one address to which such payments shall be rendered and BellSouth will provide AT&T with one address to which such payments shall be rendered. In the event AT&T receives multiple bills from BellSouth which are payable on the same date, AT&T may remit one payment for the sum of all bills payable to BellSouth's bank account specified in this subsection if AT&T provides payment advice to BellSouth. Each Party shall provide the other Party with a contact person for the handling of billing payment questions or problems.

1.15 Billing Disputes

1.15.1 On a connectivity by connectivity basis and until such time as a precertification process is in place, each party agrees to notify the other party in writing upon the discovery of a billing dispute. The disputing party agrees to provide the billing party sufficient documentation to investigate the dispute and may withhold any disputed amounts supported by such documentation. Until documentation is provided all outstanding billed amounts will be considered past due. In the event of a billing dispute, the parties will endeavor to resolve the dispute within sixty (60) calendar days of the dispute notification date. Resolution of the dispute is expected to occur at the first level of management resulting in a recommendation for settlement of the dispute.

1.15.2 If the issues are not resolved within the allotted time frame, each of the parties shall appoint a designated representative who has authority to settle the dispute and who is at a higher level of management than the persons with direct responsibility for administration of this Agreement. The designated representatives shall meet as often as they reasonably deem necessary in order to discuss the dispute and negotiate in good faith in an effort to resolve such dispute. The specific format for such discussions will be left to the discretion of the designated representatives, however all reasonable requests for relevant information made by one Party to the other Party shall be honored.

1.15.3 If the Parties are unable to resolve issues related to the disputed amounts within forty-five (45) days after the parties' appointment of designated representatives, the dispute will be resolved in accordance with the dispute resolution procedure set forth in Section 16 of the General Terms and Conditions of this Agreement, incorporated herein by this reference.

1.15.4 If a party disputes a charge and does not pay such charge by the payment due date, such charges shall be subject to late payment charges as set forth in Section 1.16 of this Attachment 6. If a party disputes charges and the dispute is resolved in favor of such party, the other party shall credit the bill of the disputing party for the amount of the disputed charges along with any late payment charges assessed no later than the second Bill Date after the resolution of the dispute. Accordingly, if a party disputes charges and the dispute is resolved in favor of the other party, the disputing party shall pay the other party the amount of the disputed charges and any associated late payment charges assessed no later than the second bill payment due date after the resolution of the dispute.

1.16 Late Payment Charges

1.16.1 If either Party fails to remit payment for any charges described in this Attachment 6 by the payment due date, or if a payment or any portion of a payment is received by either Party after the payment due date, or if a payment or any portion of a payment is received in funds which are not immediately available to the other Party, then a late payment penalty shall be assessed. For bills rendered by BellSouth for payment by AT&T, the late payment charge shall be calculated based on the portion of the payment not received by the payment due date times the late factor as set forth in the following BellSouth tariffs, based upon the service for which payment was not received: for general subscriber services, Section A2 of the General Subscriber Services Tariff; for private line service, Section B2 of the Private Line Service Tariff; and for access service, Section E2 of the Access Service Tariff. For bills rendered by AT&T for payment by BellSouth the late payment charge shall be calculated based on the portion of the payment not received by the payment date times the lesser of (i) .one and one-half percent (1 ½%) per month or (ii) the highest interest rate (in decimal value) which may be charged by law for commercial transactions, compounded daily for the number of days from the payment date to and including the date that payment is actual made. In no event, however, shall interest be assessed by AT&T on any previously assessed late payment charges. BellSouth shall only assess interest on previously assessed late payment charges in a state where it has the authority pursuant to its tariffs. Bill disputes shall not be submitted by either party for any charge on or after one (1) year following the bill date of the bill on which the charge first appears.

1.17 Discontinuance of Service

1.17.1 The procedures for discontinuing service to an end user are as follows:

1.17.1.1 Where possible, BellSouth will deny service to AT&T's end user on behalf of, and at the request of, AT&T. Upon restoration of the end user's service, restoral charges will apply and will be the responsibility of AT&T.

1.17.1.2 At the request of AT&T, BellSouth will disconnect an AT&T end user.

1.17.1.3 All requests by AT&T for denial or disconnection of an end user for nonpayment must be in writing.

1.17.1.4 AT&T will be made solely responsible for notifying the end user of the proposed disconnection of the service.

1.17.1.5 BellSouth may disconnect and reuse facilities when the facility is in a denied state and BellSouth has received an order to establish new

Florida July 2001 through October 2002

Docket No. 020919-TP
J. A. King Exhibit 3
Monthly Overcharges by BellSouth

STATE / MONTH	Estimated LATAwide Local Minutes of USE Incorrectly Billed at Access Rates	Access Rates Incorrectly Applied To Estimated LATAwide Local Minutes	Local Reciprocal Compensation Rates That Should have Been Applied To LATAwide Local Minutes Of Use	Credit Due for AT&T for LATAwide Local Minutes of Use Incorrectly Billed as Access Rates
FL				
			New Total Thru Oct 02	$ (6,310,426)
October-02	15,263,227	$ 0.002167	$ 0.001000	$ (315,491)
September-02	16,846,691	$ 0.022215	$ 0.001000	$ (357,406)
August-02	13,436,808	$ 0.022116	$ 0.001000	$ (283,732)
July-02	15,310,413	$ 0.022005	$ 0.001000	$ (321,600)
June-02	18,932,187	$ 0.022201	$ 0.001000	$ (401,376)
			Total Thru May 02	$ (4,630,822)
May-02	12,990,657	$ 0.024706	$ 0.001000	$ (307,950)
April-02	19,217,443	$ 0.022481	$ 0.001000	$ (412,814)
March-02	19,739,347	$ 0.022724	$ 0.001000	$ (428,812)
February-02	17,188,343	$ 0.025055	$ 0.001000	$ (413,467)
January-02	18,976,885	$ 0.024889	$ 0.001000	$ (453,329)
December-01	18,416,310	$ 0.024891	$ 0.001500	$ (430,781)
November-01	19,726,925	$ 0.024881	$ 0.001500	$ (461,235)
October-01	17,995,102	$ 0.024687	$ 0.001500	$ (417,251)
September-01	20,401,374	$ 0.022886	$ 0.001500	$ (436,294)
August-01	18,906,460	$ 0.022829	$ 0.001500	$ (403,260)
July-01	19,740,912	$ 0.025087	$ 0.001500	$ (465,629)

FLORIDA PUBLIC SERVICE COMMISSION
DOCKET NO. 020919-TP EXHIBIT NO. 20
COMPANY/ WITNESS: AT&T - BCP 1-BCP 16 (Prefiled Rebuttal) Peacock
DATE: 05-07-03

ATTACHMENT B

Florida

Issues for Arbitration between AT&T and BellSouth

	Issue	AT&T Position	BellSouth Position*
1.	Should calls to Internet service providers be treated as local traffic for the purposes of reciprocal compensation?	ISP calls should be treated as local traffic for purposes of reciprocal compensation. AT&T still incurs the cost of the ISP Traffic over its network. Additionally, such calls are treated as local under BellSouth's tariffs and the FCC has treated ISP Traffic as intrastate for jurisdictional separation purposes.	No. The FCC has definitively determined that ISP Traffic is interstate in nature. Therefore, such Traffic should not be treated as local for purposes of reciprocal compensation. The parties should track the minutes of ISP Traffic exchanged and true up the amount of compensation owed, if any, based on an effective rule promulgated by the FCC.
2.	What are the appropriate performance measurements and enforcement mechanisms that BellSouth should implement?	For AT&T to ensure its customers receive service equal in quality to that received by BellSouth customers, BellSouth must establish that it offers non-discriminatory support for total service resale, use of unbundled network elements (UNE's), and access to OSS. BellSouth should be required to provide an effective performance measurement methodology that contains: - A comprehensive set of comparative measurements that provides for disaggregation of its data to permit meaningful comparisons and full disclosure. - Business rules and calculations which reveal true performance and customer experiences. - A sound methodology for establishing benchmarks and designating appropriate retail analogs. - Statistical procedures that balance the possibility of concluding BellSouth favoritism exists when it does not with concluding there is no BellSouth favoritism when there is. - AT&T access to all the raw data that BellSouth uses for its ALEC performance reporting.	The Service Quality Measurements proposed by BellSouth incorporate all of the measurements and reporting intervals adopted by other commissions within the BellSouth region. These measurements, as well as the business rules utilized to calculate the measurements, represent a comprehensive look at the service provided to telecommunications carriers. BellSouth provides access to the raw data utilized to calculate the measurements and has worked hand in hand with AT&T and other telecommunications carriers in the development of an appropriate statistical methodology. BellSouth does not believe that the issue of appropriate, if any, enforcement mechanisms is an appropriate issue for arbitration and resolution by the FPSC. Without waiving its right to assert its legal position, BellSouth has voluntarily proposed enforcement mechanisms for inclusion in the AT&T/BellSouth Interconnection Agreement. The proposed enforcement mechanisms include the key, outcome oriented service quality measures required by state commissions in BellSouth's region and include either

*The position stated in this column is based on BellSouth's position stated in its Responses to AT&T's Petition for Arbitration filed in Georgia, Tennesee, Mississippi and North Carolina.

DOCUMENT NUMBER-DATE
02483 MAR 14 8
FPSC-COMMISSION CLERK

ATTACHMENT B

FLORIDA

Issues for Arbitration between AT&T and BellSouth

		Further, BellSouth should adopt an appropriate system of self-enforcing consequences to assure that the competitive local telecommunications markets envisioned by the 1996 Act will be able to develop and survive. The consequences must provide BellSouth with incentives sufficient to prevent BellSouth from inhibiting competition through discriminatory treatment of ALECs. Such consequences must be immediately imposed upon a demonstration of poor BellSouth performance. A self-enforcing system of consequences is needed to assure that BellSouth has appropriate incentives to comply, on an ongoing basis, with its Section 251 obligations to provide ALECs with non-discriminatory support regardless of whether a section 271 application has been made or approved. AT&T proposes the AT&T Performance Incentive Plan as the enforcement mechanism.	benchmarks or retail analogs as standards. The mechanisms are designed to prevent BellSouth from backsliding on delivery of service to AT&T once BellSouth has attained interLATA authority from the FCC. The remedies proposed are meaningful remedies designed to be, if applied, of significant impact to BellSouth.
3.	Should BellSouth be required to adopt validation and audit requirements which will enable AT&T to assure the accuracy and reliability of the performance data BellSouth provides to AT&T, and upon which the FPSC will ultimately rely when drawing conclusions about whether BellSouth meets its obligations under the Act?	BellSouth should be required to have an independent audit conducted of its performance measurement systems, paid for by BellSouth. Additional annual audits should be conducted and paid for 50% by BellSouth and 50% among the ALECs participating in the audit. Additionally, AT&T may request additional audits when performance measures are changed or added, to be paid for by BellSouth. Additionally, audits of individual measures should be conducted. The cost of a "mini-audit" shall be paid by AT&T unless the audit determines that BellSouth is not in compliance with the terms of the Agreement.	BellSouth will agree to undergo a comprehensive audit of the aggregate level reports for both BellSouth and the ALECs for each of the next five (5) years (2000-2005), to be conducted by an independent third party. The results of that audit will be made available to all the parties subject to proper safeguards to protect proprietary information. This aggregate level audit includes the following specifications: (1) the cost shall be borne 50% by BellSouth and 50% by the ALECs; (2) the independent third party auditor shall be selected with input from BellSouth, the FPSC and the ALECs; and (3) BellSouth, the FPSC and the ALECs shall jointly determine the scope of the audit. More frequent audits

ATTACHMENT B

FLORIDA

Issues for Arbitration between AT&T and BellSouth

			are not reasonable in view of the tremendous number of ALEC interconnection agreements into which BellSouth has entered.
4.	What does "currently combines" mean as that phrase is used in 57 C.F.R. §51.315(b)?	The Commission should allow AT&T to provide telecommunications services to any customer using any combination of elements that BellSouth routinely combines in its own network and to purchase such combinations at TELRIC rates. BellSouth should not be allowed to restrict AT&T from purchasing and using such combinations to only provide service to customers who currently receive retail service by means of the combined elements. This is the only interpretation of the term "currently combines" that is consistent with the nondiscrimination policy of the Act and which will promote rapid growth in competition in the local telephone market.	In the FCC's *Third Report and Order*, the FCC confirmed that BellSouth presently has no obligation to combine network elements for ALECs when those elements are not currently combined in BellSouth's network. The FCC rules, 51.315(c)-(f), that purported to require incumbents to combine unbundled network elements were vacated by the Eighth Circuit Court of Appeals and were not appealed to or reinstated by the Supreme Court. The question of whether those rules should be reinstated is pending before the Eighth Circuit, and the FCC explicitly declined to revisit those rules at this time. *Third Report and Order*, ¶ 481. The FCC also confirmed that when unbundled network elements, as defined by the FCC, are currently combined in BellSouth's network, BellSouth cannot separate those elements except upon request. 47 C.F.R. § 51.315(b). For example, when a loop and a port are currently combined by BellSouth to serve a particular customer, that combination of elements must be made available to ALECs. According to the FCC, requesting carriers are entitled to obtain such combinations "at unbundled network element prices." *Id.* at ¶ 480. There is no legal basis for the FPSC to adopt an expansive view of "currently combined" so as to obligate BellSouth to combine elements for ALECs. As the FCC made clear in its *Third Report and Order*, Rule

ATTACHMENT B

FLORIDA

Issues for Arbitration between AT&T and BellSouth

			51.315(b) applies to elements that are "in fact" combined. *See id.* ¶ 480 ("To the extent an unbundled loop is in fact connected to unbundled dedicated transport, the statute and our rule 51.315(b) require the incumbent to provide such elements to requesting carriers in combined form"). The FCC declined to adopt the definition of "currently combined," that would include all elements "ordinarily combined" in the incumbent's network. *Id.* (declining to "interpret rule 51.315(b) as requiring incumbents to combine unbundled network elements that are 'ordinarily combined' ...").
5.	Should BellSouth be permitted to charge AT&T a "glue charge" when BellSouth combines network elements?	BellSouth should not impose any additional charge on AT&T for any combination of network elements above the TELRIC cost of the combination.	See BellSouth's response to Issue 4, which is incorporated herein by reference as fully as if set out in its entirety.
6.	Under what rates, terms, and conditions may AT&T purchase network elements or combinations to replace services currently purchased from BellSouth tariffs? (UNEs, Attachment 2, Section 2.11)	Pursuant to FCC Orders, AT&T is permitted to purchase network elements and combinations to replace services currently purchased from BellSouth tariffs. The price to purchase network elements and combinations in such situations should be the TELRIC cost to do a record change in BellSouth's OSS, plus the recurring price of the appropriate network elements or combinations. BellSouth should not be permitted to place obstacles in the way of AT&T's ability to convert such services to network elements and combinations as easily and seamlessly as possible. Appropriate terms and conditions must also be ordered to ensure that AT&T is able to replace services with network elements/combinations of network elements.	Without waiver of its ability to avail itself of any available legal remedies, and in conformance to the guidelines set forth by the FCC in CC Docket No. 96-98 UNE Remand Orders dated Nov. 5, 1999 and Nov. 24, 1999, BellSouth will convert services currently purchased on a month to month basis by AT&T, or a BellSouth end user changing its service provider to AT&T, to the extent possible on a mechanized basis at a record change charge. As to services provided to AT&T or to a BellSouth end user changing its service provider to AT&T under a volume and term agreement or other contract basis, BellSouth will convert the services to the UNEs ordered by AT&T upon AT&T's payment of the appropriate early termination liabilities set forth in the volume and term agreement or contract.
7.	How should AT&T and	AT&T and BellSouth should	BellSouth offers interconnection

ATTACHMENT B

FLORIDA

Issues for Arbitration between AT&T and BellSouth

	BellSouth interconnect their networks in order to originate and complete calls to end-users? (Local Interconnection, Attachment 3)	interconnect on an equitable basis, which is hierarchically equivalent, and not maintain the imbalanced situation where AT&T incurs the expense of connecting throughout BellSouth's network, while BellSouth incurs the much lower cost of connecting at the edge of AT&T's network. AT&T's proposal also avoids use of limited collocation space that is better used for other purposes such as interconnection to UNE loops and advanced services. AT&T's proposal requires the two parties to work out a transition plan to "groom" the two networks.	in compliance with the requirements of the FCC rules and regulations as well as any state statute or regulation. Interconnection can be through delivery of facilities to a collocation or fiber meet arrangement or through the lease of facilities. Interconnection for AT&T originated Traffic must be accomplished through at least one interface within the BellSouth LATA and may be at an access tandem or local tandem. BellSouth, at its option, may designate one or more interfaces on its network for the delivery of its originating traffic to AT&T. BellSouth should not be required to incur additional unnecessary cost as a result of the selection of interconnection points by AT&T. If AT&T requires BellSouth to haul BellSouth originating traffic from the originating local calling area to a point of interconnection outside that local calling area, AT&T should compensate BellSouth for its transport costs.
8.	What terms and conditions, and what separate rates if any, should apply for AT&T to gain access to and use BellSouth facilities to serve multi-unit installations?	BellSouth should cooperate with AT&T, upon request, in establishing a single point of interconnection on a case-by-case basis at multiunit installations. Where such points of interconnection do not exist, BellSouth should construct such single points of interconnection, and AT&T should be charged no more than its fair share, as one service provider using this facility, of the forward-looking price. The single point of interconnection should be fully accessible by AT&T technicians without the necessity of having a BellSouth technician present.	Without waiver of its ability to avail itself of any available legal remedies, BellSouth will perform in conformance with the guidelines of 47 CFR §51.319(a)(2)(E) as set forth by the FCC in CC Docket No. 96-98 UNE Remand Order.
9.	Should BellSouth provide local circuit switching at UNE rates to allow AT&T to serve the first three lines	Yes. Customers should be allowed to freely choose their local service provider regardless of the number of lines that customer purchases. AT&T is	No. If an end user in Density Zone 1 has four or more lines, AT&T is not entitled to purchase local circuit switching from BellSouth at UNE rates to serve

ATTACHMENT B

FLORIDA

Issues for Arbitration between AT&T and BellSouth

	provided to a customer located in Density Zone 1 as determined by NECA Tariff No. 4 in effect on January 1, 1999 ("Density Zone 1")?	entitled to purchase local circuit switching at UNE rates to provide service to customers in Density Zone 1 for the first, second, and third lines purchased by such customers even if those customers have four lines or more.	that end user.
10.	Should BellSouth preclude AT&T from purchasing local circuit switching from BellSouth at UNE rates when a Density Zone 1 existing AT&T customer with 1-3 lines increases its lines to 4 or more? (UNEs, Attachment 2, Section 6.3.1.3 and 6.3.1.4)	No. In a level competitive environment, customer services and rates should not be negatively impacted by BellSouth's election to increase AT&T's costs of providing local service simply because the customer adds a fourth line to its location.	Yes. Once an end user has four lines to the location, AT&T is not entitled to purchase local circuit switching at UNE rates from BellSouth to provide any lines to that end user, regardless of whether it is line 1, 2, 3, or 4.
11.	Should BellSouth be allowed to aggregate lines provided to multiple locations of a single customer to restrict AT&T's ability to purchase local circuit switching at UNE rates to serve any of the lines of that customer? (UNEs, Attachment 2, Section 6.3.1.3 and 6.3.1.4)	No. The total number of lines served to all of the customers' locations should not be aggregated. If a customer, for example, has several locations, each served by 3 lines or less, AT&T should be entitled to purchase local circuit switching from BellSouth to serve each of the locations.	Yes. All of the lines provided to a customer end-user, including those at every end-user location (where an end-user has multiple locations), can be aggregated to restrict BellSouth's obligation to provide circuit switching at UNE rates.
12.	Should AT&T be permitted to charge tandem rate elements when its switch serves a geographic area comparable to that served by BellSouth's tandem switch? (Local Interconnection, Attachment 3, Section 1.3)	Yes. When AT&T's switches serve a geographic area comparable to that served by BellSouth's tandem switch, then AT&T should be permitted to charge tandem rate elements.	AT&T must demonstrate to the FPSC that (1) its switch serves a comparable geographic area and (2) the switch performs functions similar to those performed by BellSouth's tandem switch. Simply being capable of serving a comparable geographic area or of performing tandem switching functions is not sufficient evidence.
13.	What are the appropriate means for BellSouth to provide unbundled local loops for provision of DSL service when such loops are provisioned on digital loop carrier facilities? (UNEs, Attachment 2, Section	When existing loops are provisioned on digital loop carrier facilities, and AT&T requests such loops in order to provide xDSL service, BellSouth should provide AT&T with access to other loops or subloops so that AT&T may provide xDSL service to a customer.	In the case where an existing loop is provisioned on a BellSouth digital loop carrier facility, and the existing loop cannot provide xDSL capable service, BellSouth is not required to provide AT&T alternative loops to allow AT&T to provide the service over that loop. AT&T would be required

ATTACHMENT B

FLORIDA

Issues for Arbitration between AT&T and BellSouth

	3.11.2)		to purchase an xDSL capable loop through a separate and distinct ordering process.
14.	What coordinated cut-over process should be implemented to ensure accurate, reliable and timely cut-overs when a customer changes local service from BellSouth to AT&T? (UNEs, Attachment 2, Section 3.8 et seq.)	The coordinated cut-over process proposed by AT&T should be implemented to ensure accurate, reliable, and timely cut-overs. BellSouth's proposed process does not ensure that customers switching from BellSouth to AT&T receive the same treatment that BellSouth customers receive. Moreover, BellSouth does not follow its own process.	The coordinated cut-over process proposed by BellSouth does ensure accurate, reliable and timely cut-overs. BellSouth's current SQMs measure BellSouth's performance in this area and sufficiently demonstrate that AT&T customers switching from BellSouth receive non-discriminatory treatment.
15.	Should AT&T local calls that use BellSouth's switching UNE be subject to "bill and keep" compensation arrangement, even though reciprocal compensation will be paid for terminating local calls not using BellSouth's UNE switch? (Local Interconnection, Attachment 3, Section 4.10; Billing & Recording, Attachment 6, Section 2.1.6; Exhibit E and Attachment 3, Section 4.10)	Due to the complexities and expense of recording and billing for reciprocal compensation on UNE-switched calls, AT&T believes that bill and keep should be used for local calls originated from and terminated to AT&T when it uses BellSouth's UNE switching. Other telecommunication carriers who originate or terminate calls to AT&T end-users served by UNE switching will be unable to determine that such calls went to AT&T as opposed to BellSouth. All call records will continue to look like they were made to BellSouth.	When the end user of a facilities-based ALEC calls an AT&T local end user where AT&T is not providing its own facilities, but rather is using a UNE-P purchased from BellSouth to terminate the call, BellSouth should be permitted to charge AT&T for the UNEs AT&T uses, and AT&T should then charge the originating ALEC reciprocal compensation for terminating the call for the ALEC (or enter into a bill and keep arrangement with the ALEC). When AT&T terminates a call using BellSouth's local switching, BellSouth will provide the necessary recorded information to enable AT&T to bill the other carriers the charges those carriers have incurred. When AT&T leases circuit switching from BellSouth AT&T is entitled to all revenues associated with that functions, including the revenues associated with terminating calls for other carriers and is obligated in turn to pay BellSouth for the network elements used.

ATTACHMENT B

FLORIDA

Issues for Arbitration between AT&T and BellSouth

16.	What is the appropriate treatment of outbound voice calls over Internet protocol ("IP") telephony, as it pertains to reciprocal compensation? (Local Interconnection, Attachment 3, Section 6.1.9)	Until the FCC issues rules on how IP Traffic is to be treated, no restrictions should be imposed. Further, there is no way to measure and record such Traffic as requested by BellSouth. In any event, this is not a proper subject for negotiation in an interconnection agreement.	IP telephony is utilized in a manner consistent with traditional long-distance calling. Therefore, due to the increasing use of IP technology to transport voice long distance Traffic, it is important to specify in the Agreement that Voice over the Internet Protocol Traffic is switched access Traffic and not local Traffic.
17.	In calculating Percent Local Usage (PLU) for purposes of reciprocal compensation, should AT&T be allowed to report the Traffic on a monthly, rather than quarterly, basis? (Local Interconnection, Attachment 3, Section 6.1.11)	Yes. BellSouth should be required to continue its current practice of calculating the PLU on a monthly basis. As AT&T enters the local market, and local usage increases, it remains necessary that BellSouth not change the current practice which has been adequate to this point. BellSouth proposes changing to a quarterly basis, which AT&T opposes.	BellSouth offered to accept PLU reporting on an otherwise than quarterly basis (i.e. monthly) for a period of 12 months or until the PLU stabilizes when AT&T: (1) gains a large customer whose addition would have an impact on the PLU; (2) opens a new calling area; or (3) begins marketing in a new area. Otherwise, PLU would be reported quarterly, which is consistent with industry practice.
18.	What are the appropriate intervals for the delivery of collocation space to AT&T? (Collocation, Attachment 4, Section 6.4). (AT&T anticipates that this issue will be settled based on the FPSC's Order on Collocation in Docket Nos. 981834-TP and 990321-TP)	FCC rules require that BellSouth provide collocation within intervals no greater than the best practice intervals of other ILECS. Accordingly, BellSouth should provide collocation within the following intervals: (1) virtual and cageless: 60 calendar days; and (2) Physical (caged): 30 calendar days if AT&T does the construction; and 90 calendar days if BellSouth does the construction. In the event of unforeseen circumstances, BellSouth should apply to the FPSC for suspension of or relief from the intervals.	BellSouth has proposed an interval of no greater than 100 calendar days for the provision of physical collocation arrangements under ordinary conditions. Such a proposal is reasonable and necessary.
19.	When AT&T and BellSouth have adjoining facilities in a building outside BellSouth's central office, should AT&T be able to purchase cross connect facilities to connect to BellSouth or other ALEC networks without having to collocate in BellSouth's	Yes. When BellSouth and AT&T facilities are in close proximity, in order to achieve network efficiency, AT&T should be able to cross connect its network directly from its space to BellSouth's space without having to purchase collocation space from BellSouth.	No. AT&T's proposal has the effect of expanding the definition of premises beyond that which is required by the FCC regulations or that which is necessary. AT&T simply wishes to take advantage of its former corporate ownership of BellSouth. BellSouth's agreement to AT&T's terms would cause BellSouth to provide AT&T with more favorable treatment than

ATTACHMENT B

FLORIDA

Issues for Arbitration between AT&T and BellSouth

	portion of the building? (Collocation, Attachment 4, Section 1.6) (AT&T anticipates that this issue will be settled based on the FPSC's Order on Collocation in Docket Nos. 981834-TP and 990321-TP.)		other new entrants.
20.	Is conducting a statewide investigation of criminal history records for each AT&T employee or agent being considered to work on a BellSouth premises a security measure that BellSouth may impose on AT&T? (Collocation, Attachment 4, Section 11.1, 11.2, 11.4, 11.5)	No. These requirements are unreasonable and are inconsistent with the examples of measures found by the FCC to be reasonable, e.g. ID badges, security cameras, cabinet enclosures, and separate central building entrances. Such requirements are excessive, increasing collocation costs without providing additional protection to BellSouth. Moreover, such requirements are discriminatory as applied to AT&T. Further, AT&T is willing to indemnify BellSouth, on a reciprocal basis, for any bodily injury or property damage caused by AT&T's employees or agents.	Yes. BellSouth performs criminal background checks on its employees prior to hiring and as such can require AT&T to do the same in order for AT&T to have unescorted access to the central offices and other premises that house the public switched network. Such security requirements are reasonable in light of the assets being protected as well as the number of new entrants and other telecommunications carriers relying on the integrity and reliability of BellSouth's network. AT&T's offer to indemnify BellSouth for bodily injury or property damage is not sufficient in light of the asset at risk.
21.	Unless otherwise specified, where Attachment 4 regarding collocation refers to days, should those days be calendar days or business days? (Collocation, Attachment 4) (AT&T anticipates that this issue will be settled based on the FPSC's Order on Collocation in Docket Nos. 981834-TP and 990321-TP.)	Days should be calendar days. Business day intervals are inherently longer and less predictable than calendar day intervals, thereby delaying delivery of collocation space within a reasonable timeframe.	Unless otherwise specified (for example, see BellSouth's response to Issue 18, days should be business days. Given the nature and complexity of the tasks to be completed, business days are reasonable.

ATTACHMENT B

FLORIDA

Issues for Arbitration between AT&T and BellSouth

22.	What are the appropriate recurring and non recurring charges for the collocation items for which charges have not been established or are not TELRIC compliant as listed in Exhibit A to Collocation, Attachment 4 of AT&T's Proposed Interconnection Agreement. (Collocation, Attachment 4 and Exhibit A)	The FCC's TELRIC pricing rules require that BellSouth charge no more for any collocation than the TELRIC cost of collocation.	The appropriate rate is a cost-based rate calculated pursuant to a final FCC-compliant methodology.
23.	Has BellSouth provided sufficient customized routing in accordance with State and Federal law to allow it to avoid providing Operator Services/Directory Assistance ("OS/DA") as a UNE?	No. BellSouth does not provide AT&T adequate customized routing. BellSouth has not provided sufficient information on its untested AIN solution, including rates. If BellSouth's proposal is line class codes ("LCC's"), this solution may not be viable in every central office. Thus, until these methods are proven viable, AT&T may purchase OS/DA as an unbundled network element.	Yes. BellSouth has available both an AIN solution for customized routing as well as the LCC solution that was advocated by AT&T during the last round of arbitrations. AT&T participated in testing BellSouth's AIN customized routing solution.
24.	Should BellSouth be required to electronically process and provision customer specific orders for OS/DA if AT&T orders an unbranded or AT&T branded platform? (Attachment 7, Sections 3.20-3.24)	Yes. BellSouth should process and provision AT&T's customer specific orders at parity with BellSouth's processing and provisioning of its own customers orders.	See BellSouth's response to Issue 23, which is incorporated herein by reference as fully as if set out in its entirety. However, should the Commission resolve Issue 23 in AT&T's favor, BellSouth will only provide electronic processing and provisioning of AT&T's OS/DA orders to a BellSouth branded platform. Orders for an unbranded or AT&T branded platform must be processed manually. Any proposed electronic ordering methodology should be handled through the EICCP, not through an arbitration proceeding.
25.	What procedure should be established for AT&T to obtain loop-	BellSouth should accept from AT&T two types of orders, 1) an Infrastructure Provisioning Order	BellSouth has proposed a procedure whereby AT&T can order loop/port combinations

ATTACHMENT B

FLORIDA

Issues for Arbitration between AT&T and BellSouth

	port combinations (UNE-P) using both Infrastructure and Customer Specific Provisioning? (Attachment 7, Sections 3.20 – 3.24)	and 2) a Customer Specific Provisioning Order. The Infrastructure Provisioning Order (which consists of an Infrastructure Footprint Form and an Operator Services and Directory Assistance Questionnaire) notifies BellSouth of the common use of Network Elements and Combinations that AT&T will require geographically by End Office, Rate Center, LATA or State. The Footprint Order should be acknowledged within 24 hours and responded to within 5 business days thereafter. The Customer Specific Provisioning Order should be the LSR. LSRs for UNE-P should be received electronically, provided with ordering flow-thorough and provisioned at parity with BellSouth retail. Electronic LSRs with flow through ordering should be available for orders using either an unbranded or an AT&T branded platform.	using BellSouth OS/DA platform and AT&T branding. BellSouth is not opposed to AT&T making a one-time designation to BellSouth to have all of AT&T's end user calls routed to the appropriate OS/DA platform. AT&T, however, refuses to make a single designation and seeks instead a variety of OS/DA routing plans. Therefore, AT&T should be required to populate the appropriate Line Class Code on the LSR submitted to the LCSC. If AT&T decided upon, and communicated, a single OS/DA routing plan, then BellSouth could determine the appropriate Line Class Code and AT&T would not be required to provide such code on the LSR. AT&T will not, however, make such a designation.
26.	May the Interconnection Agreement contain conditions on the purchase of any BellSouth exchange?	The rates, terms, and conditions of this Agreement should govern the relationship between AT&T and the third party purchaser. BellSouth should not be permitted to remove the benefits of competition from a territory by selling it to another party that may assert a rural exemption or undermine AT&T's investment in competition by changing the rules. Further, AT&T should not be faced with the uncertainty of negotiating a completely new set of terms and conditions with another provider who purchases a BellSouth local exchange. Similarly, the FPSC should not be required to review new sets of terms and conditions each time there is a sale of a local exchange.	The contract language proposed by AT&T is unduly burdensome on BellSouth and any prospective purchaser of a BellSouth exchange. The requirements of the Act, specifically 47 USC §§251 (h), should apply.
27.	Should the Commission or a third party commercial arbitrator resolve disputes under the Interconnection	More issues will arise now that AT&T is entering the market and will need to be resolved quickly. These issues will be more business oriented and less policy	BellSouth has had experience with commercial arbitration in the resolution of disputes under interconnection agreements negotiated pursuant to 47 USC

ATTACHMENT B

FLORIDA

Issues for Arbitration between AT&T and BellSouth

	Agreement?	oriented, and thus, more appropriately handled by commercial arbitrators. The parties should continue to have the right to resolve operational issues in a commercial forum on an expedited basis; thereby, limiting the customer-affecting impact of any such disputes.	§252 and has found such arbitration to be expensive and unduly lengthy in nature. The Eighth Circuit Court of Appeals in *Iowa Utilities Board* ruled that the FPSC is charged with the power to resolve disputes relating to interconnection agreements and BellSouth should not be forced to waive its right to seek resolution of such issues before the FPSC.
28.	What is the proper timeframe for either party to render bills for overdue charges? (Billing & Recording, Attachment 6, Section 1.2.3)	BellSouth should be required to continue its current practice of not rendering bills for charges more than one year old. BellSouth does not render bills to its own retail customers for charges more than one year old, and BellSouth should not bill AT&T, as a wholesale customer, any differently.	BellSouth should not be required by contract to waive its statutory right to collect charges for services provided but for which payment has not been received at any point during the applicable statute of limitations. Of course, such time period would also extend to AT&T's right to complain about a billing.
29.	What are the proper parameters sufficient to prevent fraudulent billing for reciprocal compensation? (Local Interconnection, Attachment 3, Section 6.1.2)	Attachment 3, Section 6.1.2, which is the language currently in place, sufficiently and adequately defines interconnection; thereby, prohibiting the fraudulent billing for reciprocal compensation. In the event that a contract term is breached, the proper recourse is Dispute Resolution.	The current Agreement does not adequately address the issues brought to light by the conduct of some new entrants in the marketplace and because of 47 USC §252(i), BellSouth must protect itself from such conduct and the language proposed by BellSouth is reasonable.
30.	Should the Change Control Process be sufficiently comprehensive to ensure that there are processes to handle, at a minimum the following situations: (OSS, Attachment 7, Exhibit A)	Yes. Change Control should apply to the entire range of transactions required between AT&T and BellSouth in order for AT&T to utilize Services and Elements. Both electronic and manual interfaces and processes are required to establish and maintain a business relationship with BellSouth and conduct day-to-day business transactions. A comprehensive Change Control Process should provide "cradle to grave" coverage of the life cycle of an interface or process, and its supporting documentation (such as specifications, business rules, methods, and procedures). Thus, implementation of new interfaces, management of interfaces in production (including defect correction), and the retirement of	The terms and conditions of the I-CCP, as well as the subjects to which it should apply, should be negotiated between the I-CCP committee members and cannot be properly arbitrated in a proceeding that involves only BellSouth and AT&T. Subject to this, BellSouth will respond to the individual items AT&T has identified through separate responses given below. To the extent such issues are arbitrated, the current I-CCP is more than adequate to serve the needs of the ALEC community and address AT&T's concerns.

ATTACHMENT B

FLORIDA

Issues for Arbitration between AT&T and BellSouth

		interfaces should be addressed. Change Control should provide a normal process, an exception process, an escalation process, and a dispute resolution process with ultimate recourse to the Commission, mediation, or court adjudication. Additionally, a process by which the Change Control Process can be changed should be specified. The existing Electronic Interface Change Control Process (EICCP) and the Interim Change Control Process (I-CCP) BellSouth has proposed are not comprehensive. AT&T's proposal and the existing EICCP/I-CCP coverage are compared below.	

		Situation	AT&T Proposal	EICCP/I-CCP AT&T's View	EICCP/I-CCP BellSouth's View
		a) introduction of new electronic interfaces?	Yes.	No.	This subpart is addressed in the I-CCP today.
		b) retirement of existing interfaces?	Yes.	No.	This subpart is addressed in the I-CCP today.
		c) exceptions to the process?	Yes.	No.	This subpart is addressed in the I-CCP today.
		d) documentation, including training?	Yes.	BellSouth may agree in theory, but has implemented all documentation changes unilaterally and outside the I-CCP.	BellSouth may agree in theory, but has implemented all documentation changes unilaterally and outside the EICCP.

ATTACHMENT B

FLORIDA

Issues for Arbitration between AT&T and BellSouth

		Situation	AT&T Proposal	EICCP/I-CCP AT&T's View	EICCP/I-CCP BellSouth's View
		e) defect correction?	Yes.	Treatment of defects is being implemented into the I-CCP currently.	Defects are being implemented into the EICCP currently.
		f) emergency changes (defect correction)?	Yes.	BellSouth may agree in theory, but defects have been excluded from I-CCP.	The Type 1 system outages are defined in the interim change control process but are handled through the EC Support Help Desk.
		g) an eight step cycle, repeated monthly?	Yes.	No; an 11-step process executed three times a year is sufficient.	For non-Type 1 issues, BellSouth has an 11-step process in I-CCP today with variable inputs and outputs for each step.
		h) a firm schedule for notifications associated with changes initiated by BellSouth?	Yes	No.	BellSouth will provide 30-day notification for ALEC-impacting changes.
		i) a process for dispute resolution, including referral to state utility commissions or courts?	Yes.	No. BellSouth holds default power to implement or not implement any change, at its option.	The I-CCP contains a dispute resolution process. In the event that an issue is not resolved through the I-CCP's escalation process, BellSouth and the affected ALEC(s) will form a Joint Investigative Team of Subject Matter Experts. If the dispute cannot be resolved after this step, then either party may file an appropriate request for resolution of the dispute with the appropriate state commission.
		Situation	**AT&T Proposal**	**EICCP/I-CCP AT&T's View**	**EICCP/I-CCP BellSouth's View**

ATTACHMENT B

FLORIDA

Issues for Arbitration between AT&T and BellSouth

		j) a process for the escalation of changes in process?	Yes.	No.	BellSouth is implementing escalation procedures for the I-CCP.
31.	What should be the resolution of the following OSS issues currently pending in the change control process but not yet provided? (OSS, Attachment 7, Exhibit A)	The issues AT&T is bringing forward for arbitration have been at issue between the parties for various periods of time. The current EICCP process is hostage to BellSouth's default power to implement or not implement any change at its option. This default power exists because the EICCP process is not subject to regulatory oversight. Only arbitration provides AT&T with a means by which it can obtain the requested capabilities from BellSouth in an assured and timely manner. Further, in the absence of a binding methodology by which the industry can effect change, change can only be initiated by the actions of two parties which can then be expanded to incorporate others.	Issues such as those delineated in this issue should be resolved in the I-CCP. These are industry issues more properly resolved in another forum and not in this two-party arbitration.		
	a) parsed customer service records for pre-ordering?	BellSouth should provide parsed customer service records for preordering pursuant to industry standards. AT&T needs this in order to fully integrate its ordering systems with BellSouth's and to obtain the functionality now available to BellSouth. BellSouth's internal systems parse the sections and fields of the CSR as needed to meet software program requirements precluding the need for service representatives to re-enter CSR information when processing orders. This item has been an industry standard since the publication of the LSOG3 guidelines.	Issues such as those delineated in this issue should be resolved in the I-CCP. These are industry issues more properly resolved in another forum and not in this two-party arbitration.		
	b) ability to submit orders electronically for all services and elements?	BellSouth should provide the ability to submit orders electronically for all services and elements. Lack of electronic	Requests for changes or revisions to BellSouth's electronic interfaces to its OSS should be submitted through the		

ATTACHMENT B

FLORIDA

Issues for Arbitration between AT&T and BellSouth

		ordering increases the possibility of errors and increases costs. BellSouth reported order flow-through for business services for two years before taking the position that these requests do not flow through. BellSouth formerly claimed only that complex business requests did not flow through, but even then, BellSouth admits that its service representatives type their requests into a front end system (DOE or SONGS), which sends the request to SOCS, which then accepts valid requests and issues the required service orders. Examples of instances in which AT&T requires electronic ordering capability are the UNE Platform, handling of remaining service on partial migrations, use of LSR fields to establish proper billing accounts, ability to order xDSL loops, ability to order digital loops, ability to order complex directory listings, ability to order loops and LNP on a single order, and ability to change main account number on a single order.	I-CCP. This process allows BellSouth and the ALEC community to review, prioritize and manage changes and revisions to the electronic interfaces based on the needs of the ALEC participants. The ALEC participants control this process and the associated timelines. Although to BellSouth's knowledge no ALEC has submitted this request to the I-CCP, the I-CCP would be the appropriate forum to handle such a request.
	c) electronic processing after electronic ordering, without subsequent manual processing by BellSouth personnel?	BellSouth should provide electronic processing after electronic ordering. See (b), above. Examples of instances in which AT&T submits electronic orders that are subsequently processed manually include LNP, UNE-P with LCC, and migrations merging existing accounts, related orders. AT&T has submitted change control requests and participated in other discussions aimed at improving the subsequent manual process pending full automation. Examples include worklist mechanization and a Flow-through Mechanization Project.	Requests for changes or revisions to BellSouth's electronic interfaces to its OSS should be submitted through the I-CCP. This process allows BellSouth and the ALEC community to review, prioritize and manage changes and revisions to the electronic interfaces based on the needs of the ALEC participants. The ALEC participants control this process and the associated timelines. Although to BellSouth's knowledge no ALEC has submitted this request to the I-CCP, the I-CCP would be the appropriate forum to handle such a request. Non-discriminatory access to BellSouth's OSS does not mean

ATTACHMENT B

FLORIDA

Issues for Arbitration between AT&T and BellSouth

			that all services and elements must be ordered electronically with no manual handling. Some services, such as complex services, require manual handling by BellSouth's account teams for BellSouth retail customers. Processing of requests for ALECs may also require some manual processing for these same functions. Local service requests for some types of services are submitted electronically but "fall out" by design for processing. Even though the requests by design "fall out" for processing, electronic submission of the request improves the overall efficiency and effectiveness of order processing.
32.	Should BellSouth provide AT&T with the ability to access, via EBI/ECTA, the full functionality available to BellSouth from TAFI and WFA? (OSS, Attachment 7)	Yes. TAFI is a non-integrateable interface so AT&T must make additional entries into its own maintenance and repair systems, while BellSouth need only make this entry once. EBI/ECTA is a machine-to-machine interface capable of integration but with limited functional capabilities. It is technically feasible to provide the full suite of TAFI functions via EBI/ECTA.	BellSouth provides AT&T with complete access to TAFI and has complied with the current standards for ECTA. Future enhancements to ECTA shall be through the EICCP.
33.	Should AT&T be allowed to share the spectrum on a local loop for voice and data when AT&T purchases a loop/port combination and if so, under what rates, terms, and conditions? (UNE's, Attachment 2, Section 3.10)	Yes. BellSouth's position that sharing of the spectrum on local loop/port combination is only permitted when BellSouth utilizes the portion of the spectrum to provide voice is discriminatory and anti-competitive. Any purchaser of local loops from BellSouth should be allowed to use the loop in providing both voice and data at the same time. There are no technical constraints to this arrangement. The Commission's ordering of such arrangements will further the deployment of advanced data services to all portions of the state, and will not be dependent on the deployment schedule of BellSouth alone.	No. BellSouth only will allow AT&T to share the spectrum on a local loop/port combination when BellSouth utilizes the portion of the spectrum to provide voice.

ATTACHMENT B

FLORIDA

Issues for Arbitration between AT&T and BellSouth

34.	What Are the appropriate rates and charges for unbundled network elements and combinations of network elements?	Issues related to rates and charges will be taken up in Docket No. 990649-TP, as discussed in the Commission's orders.	Issues related to rates and charges will be taken up in Docket No. 990649-TP, as discussed in the Commission's orders.

ATTACHMENT 3

LOCAL INTERCONNECTION

TABLE OF CONTENTS

1. NETWORK INTERCONNECTION 1

2. METHODS OF INTERCONNECTION 7

3. INTERCONNECTION TRUNKING AND ROUTING 11

4. NETWORK DESIGN AND MANAGEMENT FOR INTERCONNECTION 21

5. NETWORK MAINTENANCE 29

6. INTERCONNECTION COMPENSATION 28

EXHIBIT A Rates for Interconnection

EXHIBIT B Space License Terms and Conditions

EXHIBIT C BellSouth Proposed Preferred Interconnection Architecture

EXHIBIT D BellSouth Proposed One Way Trunking Requirement

EXHIBIT E BellSouth Proposed Two Way Trunking Requirement

EXHIBIT F BellSouth Proposed Super Group Interconnection Architecture

LOCAL INTERCONNECTION

1 NETWORK INTERCONNECTION

1.1 The Parties shall provide interconnection with each other's network for the transmission and routing of telephone exchange service (local) and exchange access (intraLATA toll and switched access).

1.2 **DISAGREE**

AT&T PROPOSAL

For the purpose of accessing UNEs provided by BellSouth, BellSouth shall permit AT&T to interconnect with BellSouth at any technically feasible point, including tandems, end offices, designated points of interface (facility or switch) or customer premises. Nothing in this Attachment 3 shall limit AT&T's right to interconnect with BellSouth for access to UNEs. ~~BellSouth shall provide interconnection with BellSouth's network at any technically feasible point within BellSouth's network.~~

BST PROPOSAL

BellSouth shall provide interconnection with BellSouth's network at any technically feasible point within BellSouth's network.

1.3 **DISAGREE**

AT&T PROPOSAL

For the purpose of receiving Local Traffic, IntraLATA Toll Traffic, Transit Traffic and Meet Point Traffic (collectively "Interconnection Traffic") from the other party, the parties shall mutually agree to the quantity and location of the Points of Interconnection that each party will establish within each respective LATA. The Point of Interconnection ("POI") is the point at which the originating Party delivers its originated traffic to the terminating Party. The POI locations of one Party may be exactly the same, partially the same or completely different than the POI locations of the other Party.

In the event that the parties cannot reach mutual agreement as to the quantity of POIs, the default shall be the quantity of BellSouth tandems and AT&T tandems within the LATA.

In the event that the parties cannot reach mutual agreement as to the location of POIs, the default shall be the location of each Party's tandem switches.

For purposes of this Attachment 3, every AT&T switch is deemed to be a tandem switch. ~~AT&T shall provide interconnection to BellSouth at any mutually agreed upon point.~~

BST PROPOSAL

AT&T shall provide interconnection to BellSouth at any mutually agreed upon point.

1.4 **DISAGREE**

AT&T PROPOSAL

Following the establishment of the quantity and location of POIs, each Party shall specify to the other Party the POI associated with each switch it operates. The sending Party agrees to terminate its Interconnection Traffic at the POI specified by the receiving Party or, when mutually agreed to, a secondary POI identified in any jointly-developed trunk service plans.

BST PROPOSAL

AT&T must establish, at a minimum, a single Point of Presence, Point of Interface, and Point of Interconnection with BellSouth within the LATA for the delivery of AT&T's originated local, intraLATA toll terminated to BellSouth and transit traffic terminated to other than BellSouth. If AT&T chooses to interconnect at a single Point of Interconnection within a LATA, the interconnection must be at a BellSouth access or local tandem. Furthermore, AT&T must establish Points of Interconnection at all BellSouth access and local tandems where AT&T NXXs are "homed." A "Homing" arrangement is defined by a "Final" Trunk Group between the BellSouth access or local tandem and AT&T End Office switch. A "Final" Trunk Group is the last choice telecommunications path between the access or local tandem and End Office switch. It is AT&T's responsibility to enter its own NPA/NXX access and/or local tandem "homing" arrangements into the national Local Exchange Routing Guide ("LERG"). In order for AT&T to home its NPA/NXX(s) on a BellSouth access or local tandem, AT&T's NPA/NXX(s) must be assigned to an exchange rate center area served by that BellSouth access or local tandem and as specified by BellSouth.

1.5 A Point of Presence is the physical location (a structure where the environmental, power, air conditioning, etc. specifications for a Party's terminating equipment can be met) at which a Party establishes itself for obtaining access to the other Party's network. The Point of Presence is the physical location within which the Point(s) of Interface occur.

1.6 A Point of Interface is the physical telecommunications interface between BellSouth and AT&T's interconnection facilities. It establishes the technical interface and point of operational responsibility. The primary purpose of the Point of Interface is to serve as the terminus for each Party's interconnection facilities. The Point of Interface has the following main characteristics:

1.6.1 It is a cross-connect point to allow connection, disconnection, transfer or restoration of service.

1.6.2 It is a point where BellSouth and AT&T can verify and maintain specific performance objectives.

1.6.3 It is specified accordingly to the interface offered in this Attachment 3.

1.6.4 **The Parties will provide or will cause to be provided equipment to interface with the equipment on the customer premises. [OPEN-BST]**

1.7 **DISAGREE**

AT&T PROPOSAL

~~**The Point of Interconnection is the point at which the originating Party delivers its originated traffic to the terminating Party's first point of switching on the terminating Party's common (shared) network for call transport and termination. Points of Interconnection are available at either access tandems, local tandems, End Offices, or any other technically feasible point, as described in this Agreement. AT&T's requested Point of Interconnection will also be used for the receipt and delivery of transit traffic at BellSouth access and local tandems. Points of Interconnection established at the BellSouth local tandem apply only to AT&T-originated local and local originating and terminating transit traffic.**~~

BST PROPOSAL

The Point of Interconnection is the point at which the originating Party delivers its originated traffic to the terminating Party's first

point of switching on the terminating Party's common (shared) network for call transport and termination. Points of Interconnection are available at either access tandems, local tandems, End Offices, or any other technically feasible point, as described in this Agreement. AT&T's requested Point of Interconnection will also be used for the receipt and delivery of transit traffic at BellSouth access and local tandems. Points of Interconnection established at the BellSouth local tandem apply only to AT&T-originated local and local originating and terminating transit traffic.

1.8 The Parties will work cooperatively to establish the most efficient trunking network in accordance with the provisions set forth in this Attachment 3 and accepted industry practices.

1.9 Each party will be responsible for engineering its network (i.e., the underlying facilities on which trunks are provisioned) on its side of the Point of Interface. Each Party shall establish Points of Presence and Points of Interface for the delivery of its originated local and intraLATA toll traffic to the other Party. The Point of Interface may not necessarily be established at the Point of Interconnection.

1.10 **DISAGREE**

AT&T PROPOSAL

~~**BellSouth shall designate the Points of Presence and Points of Interface for the delivery of its originated local and intraLATA toll traffic to AT&T for call transport and termination by AT&T.**~~

BST PROPOSAL

BellSouth shall designate the Points of Presence and Points of Interface for the delivery of its originated local and intraLATA toll traffic to AT&T for call transport and termination by AT&T.

1.11 **DISAGREE**

AT&T PROPOSAL

~~**For the purposes of this Attachment 3, Local Channel is defined as a switch transport facility between a Party's Point of Presence and its designated serving wire center.**~~

BST PROPOSAL

For the purposes of this Attachment 3, Local Channel is defined as a switch transport facility between a Party's Point of Presence and its designated serving wire center.

1.12 For the purposes of this Attachment 3, Serving Wire Center is defined as the wire center owned by one Party from which the other Party would normally obtain dial tone for its Point of Presence.

1.13 **DISAGREE**

AT&T PROPOSAL

For the purposes of this Attachment 3, Dedicated Transport is defined as a **transport facility between two points specified by the requesting Party.**

BST PROPOSAL

For the purposes of this Attachment 3, Dedicated Transport is defined as a **switch transport facility between a Party's designated serving wire center and the first point of switching on the other Party's common (shared) network.**

1.14 Prices for interconnection facilities are contained in Exhibit A to this Attachment.

2 METHODS OF INTERCONNECTION

2.1 The Parties shall interconnect their networks utilizing one of the following methods in accordance with the provisions set forth in this Attachment 3.

2.1.1 Interconnection by one Party at the premises of the other Party.

2.1.2 BellSouth shall provide collocation to AT&T pursuant to the terms set forth in Attachment 4 of this Agreement, incorporated herein by this reference. AT&T may, at its option, purchase such collocation at the rates, terms, and conditions set forth in Attachment 4 of this Agreement, incorporated herein by this reference.

2.1.3 AT&T, pursuant to the prices, terms and conditions contained in Exhibit B to this Attachment, incorporated herein by this reference, may permit BellSouth to utilize space and power in AT&T facilities specified by AT&T solely for the purpose of terminating BellSouth's local traffic. BellSouth may request installation of both cable and equipment, or cable only.

2.1.4 Leased Facilities – where the Party requesting interconnection utilizes the facilities offered by the other Party. Such leased facilities shall be provided at the rates, terms, and conditions set forth in this Attachment 3. At AT&T's request, it may lease separate facilities for the sole purpose of delivering undipped 8YY traffic from AT&T's end users to BellSouth's Switching Services Port ("SSP") for dipping into BellSouth's toll free database.

2.1.5 Third Party Facilities – where the Party requesting interconnection utilizes the facilities provided by a source other than the Parties to this Agreement. The Party utilizing this option shall comply with industry standards to maintain network integrity and will be solely responsible for any charges or fees assessed by the third party for use of its facilities.

2.1.6 Commercial Intra-building Interconnection – where both Parties have constructed broadband facilities into a commercial building (i.e., a building that is not a telephone central office) and agree to establish a Point of Interface at such location utilizing intra-building cable.

2.1.7 Fiber Meet - where the Parties physically interconnect their networks via an optical fiber interface (as opposed to an electrical interface), at which one Party's facilities, provisioning, and maintenance responsibility begins and the other Party's responsibility ends (i.e., Point of Interface). A Fiber Meet shall be an arrangement as set forth in Section 2.3 of this Attachment 3.

2.1.8 Any other method determined to be technically feasible and requested by AT&T shall be done pursuant to the process defined in Attachment 14 of this Agreement, incorporated herein by this reference. Any other method determined to be technically feasible and requested by BellSouth and agreed to by AT&T shall be done pursuant to [ ] **[OPEN-AT&T]**

2.2 **DISAGREE**

AT&T PROPOSAL

~~**Local Tandem Interconnection. This interconnection arrangement allows AT&T to establish a Point of Interconnection at BellSouth local tandems for: (1) the delivery of AT&T-originated local traffic transported and terminated by BellSouth to BellSouth end offices within the local calling area as defined in BellSouth's General Subscriber Services Tariff, Section A3 served by those BellSouth local tandems; and (2) for local transit traffic transported by BellSouth for third party network providers who have also**~~

~~**established Points of Interconnection at those BellSouth local tandems.**~~

BST PROPOSAL

Local Tandem Interconnection. This interconnection arrangement allows AT&T to establish a Point of Interconnection at BellSouth local tandems for: (1) the delivery of AT&T-originated local traffic transported and terminated by BellSouth to BellSouth end offices within the local calling area as defined in BellSouth's General Subscriber Services Tariff, Section A3 served by those BellSouth local tandems; and (2) for local transit traffic transported by BellSouth for third party network providers who have also established Points of Interconnection at those BellSouth local tandems.

2.2.1 **DISAGREE**

AT&T PROPOSAL

When a specified local calling area is served by more than one BellSouth local tandem, AT&T must designate a "home" local tandem for each of its assigned NPA/NXXs and establish trunk connections to such local tandems. Additionally, AT&T may choose to establish a Point of Interconnection at the BellSouth local tandems where it has no codes homing but is not required to do so. ~~**AT&T may deliver local traffic to a "home" BellSouth local tandem that is destined for other BellSouth or third party network provider end offices subtending other BellSouth local tandems in the same local calling area where AT&T does not choose to establish a Point of Interconnection.**~~ It is AT&T's responsibility to enter its own NPA/NXX local tandem homing arrangements into the LERG either directly or via a vendor in order for other third party network providers to determine appropriate traffic routing to AT&T's codes. Likewise, AT&T shall obtain its routing information from the LERG.

BST PROPOSAL

When a specified local calling area is served by more than one BellSouth local tandem, AT&T must designate a "home" local tandem for each of its assigned NPA/NXXs and establish trunk connections to such local tandems. Additionally, AT&T may choose to establish a Point of Interconnection at the BellSouth local tandems where it has no codes homing but is not required to do so. **AT&T may deliver local traffic to a "home" BellSouth local tandem that is destined for other BellSouth or third party network provider end offices subtending other BellSouth local tandems in the same local**

calling area where AT&T does not choose to establish a Point of Interconnection. It is AT&T's responsibility to enter its own NPA/NXX local tandem horning arrangements into the LERG either directly or via a vendor in order for other third party network providers to determine appropriate traffic routing to AT&T's codes. Likewise, AT&T shall obtain its routing information from the LERG.

2.2.2 Notwithstanding establishing Points of Interconnection to BellSouth's local tandems, AT&T must also establish Points of Interconnection to BellSouth access tandems within the LATA on which AT&T has NPA/NXX's homed for the delivery of Interexchange Carrier Switched Access ("SWA") and toll traffic, and traffic to Type 2A CMRS connections located at the access tandems. BellSouth cannot switch SWA traffic through more than one BellSouth access tandem. SWA, Type 2A CMRS or toll traffic routed to the local tandem in error will not be backhauled to the BellSouth access tandem for completion. (Type 2A CMRS interconnection is defined in BellSouth's General Subscriber Services Tariff, Section A35.)

2.2.3 **DISAGREE**

AT&T PROPOSAL

~~**Bell South's provisioning of local tandem interconnection assumes that AT&T has the necessary local interconnection arrangement with the other third party network providers subtending those local tandems as required by the Act.**~~

BST PROPOSAL

BellSouth's provisioning of local tandem interconnection assumes that AT&T has the necessary local interconnection arrangement with the other third party network providers subtending those local tandems as required by the Act.

2.3 Fiber Meet

2.3.1 If AT&T elects to establish a POI with BellSouth pursuant to a Fiber Meet, AT&T and BellSouth shall jointly engineer and operate a Synchronous Optical Network ("SONET") transmission system by which they shall interconnect their transmission and routing of local traffic via a facility at either the DS1, or DS3 level and shall be ordered via an Access Services Request ("ASR") in the initial phase of this offering. The Parties shall work jointly to determine the specific transmission system. The parties will work cooperatively to establish joint access to transmission overhead signals and commands for such facilities and software. However, AT&T's SONET transmission must

be compatible with BellSouth's equipment in the serving wire center. The Parties will work cooperatively in the selection of compatible transmission equipment and software. Fiber Meet will be used for the provision of two-way trunking unless otherwise agreed to by the Parties.

2.3.2 BellSouth shall, wholly at its own expense, procure, install and maintain the agreed upon SONET equipment in the BellSouth Serving Wire Center ("BSWC").

2.3.3 AT&T shall, wholly at its own expense, procure, install and maintain the agreed upon SONET equipment in the AT&T Serving Wire Center ("ASWC").

2.3.4 The parties shall mutually agree upon a Point of Interface outside of the BSWC as a Fiber Meet point and shall make all necessary preparations to receive and to allow and enable delivery of fiber optic facilities into the Point of Interface with sufficient spare length to reach the Point of Interface. A Common Language Location Identification ("CLLI") code will be established for each Point of Interface. The code established must be a building type code. All orders shall originate from the Point of Interface (i.e., Point of Interface to AT&T or Point of Interface to BellSouth).

2.3.5 The Parties shall deliver and maintain their own strands wholly at their own expense. Upon verbal request by either Party, the other Party shall allow access to the Fiber Meet entry point for maintenance purposes as promptly as possible.

2.3.6 The Parties shall jointly coordinate and undertake maintenance of the SONET transmission system. Each Party shall be responsible for maintaining the components of their own SONET transmission system.

2.3.7 Each Party will be responsible for (i) providing its own transport facilities to the Fiber Meet, and (ii) the cost to build-out its facilities to such Fiber Meet.

2.3.8 Neither Party shall charge the other for its portion of the Fiber Meet facility between the ASWC and the BSWC used exclusively for the other Party's local traffic (i.e., the Local Channel). The Parties do not intend to utilize this arrangement for transit traffic.

3 INTERCONNECTION TRUNKING AND ROUTING

3.1 The parties will establish separate trunk groups as follows:

3.1.1 Local Traffic trunk groups will be established to carry combined local and intraLATA toll traffic. Local traffic means traffic that is originated by

an end user of one Party and terminates to an end user of the other Party within a given LATA. Unless the Parties mutually agree otherwise, Local Traffic trunk groups shall be one-way terminating trunks.

3.1.2 Two-way Meet Point Traffic trunk groups will be established to carry Switched Access traffic for third-party IXC customers.

3.1.3 Two-way Transit Traffic trunk groups will be established to carry traffic between AT&T and third party CLECs or ILECs other than BellSouth. The Parties agree that Meet Point Traffic and Transit Traffic may be combined on a single trunk group at AT&T's request.

3.1.4 At AT&T's request, one-way Meet Point Traffic trunks will be established by the Parties to enable AT&T to deliver undipped 8YY traffic from AT&T Customers to the LEC SSP for dipping in the Industry Toll Free Data Base. All originating toll free service calls for which AT&T requests that the BellSouth perform the SSP function (e.g., perform the database query) shall be delivered to BellSouth, using an agreed upon signaling format. This can be either GR-394-CORE format with Carrier Code "0110" and Circuit Code of "08" or GR-317-CORE format. Charges for dipping and transport to the IXC will be billed in accordance with MECOD/MECAB guidelines.

3.1.5 Special use trunks (e.g., 911, choke) will be established in accordance with this Section [ ].

3.2 The Parties will convert all existing interconnection arrangements and trunks to the interconnection arrangements described in this Attachment in accordance with the following:

3.2.1 **Within 45 days of the Effective Date, the Parties will mutually develop an operations plan based on sound engineering and operations principles, which will specify the guidelines to convert from the existing interconnection arrangements to the interconnection arrangements described in this Attachment 3. Such guidelines will conform to standard industry practices adopted by and contained in documents published by Industry Forums, including but not limited to, the Alliance for Telecommunications Industry Solutions ("ATIS") and the Ordering and Billing Forum ("OBF").**

3.2.2 **Each Party shall bear its own costs to convert from the existing interconnection arrangements to the interconnection arrangements described in this Attachment.**

3.2.3 **Unless otherwise mutually agreed, the Parties will complete the conversion within one (1) year of the Effective Date of the Agreement.**

3.2.4 **If, following one (1) year after the Effective Date of the Agreement, there exists any interconnection trunks which have not been converted to the interconnection arrangements described in this Attachment 3, then either Party may invoke the dispute resolution process, pursuant to Section 16 of the General Terms and Conditions of this Agreement, incorporated herein by this reference. [OPEN-BST/AT&T]**

3.3 The Parties will use the following interconnection standards:

3.3.1 The Parties agree to establish Binary 8 Zero Sum Extended Superframe line protocol, where technically feasible.

3.3.2 In those cases where either Party's equipment will not support 64K Clear Channel Capability ("CCC"), the Parties agree to establish AMI line coding. Any AMI line coding will be Superframe formatted. DS3 facilities will be provisioned with C-bit parity.

3.3.3 Where additional equipment is required, such equipment shall be obtained, engineered, and installed to support 64K CCC trunks.

3.3.4 All interconnection facilities between the Parties will be sized according to mutual forecasts developed per the requirements of Section 4.8 of this Attachment 3 and sound engineering practices.

3.3.5 Interconnection will be provided utilizing either a DS1 or DS3 interface or, with the mutual agreement of the Parties, another technically feasible interface (e.g., STS-1).

3.3.6 BellSouth and AT&T shall establish interconnecting trunk groups and trunking configurations between networks including the establishment of one-way or two-way trunks, in accordance with Exhibits C and D of this Attachment, incorporated herein by reference.

3.3.7 All terms and conditions, as well as charges, both non-recurring and recurring, associated with interconnecting trunk groups between BellSouth and AT&T not addressed in Exhibit A shall be as set forth in the appropriate Party's intrastate or interstate tariff for switched access services. For two-way trunking that carries the Parties' local and intraLATA toll traffic, excluding transit traffic, the Parties shall be compensated for the nonrecurring and recurring charges for trunks and DS1 facilities at 50% of the applicable contractual or tariff rates for

the services provided by each Party. AT&T shall be responsible for ordering and paying for any two-way trunks carrying transit traffic.

3.4 All originating toll free service calls for which the end office Party performs the SSP function, if delivered to the tandem Party, shall be delivered by the end office Party using GR-394 CORE format for IXC bound calls, or using GR-317-CORE format for LEC bound calls.

3.5 **Originating Feature Group B calls delivered to either Party's tandem shall use GR-317-CORE signaling format unless the associated FGB carrier employs GR-394-CORE signaling for its FGB traffic at the serving access tandem. [OPEN-BST]**

3.6 The Parties shall deliver over any trunk groups groomed for a specific access tandem only traffic destined for those publicly-dialable NPA NXX codes served by: (1) end offices that directly subtend the access tandem; and (2) those providers (including, but not limited to CMRS providers, other independent LECs, and CLECs) that directly connect to the access tandem.

3.7 For BellSouth end offices that do not normally subtend tandem for which calls are routed to that end office on an alternate routing basis, BellSouth will provide AT&T its alternative routing (scheme) arrangements. Where BellSouth utilizes alternative arrangements, it shall deliver any traffic through that alternative routing.

3.8 The Parties shall deliver over any trunk groups groomed for a specific end office only traffic destined for those publicly-dialable NPA NXX codes served by that end office, unless otherwise agreed to by the Parties.

3.9 The source for the routing information for all traffic shall be the LERG, unless otherwise agreed to between the Parties.

3.10 Where either Party delivers over the local traffic trunk groups miscellaneous calls (e.g., time, weather, 976) destined for the other Party, it shall deliver such traffic in accordance with the serving arrangements defined in the LERG.

3.11 The Parties will cooperate to establish separate, choke trunk groups for the completion of calls to end users such as radio contest lines. Notwithstanding the foregoing, the Parties agree that where the Parties' switch has the capability to perform call gapping and other protective network traffic management controls, separate trunk groups shall not be required to carry such traffic.

3.12 N11 code traffic shall be routed between the Parties' networks pursuant to accepted industry practice (e.g., over local traffic trunks or over separate trunk groups).

3.13 Each Party shall establish procedures whereby its operator bureau will coordinate with the operator bureau of the other Party in order to provide Busy Line Verification/Busy Line Verification Interrupt services on calls between their respective line side end users for numbers that are not ported.

3.14 A blocking standard of one-half of one percent (.005) shall be maintained during the average busy hour for final trunk groups carrying jointly provided exchange access traffic between an end office and an access tandem. All other final trunk groups are to be engineered with a blocking standard of one percent (.01). High usage trunk groups shall be sized to an economic CCS parameter mutually agreed to by both Parties.

3.14.1 BellSouth agrees to provide upon request of AT&T, pursuant to Attachment 6 of this Agreement, traffic usage data (including, but not limited to, usage, peg and overflow counts) for each AT&T NXX subtending the BellSouth tandem to determine which AT&T traffic by NXX is being blocked.

3.14.2 Pursuant to Attachment 9, incorporated herein by this reference, BellSouth shall report to AT&T information regarding blocking of interconnection traffic.

3.15 The Parties agree to jointly manage the capacity of interconnection trunk groups to encourage the economic deployment of increasingly robust and diverse interconnection between their networks.

DISAGREE

AT&T PROPOSAL

3.16 ~~**BellSouth Access Tandem Interconnection Architectures**~~

3.16.1 ~~**BellSouth Access Tandem Interconnection provides intratandem access to subtending end offices.**~~

3.17 ~~**Preferred Trunking Interconnection**~~

3.17.1 ~~**In this interconnection architecture AT&T's originating Local and IntraLATA Toll and originating and terminating Transit Traffic is transported on a single two-way trunk group between AT&T and BellSouth access tandem(s) within a LATA. This group carries intratandem Transit Traffic between AT&T and Independent**~~

~~Companies, Interexchange Carriers, other CLECs and other network providers with which AT&T desires interconnection and has the proper contractual arrangements. This group also carries AT&T originated intertandem traffic transiting a single BellSouth access tandem destined to third party tandems such as an Independent Company tandem or other CLEC tandem. BellSouth originated Local and IntraLATA Toll traffic is transported on a single one-way trunk group terminating to AT&T. The Two-way Trunking Rules, described in this Agreement, do not apply to this architecture. Other trunk groups for operator services, directory assistance, emergency services and intercept may be established if required. The LERG should be referenced for current routing and tandem serving arrangements. The Preferred Trunking Interconnection architecture is illustrated in Exhibit C.~~

3.18 ~~One Way Trunking Interconnection~~

3.18.1 ~~In this arrangement, the Parties interconnect using two one-way trunk groups. One one-way trunk group carries AT&T-originated local and intraLATA toll traffic destined for BellSouth end-users. The other one-way trunk group carries BellSouth-originated local and intraLATA toll traffic destined for AT&T end-users. A third two-way trunk group is established for AT&T's originating and terminating Transit Traffic. This group carries intratandem Transit Traffic between AT&T and Independent Companies, Interexchange Carriers, other CLECs and other network providers with which AT&T desires interconnection and has the proper contractual arrangements. This group also carries AT&T originated intertandem traffic transiting a single BellSouth access tandem destined to third party tandems such as an Independent Company tandem or other CLEC tandem. Other trunk groups for operator services, directory assistance, emergency services and intercept may be established if required. The LERG should be referenced for current routing and tandem serving arrangements. One Way Trunking Interconnection is illustrated in Exhibit D.~~

3.19 ~~Two-Way Trunking Interconnection~~

3.19.1 ~~Two-Way Trunking Interconnection establishes one two-way trunk group to carry local and intraLATA toll traffic between AT&T and BellSouth. To establish this type of configuration, AT&T and BellSouth must agree to the Two-way Trunking Rules. In addition, a two-way transit trunk group must be established for AT&T's originating and terminating Transit Traffic. This group carries intratandem Transit Traffic between AT&T and Independent Companies, Interexchange Carriers, other CLECs~~

~~and other network providers with which AT&T desires interconnection and has the proper contractual arrangements. This group also carries AT&T originated intertandem traffic transiting a single BellSouth access tandem destined to third party tandems such as an Independent Company tandem or other CLEC tandem. Other trunk groups for operator services, directory assistance, emergency services and intercept may be established if required. The LERG should be referenced for current routing and tandem serving arrangements. Two-Way Trunk Interconnection is illustrated in Exhibit E.~~

3.20 ~~Supergroup Interconnection~~

3.20.1 ~~In the Supergroup Interconnection arrangement, the Parties Local and IntraLATA Toll and AT&T's Transit Traffic is exchanged on a single two-way trunk group between AT&T and BellSouth. AT&T and BellSouth must agree to the Two-way Trunking Rules in order to establish this architecture. This group carries intratandem Transit Traffic between AT&T and Independent Companies, Interexchange Carriers, other CLECs and other network providers with which AT&T desires interconnection and has the proper contractual arrangements. This group also carries AT&T originated intertandem traffic transiting a single BellSouth access tandem destined to third party tandems such as an Independent Company tandem or other CLEC tandem. Other trunk groups for operator services, directory assistance, emergency services and intercept may be established if required. The LERG should be referenced for current routing and tandem serving arrangements. Supergroup Interconnection is illustrated in Exhibit F.~~

3.21 ~~Two-Way Trunking Rules:~~

3.21.1 ~~AT&T will initiate two-way trunk request, and BellSouth will concur. However, two-way trunks will be jointly provisioned.~~

3.21.2 ~~The Point of Interface will be located at a mutually agreed location or point designated by BellSouth. If an agreement cannot be reached on the location of the Point of Interface, each company will establish its own Point of Interface and order one-way trunks.~~

3.21.3 ~~BellSouth and AT&T will jointly review the trunk forecast, as needed, on a periodic basis, or at least every six (6) months.~~

3.21.4 ~~AT&T will order trunks using ASR process in place for Local Interconnection after the joint planning meeting takes place between BellSouth and AT&T.~~

3.21.5 ~~BellSouth and AT&T must agree on Standard Traffic Engineering parameters that will be used in the engineering of the trunk groups.~~

3.21.6 ~~BellSouth and AT&T must agree to meet and resolve service-affecting situations in a timely manner. This contact will normally be made through the Account Team.~~

3.21.7 ~~Establishing a two-way trunk group does not preclude BellSouth or AT&T from adding one-way trunk groups within the same Local Calling Area.~~

3.21.8 ~~For technical reasons, two-way trunk groups may not be ordered to a BellSouth DMS100 Local Tandem or DMS100 End Office.~~

3.21.9 ~~BellSouth will be responsible for the installation and maintenance of its trunks and facilities to the mutually agreed Point of Interface, and AT&T will be responsible for the installation and maintenance of its trunks and facilities to the mutually agreed to Point of Interface.~~

3.22 ~~BellSouth End Office Interconnection~~

3.22.1 ~~AT&T may establish interconnection at BellSouth end offices for the delivery of AT&T originated local and intralata toll traffic destined for BellSouth end-users served by that end-office.~~

3.22.2 ~~When end office trunking is ordered by BellSouth to deliver BellSouth originated traffic to AT&T, BellSouth will provide overflow routing through BellSouth tandems consistent with how BellSouth overflows it's traffic. The overflow will be based on the homing arrangements AT&T displays in the LERG. Likewise, if AT&T interconnects to a BellSouth end office for delivery of AT&T originated traffic, AT&T will overflow the traffic through the BellSouth tandems based on the BellSouth homing arrangements shown in the LERG.~~

BST PROPOSAL

3.23 **BellSouth Access Tandem Interconnection Architectures**

3.23.1 **BellSouth Access Tandem Interconnection provides intratandem access to subtending end offices.**

3.24 **Preferred Trunking Interconnection**

3.24.1 **In this interconnection architecture AT&T's originating Local and IntraLATA Toll and originating and terminating Transit Traffic is transported on a single two-way trunk group between AT&T and BellSouth access tandem(s) within a LATA. This group carries intratandem Transit Traffic between AT&T and Independent Companies, Interexchange Carriers, other CLECs and other network providers with which AT&T desires interconnection and has the proper contractual arrangements. This group also carries AT&T originated intertandem traffic transiting a single BellSouth access tandem destined to third party tandems such as an Independent Company tandem or other CLEC tandem. BellSouth originated Local and IntraLATA Toll traffic is transported on a single one-way trunk group terminating to AT&T. The Two-way Trunking Rules, described in this Agreement, do not apply to this architecture. Other trunk groups for operator services, directory assistance, emergency services and intercept may be established if required. The LERG should be referenced for current routing and tandem serving arrangements. The Preferred Trunking Interconnection architecture is illustrated in Exhibit C.**

3.25 **One Way Trunking Interconnection**

3.25.1 **In this arrangement, the Parties interconnect using two one-way trunk groups. One one-way trunk group carries AT&T-originated local and intraLATA toll traffic destined for BellSouth end-users. The other one-way trunk group carries BellSouth-originated local and intraLATA toll traffic destined for AT&T end-users. A third two-way trunk group is established for AT&T's originating and terminating Transit Traffic. This group carries intratandem Transit Traffic between AT&T and Independent Companies, Interexchange Carriers, other CLECs and other network providers with which AT&T desires interconnection and has the proper contractual arrangements. This group also carries AT&T originated intertandem traffic transiting a single BellSouth access tandem destined to third party tandems such as an Independent Company tandem or other CLEC tandem. Other trunk groups for operator services, directory assistance, emergency services and intercept may be established if required. The LERG should be referenced for current routing and tandem serving arrangements. One Way Trunking Interconnection is illustrated in Exhibit D.**

3.26 **Two-Way Trunking Interconnection**

3.26.1 **Two-Way Trunking Interconnection establishes one two-way trunk group to carry local and intraLATA toll traffic between AT&T and BellSouth. To establish this type of configuration, AT&T and**

BellSouth must agree to the Two-way Trunking Rules. In addition, a two-way transit trunk group must be established for AT&T's originating and terminating Transit Traffic. This group carries intratandem Transit Traffic between AT&T and Independent Companies, Interexchange Carriers, other CLECs and other network providers with which AT&T desires interconnection and has the proper contractual arrangements. This group also carries AT&T originated intertandem traffic transiting a single BellSouth access tandem destined to third party tandems such as an Independent Company tandem or other CLEC tandem. Other trunk groups for operator services, directory assistance, emergency services and intercept may be established if required. The LERG should be referenced for current routing and tandem serving arrangements. Two-Way Trunk Interconnection is illustrated in Exhibit E.

3.27 **Supergroup Interconnection**

3.27.1 **In the Supergroup Interconnection arrangement, the Parties Local and IntraLATA Toll and AT&T's Transit Traffic is exchanged on a single two-way trunk group between AT&T and BellSouth. AT&T and BellSouth must agree to the Two-way Trunking Rules in order to establish this architecture. This group carries intratandem Transit Traffic between AT&T and Independent Companies, Interexchange Carriers, other CLECs and other network providers with which AT&T desires interconnection and has the proper contractual arrangements. This group also carries AT&T originated intertandem traffic transiting a single BellSouth access tandem destined to third party tandems such as an Independent Company tandem or other CLEC tandem. Other trunk groups for operator services, directory assistance, emergency services and intercept may be established if required. The LERG should be referenced for current routing and tandem serving arrangements. Supergroup Interconnection is illustrated in Exhibit F.**

3.28 **Two-Way Trunking Rules:**

3.28.1 **AT&T will initiate two-way trunk request, and BellSouth will concur. However, two-way trunks will be jointly provisioned.**

3.28.2 **The Point of Interface will be located at a mutually agreed location or point designated by BellSouth. If an agreement cannot be reached on the location of the Point of Interface, each company will establish its own Point of Interface and order one-way trunks.**

3.28.3 **BellSouth and AT&T will jointly review the trunk forecast, as needed, on a periodic basis, or at least every six (6) months.**

3.28.4 **AT&T will order trunks using ASR process in place for Local Interconnection after the joint planning meeting takes place between BellSouth and AT&T.**

3.28.5 **BellSouth and AT&T must agree on Standard Traffic Engineering parameters that will be used in the engineering of the trunk groups.**

3.28.6 **BellSouth and AT&T must agree to meet and resolve service-affecting situations in a timely manner. This contact will normally be made through the Account Team.**

3.28.7 **Establishing a two-way trunk group does not preclude BellSouth or AT&T from adding one-way trunk groups within the same Local Calling Area.**

3.28.8 **For technical reasons, two-way trunk groups may not be ordered to a BellSouth DMS100 Local Tandem or DMS100 End Office.**

3.28.9 **BellSouth will be responsible for the installation and maintenance of its trunks and facilities to the mutually agreed Point of Interface, and AT&T will be responsible for the installation and maintenance of its trunks and facilities to the mutually agreed to Point of Interface.**

3.29 **BellSouth End Office Interconnection**

3.29.1 **AT&T may establish interconnection at BellSouth end offices for the delivery of AT&T originated local and intralata toll traffic destined for BellSouth end-users served by that end-office.**

When end office trunking is ordered by BellSouth to deliver BellSouth originated traffic to AT&T, BellSouth will provide overflow routing through BellSouth tandems consistent with how BellSouth overflows it's traffic. The overflow will be based on the homing arrangements AT&T displays in the LERG. Likewise, if AT&T interconnects to a BellSouth end office for delivery of AT&T originated traffic, AT&T will overflow the traffic through the BellSouth tandems based on the BellSouth homing arrangements shown in the LERG.

4 NETWORK DESIGN AND MANAGEMENT FOR INTERCONNECTION

4.1 Network Management and Changes. Both Parties will work cooperatively with each other to install and maintain the most effective and reliable interconnected telecommunications networks, including but not limited to, the exchange of toll-free maintenance contact numbers and escalation procedures. Both Parties agree to provide public notice of changes in the information necessary for the transmission and routing of services using its local exchange facilities or networks, as well as of any other changes that would affect the interoperability of those facilities and networks.

4.2 Interconnection Technical Standards. The interconnection of all networks will be based upon accepted industry/national guidelines for transmission standards and traffic blocking criteria. Interconnecting facilities shall conform, at a minimum, to the technical specifications set forth in the applicable industry standard technical references. Signal transfer point, Signaling System 7 ("SS7") connectivity is required at each interconnection point. BellSouth will provide out-of-band signaling using Common Channel Signaling Access Capability where technically and economically feasible, in accordance with the technical specifications set forth in the applicable industry standard technical references. Facilities of each Party shall provide the necessary on-hook, off-hook answer and disconnect supervision and shall hand off calling number ID (Calling Party Number) when technically feasible.

4.3 Quality of Interconnection. The local interconnection for the transmission and routing of telephone exchange service and exchange access that each Party provides to each other will be at least equal in quality to what it provides to itself and any subsidiary or affiliate, where technically feasible, or to any other Party to which each Party provides local interconnection.

4.4 Common Channel Signaling. Both Parties will provide LEC-to-LEC Common Channel Signaling ("CCS") to each other, where available, in conjunction with all traffic in order to enable full interoperability of CLASS features and functions except for call return. All CCS signaling parameters will be provided, including automatic number identification ("ANI"), originating line information ("OLI") calling company category, charge number, etc. All privacy indicators will be honored, and each Party will cooperate with each other on the exchange of Transactional Capabilities Application Part ("TCAP") messages to facilitate full interoperability of CCS-based features between the respective networks. The Parties will provide all line information signaling parameters including, but not limited to, Calling Party Number, Charge Number (if it is different from calling party number), and originating line information ("OLI"). For terminating FGD, either Party will pass any CPN it receives from other carriers. All privacy indicators will be

honored. Where available, network signaling information such as Transit Network Selection ("TNS") parameter (SS7 environment) will be provided by the end office Party wherever such information is needed for call routing or billing. Where TNS information has not been provided by the end office Party, the tandem Party will route originating exchange access traffic to the IXC using available translations. The Parties will follow all industry Ordering and Billing Forum ("OBF") adopted guidelines pertaining to TNS codes.

4.4.1 BellSouth's Common Channel Signaling Access Service ("CCSAS") allows interconnected carriers to exchange signaling information over a communications path that is separate from the message path.

4.4.2 The transport portion of CCSAS, commonly referred to as a signaling link, is provided via dedicated 56 kbps out of band signaling connections between the AT&T signaling point of interconnection and BellSouth's signaling point of interconnection ("SPOI").

4.4.3 The network termination point where this interconnection takes place is called the Signaling Transfer Point ("STP") port termination.

4.4.4 Charges for signaling links and the STP port termination can be found in Attachment 2 of this Agreement, incorporated herein by this reference.

4.4.5 Each CCSAS signaling connection provides for two-way digital transmission at speeds in multiples of 56 kbps. The connection to BellSouth's STP pair can be made from either AT&T's signaling point ("SP"), which requires a minimum of two links, or from AT&T's STP pair, which requires a minimum of four links.

4.4.6 SS7 Interconnection will take place at STP locations that are mutually agreed to by the Parties.

4.4.7 Where CCS is not available, in-band multi-frequency signaling will be provided. In such an arrangement, each Party will outpulse the full ten-digit telephone number of the called party to the other Party with appropriate call set-up and Automatic Number Identification ("ANI") where available, at parity.

4.4.8 The Parties will provide CCS to one another, where and as available, in conjunction with access to call related databases and Service Control Points ("SCP"), including toll free databases, Line Information Database ("LIDB"), Calling Name ("CNAM"), and any other necessary databases.

4.4.9 When the Parties establish new links , each Party shall provide its own STP port termination(s) and charge the other Party for the signaling links as follows:

4.4.9.1 Where the SPOI for the signaling link is at a Fiber Meet, there shall be no compensation between the Parties for the signaling link facilities used.

4.4.9.2 Where the SPOI for the signaling link facilities is located at the BellSouth Serving Wire Center where the signaling link facilities terminates and AT&T has furnished the interconnection facility, BellSouth will pay a monthly charge equal to one half of the AT&T-provided facility charge according to BellSouth's unbundled rate element for the facility used. Rates for said interconnection facilities shall be as set forth in Exhibit A in Attachment 2, incorporated herein by this reference.

4.4.9.3 Where the SPOI for the signaling link facilities is located at the AT&T Serving Wire Center facility where the signaling link facilities terminate and BellSouth has furnished the interconnection facility, AT&T will pay a monthly charge equal to one half of the BellSouth-provided facility charge according to BellSouth's unbundled rate element for the facility used. Rates for said interconnection facilities shall be as set forth in Exhibit A in Attachment 2, incorporated herein by this reference.

4.4.9.4 Each party is responsible for all facility maintenance and provisioning on its side of the SPOI.

4.4.10 Implementation of new interconnection arrangements (as opposed to augmentation of existing arrangements), including testing of SS7 interconnection, shall be pursuant to the technical specifications set forth in the applicable industry standard technical references. Each Party will be expected to provide sufficient cooperative testing resources to ensure proper provisioning, including the ability to confirm that AT&T LERG-assigned NPA NXX codes have been opened, translated and routed accurately in all appropriate BellSouth switches. A mutually agreed test calling plan shall be conducted to ensure successful completion of originating and terminating calls.

4.5 <u>Message Screening</u>

4.5.1 BellSouth shall set message screening parameters so as to accept messages from AT&T local or tandem switching systems destined to any signaling point in the BellSouth SS7 network or any network interconnected to the BellSouth SS7 network with which the AT&T switching system has a legitimate signaling relationship.

4.5.2 BellSouth shall set message screening parameters so as to accept messages destined to/from an AT&T local or tandem switching system or to/from an AT&T Service Control Point ("SCP") from any signaling point or network interconnected to the BellSouth SS7 network with which the AT&T switching system has a legitimate signaling relationship.

4.6 STP Requirements

4.6.1 BellSouth shall provide message transfer part and Signaling Connection Control Point ("SCCP") protocol interfaces in accordance with the technical specifications set forth in the applicable industry standard technical references.

4.7 SS7 Network Interconnection

4.7.1 SS7 Network Interconnection is the interconnection of AT&T STPs and AT&T local or tandem switching systems with the BellSouth STPs. This interconnection provides connectivity that enables the exchange of SS7 messages among BellSouth switching systems and databases, AT&T local or tandem switching systems and other third-party switching systems directly connected to the BellSouth SS7 network.

4.7.2 SS7 Network Interconnection shall provide connectivity to all components of the BellSouth SS7 network. These include:

4.7.2.1 BellSouth local or tandem switching systems;

4.7.2.2 BellSouth databases; and

4.7.2.3 Other third party local or tandem switching systems.

4.7.3 The connectivity provided by SS7 Network Interconnection shall fully support the functions of BellSouth switching systems and databases and AT&T or other third-party switching systems with (note could be an A link or a D/B link direct access to the BellSouth SS7 network.

4.7.4 SS7 Network Interconnection shall provide transport for certain types of TCAP messages. If traffic is routed based on dialed or translated digits between an AT&T local switching system and a BellSouth or other third-party local switching system, either directly or via a BellSouth tandem switching system, then it is a requirement that the BellSouth SS7 network convey via SS7 Network Interconnection the TCAP messages that are necessary to provide Call Management services (Automatic Callback, Automatic Recall, and Screening List Editing) between the AT&T local STPs and the BellSouth or other third-party local switch.

4.7.5 When the capability to route messages based on Intermediate Signaling Network Identifier ("ISNI") is generally available on BellSouth STPs, the BellSouth SS7 Network shall also convey TCAP messages using SS7 Network Interconnection in similar circumstances where the BellSouth switch routes traffic based on a Carrier Identification Code ("CIC").

4.7.6 BellSouth shall offer the following SS7 Network Interconnection options to connect AT&T or AT&T-designated local or tandem switching systems or STPs to the BellSouth SS7 network:

4.7.6.1 A-link interface from AT&T local or tandem switching systems; and

4.7.6.2 D/B-link interface from AT&T STPs.

4.7.7 Each interface shall be provided by one or more sets (layers) of signaling links, as follows:

4.7.7.1 An A-link layer shall consist of two links.

4.7.7.2 A D/B-link layer shall consist of four links.

4.7.8 The Parties agree to implement intraoffice diversity for the signaling links so that no single failure of intraoffice facilities or equipment shall cause the failure of any two links in a layer connecting to a BellSouth STP.

4.7.9 Signaling Call Information. BellSouth and AT&T will send and receive 10 digits for local traffic. Additionally, BellSouth and AT&T will exchange the proper call information, i.e., originated call company number and destination call company number, CIC, and OZZ, including all proper translations for routing between networks and any information necessary for billing.

4.8 Trunk Forecasting and Servicing Requirements.

4.8.1 The Parties shall exchange technical descriptions and forecasts of their interconnection and traffic requirements in sufficient detail necessary to establish the interconnections required to assure traffic completion to and from all customers in their respective designated service areas. In order for BellSouth to provide as accurate reciprocal trunking forecasts as possible to AT&T, AT&T must timely inform BellSouth of any known or anticipated events that may affect BellSouth reciprocal trunking requirements. If AT&T refuses to provide such information, BellSouth shall provide reciprocal trunking forecasts based only on existing trunk group growth and BellSouth's annual estimated percentage of BellSouth subscriber line growth.

4.8.2 Both Parties shall meet every six months or at otherwise mutually agreeable intervals for the purpose of exchanging non-binding forecast of its traffic and volume requirements for the interconnection and Network Elements provided under this Agreement, in the form and in such detail as agreed by the Parties. The Parties agree that each forecast provided under this section shall be deemed "Confidential Information" as set forth in Section 18 of the General Terms and Conditions of this Agreement, incorporated herein by this reference.

4.8.3 The trunk forecast should include trunk requirements for all of the interconnecting trunk groups for the current year plus the next two future years. The forecast meeting between the two companies may be a face-to-face meeting, video conference or audio conference. It may be held regionally or geographically. Ideally, these forecast meetings should be held at least semi-annually, or more often if the forecast is no longer usable. Updates to a forecast or portions thereof should be made whenever the Party providing the forecast deems that the latest trunk requirements exceed the original quantities by 48 trunks or 10%, whichever is greater. Either Party should notify the other Party if they have measurements indicating that a trunk group is exceeding its designed call carrying capacity and is impacting other trunk groups in the network. Also, either Party should notify the other Party if they know of situations in which the traffic load is expected to increase significantly and thus affect the interconnecting trunk requirements as well as the trunk requirements within the other Party's network. The Parties agree that the forecast information provided under this section shall be deemed "Confidential Information" as set forth in Section 18 of the General Terms and Conditions of this Agreement, incorporated herein by this reference. Each Party shall provide a specified point of contact for planning, forecasting and trunk servicing purposes.

4.8.4 For a non-binding trunk forecast, agreement between the two Parties on the trunk quantities and the timeframe of those trunks does not imply any liability for failure to perform if the trunks are not available for use at the required time.

4.8.5 Both Parties will manage the capacity of their interconnection trunk groups. BellSouth will issue an ASR to AT&T to order changes BellSouth desires to the BellSouth interconnection trunk groups based on BellSouth's capacity assessment. AT&T will issue an ASR to BellSouth to order changes AT&T desires to the AT&T interconnection trunk groups based on AT&T's capacity assessment.

4.8.6 Either Party may issue a Trunk Group Service Request ("TGSR") to the other Party to order changes it desires to the interconnection trunk groups based on its capacity assessment. The Party receiving the

TGSR will, within ten (10) business days, respond with an ASR or an explanation of why it believes an ASR is inappropriate.

4.8.7 The Party submitting an ASR will provide complete and accurate tie down inventory assignments in typical industry bay, panel and jack format, or in such other format as the Parties agree, on each order by use of a Design Layout Record. Additional tie down information, such as span information, may be required when applicable.

4.8.8 The Parties will prepare ASRs pursuant to the industry standard guidelines of the OBF.

4.8.9 The Party provisioning the ASR will assign to the requesting Party a location code expressed in CLLI code format that will appear in the Access Customer Terminal Location Field of the ASR.

4.8.10 The standard interval used for the provisioning of additions to local interconnection trunk groups shall be no greater than ten (10) business days, for orders of fewer than ninety-six (96) DS-0 trunks. Other orders shall be determined on an individual case basis. Where feasible, either Party will expedite installation, upon the other Party's request.

4.8.11 Major projects shall be limited to those projects that require the coordination and execution of multiple orders or related activities between and among BellSouth and AT&T work groups specifically relating to: (i) the initial establishment of local interconnection trunk groups; (ii) extending service into a new area; (iii) NXX code moves; (iv) facility grooming; or (v) network rearrangements. If orders that are component pieces of a major project are submitted after project implementation has been jointly planned and coordinated, they shall be submitted with a major project reference. Several orders submitted at one time may not be classified as a major project without the consent of the submitting Party. Each Party will identify a single point of contact that will be responsible for overall coordination and management of a major project through an agreed completion point.

4.8.12 As provided herein, AT&T and BellSouth agree to exchange escalation lists which reflect contact personnel including vice president level officers. These lists shall include name, department, title, phone number, and fax number for each person. AT&T and BellSouth agree to exchange an up-to-date list promptly following changes in personnel or information.

4.9 <u>Interference or Impairment</u>

4.10 **Within three (3) business days of receipt of notification of blocking of traffic originated within the other Party's network, the Parties shall determine and begin work to implement reasonable corrective measures in a manner consistent with industry practices. [OPEN-BST]**

4.11 Local Dialing Parity

4.11.1 BellSouth and AT&T shall provide local and toll dialing parity to each other with no unreasonable dialing delays. Dialing parity shall be provided for all originating telecommunications services that require dialing to route a call. BellSouth and AT&T shall permit similarly situated telephone exchange service end users to dial the same number of digits to make a local telephone call notwithstanding the identity of the end user's or the called party's telecommunications service provider.

5 NETWORK MAINTENANCE

5.1 Outage Repair Standard

5.1.1 In the event of an outage or trouble in any arrangement, facility, or service being provided by BellSouth hereunder, BellSouth will follow procedures for isolating and clearing the outage or trouble that are no less favorable than those that apply to comparable arrangements, facilities, or services being provided by BellSouth to itself, Affiliate or any other carrier whose network is connected to that of BellSouth.

5.2 BellSouth shall provide AT&T at least sixty (60) days' advance notice of any scheduled maintenance activity which may impact AT&T's end users. Scheduled maintenance shall include, without limitation, such activities as, switch software retrofits, power tests, major equipment replacements and cable rolls. Plans for scheduled maintenance shall include, at a minimum, the following information: location and type of facilities, specific work to be performed, date and time work is scheduled to commence, work schedule to be followed, date and time work is scheduled to be completed, estimated number of work-hours for completion.

6 INTERCONNECTION COMPENSATION

6.1 Compensation for Local and IntraLATA Toll Traffic

6.1.1 Except as provided in this Attachment, the Parties shall bill each other reciprocal compensation in accordance with the standards set forth in this Agreement for all local and intraLATA toll traffic originated by one Party and terminated to the other Party. Such traffic shall be recorded

and transmitted to AT&T in accordance with Attachment 6 of this Agreement. Reciprocal compensation for the transport and termination of local and intraLATA toll traffic shall be charged at rates specified in Exhibit A of this Attachment.

6.1.2 **DISAGREE**

AT&T PROPOSAL

Where AT&T provides service to an AT&T end user using any Combinations that includes the local switching Network Element, the Parties shall adopt a "bill and keep" compensation arrangement for local and intraLATA toll traffic. Under this compensation arrangement, the terminating carrier will not charge the originating carrier for such traffic at either the appropriate end office or access tandem switch. Notwithstanding the implementation of a "bill and keep" compensation arrangement for such traffic, BellSouth will record and forward to AT&T all associated usage, as provided in Attachment 6 to this Agreement.

BST PROPOSAL

~~**Where AT&T provides service to an AT&T end user using any Combinations that includes the local switching Network Element, the Parties shall adopt a "bill and keep" compensation arrangement for local and intraLATA toll traffic. Under this compensation arrangement, the terminating carrier will not charge the originating carrier for such traffic at either the appropriate end office or access tandem switch. Notwithstanding the implementation of a "bill and keep" compensation arrangement for such traffic, BellSouth will record and forward to AT&T all associated usage, as provided in Attachment 6 to this Agreement.**~~

6.1.3 **DISAGREE**

AT&T PROPOSAL

As clarification of this definition and for reciprocal compensation, Local Traffic does include traffic that originates from or terminates to or through an enhanced service provider or information service provider. **As further clarification, Local Traffic does not include any minutes of traffic that were generated solely for the purpose of receiving reciprocal compensation and were not related to traffic routinely and ordinarily recognized within the industry to constitute local traffic as a result of a telephone call (i.e., voice or**

data traffic). ~~As further clarification, Local Traffic does not include traffic that consists of minutes of use from any end user customer that relies upon a call placed by that end user customer or on the end user customer's behalf to establish or maintain a network connection, if: (a) minutes of use to be billed are primarily associated with traffic of a type not routinely and ordinarily recognized by a reasonable person to constitute traffic as a result of a telephone call (i.e., voice or data traffic); (b) the end user customer does not control the destination of the call; and (c) the minutes of use do not serve a legitimate purpose that is unrelated to the receipt of reciprocal compensation or any other benefit that may be derived solely from establishing or maintaining the network connection.~~

BST PROPOSAL

As clarification of this definition and for reciprocal compensation, Local Traffic does **not** include traffic that originates from or is directed to or through an enhanced service provider or information service provider. **As further clarification, Local Traffic does not include traffic that consists of minutes of use from any end user customer that relies upon a call placed by that end user customer or on the end user customer's behalf to establish or maintain a network connection, if: (a) minutes of use to be billed are primarily associated with traffic of a type not routinely and ordinarily recognized by a reasonable person to constitute traffic as a result of a telephone call (i.e., voice or data traffic); (b) the end user customer does not control the destination of the call; and (c) the minutes of use do not serve a legitimate purpose that is unrelated to the receipt of reciprocal compensation or any other benefit that may be derived solely from establishing or maintaining the network connection.**

6.1.4 **DISAGREE**

AT&T PROPOSAL

Each Party is financially responsible for providing, on its side of the POI, the facilities on which the Local Traffic trunks carrying such Party's local and intraLATA toll traffic are provisioned. ~~The Parties shall provide for the mutual and reciprocal recovery of the costs for the network facilities utilized in transporting and terminating local traffic on each other's network. The Parties agree that charges for transport and termination of calls on their respective networks are as set forth in Exhibit A to this Attachment.~~

BST PROPOSAL

The Parties shall provide for the mutual and reciprocal recovery of the costs for the network facilities utilized in transporting and terminating local traffic on each other's network. The Parties agree that charges for transport and termination of calls on their respective networks are as set forth in Exhibit A to this Attachment.

6.1.5 For the purposes of this Attachment 3, Common (Shared) Transport is defined as the transport of one Party's traffic by the other Party over the other Party's common (shared) facilities between the other Party's tandem switch and end office switch and/or between the other Party's tandem switches.

6.1.6 For the purposes of this Attachment 3, Tandem Switching is defined as the function that establishes a communications path between two switching offices through a third switching office (the Tandem switch).

6.1.7 For the purposes of this Attachment 3, End Office Switching is defined as the function that establishes a communications path between the trunk side and line side of the End Office switch.

6.1.8 **DISAGREE**

AT&T PROPOSAL

~~**If AT&T utilizes a switch outside the LATA and BellSouth chooses to purchase dedicated or common (shared) transport from AT&T for transport and termination of BellSouth originated traffic, BellSouth will pay AT&T no more than the airline miles between the V & H coordinates of the Point of Interface within the LATA where AT&T receives the BellSouth-originated traffic and the V & H coordinates of the BellSouth Exchange Rate Center Area that the AT&T terminating NPA/NXX is associated in the same LATA. For these situations, BellSouth will compensate AT&T at either dedicated or common (shared) transport rates specified in Exhibit A and based upon the network facilities provided by AT&T as defined in this Attachment 3.**~~

BST PROPOSAL

If AT&T utilizes a switch outside the LATA and BellSouth chooses to purchase dedicated or common (shared) transport from AT&T for transport and termination of BellSouth originated traffic, BellSouth will pay AT&T no more than the airline miles between the V & H coordinates of the Point of Interface within the LATA

where AT&T receives the BellSouth-originated traffic and the V & H coordinates of the BellSouth Exchange Rate Center Area that the AT&T terminating NPA/NXX is associated in the same LATA. For these situations, BellSouth will compensate AT&T at either dedicated or common (shared) transport rates specified in Exhibit A and based upon the network facilities provided by AT&T as defined in this Attachment 3.

6.1.9 **DISAGREE**

AT&T PROPOSAL

~~**Neither Party shall represent access services traffic (e.g., Internet Protocol Telephony, FGA, FGB, etc.) as Local Traffic for purposes of payment of reciprocal compensation. "Internet Protocol Telephony" is defined as real-time voice conversations over the Internet by converting voices into data which is compressed and split into packets, which are sent over the Internet like any other packets and reassembled as audio output at the receiving end.**~~

BST PROPOSAL

Neither Party shall represent access services traffic (e.g., Internet Protocol Telephony, FGA, FGB, etc.) as Local Traffic for purposes of payment of reciprocal compensation. "Internet Protocol Telephony" is defined as real-time voice conversations over the Internet by converting voices into data which is compressed and split into packets, which are sent over the Internet like any other packets and reassembled as audio output at the receiving end.

6.1.10 **<u>Unidentifiable traffic</u>. AT&T shall utilize its NPA/NXXs in such a way and will provide the necessary information so that BellSouth shall be able to distinguish local from intraLATA toll traffic for BellSouth originated traffic. AT&T end users assigned NPA/NXX line numbers shall be physically located in the BellSouth rate center with which the NPA/NXX has been associated. Whenever BellSouth delivers traffic to AT&T for termination on the AT&T's network, if BellSouth cannot determine, because of the manner in which AT&T has utilized its NXX codes whether the traffic is local or toll, BellSouth will charge the applicable rates for originating intrastate network access service as reflected in BellSouth's Intrastate Access Services Tariff. BellSouth will make appropriate billing adjustments if AT&T can provide sufficient information for BellSouth to determine whether said traffic is local or toll. [OPEN-AT&T/BST]**

6.1.11 **DISAGREE**

AT&T PROPOSAL

Percent Local Use. Each Party will report to the other a Percentage Local Usage ("PLU"). The application of the PLU will determine the amount of local minutes to be billed to the other Party. For purposes of developing the PLU, each Party shall consider every local call and every long distance call, excluding intermediary traffic. **BellSouth shall report quarterly PLU factors to AT&T. BellSouth will continue to accept from AT&T the current monthly PLU factors provided under the previous agreement. Such monthly PLU factors will continue for a period of twelve (12) months from the date of this Agreement. At the end of the twelve (12) month period, AT&T will begin to provide quarterly PLU factors, beginning with the quarter immediately following the anniversary date, unless AT&T asserts that the monthly reporting demonstrates that the PLU has not stabilized, in which case AT&T will continue to provide monthly PLU factors for an additional six (6) month period or until the Parties agree that the PLU has stabilized, whichever occurs first. For the remainder of the period covered by this Agreement, AT&T will report quarterly factors** by the first of January, April, July and September of each year. BellSouth and AT&T shall **also** provide a positive report updating the PLU. Detailed requirements associated with PLU reporting shall be as set forth in BellSouth's Standard Percent Local Use Reporting Platform for Interconnection Purchasers, as it is amended from time to time during this Agreement. Notwithstanding the foregoing, where the terminating company has message recording technology that identifies the traffic terminated, such information, in lieu of the PLU factor, shall at the company's option be utilized to determine the appropriate reciprocal compensation to be paid.

BST PROPOSAL

Percent Local Use. Each Party will report to the other a Percentage Local Usage ("PLU"). The application of the PLU will determine the amount of local minutes to be billed to the other Party. For purposes of developing the PLU, each Party shall consider every local call and every long distance call, excluding intermediary traffic. By the first of **January, April, July and October of each year,** BellSouth and AT&T shall provide a positive report updating the PLU. **BellSouth will accept and implement a monthly PLU, for a period of twelve (12) months, whenever AT&T opens a new calling area or begins marketing local services in a new area. After reporting the PLU monthly for a twelve (12) month period, the PLU reporting will**

revert to quarterly. Unless the monthly reporting demonstrates that the PLU has stabilized. The reporting Party will continue to report a monthly PLU for an additional six (6) month period or until the Parties agree that the PLU has stabilized, whichever occurs first. In all other instances, the PLY reporting shall be quarterly. Detailed requirements associated with PLU reporting shall be as set forth in BellSouth's Standard Percent Local Use Reporting Platform for Interconnection Purchasers, as it is amended from time to time during this Agreement. Notwithstanding the foregoing, where the terminating company has message recording technology that identifies the traffic terminated, such information, in lieu of the PLU factor, shall at the company's option be utilized to determine the appropriate reciprocal compensation to be paid.

6.1.12 Percentage Interstate Usage. For combined interstate and intrastate AT&T traffic terminated by BellSouth over the same facilities, AT&T will be required to provide a projected Percentage Interstate Usage ("PIU") to BellSouth. All jurisdictional report requirements, rules and regulations for Interexchange Carriers specified in BellSouth's Intrastate Access Services Tariff will apply to AT&T. After interstate and intrastate traffic percentages have been determined by use of PIU procedures, the PLU factor will be used for application and billing of local interconnection. Notwithstanding the foregoing, where the terminating company has message recording technology that identifies the traffic terminated, such information, in lieu of the PLU factor, shall at the company's option be utilized to determine the appropriate reciprocal compensation to be paid.

6.1.13 Audits. On thirty (30) days written notice, each Party must provide the other the ability and opportunity to conduct an annual audit of the traffic reported. BellSouth and AT&T shall retain records of call detail for a minimum of nine months from which a PLU and/or PIU can be ascertained. The audit shall be accomplished during normal business hours at an office designated by the Party being audited. Audit requests shall not be submitted more frequently than one (1) time per calendar year. Audits shall be performed by a mutually acceptable independent auditor paid for by the Party requesting the audit. The PLU and/or PIU shall be adjusted based upon the audit results and shall apply to the usage for the quarter the audit was completed, to the usage for the quarter prior to the completion of the audit, and to the usage for the two quarters following the completion of the audit. If, as a result of an audit, either Party is found to have overstated the PLU and/or PIU by twenty percentage points (20%) or more, that Party shall reimburse the auditing Party for the cost of the audit.

6.1.14 Compensation for 800 Traffic. Each Party shall compensate the other pursuant to the appropriate switched access charges, including the

database query charge as set forth in the each Party's intrastate or interstate switched access tariffs.

6.1.15 Records for 8YY Billing. Each Party will provide to the other the appropriate records necessary for billing intraLATA 8YY customers. Records required for billing end users purchasing 8YY Services shall be provided pursuant to Attachment 6 of this Agreement, incorporated herein by this reference.

6.1.16 **DISAGREE**

AT&T PROPOSAL

Transit Traffic Service. "Transit Traffic" means all intraLATA traffic that originates from or terminates to AT&T end users that is terminated or originated by a third-party telecommunications carrier (including another ILEC, CMRS or another CLEC) and uses transit services (which include tandem switching, or transport) provided by BellSouth. Transit traffic does not include traffic originating from or terminating to AT&T end users utilizing resold BellSouth services. For Transit Traffic that is originated by AT&T (or for which AT&T would otherwise pay reciprocal compensation to BellSouth if they were terminated or originated by the BellSouth and not by the third-party telecommunications carrier), AT&T shall compensate BellSouth for providing transit services pursuant Exhibit A to this Attachment 3. AT&T shall be responsible for dealing directly with third-party telecommunications carriers regarding compensation for call origination and termination.

BST PROPOSAL

Transit Traffic Service. BellSouth shall provide tandem switching and transport services for AT&T's transit traffic. Transit traffic is traffic originating on AT&T's network that is switched and/or transported by BellSouth and delivered to a third party's network, or traffic originating on a third Party's network that is switched and/or transported by BellSouth and delivered to AT&T's network. Rates for local transit traffic shall be the applicable call transport and termination charges as set forth in Exhibit A to this Attachment. Rates for intraLATA toll and Switched Access transit traffic shall be the applicable call transport and termination charges as set forth in BellSouth Interstate or Intrastate Switched Access tariffs. Switched Access transit traffic presumes that AT&T's end office is subtending the BellSouth Access Tandem for switched access traffic to and from AT&T's end users utilizing

BellSouth facilities, either by direct trunks with the IXC, or via the BellSouth Access Tandem. Billing associated with all transit traffic shall be pursuant to MECAB procedures. Wireless Type 1 traffic shall not be treated as transit traffic from a routing or billing perspective. Wireless Type 2A traffic shall not be treated as transit traffic from a routing or billing perspective until BellSouth and the Wireless carrier have the capability to properly meet-point-bill in accordance with Multiple Exchange Carrier Access Billing (MECAB) guidelines.

6.1.17 Rates for using interfaces to OSS – To the extent AT&T orders Services and Elements for the purpose of interconnection with BellSouth, the rates set forth in Exhibit A of Attachment 2, incorporated herein by this reference, shall apply.

DESCRIPTION	USOC	BS PROPOSED	AT&T PROPOSED
LOCAL INTERCONNECTION (CALL TRANSPORT AND TERMINATION)			
End Office Switching, per mou		$0.0017	$0.0017
Tandem Switching, per mou		$0.0009	$0.0009
Common (Shared) Transport			
Common (Shared) Transport per mile per mou		$0.00001	$0.00001
Common (Shared) Transport Facilities Termination per mou		$0.00034	$0.00034
INTEROFFICE TRANSMISSION			
Interoffice Transport - All Dedicated Transport Listed Below NRC - Tariff Service to UNE		TBD	TBD
Interoffice Transport - Dedicated - VG			
Interoffice Transport - Dedicated - 2-Wire VG - per mile	1L5XX	$0.0282	$0.0282
Interoffice Transport - Dedicated - 2-Wire VG - facilities termination per month	1L5XX	$18.00	$18.00
NRC - Connect 1st	1L5XX	$137.48	$137.48
NRC - Connect Add'l	1L5XX	$52.58	$52.58
NRC - Manual Service Order - First	1L5XX	$175.55	$175.55
NRC -Manual Service Order - Add'l	1L5XX	$90.65	$90.65
Interoffice Transport - Dedicated - DS0 - 56/64 KBPS			
Interoffice Transport - Dedicated - DS0 - per mile per month	1L5XX	$0.0282	$0.0282
Interoffice Transport - Dedicated - DS0 - facilities termination per month	1L5XX	$17.40	$17.40
NRC - Connect 1st	1L5XX	$137.48	$137.48
NRC - Connect Add'l	1L5XX	$52.58	$52.58
NRC - Manual Service Order - First	1L5XX	$175.55	$175.55
NRC -Manual Service Order - Add'l	1L5XX	$90.65	$90.65
Interoffice Transport - Dedicated - DS1			
Interoffice Transport - Dedicated - DS1 - per mile per month	1L5XX	$0.5753	$0.5753
Interoffice Transport - Dedicated - DS1 - facilities termination per month	1L5XX	$71.29	$71.29
NRC - Connect 1st	1L5XX	$217.17	$217.17
NRC - Connect Add'l	1L5XX	$163.75	$163.75
NRC - Manual Service Order - First	1L5XX	$255.24	$255.24
NRC -Manual Service Order - Add'l	1L5XX	$201.82	$201.82
NRC - Interoffice Transport - Subsequent Trunk Activation, DS1 and DS3		TBD	TBD
Interoffice Transport - Dedicated - DS3			
Interoffice Transport - Dedicated - DS3 - per mile per month	1L5XX	TBD	TBD
Interoffice Transport - Dedicated - DS3 - facilities termination per month	1L5XX	TBD	TBD
NRC - 1st	1L5XX	TBD	TBD
NRC - Add'l	1L5XX	TBD	TBD
NRC - Manual Service Order - First	1L5XX	TBD	TBD

NRC -Manual Service Order - Add'l	1L5XX	TBD	TBD
Local Channel - Dedicated			
Local Channel - All Dedicated Local Channels NRC - Tariff Service to UNE	N/A	TBD	TBD
Local Channel - Dedicated - 2-Wire VG	N/A	$14.82	$14.82
NRC - Connect 1st	N/A	$553.80	$553.80
NRC - Connect Add'l	N/A	$89.69	$89.69
NRC - Manual Service Order - First	N/A	$595.97	$595.97
NRC -Manual Service Order - Add'l	N/A	$102.45	$102.45
Local Channel - Dedicated - 4-Wire VG	N/A	$15.87	$15.87
NRC - Connect 1st	N/A	$562.23	$562.23
NRC - Connect Add'l	N/A	$92.67	$92.67
NRC - Manual Service Order - First	N/A	$604.40	$604.40
NRC -Manual Service Order - Add'l	N/A	$464.46	$464.46
Local Channel - Dedicated - DS1	N/A	$35.68	$35.68
NRC - Connect 1st	N/A	$534.48	$534.48
NRC - Connect Add'l	N/A	$462.69	$462.69
NRC - Manual Service Order - First	N/A	$620.63	$620.63
NRC -Manual Service Order - Add'l	N/A	$464.46	$464.46
Local Channel - Dedicated – DS3	N/A	$498.87	$498.87
NRC - Connect 1st	N/A	$562.25	$562.25
NRC - Connect Add'l	N/A	$527.88	$527.88
NRC - Manual Service Order - First	N/A	$618.50	$618.50
NRC -Manual Service Order - Add'l	N/A	$584.13	$584.13
Local Channel with Interoffice Transmission - Dedicated			
2-W VG Local Channel with DS1 Interoffice Transport - Dedicated			
Local Channel - Dedicated - 2-Wire Voice Grade		TBD	TBD
Interoffice Transport - Dedicated - DS1 - per mile		TBD	TBD
Interoffice Transport - Dedicated - DS1 - per facility termination		TBD	TBD
Interoffice Transport - Dedicated DS1 System		TBD	TBD
Interoffice Transport - Voice Grade Plug-in		TBD	TBD
NRC - 1st		TBD	TBD
NRC - Add'l		TBD	TBD
NRC - Manual Service Order - First		TBD	TBD
NRC -Manual Service Order - Add'l		TBD	TBD
4-W VG Local Channel with DS1 Interoffice Transport - Dedicated			
Local Channel - Dedicated - 4-Wire Voice Grade		TBD	TBD
Interoffice Transport - Dedicated - DS1 - per mile		TBD	TBD
Interoffice Transport - Dedicated - DS1 - per facility termination		TBD	TBD

Interoffice Transport - Dedicated DS1 System		TBD	TBD
Interoffice Transport - Voice Grade Plug-in		TBD	TBD
NRC - 1st		TBD	TBD
NRC - Add'l		TBD	TBD
NRC - Manual Service Order - First		TBD	TBD
NRC -Manual Service Order - Add'l		TBD	TBD
4-W DS1 Local Channel with DS3 Interoffice Transport - Dedicated			
Local Channel - Dedicated - DS1		TBD	TBD
Interoffice Transport - Dedicated - DS3 - per mile		TBD	TBD
Interoffice Transport - Dedicated - DS3 - per facility termination		TBD	TBD
Interoffice Transport - Dedicated DS3 System		TBD	TBD
Interoffice Transport - DS1 Card or W-DCS port		TBD	TBD
NRC - 1st		TBD	TBD
NRC - Add'l		TBD	TBD
NRC - Manual Service Order - First		TBD	TBD
NRC -Manual Service Order - Add'l		TBD	TBD
4-W DS1 Local Channel with DS1 Interoffice Transport - Dedicated			
Local Channel - Dedicated - DS1		TBD	TBD
Interoffice Transport - Dedicated - DS1 - per mile		TBD	TBD
Interoffice Transport - Dedicated - DS1 - per facility termination		TBD	TBD
NRC - 1st		TBD	TBD
NRC - Add'l		TBD	TBD
NRC - Manual Service Order - First		TBD	TBD
NRC -Manual Service Order - Add'l		TBD	TBD
NRC - Interoffice Transport - Subsequent Trunk Activation		TBD	TBD
DS3 Local Channel with DS3 Interoffice Transport - Dedicated			
Local Channel - Dedicated - DS3		TBD	TBD
Interoffice Transport - Dedicated - DS3 - per mile		TBD	TBD
Interoffice Transport - Dedicated - DS3 - per facility termination		TBD	TBD
NRC - 1st		TBD	TBD
NRC - Add'l		TBD	TBD
NRC - Manual Service Order - First		TBD	TBD
NRC -Manual Service Order - Add'l		TBD	TBD

NOTES:

1 If no rate is identified in the contract, the rate for the specific service or function will be as negotiated by the parties upon request by either party.

2 TBD - To be Determined in docket No. P-100, Sub 133d

AT&T PROPOSAL

SPACE LICENSE

1. **AT&T, at its sole discretion, may license BellSouth to situate BellSouth equipment in the AT&T central office and to utilize AT&T site support services in the AT&T central office such as power, heating, ventilation, air conditioning and security for such equipment, for the sole purpose of delivering interconnection traffic to AT&T for completion in accordance with Attachment 3 of this Agreement. Such licenses and site support services are referred to herein collectively as a "Space License."**

2. **The only allowable network interfaces under a Space License are DS1 and DS3.**

3. **Space Licenses are available at AT&T's sole discretion and are further subject to the availability of space and site support services in each AT&T central office. To establish a Space License, BellSouth must complete and submit a questionnaire providing requested information to support new space and site support services or to provide additional capacity for existing arrangements.**

3.1 **Among the information to be provided in the questionnaire, BellSouth must identify the quantity, manufacturer, type and model of any equipment to be installed; the quantity, type and specifications of any transmission cable to be installed (collectively "Licensed Facilities"). The space in the AT&T central office in which BellSouth's equipment is or is to be located is referred to herein as the "Equipment Space."**

3.2 **BellSouth is responsible for the installation of Licensed Facilities in accordance with AT&T's installation processes and procedures.**

3.3 **If BellSouth desires to modify its request, prior to notification from AT&T regarding availability, BellSouth may do so by requesting that AT&T cancel the original request providing a new questionnaire to AT&T to process.**

4. **Following receipt of the questionnaire, AT&T will determine whether there is sufficient AT&T central office space and site support services**

to meet the request contained in BellSouth's questionnaire. AT&T will notify BellSouth in writing whether there is sufficient AT&T central office space available for each such request.

5. Upon receiving written notification of the availability of AT&T central office space from AT&T, BellSouth will provide written verification that it still requires such AT&T central office space. This written notification is BellSouth's firm order for each AT&T central office space requested, and will constitute an executed Space License under the terms of this Exhibit.

6. The rates and charges are to be negotiated by the Parties.

7. AT&T agrees to provide site support services as follows:

7.1 AT&T will design, engineer, furnish, install, and maintain cable racks for BellSouth's use.

7.2 AT&T will design, engineer, furnish, install, and maintain a battery distribution fuse board (BDFB) from which AT&T will supply DC power to BellSouth.

7.3 AT&T will provide common use convenience outlets (120V) as required for test equipment, etc. within Equipment Space.

7.4 AT&T will maintain temperature and humidity conditions for the Equipment Space within substantially the same ranges that AT&T maintains for its own similar equipment.

8. AT&T will specify the location and dimensions of the Equipment Space and at its sole discretion will specify any physical or space separation requirements.

9. BellSouth will use the Space Licenses solely for the purpose of delivering its interconnection traffic to AT&T, so that AT&T may complete such calls in accordance with this Attachment. BellSouth agrees not to make any other use of the Space Licenses without the advance written consent of AT&T.

10. Upon reasonable advance notice and for the limited purpose of performing work for which BellSouth is responsible under this Exhibit, AT&T licenses BellSouth to enter and exit the Equipment Space through portions of the AT&T central office as designated by AT&T. Unless a service outage is occurring or appears to be imminent,

BellSouth shall perform its work in the AT&T central office during regular business hours as designated from time to time by AT&T.

11. BellSouth shall either furnish to AT&T, and keep current, a written list of all BellSouth employees and AT&T approved contractors authorized to enter the Equipment Space, or provide a twenty four (24) hour local or toll-free telephone number which AT&T can use to verify the authority of such persons. BellSouth shall also furnish to AT&T, and keep current, samples of the identifying credentials to be carried by such persons. AT&T will permit entry to the Equipment Space by persons named on such then-current lists or verified by means of the local or toll-free telephone number, and bearing such identifying credentials. Notwithstanding Part I.C.12 (General Terms & Conditions - Liability and Indemnity) of this Agreement, BellSouth hereby releases AT&T, AT&T's Affiliates and their officers, directors, employees, agents, contractors, and suppliers from liabilities arising from the acts or omissions of any such persons whom AT&T has admitted in good faith to the AT&T central office.

12. While in the AT&T central office, employees of BellSouth and its contractors must comply at all times with AT&T's security and safety procedures and requirements. AT&T may refuse entry to, or require the departure of, any person who is disorderly or who has failed to comply with AT&T's procedures and requirements after being notified of them.

13. BellSouth will be responsible for selecting its contractors and causing their compliance with this Exhibit.

14. Each party shall cause its employees and contractors to act in a careful and workmanlike manner to avoid damage to the other party's property and the property of others in and around AT&T's central office.

15. BellSouth's employees and contractors shall refrain from using any Licensed Facilities, equipment, tools, materials, or methods that, in AT&T's sole judgment, might cause damage to or otherwise interfere with AT&T's operations. AT&T reserves the right to take any reasonable action to prevent potential harm to the services, personnel, or property of AT&T (and its affiliates, vendors, and end users).

16. In addition to the Licensed Facilities, BellSouth may bring into the Equipment Space the small tools and portable test equipment needed for the work for which BellSouth is responsible. BellSouth will be

responsible for the care and safeguarding of all such items. BellSouth may not bring any other items into the AT&T central office without AT&T's prior written consent. In particular, and without limiting the foregoing, BellSouth may not bring into the AT&T central office any of the following: wet cell batteries, explosives, flammable liquids or gases, alcohol, controlled substances, weapons, cameras, tape recorders, and similar items.

17. AT&T and its designees may inspect or observe the Equipment Space, the space designated by AT&T for BellSouth transmission cable, the Licensed Facilities, and any work performed by or behalf of BellSouth in the AT&T central office, at any time. If the Equipment Space is surrounded by a security enclosure, BellSouth shall furnish AT&T with all mechanisms and information needed for entry to the Equipment Space.

18. AT&T and BellSouth intend that the Licensed Facilities, whether or not physically affixed to the AT&T central office, shall not be construed to be fixtures. BellSouth (or the lessor of BellSouth equipment, if applicable) will report the Licensed Facilities as its personal property wherever required by applicable laws, and will pay all taxes levied upon the Licensed Facilities.

19. BellSouth agrees not to sell, convey, or lease BellSouth transmission cable under any circumstances, except for a conveyance of BellSouth transmission cable to AT&T upon termination of the applicable Space License. BellSouth further agrees not to cause, suffer, or permit BellSouth transmission cable to become encumbered by a lien, trust, pledge, or security interest as a result of rights granted by BellSouth or any act or omission of BellSouth. If BellSouth transmission cable becomes so encumbered, BellSouth agrees to discharge the obligation within thirty (30) days after receiving notice of the encumbrance.

20. The licenses granted by this Agreement are non-exclusive personal privileges allowing BellSouth to situate the Licensed Facilities in the locations indicated by AT&T. These licenses and the payments by BellSouth under this Agreement do not create or vest in BellSouth (or in any other person) any property right or interest of any nature in any part of the AT&T central office.

21. The licenses granted to BellSouth under this Agreement shall be subordinate to any mortgages or deeds of trust that may now exist or may in the future be placed upon any AT&T central office; to any and all advances to be made under such mortgages or deeds of trust; and

to the interest thereon and all renewals, replacements, or extensions thereof.

22. AT&T may relocate the licensed space, or the AT&T central office, or both upon thirty (30) days prior written notice to BellSouth. If relocation of Licensed Facilities is required, the party that originally installed such Licensed Facilities will be responsible for relocating them. Any such relocation work that is AT&T's responsibility and is performed by AT&T will be without charge to BellSouth. AT&T will reimburse BellSouth for the reasonable cost of such relocation work performed by BellSouth, and AT&T will provide at its own expense any additional or replacement cable racks and BellSouth transmission cable needed to accommodate the relocation of the installation. AT&T and BellSouth will work together in good faith to minimize any disruption of service in connection with such relocation.

23. Licensed Facilities will be furnished, installed and maintained in accordance with the following:

23.1 BellSouth agrees to furnish all Licensed Facilities.

23.2 BellSouth agrees to install the Licensed Facilities. BellSouth agrees to comply with specifications and processes furnished by AT&T for installation performed by BellSouth.

23.3 BellSouth agrees to install the DC power supply and single circuit (battery and ground) from its fuse panel located in BellSouth's frame to the designated AT&T power source. BellSouth will distribute the power among its equipment within the Equipment Space.

23.4 BellSouth agrees to maintain in good working order all BellSouth equipment in Equipment Space. AT&T agrees to repair BellSouth transmission cable. BellSouth is not permitted to repair installed BellSouth transmission cable in order to avoid possible harm to other transmission cables.

23.5 BellSouth may use contractors to perform installation and maintenance for which BellSouth is responsible. AT&T consents to use of those contractors listed on a then current AT&T approved list of BellSouth submitted contractors. Use of any other contractors shall require AT&T's prior written consent, which shall not be unreasonably withheld.

23.6 BellSouth may, at its own discretion and expense, choose to install its equipment in locked cabinets, provided that space and configuration will permit such. If BellSouth chooses to install its equipment in locked cabinets, BellSouth shall leave the appropriate keys with AT&T and agrees to allow AT&T the right of entry to such cabinets.

24. Under the Space Licenses, AT&T performs no communications services, provides no goods except for short lengths of wire or cable and small parts incidental to the services furnished by AT&T, and provides no maintenance for any BellSouth equipment in Equipment Space. AT&T warrants that the services provided under this Agreement will be performed in a workmanlike manner and in accordance with AT&T technical specifications and that the incidental material provided by AT&T shall be free from defects. AT&T MAKES NO OTHER WARRANTIES, EXPRESS OR IMPLIED, AND SPECIFICALLY DISCLAIMS ANY WARRANTIES OF MERCHANTABILITY OR FITNESS FOR A PARTICULAR PURPOSE.

25. In addition to any other rights or remedies that AT&T may have under this Agreement or at law, AT&T may terminate the applicable Space License if any of the following events occurs and is not corrected within thirty (30) days after written notice to cure:

25.1 BellSouth fails to pay charges due or fails to comply with any of the terms or conditions of this Part II-G.

25.2 BellSouth fails to utilize the Licensed Facilities for the authorized purpose described in this Part II-G.

25.3 BellSouth fails to comply with applicable laws or is in any way prevented by the order or action of any court, or other governmental entity from performing any of its obligations under this Part II-G.

26. In the event that a Space License is terminated for any reason, the Parties will act in accordance with the following:

26.1 Within thirty (30) days after termination of a Space License, BellSouth will, at its sole expense, remove all BellSouth equipment in Equipment Space and restore the Equipment Space to its previous condition, normal wear and tear excepted. If BellSouth fails to complete such removal and restoration within thirty (30) days after termination of the applicable Space License,

AT&T may, at its option, upon ten (10) days written notice to BellSouth, perform the removal and restoration at BellSouth's sole risk and expense.

26.2 **Because removal of installed BellSouth transmission cable may cause damage to other cables or fiber, BellSouth agrees to relinquish its transmission cable to AT&T in lieu of removal. Upon termination of the applicable Space License, all BellSouth transmission cable will be automatically conveyed to AT&T, thereby becoming the property of AT&T, free of any interest or lien of any kind by BellSouth (or by any person claiming through BellSouth). At AT&T's request, BellSouth will promptly execute and deliver to AT&T a bill of conveyance or such other assurances as may be requisite to confirm or perfect the transfer of BellSouth transmission cable to AT&T.**

26.3 **If no monies are owed by BellSouth to AT&T under this Agreement, AT&T agrees to deliver such removed equipment to BellSouth's last known business address or to a domestic location designated by BellSouth, at BellSouth's sole risk and expense. If monies are so owed, BellSouth agrees that AT&T may either take ownership free of any interest or lien by BellSouth (or those claiming through BellSouth) or treat such equipment as abandoned by BellSouth. [OPEN – BELLSOUTH]**

BELLSOUTH PROPOSAL

SPACE LICENSE

1. **AT&T, upon reasonable request from BellSouth, may license BellSouth to situate BellSouth equipment in the AT&T central office and to utilize AT&T site support services in the AT&T central office such as power, heating, ventilation, air conditioning and security for such equipment, for the sole purpose of interconnection or for any other purpose mutually agreed to by the Parties. Such licenses and site support services are referred to herein collectively as a "Space License."**

2. **Space Licenses are available subject to the availability of space and site support services in each AT&T central office. To establish a Space License, BellSouth must complete and submit a questionnaire providing requested information to support new space and site support services or to provide additional capacity for existing arrangements.**

2.1 **Among the information to be provided in the questionnaire, BellSouth must identify the quantity, manufacturer, type and model of any equipment to be installed; the quantity, type and specifications of any transmission cable to be installed (collectively "Licensed Facilities"). The space in the AT&T central office in which BellSouth's equipment is or is to be located is referred to herein as the "Equipment Space."**

2.2 **BellSouth is responsible for the installation of Licensed Facilities in accordance with AT&T's installation processes and procedures.**

2.3 **If BellSouth desires to modify its request, prior to notification from AT&T regarding availability, BellSouth may do so by requesting that AT&T cancel the original request providing a new questionnaire to AT&T to process.**

3. **Following receipt of the questionnaire, AT&T will determine whether there is sufficient AT&T central office space and site support services to meet the request contained in BellSouth's questionnaire. AT&T will notify BellSouth in writing whether there is sufficient AT&T central office space available for each such request.**

4. **Upon receiving written notification of the availability of AT&T central**

office space from AT&T, BellSouth will provide written verification that it still requires such AT&T central office space. This written notification is BellSouth's firm order for each AT&T central office space requested, and will constitute an executed Space License under the terms of this Exhibit B.

5. The rates and charges are to be negotiated by the Parties.

6. AT&T agrees to provide site support services as follows:

6.1 AT&T will design, engineer, furnish, install, and maintain cable racks for BellSouth's use.

6.2 AT&T will design, engineer, furnish, install, and maintain a battery distribution fuse board (BDFB) from which AT&T will supply DC power to BellSouth.

6.3 AT&T will provide common use convenience outlets (120V) as required for test equipment, etc. within Equipment Space.

6.4 AT&T will maintain temperature and humidity conditions for the Equipment Space within substantially the same ranges that AT&T maintains for its own similar equipment.

7. AT&T will provide the amount of space requested by BellSouth unless AT&T reasonably determines the quantity of space requested is not available. If the amount of requested space is not available, AT&T will specify the dimensions of the Equipment Space available and will specify any physical or space separation requirements. If the amount of space requested is available, AT&T will provide the location of the space and will specify any physical or space separation requirements.

8. For the purpose of performing work for which BellSouth is responsible under this Exhibit B, AT&T licenses BellSouth to enter and exit the Equipment Space through portions of the AT&T central office as designated by AT&T. Unless a service outage is occurring or appears to be imminent, BellSouth shall perform its work in the AT&T central office during regular business hours as designated from time to time by AT&T. BellSouth and AT&T will establish contact lists and procedures for after hours entry to the AT&T central office.

9. BellSouth will provide a twenty-four (24) hour local or toll free telephone number which AT&T can use to verify the authority of such personnel to enter the Equipment Space.

10. While in the AT&T central office, employees of BellSouth and its contractors must comply at all times with AT&T's security and safety procedures and requirements. AT&T may refuse entry to, or require the departure of, any person who is disorderly or who has failed to comply with AT&T's procedures and requirements after being notified of them.

11. BellSouth will be responsible for selecting its contractors and causing their compliance with this Exhibit B.

12. Each party shall cause its employees and contractors to act in a careful and workmanlike manner to avoid damage to the other party's property and the property of others in and around AT&T's central office.

13. BellSouth's employees and contractors shall abide by the requirements of Section 5.10, Interference or Impairment, of Attachment 4, incorporated herein by this reference.

14. In addition to the Licensed Facilities, BellSouth may bring into the Equipment Space whatever tools and equipment necessary to install and maintain its equipment. BellSouth will be responsible for the care and safeguarding of all such items. BellSouth will not bring any materials or equipment into the AT&T Central Office that if would not bring into its own Premises, as Premises is defined by 47 CFR § 51.3( ) .

15. AT&T and its designees may inspect or observe the Equipment Space, the space designated by AT&T for BellSouth transmission cable, the Licensed Facilities, and any work performed by or behalf of BellSouth in the AT&T central office, at any time. If the Equipment Space is surrounded by a security enclosure, BellSouth shall furnish AT&T with all mechanisms and information needed for entry to the Equipment Space.

16. AT&T and BellSouth intend that the Licensed Facilities, whether or not physically affixed to the AT&T central office, shall not be construed to be fixtures. BellSouth (or the lessor of BellSouth equipment, if applicable) will report the Licensed Facilities as its personal property wherever required by applicable laws, and will pay all taxes levied upon the Licensed Facilities.

17. BellSouth further agrees not to cause, suffer, or permit BellSouth transmission cable to become encumbered by a lien, trust, pledge, or

security interest as a result of rights granted by BellSouth or any act or omission of BellSouth. If BellSouth transmission cable becomes so encumbered, BellSouth agrees to discharge the obligation within thirty (30) days after receiving notice of the encumbrance.

18. The licenses granted by this Agreement are non-exclusive personal privileges allowing BellSouth to situate the Licensed Facilities in the locations indicated by AT&T. These licenses and the payments by BellSouth under this Agreement do not create or vest in BellSouth (or in any other person) any property right or interest of any nature in any part of the AT&T central office.

19. The licenses granted to BellSouth under this Agreement shall be subordinate to any mortgages or deeds of trust that may now exist or may in the future be placed upon any AT&T central office; to any and all advances to be made under such mortgages or deeds of trust; and to the interest thereon and all renewals, replacements, or extensions thereof.

20. AT&T may relocate the licensed space, or the AT&T central office, or both upon thirty (30) days prior written notice to BellSouth. If relocation of Licensed Facilities is required, the party that originally installed such Licensed Facilities will be responsible for relocating them. Any such relocation work that is AT&T's responsibility and is performed by AT&T will be without charge to BellSouth. AT&T will reimburse BellSouth for the reasonable cost of such relocation work performed by BellSouth, and AT&T will provide at its own expense any additional or replacement cable racks and BellSouth transmission cable needed to accommodate the relocation of the installation. AT&T and BellSouth will work together in good faith to minimize any disruption of service in connection with such relocation.

21. Licensed Facilities will be furnished, installed and maintained in accordance with the following:

21.1 BellSouth agrees to furnish all Licensed Facilities.

21.2 BellSouth agrees to install the Licensed Facilities. BellSouth agrees to comply with specifications and processes furnished by AT&T for installation performed by BellSouth.

21.3 BellSouth agrees to install the DC power supply and single circuit (battery and ground) from its fuse panel located in BellSouth's frame to the designated AT&T power source. BellSouth will distribute the

power among its equipment within the Equipment Space.

21.4 BellSouth agrees to maintain in good working order all BellSouth equipment in Equipment Space. AT&T agrees to repair BellSouth transmission cable. BellSouth is not permitted to repair installed BellSouth transmission cable in order to avoid possible harm to other transmission cables.

21.5 BellSouth may use contractors to perform installation and maintenance for which BellSouth is responsible. AT&T consents to use of those contractors listed on a then current AT&T approved list of BellSouth submitted contractors. Use of any other contractors shall require AT&T's prior written consent, which shall not be unreasonably withheld.

21.6 BellSouth may, at its own discretion and expense, choose to install its equipment in locked cabinets, provided that space and configuration will permit such. If BellSouth chooses to install its equipment in locked cabinets, BellSouth shall leave the appropriate keys with AT&T and agrees to allow AT&T the right of entry to such cabinets.

22. Under the Space Licenses, AT&T performs no communications services, provides no goods except for short lengths of wire or cable and small parts incidental to the services furnished by AT&T, and provides no maintenance for any BellSouth equipment in Equipment Space. AT&T warrants that the services provided under this Agreement will be performed in a workmanlike manner and in accordance with AT&T technical specifications and that the incidental material provided by AT&T shall be free from defects. AT&T MAKES NO OTHER WARRANTIES, EXPRESS OR IMPLIED, AND SPECIFICALLY DISCLAIMS ANY WARRANTIES OF MERCHANTABILITY OR FITNESS FOR A PARTICULAR PURPOSE.

23. In addition to any other rights or remedies that AT&T may have under this Agreement or at law, AT&T may terminate the applicable Space License if any of the following events occurs and is not corrected within thirty (30) days after written notice to cure:

23.1 BellSouth fails to pay charges due or fails to comply with any of the terms or conditions of this Exhibit B.

23.2 BellSouth fails to comply with applicable laws or is in any way prevented by the order or action of any court, or other governmental entity from performing any of its obligations under this Part II-G.

24. In the event that a Space License is terminated for any reason, the Parties will act in accordance with the following:

24.1 Within thirty (30) days after termination of a Space License, BellSouth will, at its sole expense, remove all BellSouth equipment in Equipment Space and restore the Equipment Space to its previous condition, normal wear and tear excepted. If BellSouth fails to complete such removal and restoration within thirty (30) days after termination of the applicable Space License, AT&T may, at its option, upon ten (10) days written notice to BellSouth, perform the removal and restoration at BellSouth's sole risk and expense.

24.2 Because removal of installed BellSouth transmission cable may cause damage to other cables or fiber, BellSouth agrees to relinquish its transmission cable to AT&T in lieu of removal. Upon termination of the applicable Space License, all BellSouth transmission cable will be automatically conveyed to AT&T, thereby becoming the property of AT&T, free of any interest or lien of any kind by BellSouth (or by any person claiming through BellSouth). At AT&T's request, BellSouth will promptly execute and deliver to AT&T a bill of conveyance or such other assurances as may be requisite to confirm or perfect the transfer of BellSouth transmission cable to AT&T.

24.3 If no monies are owed by BellSouth to AT&T under this Agreement, AT&T agrees to deliver such removed equipment to BellSouth's last known business address or to a domestic location designated by BellSouth, at BellSouth's sole risk and expense.

BellSouth Proposal

Preferred Interconnection Architecture

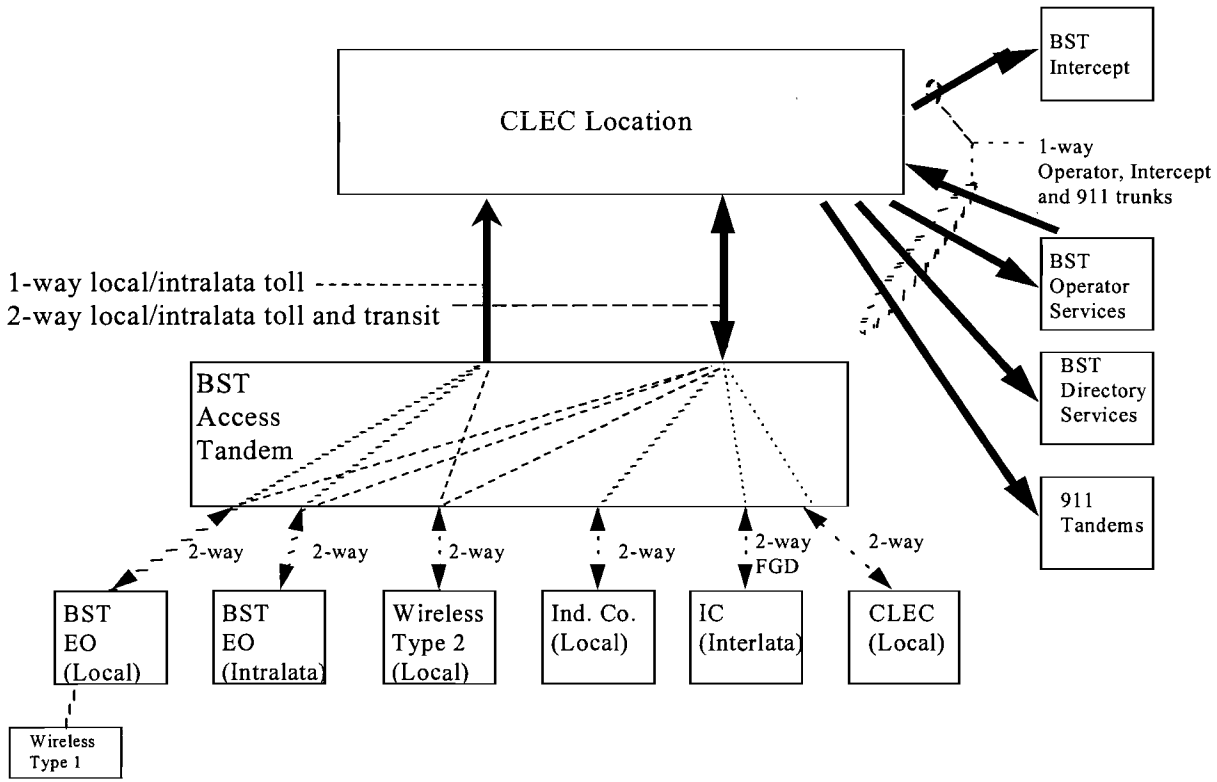

BellSouth Proposal
One Way Trunking Interconnection

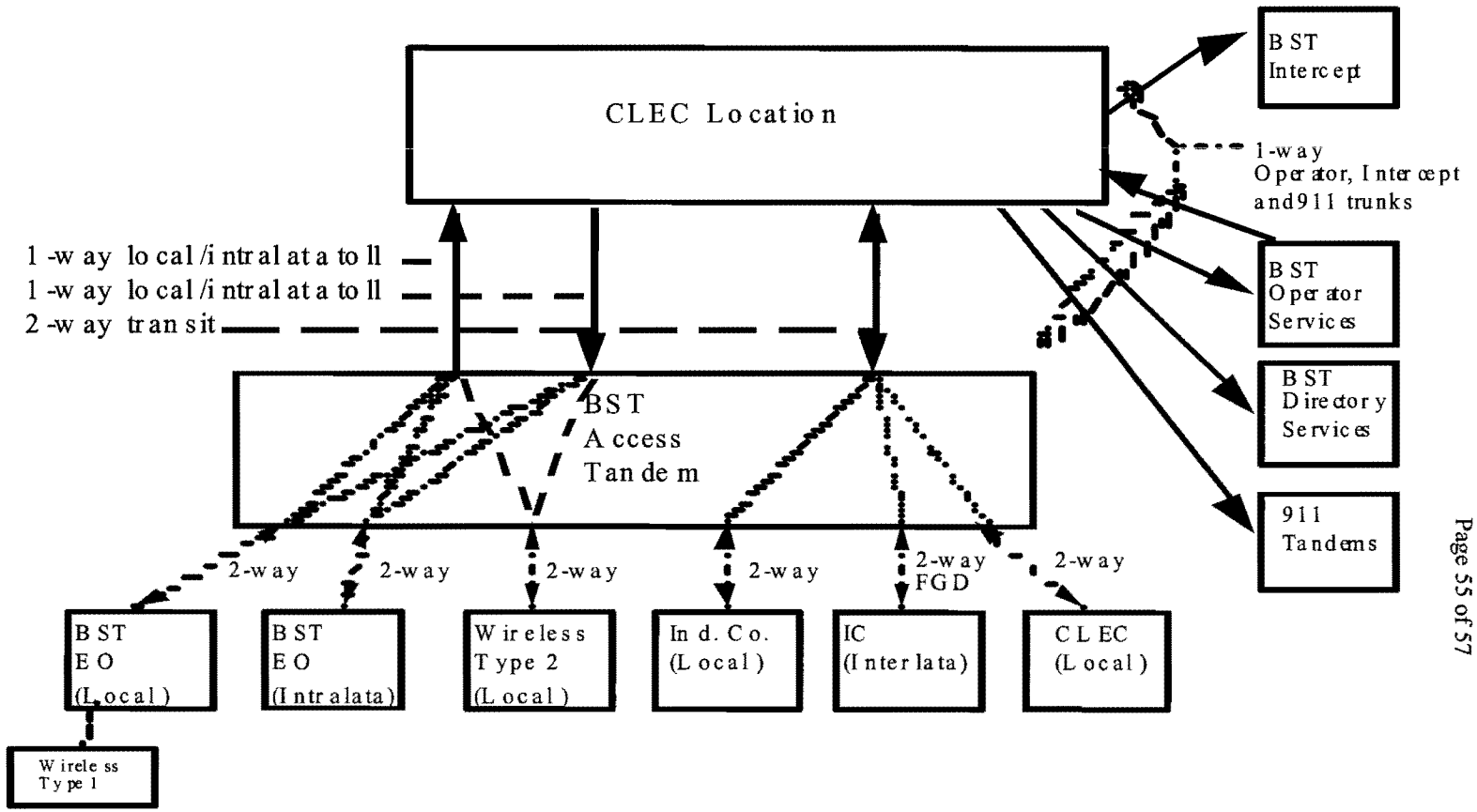

BellSouth Proposal
Two Way Trunking Interconnection

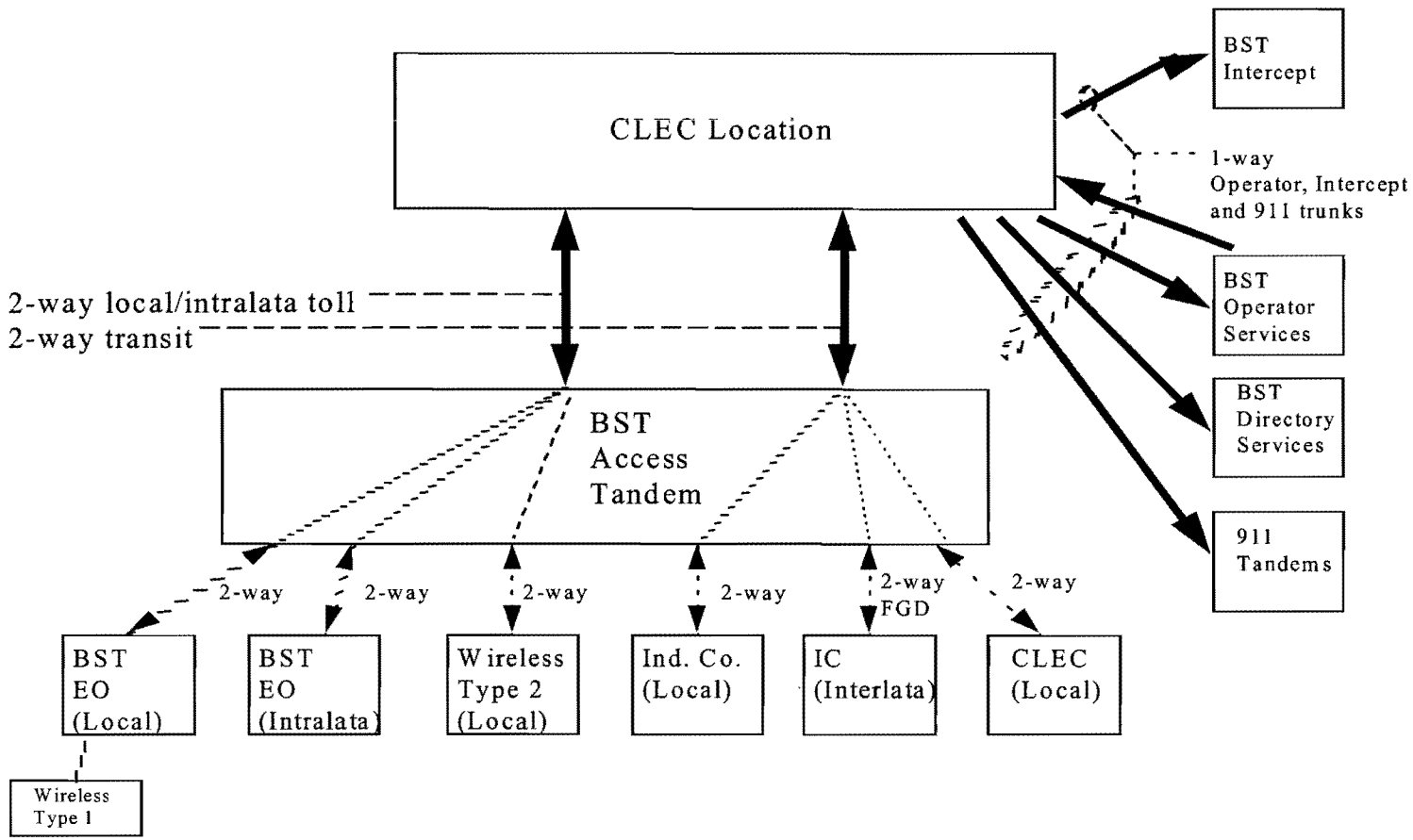

BellSouth Proposal
SuperGroup Interconnection Architecture

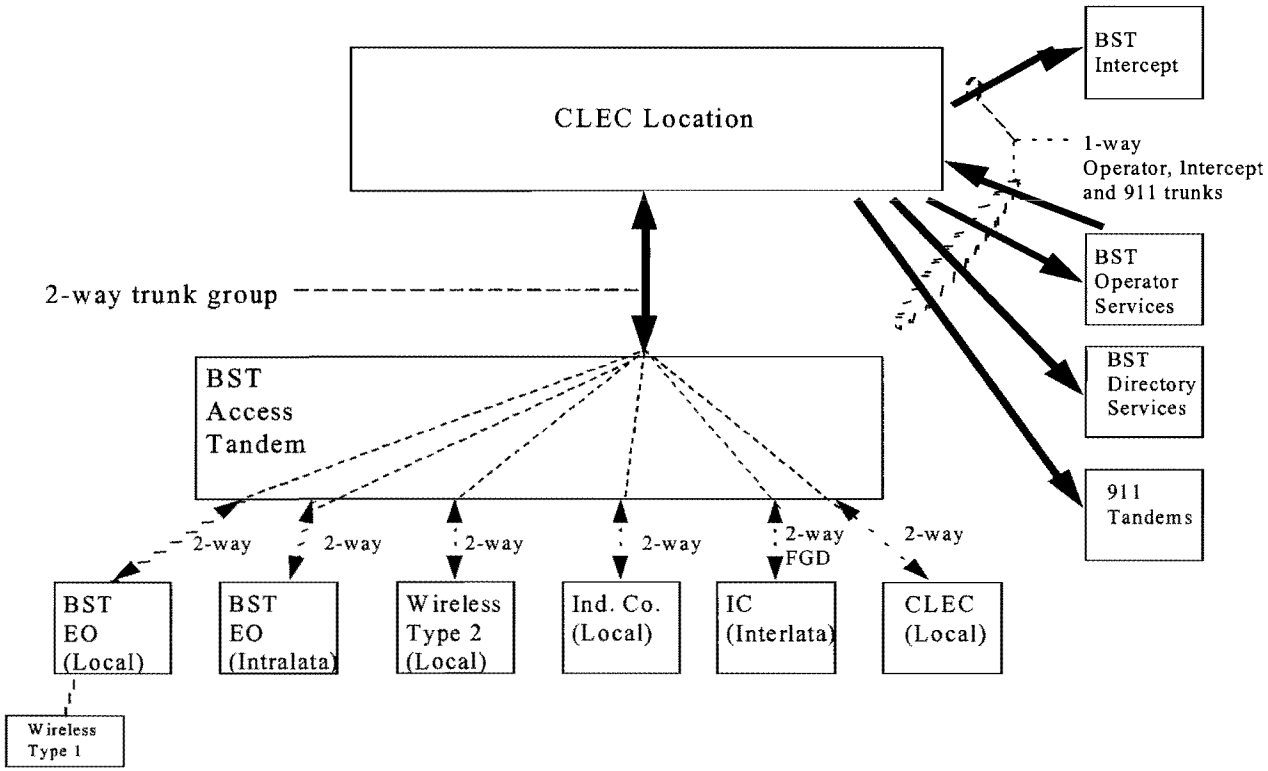

ATTACHMENT B

Florida

Issues for Arbitration between AT&T and BellSouth

	Issue	AT&T Position	BellSouth Position*
1.	Should calls to Internet service providers be treated as local traffic for the purposes of reciprocal compensation?	ISP calls should be treated as local traffic for purposes of reciprocal compensation. AT&T still incurs the cost of the ISP Traffic over its network. Additionally, such calls are treated as local under BellSouth's tariffs and the FCC has treated ISP Traffic as intrastate for jurisdictional separation purposes.	No. The FCC has definitively determined that ISP Traffic is interstate in nature. Therefore, such Traffic should not be treated as local for purposes of reciprocal compensation. The parties should track the minutes of ISP Traffic exchanged and true up the amount of compensation owed, if any, based on an effective rule promulgated by the FCC.
2.	What are the appropriate performance measurements and enforcement mechanisms that BellSouth should implement?	For AT&T to ensure its customers receive service equal in quality to that received by BellSouth customers, BellSouth must establish that it offers non-discriminatory support for total service resale, use of unbundled network elements (UNE's), and access to OSS. BellSouth should be required to provide an effective performance measurement methodology that contains: - A comprehensive set of comparative measurements that provides for disaggregation of its data to permit meaningful comparisons and full disclosure. - Business rules and calculations which reveal true performance and customer experiences. - A sound methodology for establishing benchmarks and designating appropriate retail analogs. - Statistical procedures that balance the possibility of concluding BellSouth favoritism exists when it does not with concluding there is no BellSouth favoritism when there is. - AT&T access to all the raw data that BellSouth uses for its ALEC performance reporting.	The Service Quality Measurements proposed by BellSouth incorporate all of the measurements and reporting intervals adopted by other commissions within the BellSouth region. These measurements, as well as the business rules utilized to calculate the measurements, represent a comprehensive look at the service provided to telecommunications carriers. BellSouth provides access to the raw data utilized to calculate the measurements and has worked hand in hand with AT&T and other telecommunications carriers in the development of an appropriate statistical methodology. BellSouth does not believe that the issue of appropriate, if any, enforcement mechanisms is an appropriate issue for arbitration and resolution by the FPSC. Without waiving its right to assert its legal position, BellSouth has voluntarily proposed enforcement mechanisms for inclusion in the AT&T/BellSouth Interconnection Agreement. The proposed enforcement mechanisms include the key, outcome oriented service quality measures required by state commissions in BellSouth's region and include either

*The position stated in this column is based on BellSouth's position stated in its Responses to AT&T's Petition for Arbitration filed in Georgia, Tennesee, Mississippi and North Carolina.

ATTACHMENT B

FLORIDA

Issues for Arbitration between AT&T and BellSouth

16.	What is the appropriate treatment of outbound voice calls over Internet protocol ("IP") telephony, as it pertains to reciprocal compensation? (Local Interconnection, Attachment 3, Section 6.1.9)	Until the FCC issues rules on how IP Traffic is to be treated, no restrictions should be imposed. Further, there is no way to measure and record such Traffic as requested by BellSouth. In any event, this is not a proper subject for negotiation in an interconnection agreement.	IP telephony is utilized in a manner consistent with traditional long-distance calling. Therefore, due to the increasing use of IP technology to transport voice long distance Traffic, it is important to specify in the Agreement that Voice over the Internet Protocol Traffic is switched access Traffic and not local Traffic.
17.	In calculating Percent Local Usage (PLU) for purposes of reciprocal compensation, should AT&T be allowed to report the Traffic on a monthly, rather than quarterly, basis? (Local Interconnection, Attachment 3, Section 6.1.11)	Yes. BellSouth should be required to continue its current practice of calculating the PLU on a monthly basis. As AT&T enters the local market, and local usage increases, it remains necessary that BellSouth not change the current practice which has been adequate to this point. BellSouth proposes changing to a quarterly basis, which AT&T opposes.	BellSouth offered to accept PLU reporting on an otherwise than quarterly basis (i.e. monthly) for a period of 12 months or until the PLU stabilizes when AT&T: (1) gains a large customer whose addition would have an impact on the PLU; (2) opens a new calling area; or (3) begins marketing in a new area. Otherwise, PLU would be reported quarterly, which is consistent with industry practice.
18.	What are the appropriate intervals for the delivery of collocation space to AT&T? (Collocation, Attachment 4, Section 6.4). (AT&T anticipates that this issue will be settled based on the FPSC's Order on Collocation in Docket Nos. 981834-TP and 990321-TP)	FCC rules require that BellSouth provide collocation within intervals no greater than the best practice intervals of other ILECS. Accordingly, BellSouth should provide collocation within the following intervals: (1) virtual and cageless: 60 calendar days; and (2) Physical (caged): 30 calendar days if AT&T does the construction; and 90 calendar days if BellSouth does the construction. In the event of unforeseen circumstances, BellSouth should apply to the FPSC for suspension of or relief from the intervals.	BellSouth has proposed an interval of no greater than 100 calendar days for the provision of physical collocation arrangements under ordinary conditions. Such a proposal is reasonable and necessary.
19.	When AT&T and BellSouth have adjoining facilities in a building outside BellSouth's central office, should AT&T be able to purchase cross connect facilities to connect to BellSouth or other ALEC networks without having to collocate in BellSouth's	Yes. When BellSouth and AT&T facilities are in close proximity, in order to achieve network efficiency, AT&T should be able to cross connect its network directly from its space to BellSouth's space without having to purchase collocation space from BellSouth.	No. AT&T's proposal has the effect of expanding the definition of premises beyond that which is required by the FCC regulations or that which is necessary. AT&T simply wishes to take advantage of its former corporate ownership of BellSouth. BellSouth's agreement to AT&T's terms would cause BellSouth to provide AT&T with more favorable treatment than

AGREEMENT

between

BellSouth Telecommunications, Inc.

and

AT&T Communications of the South Central States, Inc.

Effective Date:

MISSISSIPPI

TABLE OF CONTENTS

Section **Page**

AGREEMENT 4

PREFACE 4

RECITALS 4

DEFINITIONS and ACRONYMS 4

GENERAL TERMS AND CONDITIONS 5

1. Provision of Local Service and Unbundled Network Elements 5

2. Term of Agreement 6

3. Termination of Agreement; Transitional Support 6

4. Good Faith Performance 7

5. Option to Obtain Services and Elements and Combinations Under Other Agreements 7

6. Responsibility of Each Party 8

7. Governmental Compliance 8

8. Responsibility For Environmental Contamination 9

9. Regulatory Matters 11

10. Liability and Indemnity 12

11. Intellectual Property Rights and Indemnification 14

12. Audits and Inspections 17

13. Performance Measurement 18

14. Force Majeure 19

15. Certain Federal, State and Local Taxes 19

16. Dispute Resolution Process 23

17. Notices 24

18. Confidentiality and Proprietary Information 24

19. Branding 26

20. Directory Listings Requirements 27

21. Insurance Requirements 29

22. Costs 30

23. Disaster Recovery 31

24. Miscellaneous 31

25. Reservation of Rights 35

ATTACHMENTS

Attachment 1	Resale
Attachment 2	Unbundled Network Elements
Attachment 3	Local Interconnection
Attachment 4	Collocation
Attachment 5	Access to Numbers and Number Portability
Attachment 6	Connectivity Billing and Recording
Attachment 7	Interface Requirements for Ordering and Provisioning, Maintenance and Repair, and Pre-Ordering
Attachment 8	Rights of Way (ROW), Conduits, and Pole Attachments
Attachment 9	Performance Measures
Attachment 10	Bona Fide Request/New Business Request Process
Attachment 11	Acronyms
Attachment 12	Network Security
Attachment 13	BAPCO Agreement

less favorable than those that apply to comparable arrangements, facilities, or services being provided by BellSouth to itself, Affiliate or any other carrier whose network is connected to that of BellSouth.

5.2 BellSouth shall provide AT&T at least sixty (60) days' advance notice of any scheduled maintenance activity which may impact AT&T's end users. Scheduled maintenance shall include, without limitation, such activities as, switch software retrofits, power tests, major equipment replacements and cable rolls. Plans for scheduled maintenance shall include, at a minimum, the following information: location and type of facilities, specific work to be performed, date and time work is scheduled to commence, work schedule to be followed, date and time work is scheduled to be completed, estimated number of work-hours for completion.

6. INTERCONNECTION COMPENSATION

6.1 Compensation for Call Transportation and Termination for Local Traffic and Inter-Carrier Compensation for ISP-Bound Traffic

6.1.1 Local Traffic means any telephone call that originates and terminates in the same LATA.

6.1.2 The Parties will compensate each other on a mutual and reciprocal basis for the transport and termination of Local Traffic at the following rates:

04/08/00 – 12/31/00	$.00200 per MOU
01/01/01 – 12/31/01	$.00175 per MOU
01/01/02 – 12/31/02	$.00150 per MOU
01/01/03 – 04/07/03	The Parties will negotiate a rate for the exchange of traffic. If the Parties fail to negotiate a rate by 01/01/03 the applicable FCC or State Commission approved rates for local and ISP-bound traffic will apply.

6.1.2.1 The Parties recognize and agree that this Section will take effect on the effective Date of this Agreement and that they negotiated these annual rates together as a complete rate structure to apply over the full three-year term of this Agreement and that neither party would have agreed to accept a single annual rate in any single year.

6.1.3 The Parties have been unable to agree upon whether, pursuant to the FCC's February 26, 1999 Declaratory Ruling in Docket CC 96-98, dial

4.13.8 Major projects shall be limited to those projects that require the coordination and execution of multiple orders or related activities between and among BellSouth and AT&T work groups specifically relating to: (i) the initial establishment of local interconnection trunk groups; (ii) extending service into a new area; (iii) NXX code moves; (iv) facility grooming; or (v) network rearrangements. If orders that are component pieces of a major project are submitted after project implementation has been jointly planned and coordinated, they shall be submitted with a major project reference. Several orders submitted at one time may not be classified as a major project without the consent of the submitting Party. Each Party will identify a single point of contact that will be responsible for overall coordination and management of a major project through an agreed completion point.

4.13.9 As provided herein, AT&T and BellSouth agree to exchange escalation lists which reflect contact personnel including vice president level officers. These lists shall include name, department, title, phone number, and fax number for each person. AT&T and BellSouth agree to exchange an up-to-date list promptly following changes in personnel or information.

4.14 Interference or Impairment

4.14.1 Within three (3) business days of receipt of notification of blocking of traffic originated within the other Party's network, the Parties shall determine and begin work to implement reasonable corrective measures in a manner consistent with industry practices.

4.15 Local Dialing Parity

4.15.1 BellSouth and AT&T shall provide local and toll dialing parity to each other with no unreasonable dialing delays. Dialing parity shall be provided for all originating telecommunications services that require dialing to route a call. BellSouth and AT&T shall permit similarly situated telephone exchange service end users to dial the same number of digits to make a local telephone call notwithstanding the identity of the end user's or the called party's telecommunications service provider.

5. NETWORK MAINTENANCE

5.1 Outage Repair Standard

5.1.1 In the event of an outage or trouble in any arrangement, facility, or service being provided by BellSouth hereunder, BellSouth will follow procedures for isolating and clearing the outage or trouble that are no

up calls to Internet Service Providers or Information Service Providers ("ISPs") should be considered Local Traffic for purposes of this Agreement. Dial-up Calls are defined as calls to an ISP that are dialed by using a local dialing pattern (7 or 10 digits) by the calling party (hereinafter referred to as "ISP-bound traffic"). However, without prejudice to either Party's position concerning the nature of ISP-bound traffic, the Parties agree for purposes of this Agreement only to compensate each other at the same per minute of use rates set forth in Paragraph 6.1.2 for ISP-bound traffic. It is expressly understood and agreed that this inter-carrier compensation mechanism for ISP-bound traffic is being established: (1) in consideration for a waiver and release by each party for any and all claims for reciprocal compensation for ISP-bound traffic exchanged between the parties prior to the Effective Date of this Agreement, which is hereby given; and (2) subject to the terms and conditions in section 6.1.4.

6.1.3.1 The Parties recognize and agree that the FCC, courts of competent jurisdiction, or state commissions with jurisdiction over the Parties will issue subsequent decisions on ISP-bound traffic ("Subsequent Decisions"). Notwithstanding any provision in this Agreement to the contrary, the inter-carrier compensation mechanism established in Section 6.1.3 shall continue at the rates set forth in section 6.1.2 for the full term of this Agreement without regard to such Subsequent Decisions, except as provided for in Section 6.1.3.2.

6.1.3.2 To the extent such Subsequent Decisions render the inter-carrier compensation mechanism for ISP-bound traffic set forth in section 6.1.3 in violation of applicable federal or state law, the Parties agree to amend this Agreement within thirty (30) days of the effective date of any such Subsequent Decision to conform the inter-carrier compensation mechanism set forth in section 6.1.3 with such Subsequent Decision. In the event of such an amendment, there will no true up for compensation paid prior to the amendment.

6.1.4 The Parties recognize and agree that the compensation for the transport and termination of Local Traffic set forth in section 6.1.2 and the inter-carrier compensation mechanism for ISP-bound traffic set forth in section 6.1.3 are intended to allow each Party to recover costs associated with such traffic. The Parties recognize and agree that such compensation will not be billed and shall not be paid for calls where a Party sets up a call, or colludes with a third party to set up a call, to the other Party's network for the purpose of receiving reciprocal compensation, and not for the purposes of providing a telecommunications service to an end user.

6.1.5 If AT&T utilizes a switch outside the LATA and BellSouth chooses to purchase dedicated or common (shared) transport from AT&T for transport and termination of BellSouth originated traffic, BellSouth will pay AT&T no more than the airline miles between the V & H coordinates of the Point of Interface within the LATA where AT&T receives the BellSouth-originated traffic and the V & H coordinates of the BellSouth Exchange Rate Center Area that the AT&T terminating NPA/NXX is associated in the same LATA. For these situations, BellSouth will compensate AT&T at either dedicated or common (shared) transport rates specified in Exhibit A and based upon the functions provided by AT&T as defined in this Attachment.

6.1.6 The origination and end point of the call shall determine the jurisdiction of the call. Unless expressly agreed to by the Parties in this Agreement, neither Party shall represent as local traffic any traffic for which access charges may be lawfully assessed. The Parties have been unable to agree as to whether a call that travels over transport protocol methods other than those being utilized by the Parties on the effective date of this Agreement and crosses LATA boundaries constitutes switched access traffic. However, because the Parties are not currently utilizing alternative transport protocol methods on the effective date of this Agreement, the Parties will resume negotiations on this issue if and when either Parties adopts a new transport protocol method. If the parties are unable to resolve this issue, then the Parties will submit the dispute to the Mississippi Public Service Commission or the Federal Communications Commission, whichever is appropriate, for resolution.

6.1.7 Billing Point of Interface Compensation. If BellSouth establishes a BPOI, AT&T agrees to pay to BellSouth Interoffice Dedicated Transport and any associated Multiplexing for BellSouth to transport BellSouth's originated Local and ISP-boundTraffic over BellSouth facilities from the BPOI as described in Section 1.8 of this Attachment to the Physical Point of Interface. Such Interoffice Dedicated Transport shall be priced as set forth in Exhibit A, pursuant to Section 3.5.7 of this Attachment. The Interoffice Dedicated Transport mileage shall be the airline mileage between the Vertical and Horizontal (V&H) coordinates of the BPOI and the V&H coordinates of the BellSouth Point of Interface.

6.1.8 Trunks and Facilities for Local and ISP-bound Traffic. Compensation for trunks and associated facilities for Local and ISP-bound traffic shall be handled in accordance with Section 1.9 of this Attachment.

6.2 Unidentifiable traffic. AT&T shall utilize its NPA/NXXs in such a way and will provide the necessary information so that BellSouth shall be

able to distinguish local from intraLATA toll traffic for BellSouth originated traffic. AT&T end users assigned NPA/NXX line numbers shall be physically located in the BellSouth rate center with which the NPA/NXX has been associated. Whenever BellSouth delivers traffic to AT&T for termination on the AT&T's network, if BellSouth cannot determine, because of the manner in which AT&T has utilized its NXX codes whether the traffic is local or toll, BellSouth will charge the applicable rates for originating intrastate network access service as reflected in BellSouth's Intrastate Access Services Tariff. BellSouth will make appropriate billing adjustments if AT&T can provide sufficient information for BellSouth to determine whether said traffic is local or toll.

6.3 Percent Local Use. Each Party will report to the other a Percentage Local Usage ("PLU"). The application of the PLU will determine the amount of local minutes to be billed to the other Party. For purposes of developing the PLU, each Party shall consider every local call and every long distance call, excluding intermediary traffic. BellSouth shall report quarterly PLU factors to AT&T. BellSouth will accept from AT&T monthly PLU factors provided under the previous agreement until the third quarter of 2001, at which time AT&T shall report quarterly PLU factors. BellSouth and AT&T shall also provide a positive report updating the PLU. Detailed requirements associated with PLU reporting shall be as set forth in BellSouth's Standard Percent Local Use Reporting Platform for Interconnection Purchasers, as it is amended from time to time during this Agreement. Notwithstanding the foregoing, where the terminating company has message recording technology that identifies the traffic terminated, such information, in lieu of the PLU factor, shall at the company's option be utilized to determine the appropriate reciprocal compensation to be paid.

6.4 Percent Local Facility. Each Party shall report to the other a Percent Local Facility ("PLF"). The application of the PLF will determine the portion of switched dedicated transport to be billed per the local jurisdiction rates. The PLF shall be applied to multiplexing, local channel and interoffice channel switched dedicated transport utilized in the provision of local interconnection trunks. Each Party shall update its PLF on the first of January, April, July and October of the year and shall send it to the other Party to be received no later than 30 calendar days after the first of each such month to be effective the first bill period the following month, respectively. Requirements associated with PLU and PLF calculation and reporting shall be as set forth in BellSouth's Percent Local Use/Percent Local Facility Reporting Guidebook, as it is amended from time to time.

7. PERCENTAGE INTERSTATE USAGE

7.1 Percentage Interstate Usage. For combined interstate and intrastate AT&T traffic terminated by BellSouth over the same facilities, AT&T will be required to provide a projected Percentage Interstate Usage ("PIU") to BellSouth. All jurisdictional report requirements, rules and regulations for Interexchange Carriers specified in BellSouth's Intrastate Access Services Tariff will apply to AT&T. After interstate and intrastate traffic percentages have been determined by use of PIU procedures, the PLU factor will be used for application and billing of local interconnection. Notwithstanding the foregoing, where the terminating company has message recording technology that identifies the traffic terminated, such information, in lieu of the PLU factor, shall at the company's option be utilized to determine the appropriate reciprocal compensation to be paid.

7.2 Audits. On thirty (30) days' written notice, each Party must provide the other the ability and opportunity to conduct an annual audit of the traffic reported. BellSouth and AT&T shall retain records of call detail for a minimum of nine months from which a PLU and/or PIU can be ascertained. The audit shall be accomplished during normal business hours at an office designated by the Party being audited. Audit requests shall not be submitted more frequently than one (1) time per calendar year. Audits shall be performed by a mutually acceptable independent auditor paid for by the Party requesting the audit. The PLU and/or PIU shall be adjusted based upon the audit results and shall apply to the usage for the quarter the audit was completed, to the usage for the quarter prior to the completion of the audit, and to the usage for the two quarters following the completion of the audit. If, as a result of an audit, either Party is found to have overstated the PLU and/or PIU by twenty percentage points (20%) or more, that Party shall reimburse the auditing Party for the cost of the audit.

7.3 Compensation for 800 Traffic. Each Party shall compensate the other pursuant to the appropriate switched access charges, including the database query charge as set forth in the each Party's intrastate or interstate switched access tariffs.

7.4 Records for 8YY Billing. Each Party will provide to the other the appropriate records necessary for billing intraLATA 8YY customers. Records required for billing end users purchasing 8YY Services shall be provided pursuant to Attachment 6 of this Agreement, incorporated herein by this reference.

7.5 Transit Traffic Service. BellSouth shall provide tandem switching and transport services for AT&T's transit traffic. Transit traffic is traffic originating on AT&T's network that is switched and/or transported by BellSouth and delivered to a third party's network, or traffic originating

on a third Party's network that is switched and/or transported by BellSouth and delivered to AT&T's network. Rates for local transit traffic shall be the applicable call transport and termination charges as set forth in Exhibit A to this Attachment. Rates for intraLATA toll and Switched Access transit traffic shall be the applicable call transport and termination charges as set forth in BellSouth Interstate or Intrastate Switched Access tariffs. Switched Access transit traffic presumes that AT&T's end office is subtending the BellSouth Access Tandem for switched access traffic to and from AT&T's end users utilizing BellSouth facilities, either by direct trunks with the IXC, or via the BellSouth Access Tandem. Billing associated with all transit traffic shall be pursuant to MECAB procedures. Wireless Type 1 traffic shall not be treated as transit traffic from a routing or billing perspective. Wireless Type 2A traffic shall not be treated as transit traffic from a routing or billing perspective until BellSouth and the Wireless carrier have the capability to properly meet-point-bill in accordance with Multiple Exchange Carrier Access Billing ("MECAB") guidelines.

8. OSS RATES

8.1 To the extent AT&T orders a Service and Element for the purpose of interconnection through the LSR process, the OSS Rates set forth in Exhibit A of Attachment 2, incorporated herein by this reference, shall apply.

Relevant Information Regarding First Interconnection Agreement for Florida, Second Interconnection Agreement for Mississippi, and Second Interconnection Agreement for Florida

First Interconnection Agreement for Florida:

Period: June 10, 1997 – June 10, 2000
FL PSC Approval: June 19, 1997 – Docket No. 960833-TP
September 21, 1999 – FL PSC approves TCG of South Florida, Inc.'s Adoption of First Interconnection Agreement

Definition of "Local Traffic" in First Interconnection Agreement for Florida – Attachment 11, Page 6.

"Local Traffic" – means any telephone call that originates and terminates in the same LATA and is billed by the originating Party as a local call, including any call terminating in an exchange outside of BellSouth's service area with respect to which BellSouth has a local interconnection agreement with an independent LEC, with which AT&T is not directly interconnected.

Second Interconnection Agreement for Mississippi:

Period: March 28, 2001 – March 28, 2004
MS PUC Approval: Parties agree negotiated agreement becomes effective 30 days after filing with MS PUC.

Definition of "Local Traffic" in Mississippi Second Interconnection Agreement – Attachment 3, Page 20, Section 6:

6.1 Compensation for Call Transportation and Termination for Local Traffic and Inter-Carrier Compensation for ISP-Bound Traffic.

6.1.1 Local Traffic means any telephone call that originates and terminates in the same LATA.

Local Reciprocal Compensation Rates in Mississippi; Second Interconnection Agreement, Attachment 3, Page 20.

6.1.2 The Parties will compensate each other on a mutual and reciprocal basis for the transport and termination of Local Traffic at the following rates:

04/08/00 – 12/31/00 $.00200 per MOU
01/01/01 – 12/31/01 - $.00175 per MOU
01/01/02 – 12/31/02 - $.00150 per MOU
01/01/03 – 04/07/03 – The Parties will negotiate a rate for the exchange of traffic. If the Parties fail to negotiate a rate by 01/01/03, the applicable FCC or State Commission approval rates for Local and ISP-bound traffic will apply.

6.1.3 The Parties have been unable to agree upon whether, pursuant to the FCC's February 26, 1999 Declaratory Ruling in Docket CC 96-98, dial-up calls to Internet Service Providers or Information Service Providers ("ISPs") should be considered Local Traffic for purposes of this Agreement. Dial-up calls are defined as calls to an ISP that are dialed by using a local dialing pattern (7 or 10 digits) by the calling party (hereinafter referred to as "ISP-bound traffic"). However, without prejudice to either Party's position concerning the nature of ISP-bound traffic, the Parties agree for purposes of this Agreement only to compensate each other at the same per minute of use rates set forth in Paragraph 6.1.2 for ISP-bound traffic. It is expressly understood and greed that this inter-carrier compensation mechanism for ISP-bound traffic is being established: (1) in consideration of a waiver and release by each party for any and all claims for reciprocal compensation for ISP-bound traffic exchanged between the parties prior to the Effective Date of this Agreement, which is hereby given; and (2) subject to the terms and conditions set forth in 6.1.4.

6.1.3.1. The Parties recognize and agree that the FCC, courts of competent jurisdiction, or State Commissions with jurisdiction over the Parties will issue subsequent decisions on ISP-bound traffic ("Subsequent Decisions"). Notwithstanding any provisions in this Agreement to the contrary, the inter-carrier compensation mechanism established in Section 6.1.3 shall continue at the rates set forth in Section 6.1.2 for the full term of this Agreement without regard to such Subsequent Decisions, except as provided for in Section 6.1.3.2.

6.1.3.2 To the extent such Subsequent Decisions render the inter-carrier compensation mechanism for ISP-bound traffic set forth in 6.1.3 in violation of applicable federal or state law, the Parties agree to amend this Agreement within thirty (30) days of the effective date

of any such Subsequent Decision to conform the inter-carrier compensation mechanism set forth in 6.1.3 with such Subsequent Decision. In the event of such an amendment, there will be no true up for compensation paid prior to the amendment.

Billing Factors From Mississippi, Second Interconnection Agreement, Attachment 3, Page 23:

6.3 Percent Local Use. Each Party will report to the other a Percentage Local Usage ("PLU"). The application of the PLU will determine the amount of local minutes to be billed to the other Party. For purposes of developing the PLU, each Party shall consider every local call and every long distance call, excluding intermediary traffic. BellSouth shall report quarterly PLU factors to AT&T. BellSouth shall accept from AT&T monthly PLU factors provided under the previous agreement until the third quarter of 2001, at which time AT&T shall report quarterly PLU factors. BellSouth and AT&T shall also provide a positive report updating the PLU. Detailed requirements associated with PLU reporting shall be as set froth in BellSouth's Standard Percent Local Use Reporting Platform for Interconnection Purchasers, as it is amended from time to time during this Agreement. Notwithstanding the foregoing, where the terminating company has message recording technology that identifies the traffic terminated, such information, in lieu of the PLU factor, shall at the company's option be utilized to determine the appropriate reciprocal compensation to be paid.

7.1 Percentage Interstate Usage. For combined interstate and intrastate AT&T traffic terminated by BellSouth over the same facilities, AT&T will be required to provide a projected Percentage Interstate Usage ("PIU") to BellSouth. All jurisdictional report requirements, rules and regulations for Interexchange Carriers specified in BellSouth's Intrastate Access Services Tariff will apply to AT&T. After interstate and intrastate percentages have been determined by use of PIU procedures, the PLU factor will be used for application and billing of local interconnection. Notwithstanding the foregoing, where the terminating company has message recording technology that identifies the traffic terminated, such information, in lieu of the PLU factor, shall at the company's option be utilized to determine the appropriate reciprocal compensation to be paid.

Intervening Event Between Execution of Second Interconnection Agreement for Mississippi and Execution of Second Interconnection Agreement for Florida

FCC's Order on Remand and Report and Order in CC Docket 96-98 and 99-68 released April 27, 2001 ("ISP Order on Remand").

Second Interconnection Agreement for Florida:

Period: October 26, 2001 – October 26, 2004
FL PSC Approval: December 7, 2001, Docket No. 000731-TP

Provisions from Second Interconnection Agreement for North Carolina Regarding "Local Traffic," Attachment 3, Page 24:

5.3.1 Compensation For Local Traffic

5.3.1.1 For the treatment of local and ISP-bound traffic in this Agreement, the Parties agree to implement the FCC's Order on Remand and Report and Order in CC Docket No. 96-98 and 99-68 released April 27, 2001 ("ISP Order on Remand"). The Parties further agree to amend this agreement, within sixty (60) days of execution, to incorporate language reflecting the FCC ISP Order on Remand. At such time as that amendment is finalized, the Parties agree to work cooperatively to "true-up" compensation amounts consistent with the terms of the amended language from the effective date of the FCC ISP Order on Remand to the date the amendment is finalized. In this Section, the Parties express their intent to file negotiated language to incorporate the FCC's ISP Order on Remand. If the Parties are unable to agree on this language addressing this issue by the time the language is due to be filed, either Party may petition the Florida Public Service Commission to resolve the dispute between the Parties as to the appropriate language addressing this issue. Additionally, the Parties agree to apply a "LATAwide" local concept to this Attachment 3, meaning that traffic that has been traditionally been treated as intraLATA toll traffic will now be treated as local for intercarrier compensation purposes, except for those calls that are originated or terminated through switched access arrangements as established by the State Commission or FCC.

5.3.3 Switched Access Traffic. Switched Access Traffic is defined as telephone calls requiring local transmission or switching services for the purpose of the origination or termination of Intrastate InterLATA and Interstate InterLATA traffic. Switched Access Traffic includes, but is not limited to, the following types of traffic: Feature Group A, Feature Group B, Feature Group D, toll free access (e.g., 800/877/888), 900 access, and their successors. Additionally, if BellSouth or AT&T is the other Party's end user's presubscribed interexchange carrier or if any end-users uses BellSouth or AT&T as an interexchange carrier on a 101XXXX basis, BellSouth or AT&T will charge the other Party the appropriate tariff charges for originating switched access services. The Parties have been unable to agree as to whether Voice over Internet Protocol ("VOIP") transmissions which cross local calling area boundaries constitute Switched Access Traffic. Notwithstanding the foregoing, and without waiving any rights with respect to either Party's position as to the jurisdictional nature of VOIP, the Parties agree to abide by any effective and applicable FCC rules and orders regarding the nature of such traffic; if any; provided however, that any VOIP transmission which originates in one LATA and terminates in another LATA (i.e. the end-to-end points of the call), shall not be compensated as Local Traffic. This Section is interrelated to Section 5.3.1.1.

5.3.4 The Parties have been unable to agree as to the appropriate compensation for calls which originate in a LATA and terminate to a physical location outside of that LATA but to a number assigned to a rate center within that LATA. However, without prejudice to either Party's position concerning the application of reciprocal compensation or access charges to such traffic, the Parties agree for purposes of this Agreement only and subject to the Parties' agreement to terms of Section 5.3.1.1 and 5.3.3 and on an interim basis until the FCC issues an Order addressing this issue, neither Party shall bill the other reciprocal compensation, intercarrier compensation or switched access in connection with the exchange of any traffic described in the first sentence of this paragraph. Once the FCC issues an Effective Order addressing this issue, the Parties agree to amend this Interconnection Agreement to comply with the Order on a prospective basis only within thirty (30) days of either Party's written request. No "true-up" shall be required in connection with such an Effective Order. Nothing in this Section 5.3.4 is intended to change the way that the Parties treat ISP-bound traffic in accordance with the FCC's ISP Order on Remand.

5.3.7 Percent Local Use. Each Party will report to the other a Percentage Local Usage ("PLU"). The application of the PLU will determine the amount of local minutes to be billed to the other Party. For purposes of developing the PLU, each Party shall consider every local call and every long distance call, excluding intermediary traffic. BellSouth shall report quarterly PLU factors to AT&T. BellSouth shall accept from AT&T monthly PLU factors provided under the previous agreement until the third (3rd) quarter of 2001, at which time AT&T shall report quarterly PLU factors. BellSouth and AT&T shall also provide a positive report updating the PLU. Detailed requirements associated with PLU reporting shall be as set froth in BellSouth's Standard Percent Local Use Reporting Platform for Interconnection Purchasers, as it is amended from time to time during this Agreement. Notwithstanding the foregoing, where the terminating company has message recording technology that identifies the traffic terminated, such information, in lieu of the PLU factor, shall at the company's option be utilized to determine the appropriate reciprocal compensation to be paid.

5.3.9 Percentage Interstate Usage. For combined interstate and intrastate AT&T traffic terminated by BellSouth over the same facilities, AT&T will be required to provide a projected Percentage Interstate Usage ("PIU") to BellSouth. All jurisdictional report requirements, rules and regulations for Interexchange Carriers specified in BellSouth's Intrastate Access Services Tariff will apply to AT&T. After interstate and intrastate percentages have been determined by use of PIU procedures, the PLU factor will be used for application and billing of local interconnection. Notwithstanding the foregoing, where the terminating company has message recording technology that identifies the traffic terminated, such information, in lieu of the PLU factor, shall at the company's option be utilized to determine the appropriate reciprocal compensation to be paid.

FIRST AMENDMENT TO SECOND INTERCONNECTION AGREEMENT FOR FLORIDA

Effective Date of Amendment: April 18, 2002
FL PSC Approval: Pending

5.3 Interconnection Compensation

5.3.1 Intercarrier Compensation for Call Transport and Termination of Local and ISP-bound Traffic

5.3.1.1 The Parties agree to apply a "LATAwide" local concept to this Attachment 3, meaning that traffic that has traditionally been treated as intraLATA toll traffic will now be treated as local for intercarrier compensation purposes, except for those calls that are originated or terminated through switched access arrangements as established by the State Commission or FCC. Nothing in this Agreement shall be construed in any way to constrain either Party's choices regarding the size of the local calling areas that it may establish for its end users.

5.3.2 ISP-bound Traffic is defined as calls to an information service provider or Internet service provider ("ISP") that are dialed by using a local dialing pattern (7 to 10 digits) by a calling party in one LATA to an ISP server or modem in the same LATA and is a subset of "information access." Information access is defined as the provision of specialized exchange telecommunications services in connection with the origination, termination, transmission, switching, forwarding or routing of telecommunications traffic to or from the facilities of a provider of information services. ISP-bound Traffic is not Local Traffic or IP Telephony as set forth in 5.3.10 of this agreement, subject to reciprocal compensation, but instead is information access traffic subject to reciprocal compensation, but instead is information access traffic subject to the FCC's jurisdiction. Notwithstanding the definitions of Local Traffic and ISP-bound traffic above, and pursuant to the FCC's Order on Remand and Report and Order in CC Docket 99-68 released April 27, 2001 ("ISP Order on Remand"), BellSouth and AT&T agree that the rebuttable presumption that all combined circuit switched Local and ISP-bound Traffic delivered to BellSouth or AT&T that exceeds a 3:1 ratio of terminating to originating traffic on a statewide basis shall be considered ISP-bound traffic for compensation purposes. BellSouth and AT&T further agree to the

rebuttable presumption that all combined circuit switched LOCAL and ISP-bound Traffic delivered to BellSouth or AT&T that does not exceed a 3:1 ratio of terminating to originating traffic on a statewide basis shall be considered Local Traffic for compensation purposes.

5.3.3 All Local and ISP Traffic that is exchanged pursuant to this Agreement shall be compensated as follows:

5.3.3.1 Commencing on July 1, 2001 and continuing until December 31, 2001, $.0015 per minute of use.

5.3.3.2 Commencing on January 1, 2002 and continuing until June 30, 2003, $.0010 per minute of use.

5.3.3.3 Commencing on July 1, 2003 and continuing until June 30, 2004, or until further FCC action (whichever is later), $.0007 per minute of use.

5.3.3.4 No other per MOU charges shall apply to the carriage of Local and ISP Traffic by either Party for the other Party except as set forth above. Compensation for Transit Traffic shall be as set forth in Section 5.3.20.

5.3.4 The ability of either Party to collect a credit for intercarrier compensation paid for ISP Traffic, as described in section 5.3.5, following, shall be limited as follows based on "growth caps" on compensation for ISP Traffic ordered by the FCC. The Parties shall first determine the total number of minutes of use of ISP Traffic (as defined in this Agreement) terminated by one Party for the other Party for the three-month period commencing January 1, 2001 and ending March 31, 2001. The Parties shall then multiply this number of minutes by 4.4, and the resulting product shall be the terminating Party's "2001 ISP Annualized Traffic Cap." The total number of minutes of use of ISP Traffic for which one Party may receive compensation from the other Party during the period July 1, 2001 through December 31, 2001 shall equal 50% of that Party's 2001 ISP annualized traffic cap, due to the Parties' mid-year one-time compensation payment. The total number of minutes of use of ISP Traffic for which one Party may receive compensation from the other Party during the period January 1, 2002 through December 31, 2002 or for any calendar

year thereafter shall equal 1.1 times that Party's 2001 ISP Annualized Traffic Cap.

5.3.5 For the period commencing July 1, 2001, each party will bill the other for all minutes of use specified in 5.3.3, above. The parties will meet in February 2002 on a trial basis to determine if annual meetings are sufficient for determining the number of ISP-bound minutes. If such trial proves successful, the parties will meet each succeeding February, thereafter, for the duration of this Agreement to determine the number of ISP-bound minutes and there will be no need to amend this Agreement. If the trial proves unsuccessful, no later than June 2002, the parties will develop a subsequent process and amend this Agreement Intercarrier Compensation paid for any ISP-bound minutes of use that exceeds the caps described in 5.3.4, above, will be credited to that party in the March bill. At this same meeting, the Parties will reach agreement on the ISP-bound minutes of use cap for the next time period.

5.3.10 Switched Access Traffic. Switched Access Traffic is defined as telephone calls requiring local transmission or switching services for the purpose of the origination or termination of Intrastate InterLATA and Interstate InterLATA traffic. Switched Access Traffic includes, but is not limited to, the following types of traffic: Feature Group A, Feature Group B, Feature Group D, toll free access (e.g., 800/877/888), 900 access, and their successors. Additionally, if BellSouth or AT&T is the other Party's end user's presubscribed interexchange carrier or if an end-user uses BellSouth or AT&T as an interexchange carrier on a 101XXXX basis, BellSouth or AT&T will charge the other Party the appropriate tariff charges for originating switched access services. The Parties have been unable to agree as to whether Voice over Internet Protocol ("VOIP") transmissions which cross local calling area boundaries constitute Switched Access Traffic. Notwithstanding the foregoing, and without waiving any rights with respect to either Party's position as to the jurisdictional nature of VOIP, the Parties agree to abide by any effective and applicable FCC rules and orders regarding the nature of such traffic and the compensation payable by the Parties for such traffic; if any; provided however, that any VOIP transmission which originates in one LATA and terminates in another LATA (i.e. the end-to-end points of the call), shall not be compensated as Local Traffic. This Section is interrelated to Section 5.3.1.1.

5.3.11 The Parties have been unable to agree as to the appropriate compensation for calls which originate in a LATA and terminate to a physical location outside of that LATA but to a number assigned to a rate center within that LATA. However, without prejudice to either Party's position concerning the application of reciprocal compensation or access charges to such traffic, the Parties agree for purposes of this Agreement only and subject to the Parties' agreement to terms of Section 5.3.1.1 and 5.3.3 and on an interim basis until the FCC issues an Order addressing this issue, neither Party shall bill the other reciprocal compensation, intercarrier compensation or switched access in connection with the exchange of any traffic as described in the first sentence of this paragraph. Once the FCC issues an Effective Order addressing this issue, the Parties agree to amend this Interconnection Agreement to comply with the Order on a prospective basis only within thirty (30) days of either Party's written request. No "true-up" shall be required in connection with such an Effective Order. Nothing in this Section 5.3.4 is intended to change the way that the Parties treat ISP-bound traffic in accordance with the FCC's ISP Order on Remand.

5.3.14 Percent Local Use. Each Party will report to the other a Percentage Local Usage ("PLU"). The application of the PLU will determine the amount of local minutes to be billed to the other Party. For purposes of developing the PLU, each Party shall consider every local call and every long distance call, excluding intermediary traffic. BellSouth shall report quarterly PLU factors to AT&T. BellSouth will accept from AT&T monthly PLU factors provided under the previous agreement until the third quarter of 2001, at which time AT&T shall report quarterly PLU factors. BellSouth and AT&T shall also provide a positive report updating the PLU. Detailed requirements associated with PLU reporting shall be as set froth in BellSouth's Standard Percent Local Use Reporting Platform for Interconnection Purchasers, as it is amended from time to time during this Agreement. Notwithstanding the foregoing, where the terminating company has message recording technology that identifies the traffic terminated, such information, in lieu of the PLU factor, shall at the company's option be utilized to determine the appropriate reciprocal compensation to be paid.

5.3.16 Percentage Interstate Usage. For combined interstate and intrastate AT&T traffic terminated by BellSouth over the same facilities, AT&T will be required to provide a projected Percentage Interstate Usage ("PIU") to BellSouth. All jurisdictional report

requirements, rules and regulations for Interexchange Carriers specified in BellSouth's Intrastate Access Services Tariff will apply to AT&T. After interstate and intrastate traffic percentages have been determined by use of PIU procedures, the PLU factor will be used for application and billing of local interconnection. Notwithstanding the foregoing, where the terminating company has message recording technology that identifies that traffic terminated, such information, in lieu of the PLU factor, shall at the company's option be utilized to determine the appropriate reciprocal compensation to be paid.

Peacock, Billy C (Bill)

From: Michael.Willis1@bridge.bellsouth.com
Sent: Tuesday, May 22, 2001 5:44 PM
To: Peacock, Billy C (Bill), NCAM
Subject: AT&T redline

Importance: High

AT&T redline

Bill: Attached is the BellSouth redline as promised to today. Please provide AT&T's feedback on the attached and any follow-up questions by the end of this week. It would be helpful if you mark each subsection with agreed or disagree and or discussion needed. Please forward on to Talbot.

I have us down for a follow-up local interconnection meeting for June 5, 2001.

Thanks.

FLORIDA PUBLIC SERVICE COMMISSION
DOCKET NO. 020919-TP EXHIBIT NO. 21
COMPANY/ WITNESS: BS - EMails AT+T Redline
DATE: 5-07-03

21

Peacock, Billy C (Bill)

From: Beth.Shiroishi@bridge.bellsouth.com
To: Leah.Cooper@BellSouth.COM; E.Honeycutt@bridge.bellsouth.com; Michael.Willis1@bridge.bellsouth.com
Subject: AT&T redline

ATT5_22.DOC DIAGRAMS.DOC

Michael - Pls forward to AT&T.

Attached is the Att 3 as a result of last weeks call and the new diagrams that I owed you. For items that are now agreed, I "unbolded" the language but still showed changes as redlined. If I modified a BST proposal, but AT&T has not yet accepted, the language is redlined, but still in bold. There are some items that are still open to BellSouth. Additionally, I did not redline in the "point of interconnection" vs. "interconnecting trunk group" language that was sent to you last Monday. If AT&T accepts the language, I will add it in then. Thanks,

Beth

2.9.4 The parties shall mutually agree upon a Point of Interface outside of the BSWC as a Fiber Meet point and shall make all necessary preparations to receive and to allow and enable delivery of fiber optic facilities into the Point of Interface with sufficient spare length to reach the Point of Interface. A Common Language Location Identification ("CLLI") code will be established for each Point of Interface. The code established must be a building type code. All orders shall originate from the Point of Interface (i.e., Point of Interface to AT&T, Point of Interface to BellSouth).

2.9.5 The Parties shall deliver and maintain their own strands wholly at their own expense. Upon verbal request by either Party, the other Party shall allow access to the Fiber Meet entry point for maintenance purposes as promptly as possible.

2.9.6 The Parties shall jointly coordinate and undertake maintenance of the SONET transmission system. Each Party shall be responsible for maintaining the components of their own SONET transmission system.

2.9.7 Each Party will be responsible for (i) providing its own transport facilities to the Fiber Meet, and (ii) the cost to build-out its facilities to such Fiber Meet.

2.9.8 Neither Party shall charge the other for its portion of the Fiber Meet facility between the ASWC and the BSWC used exclusively for the other Party's local traffic (i.e., the Local Channel). The Parties do not intend to utilize this arrangement for transit traffic.

3. INTERCONNECTION TRUNKING AND ROUTING

3.1 The Parties will convert all existing interconnection arrangements and trunks to the interconnection arrangements described in this Attachment in accordance with the following:

3.2 [Within 45 days of ~~the Effective Date~~either Party's written request, the Parties will mutually develop an operations plan based on sound engineering and operations principles, which will specify the guidelines to convert from the existing interconnection arrangements to the interconnection arrangements described in this Attachment 3. Such guidelines will conform to standard industry practices adopted by and contained in documents published by Industry Forums, including but not limited to, the Alliance for Telecommunications Industry Solutions ("ATIS") and the Ordering and Billing Forum ("OBF").

3.3 Each Party shall bear its own costs to convert from the existing interconnection arrangements to the interconnection arrangements described in this Attachment.

3.4 Unless otherwise mutually agreed, the Parties will complete the conversion within one [1] year of the ~~Effective Date~~Requesting Party's written request~~ of the Agreement~~.

3.5 If, following one [1] year after the ~~Effective Date of the Agreement~~Requesting Parth's written request, there exists any interconnection trunks which have not been converted to the interconnection arrangements described in this Attachment 3, then either Party may invoke the dispute resolution proceeding, pursuant to Section 16 of the General Terms and Conditions of this Agreement, incorporated herein by this reference. ~~[OPEN-BST/AT&T]~~

3.6 The Parties will use the following interconnection standards:

3.6.1 The Parties agree to establish Binary 8 Zero Sum Extended Superframe line protocol, where technically feasible.

3.6.2 In those cases where either Party's equipment will not support 64K Clear Channel Capability ("CCC"), the Parties agree to establish AMI line coding. Any AMI line coding will be Superframe formatted. DS3 facilities will be provisioned with C-bit parity.

3.6.3 Where additional equipment is required, such equipment shall be obtained, engineered, and installed to support 64K CCC trunks.

3.6.4 All interconnection facilities between the Parties will be sized according to mutual forecasts developed per the requirements of Section 4.14 of this Attachment 3 and sound engineering practices.

3.6.5 Interconnection will be provided utilizing either a DS1 or DS3 interface or, with the mutual agreement of the Parties, another technically feasible interface (e.g., STS-1).

3.6.6 BellSouth and AT&T shall establish interconnecting trunk groups and trunking configurations between networks including the establishment of one-way or two-way trunks in accordance with **[Exhibit ___ of this Attachment 3, attached hereto and incorporated herein by this reference.] [OPEN-BST to provide list]**

3.6.7 [All terms and conditions, as well as charges, both non-recurring and recurring, associated with interconnecting trunk groups between BellSouth and AT&T not addressed in Exhibit A shall be as set forth in the appropriate Party's intrastate or interstate tariff for switched access services. For two-way trunking that carries the Parties' local and intraLATA toll traffic, excluding transit traffic, the Parties shall be compensated for the nonrecurring and recurring charges for trunks and DS1 facilities at 50% of the applicable contractual or tariff rates for the services provided by each Party. AT&T shall be responsible for

5.3.1 Compensation for Local Traffic

5.3.1.1 **For reciprocal compensation between the Parties pursuan to this Attachment, Local Traffic is defined as ~~means~~ any telephone call that originates and terminates in the same LATA except for those calls that are originated or terminated through switched access arrangements as established by the ruling regulatory body~~and is billed by the originating Party as a local call~~ [when the originating Party has its own switch]. [OPEN-AT&T]** Therefore, when an AT&T end user originates traffic and AT&T sends it to BellSouth for termination, AT&T will determine whether the traffic is local or intraLATA toll. When a BellSouth end user originates traffic and BellSouth sends it to AT&T for termination, BellSouth will determine whether the traffic is local or intraLATA toll. Each Party will provide the other with information that will allow it to distinguish local from intraLATA toll traffic. At a minimum, each Party shall utilize NXX's in such a way that the other Party shall be able to distinguish local from intraLATA toll traffic.

DISAGREE

AT&T PROPOSAL: As clarification of this definition and for reciprocal compensation, Local Traffic does include traffic that originates from or terminates to or through an enhanced service provider or information service provider.

BST PROPOSAL: As clarification of this definition and for reciprocal compensation, Local Traffic does not include traffic that originates from or is directed to or through an enhanced service provider or information service provider.

The Parties recognize and agree that the compensation for the transport and termination of Local Traffic are intended to allow each Party to recover costs associated with such traffic. The Parties recognize and agree that such compensation will not be billed and shall not be paid for calls where a Party sets up a call, or colludes with a third party to set up a call, to the other Party's network for the purpose of receiving reciprocal compensation, and not for the purposes of providing a telecommunications service to an end user As ~~further clarification, Local Traffic does not include traffic that consists of minutes of use from any end user customer that relies upon a call placed by that end user customer or on the end user customer's behalf to establish or maintain a network connection, if: (a) minutes of use to be billed are primarily associated with traffic of a type not routinely and ordinarily recognized by a reasonable person to constitute traffic as a result of a telephone~~

Exhibit B

Basic Architecture

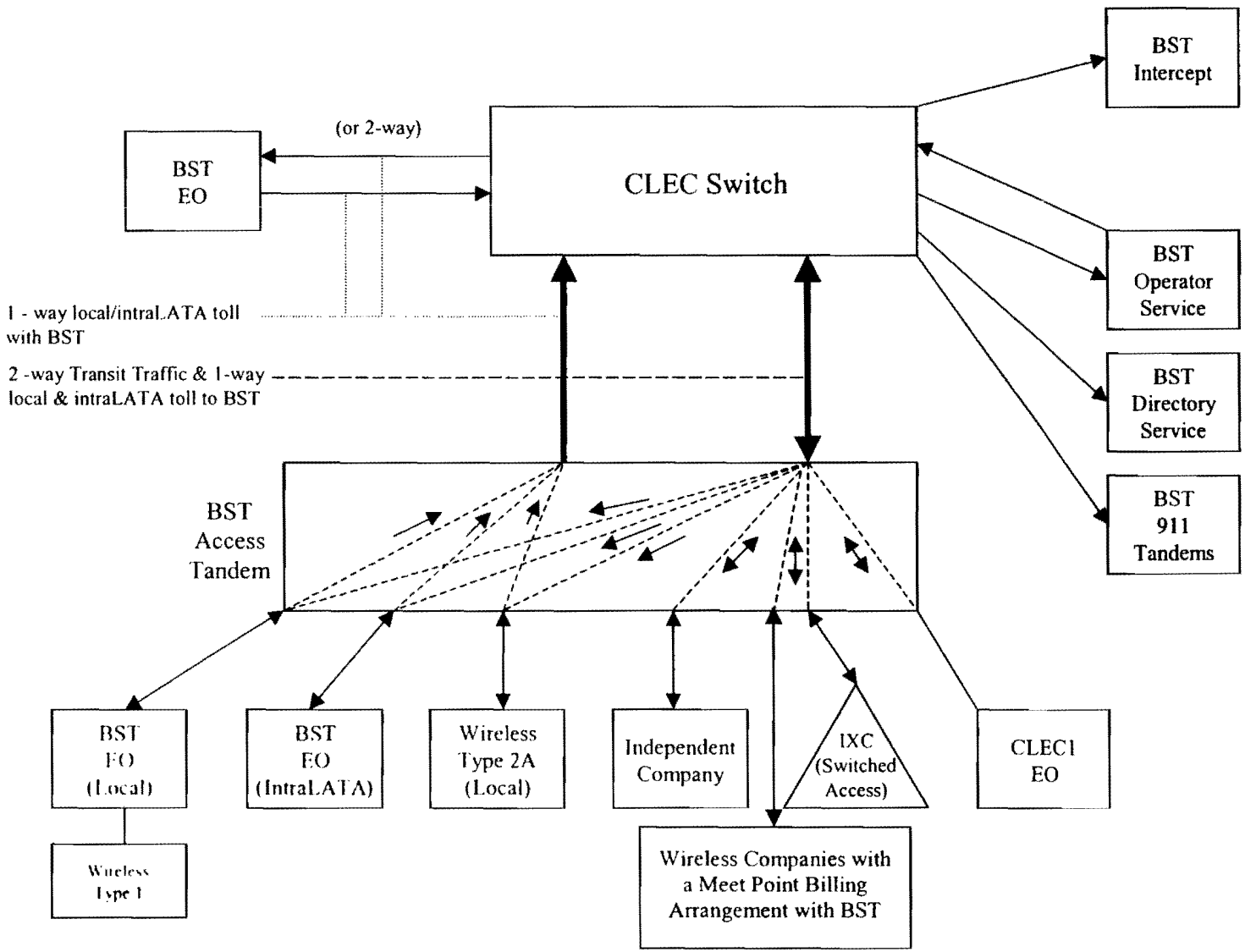

Exhibit C

One-Way Architecture

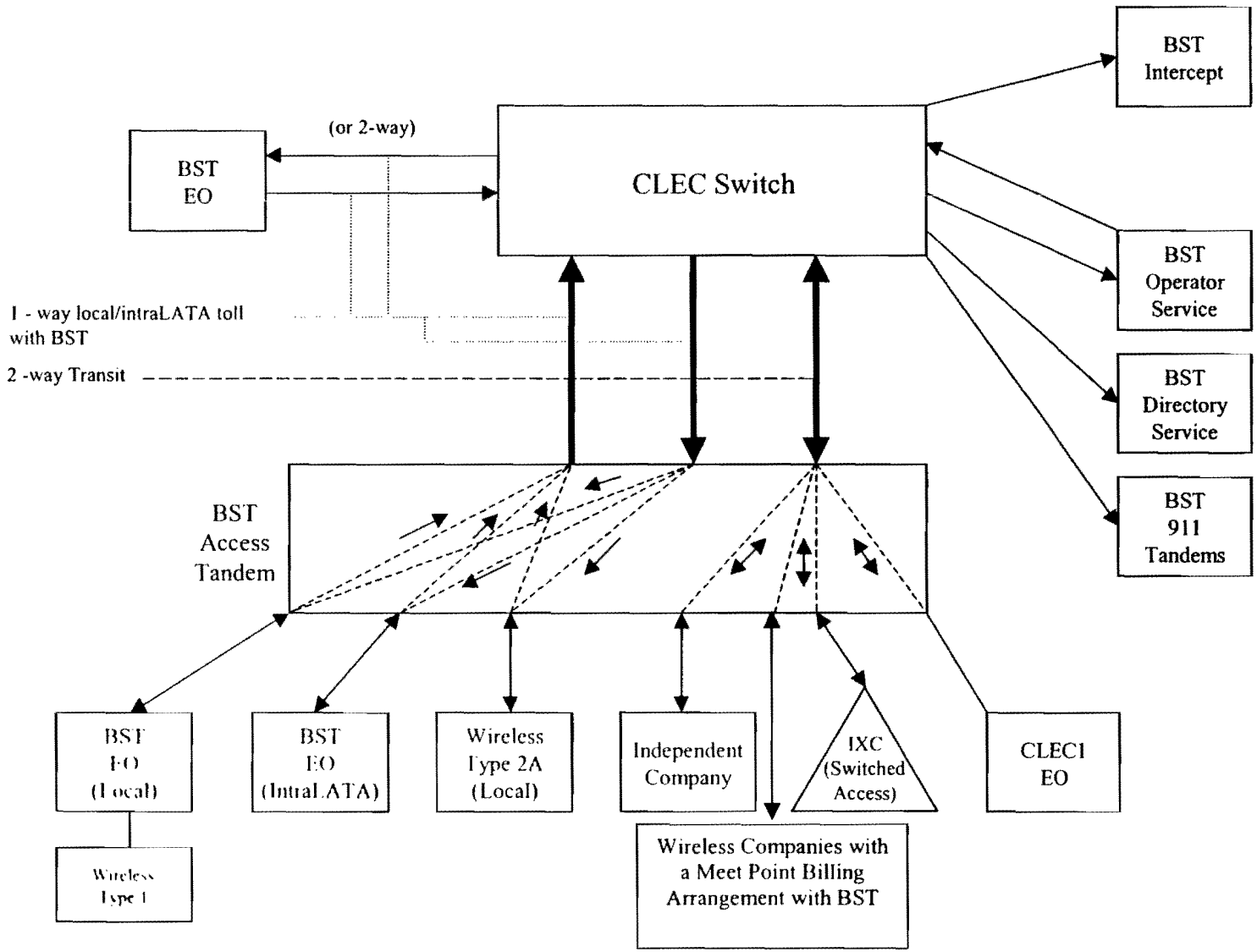

Exhibit D

Two-Way Architecture

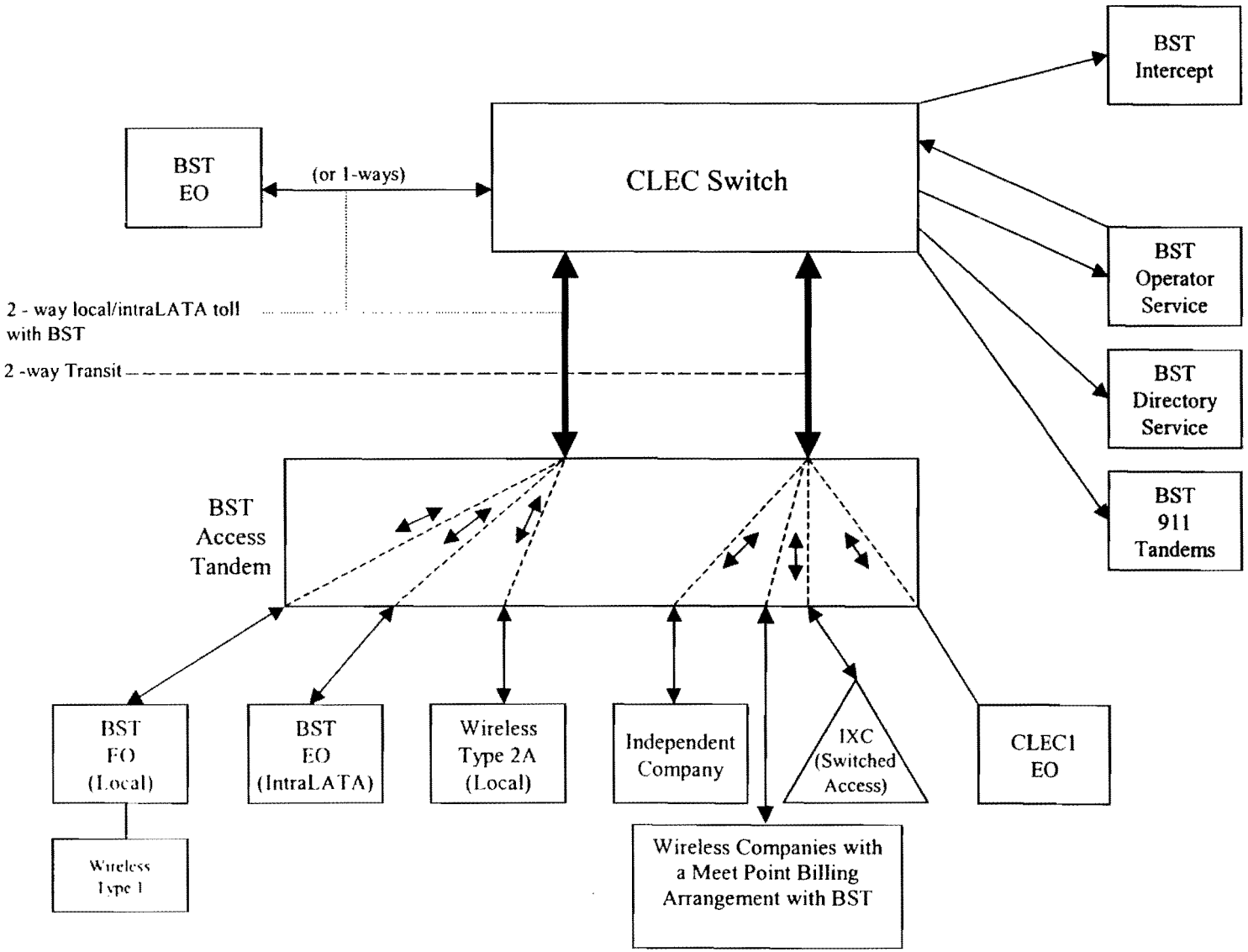

Exhibit E

Supergroup Architecture

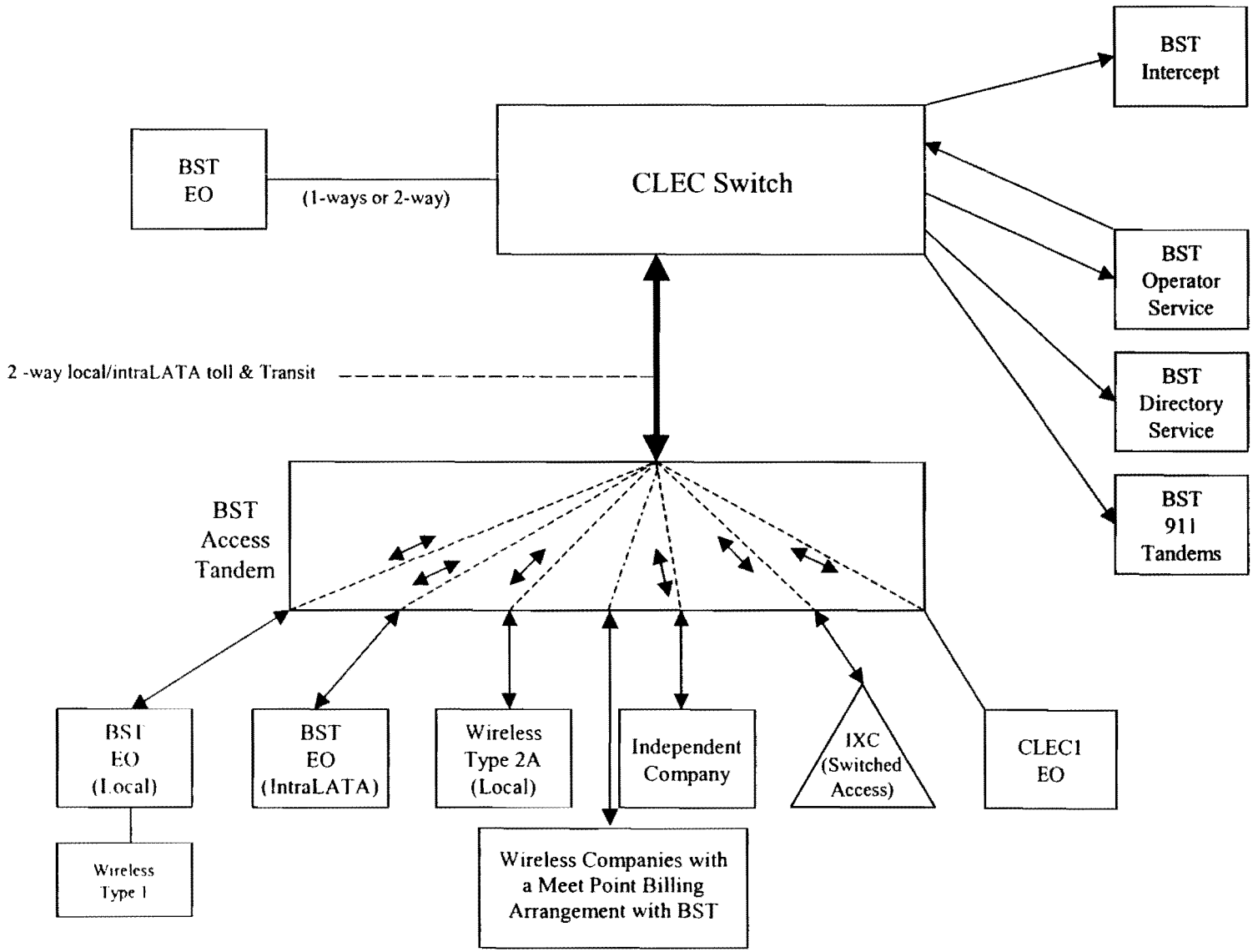

ATTACHMENT 3

LOCAL INTERCONNECTION

DISAGREE:

5.3.1.1
5.3.1.7

OPEN-AT&T

1.2
1.5
1.7
1.8
1.9 – 1.11
2.2.2
2.7
3.2 – 3.5
3.6.7
3.18.1.1
4.13.5.3
5.2
5.3.1.1
5.3.3
5.3.3.1
6

OPEN-BST

1.2
1.4.3
1.4.4
1.5
1.7
1.8
1.9 – 1.11
2.2.2
3.2 – 3.5
3.6.6
3.6.7
3.7
3.8
3.9
4.14.1
5.3.2

FLORIDA PUBLIC SERVICE COMMISSION
DOCKET NO. 020919-TP EXHIBIT NO. 22
COMPANY/ WITNESS. BS/Attch. 3, Local Interconnection
DATE: 05/07/03

22

5/22/01

TABLE OF CONTENTS

1. NETWORK INTERCONNECTION ..... 3~~3~~
2. METHODS OF INTERCONNECTION ..... 5~~5~~
3. INTERCONNECTION TRUNKING AND ROUTING ..... 8~~8~~
4. NETWORK DESIGN AND MANAGEMENT FOR INTERCONNECTIONERROR! BOOKM
5. NETWORK MAINTENANCE ..... 19~~19~~

EXHIBIT A

EXHIBIT B

EXHIBIT C

EXHIBIT D

EXHIBIT E

EXHIBIT F

LOCAL INTERCONNECTION

1. NETWORK INTERCONNECTION

1.1 The Parties shall provide interconnection with each other's network for the transmission and routing of telephone exchange service (local) and exchange access (intraLATA toll and switched access).

1.1.1 BellSouth shall provide interconnection with BellSouth's network at any technically feasible point within BellSouth's network.

1.1.2 AT&T shall provide interconnection to BellSouth at any mutually agreed upon point.

1.2 **[AT&T must establish, at a minimum, a single ~~Point of Presence, Point of Interface, and~~ Point of Interconnection with BellSouth within the LATA for the delivery of AT&T's originated local, intraLATA toll terminated to BellSouth and transit traffic terminated to other than BellSouth.][OPEN-BST/AT&T]** If AT&T chooses to interconnect at a single Point of Interconnection within a LATA, the interconnection must be at a BellSouth access or local tandem. Furthermore, AT&T must establish Points of Interconnection at all BellSouth access and local tandems where AT&T NXXs are "homed." A "Homing" arrangement is defined by a "Final" Trunk Group between the BellSouth access or local tandem and AT&T End Office switch. A "Final" Trunk Group is the last choice telecommunications path between the access or local tandem and End Office switch. It is AT&T's responsibility to enter its own NPA/NXX access and/or local tandem "homing" arrangements into the national Local Exchange Routing Guide ("LERG"). In order for AT&T to home its NPA/NXX(s) on a BellSouth access or local tandem, AT&T's NPA/NXX(s) must be assigned to an exchange rate center area served by that BellSouth access or local tandem and as specified by BellSouth.

1.3 A Point of Presence is the physical location (a structure where the environmental, power, air conditioning, etc. specifications for a Party's terminating equipment can be met) at which a Party establishes itself for obtaining access to the other Party's network. The Point of Presence is the physical location within which the Point(s) of Interface occur.

1.4 A Point of Interface is the physical telecommunications interface between BellSouth and AT&T's interconnection facilities. It establishes the technical interface and point of operational responsibility. The primary purpose of the Point of Interface is to serve

as the terminus for each Party's interconnection facilities. The Point of Interface has the following main characteristics:

OK 1.4.1 1.6.1 4/28 It is a cross-connect point to allow connection, disconnection, transfer or restoration of service.

OK 1.4.2 1.6.2 4/28 It is a point where BellSouth and AT&T can verify and maintain specific performance objectives.

OK 1.4.3 [It is specified according to the interfaces offered in this Attachment 3.] ~~[OPEN-BST]~~

OK ~~1.4.4 [The Parties provide their own equipment to interface with the equipment on the customer premises.] [OPEN-BST]~~

1.5 1.7 4/28 5+1 open **[The Point of Interconnection is the point at which the originating Party delivers its originated traffic to the terminating Party's first point of switching on the terminating Party's common (shared) network for call transport and termination. Points of Interconnection are available at either access tandems, local tandems, End Offices, or any other technically feasible point, as described in this Agreement. AT&T's requested Point of Interconnection will also be used for the receipt and delivery of transit traffic at BellSouth access and local tandems. Points of Interconnection established at the BellSouth local tandem apply only to AT&T-originated local and local originating and terminating transit traffic.] [OPEN-BST/AT&T]** does the earlier Clarke?

OK 1.6 1.8 4/28 The Parties will work cooperatively to establish the most efficient trunking network in accordance with the provisions set forth in this Attachment 3 and accepted industry practices.

1.7 are we OK with new 4/28 1.9 [Each party will be responsible for engineering its network (i.e., the underlying facilities on which trunks are provisioned) and providing any necessary equipment on its side of the Point of Interface.] AT&T, at its option, shall establish Points of Presence and Points of Interface for the delivery of its originated local and intraLATA toll traffic to BellSouth. The Point of Interface may not necessarily be established at the Point of Interconnection.] ~~[OPEN-BST/AT&T]~~ or causing to be provide

1.8 1.10 4/28 Disposition?? **[BellSouth shall designate the Points of Presence and Points of Interface for the delivery of its originated local and intraLATA toll traffic to AT&T for call transport and termination by AT&T.] [OPEN-BST/AT&T]** delete

1.9 **[For the purposes of this Attachment 3, Local Channel is defined as a switch transport facility between a Party's Point of Presence and its designated serving wire center.[open AT&T]**

1.10 For the purposes of this Attachment 3, Serving Wire Center is defined as the wire center owned by one Party from which the other Party would normally obtain dial tone for its Point of Presence.

1.11 **For the purposes of this Attachment 3, Dedicated Transport is defined as a switch transport facility between a Party's designated serving wire center and the first point of switching on the other Party's common (shared) network.] [OPEN-~~BST~~/AT&T]**

2. METHODS OF INTERCONNECTION

2.1 The Parties shall interconnect their networks utilizing one of the following methods in accordance with the provisions set forth in this Attachment 3. at our discretion

2.2 Interconnection by one Party at the premises of the other Party.

2.2.1 BellSouth shall provide collocation to AT&T pursuant to the terms set forth in Attachment 4 of this Agreement, incorporated herein by this reference. AT&T may, at its option, purchase such collocation at the rates, terms, and conditions set forth in Attachrnent 4 of this Agreement, incorporated herein by this reference.

2.2.2 **[AT&T, at its sole discretion, may permit BellSouth to utilize space and power in AT&T facilities specified by AT&T solely for the purpose of terminating BellSouth's local traffic. BellSouth may request installation of both cable and equipment, or cable only. The pricing, terms and conditions of such arrangement shall be pursuant to Exhibit _ of this Attachment 3, incorporated herein by this reference.] [OPEN-BST/AT&T]**

2.3 Leased Facilities – where the Party requesting interconnection utilizes the facilities offered by the other Party. Such leased facilities shall be provided at the rates, terms, and conditions set forth in this Attachment 3. At AT&T's request, it may lease separate facilities for the sole purpose of delivering undipped 8YY traffic from AT&T's end users to BellSouth's Switching Services Port ("SSP") for dipping into BellSouth's toll free database. \ Shld be service switching Point

2.4 Third Party Facilities – where the Party requesting interconnection utilizes the facilities provided by a source other than the Parties to this Agreement. The Party utilizing this option shall comply with industry standards to maintain network integrity and will be solely responsible

for any charges or fees assessed by the third party for use of its facilities.

OK 2.5 4/28 2.1.6

Commercial Intra-building Interconnection – where both Parties have constructed broadband facilities into a commercial building (i.e., a building that is not a telephone central office) and agree to establish a Point of Interface at such location utilizing intra-building cable.

OK 2.6 4/28 2.1.7

"Fiber Meet" is an interconnection arrangement whereby the Parties physically interconnect their networks via an optical fiber interface (as opposed to an electrical interface), at which one Party's facilities, provisioning, and maintenance responsibility begins and the other Party's responsibility ends (i.e., Point of Interface). A Fiber Meet shall be an arrangement as set forth in Section 2.9 of this Attachment 3.

OK 2.7 4/28 2.1.8

Any other method determined to be technically feasible and requested by AT&T shall be done pursuant to the process defined in Attachment 10 of this Agreement, incorporated herein by this reference. Any other method determined to be technically feasible and requested by BellSouth and agreed to by AT&T shall be done. ~~pursuant to [_____.] [OPEN-AT&T]~~

Trunking Arrangement

Trunks

2.8 4/28 2.2 OK to AT&T

Local Tandem Interconnection. This interconnection arrangement allows AT&T to establish a Point of Interconnection at BellSouth local tandems for: (1) the delivery of AT&T-originated local traffic transported and terminated by BellSouth to BellSouth end offices within the local calling area as defined in BellSouth's General Subscriber Services Tariff, Section A3 served by those BellSouth local tandems; and (2) for local transit traffic transported by BellSouth for third party network providers who have also established Points of Interconnection at those BellSouth local tandems.

2.8.1 4/28 2.2.1 OK to AT&T

When a specified local calling area is served by more than one BellSouth local tandem, AT&T must designate a "home" local tandem for each of its assigned NPA/NXXs and establish trunk connections to such local tandems. Additionally, AT&T may choose to establish a Point of Interconnection at the BellSouth local tandems where it has no codes homing but is not required to do so. AT&T may deliver local traffic to a "home" BellSouth local tandem that is destined for other BellSouth or third party network provider end offices subtending other BellSouth local tandems in the same local calling area where AT&T does not choose to establish a Point of Interconnection. It is AT&T's responsibility to enter its own NPA/NXX local tandem homing arrangements into the LERG either directly or via a vendor in order for other third party network providers to determine appropriate traffic routing to AT&T's codes. Likewise, AT&T shall obtain its routing information from the LERG.

OK 3 MTA 4/28

2.8.2 Not withstanding establishing Points of Interconnection to BellSouth's local tandems, AT&T must also establish Points of Interconnection to BellSouth access tandems within the LATA on which AT&T has NPA/NXX's homed for the delivery of Interexchange Carrier Switched Access ("SWA") and toll traffic, and traffic to Type 2A CMRS connections located at the access tandems. BellSouth cannot switch SWA traffic through more than one BellSouth access tandem. SWA, Type 2A CMRS or toll traffic routed to the local tandem in error will not be backhauled to the BellSouth access tandem for completion. (Type 2A CMRS interconnection is defined in BellSouth's General Subscriber Services Tariff, Section A35.)

2.8.3 Bell-South shall pass transit traffic to other third party network providers subtending these local tandems. However, AT&T shall be responsible directly to that third party for all reciprocal compensation obligations. ~~'s provisioning of local tandem interconnection assumes that AT&T has the necessary local interconnection arrangement with the other third party network providers subtending those local tandems as required by the Act.~~

2.9 Fiber Meet

2.9.1 If AT&T elects to establish a Point of Interconnection with BellSouth pursuant to a Fiber Meet, AT&T and BellSouth shall jointly engineer and operate a Synchronous Optical Network ("SONET") transmission system by which they shall interconnect their transmission and routing of local traffic via a Local Channel facility at either the DS0, DS1, or DS3 level and shall be ordered via an Access Services Request ("ASR") in the initial phase of this offering. The Parties shall work jointly to determine the specific transmission system. The parties will work cooperatively to establish joint access to transmission overhead signals and commands for such facilities and software. However, AT&T's SONET transmission must be compatible with BellSouth's equipment in the serving wire center. The Parties will work cooperatively in the selection of compatible transmission equipment and software. Fiber Meet will be used for the provision of two-way trunking unless otherwise agreed to by the Parties.

2.9.2 BellSouth shall, wholly at its own expense, procure, install and maintain the agreed upon SONET equipment in the BellSouth Serving Wire Center ("BSWC").

2.9.3 AT&T shall, wholly at its own expense, procure, install and maintain the agreed upon SONET equipment in the AT&T Serving Wire Center ("ASWC").

OK 2.9.4 2.3.4 4/28

The parties shall mutually agree upon a Point of Interface outside of the BSWC as a Fiber Meet point and shall make all necessary preparations to receive and to allow and enable delivery of fiber optic facilities into the Point of Interface with sufficient spare length to reach the Point of Interface. A Common Language Location Identification ("CLLI") code will be established for each Point of Interface. The code established must be a building type code. All orders shall originate from the Point of Interface (i.e., Point of Interface to AT&T, Point of Interface to BellSouth).

OK 2.9.5 2.3.5 4/28

The Parties shall deliver and maintain their own strands wholly at their own expense. Upon verbal request by either Party, the other Party shall allow access to the Fiber Meet entry point for maintenance purposes as promptly as possible.

OK 2.9.6 2.3.6 4/28

The Parties shall jointly coordinate and undertake maintenance of the SONET transmission system. Each Party shall be responsible for maintaining the components of their own SONET transmission system.

OK 2.9.7 2.3.7 4/28

Each Party will be responsible for (i) providing its own transport facilities to the Fiber Meet, and (ii) the cost to build-out its facilities to such Fiber Meet.

3, 4/28 in version not here 2/1 Dan 2/27

OK 2.9.8 2.3.8 4/28

Neither Party shall charge the other for its portion of the Fiber Meet facility between the ASWC and the BSWC used exclusively for the other Party's local traffic (i.e., the Local Channel). The Parties do not intend to utilize this arrangement for transit traffic.

OK **3.** **INTERCONNECTION TRUNKING AND ROUTING** → MIA, Part II C

OK 3.1 3.2 4/28

The Parties will convert all existing interconnection arrangements and trunks to the interconnection arrangements described in this Attachment in accordance with the following:

OK 3.2 3.2.1 4/28

[Within 45 days of ~~the Effective Date~~either Party's written request, the Parties will mutually develop an operations plan based on sound engineering and operations principles, which will specify the guidelines to convert from the existing interconnection arrangements to the interconnection arrangements described in this Attachment 3. Such guidelines will conform to standard industry practices adopted by and contained in documents published by Industry Forums, including but not limited to, the Alliance for Telecommunications Industry Solutions ("ATIS") and the Ordering and Billing Forum ("OBF").

OK 3.3 3.2.2 4/28

Each Party shall bear its own costs to convert from the existing interconnection arrangements to the interconnection arrangements described in this Attachment.

OK 3.4 3.2.3 4/28 Unless otherwise mutually agreed, the Parties will complete the conversion within one [1] year of the ~~Effective Date~~Requesting Party's written request ~~of the Agreement~~.

OK 3.5 3.2.4 4/28 If, following one [1] year after the ~~Effective Date of the Agreement~~Requesting Parth's written request, there exists any interconnection trunks which have not been converted to the interconnection arrangements described in this Attachment 3, then either Party may invoke the dispute resolution proceeding, pursuant to Section 16 of the General Terms and Conditions of this Agreement, incorporated herein by this reference. ~~[OPEN-BST/AT&T]~~

OK 3.6 3.3 4/28 The Parties will use the following interconnection standards:

OK 3.6.1 3.3.1 4/28 The Parties agree to establish Binary 8 Zero Sum Extended Superframe line protocol, where technically feasible.

OK 3.6.2 3.3.2 4/28 In those cases where either Party's equipment will not support 64K Clear Channel Capability ("CCC"), the Parties agree to establish AMI line coding. Any AMI line coding will be Superframe formatted. DS3 facilities will be provisioned with C-bit parity.

OK 3.6.3 3.3.3 4/28 Where additional equipment is required, such equipment shall be obtained, engineered, and installed to support 64K CCC trunks.

OK 3.6.4 3.3.4 4/28 All interconnection facilities between the Parties will be sized according to mutual forecasts developed per the requirements of Section 4.14 of this Attachment 3 and sound engineering practices.

OK 3.6.5 3.3.5 4/28 Interconnection will be provided utilizing either a DS1 or DS3 interface or, with the mutual agreement of the Parties, another technically feasible interface (e.g., STS-1).

3.6.6 3.3.6 4/28 BellSouth and AT&T shall establish interconnecting trunk groups and trunking configurations between networks including the establishment of one-way or two-way trunks in accordance with **[Exhibit ___ of this Attachment 3, attached hereto and incorporated herein by this reference.] [OPEN-BST to provide list]** 200 lang here - mk charges to 1 & 2 way

OK 3.6.7 3.3.7 4/28 [All terms and conditions, as well as charges, both non-recurring and recurring, associated with interconnecting trunk groups between BellSouth and AT&T not addressed in Exhibit A shall be as set forth in the appropriate Party's intrastate or interstate tariff for switched access services. For two-way trunking that carries the Parties' local and intraLATA toll traffic, excluding transit traffic, the Parties shall be compensated for the nonrecurring and recurring charges for trunks and DS1 facilities at 50% of the applicable contractual or tariff rates for the services provided by each Party. AT&T shall be responsible for

ordering and paying for any two-way trunks carrying transit traffic.] ~~[OPEN-BST/AT&T]~~

OK ~~3.7[The Parties will work cooperatively to assure that reasonable diversity is achieved among the trunk groups between each Party's switches within each LATA.] [OPEN-BST]~~

OK CSU BST ~~3.8~~3.7 3.4 4/28 **All originating toll free service calls for which the end office Party performs the SSP function, if delivered to the tandem Party, shall be delivered by the end office Party using GR-394 CORE format for IXC bound calls, or using GR-317-CORE format for LEC bound calls. [OPEN-BST]**

OK CSU BST ~~3.9~~3.8 3.5 4/28 **[Originating Feature Group B calls delivered to either Party's tandem shall use GR-317-CORE signaling format unless the associated FGB carrier employs GR-394-CORE signaling for its FGB traffic at the serving access tandem.] [OPEN-BST]**

~~3.10~~3.9 OK 3.6 4/28 The Parties shall deliver over any trunk groups groomed for a specific access tandem only traffic destined for those publicly-dialable NPA NXX codes served by: (1) end offices that directly subtend the access tandem; and (2) those providers (including, but not limited to CMRS providers, other independent LECs, and CLECs) that directly connect to the access tandem. Parties agree to route traffic pursuant to the LERG. 3.12 below.

~~3.11~~3.10 OK 3.7 4/28 For BellSouth end offices that do not normally subtend tandem for which calls are routed to that end office on an alternate routing basis, BellSouth will provide AT&T its alternative routing (scheme) arrangements. Where BellSouth utilizes alternative arrangements, it shall deliver any traffic through that alternative routing.

OK ~~3.12~~3.11 3.8 4/28 The Parties shall deliver over any trunk groups groomed for a specific end office only traffic destined for those publicly-dialable NPA NXX codes served by that end office, unless otherwise agreed to by the Parties.

OK ~~3.13~~3.12 3.9 4/28 The source for the routing information for all traffic shall be the LERG unless otherwise agreed to between the Parties.

Say same thing

OK ~~3.14~~3.13 3.10 4/28 Where either Party delivers over the local traffic trunk groups miscellaneous calls (e.g., time, weather, 976) destined for the other Party, it shall deliver such traffic in accordance with the serving arrangements defined in the LERG.

OK ~~3.15~~3.14 3.11 4/28 The Parties will cooperate to establish separate, choke trunk groups for the completion of calls to customers such as radio contest lines. Notwithstanding the foregoing, the Parties agree that where the

Parties' switch has the capability to perform call gapping and other protective network traffic management controls, separate trunk groups shall not be required to carry such traffic.

OK ~~3.16~~3.15 N11 code traffic shall be routed between the Parties' networks pursuant to accepted industry practice (e.g., over local traffic trunks or over separate trunk groups).
3.12 4/28

OK ~~3.17~~3.16 Each Party shall establish procedures whereby its operator bureau will coordinate with the operator bureau of the other Party in order to provide Busy Line Verification/Busy Line Verification Interrupt ("BLV/BLVI") services on calls between their respective line side end users for numbers that are not ported.
3.13 4/28

OK ~~3.18~~3.17 A blocking standard of one-half of one percent (.005) shall be maintained during the average busy hour for final trunk groups carrying jointly provided exchange access traffic between an end office and an access tandem. All other final trunk groups are to be engineered with a blocking standard of one percent (.01). High usage trunk groups shall be sized to an economic CCS parameter mutually agreed to by both Parties.
3.14 4/28

~~3.18.1.1~~3.17.1.1 BellSouth agrees to provide upon request of AT&T, pursuant to Section __ of the General Terms and Conditions of this Agreement, traffic usage data (including, but not limited to, usage, peg and overflow counts) for each AT&T NXX subtending the BellSouth tandem to determine which AT&T traffic by NXX is being blocked. [OPEN-AT&T]
3.14 4/28 AT&T

OK ~~3.18.1.2~~3.17.1.2 Pursuant to Attachment 9, incorporated herein by this reference, BellSouth shall report to AT&T information regarding blocking of interconnection traffic.
3.14.2 4/28

OK ~~3.19~~3.18 The Parties agree to jointly manage the capacity of interconnection trunk groups to encourage the economic deployment of increasingly robust and diverse interconnection between their networks.
3.15 4/28

[3.23 from 4/28 version open to AT&T] 3.23 thru 3.29 open AT&T

OK 4. **NETWORK DESIGN AND MANAGEMENT FOR INTERCONNECTION**

4.1 OK Network Management and Changes. Both Parties will work cooperatively with each other to install and maintain the most effective and reliable interconnected telecommunications networks, including but not limited to, the exchange of toll-free maintenance contact numbers and escalation procedures. Both Parties agree to provide

OK BST We're OK if intex delete/ins to

public notice of changes in the information necessary for the transmission and routing of services using its local exchange facilities or networks, as well as of any other changes that would affect the interoperability of those facilities and networks.

4.2 OK Interconnection Technical Standards. The interconnection of all networks will be based upon accepted industry/national guidelines for transmission standards and traffic blocking criteria. Interconnecting facilities shall conform, at a minimum, to the technical specifications set forth in the applicable industry standard technical references. Signal transfer point, Signaling System 7 ("SS7") connectivity is required at each interconnection point. BellSouth will provide out-of-band signaling using Common Channel Signaling Access Capability where technically and economically feasible, in accordance with the technical specifications set forth in the applicable industry standard technical references. Facilities of each Party shall provide the necessary on-hook, off-hook answer and disconnect supervision and shall hand off calling number ID (Calling Party Number) when technically feasible.

4.3 OK Quality of Interconnection. The local interconnection for the transmission and routing of telephone exchange service and exchange access that each Party provides to each other will be at least equal in quality to what it provides to itself and any subsidiary or affiliate, where technically feasible, or to any other Party to which each Party provides local interconnection.

4.4 OK Common Channel Signaling. Both Parties will provide LEC-to-LEC Common Channel Signaling ("CCS") to each other, where available, in conjunction with all traffic in order to enable full interoperability of CLASS features and functions except for call return. All CCS signaling parameters will be provided, including automatic number identification ("ANI"), originating line information ("OLI") calling company category, charge number, etc. All privacy indicators will be honored, and each Party will cooperate with each other on the exchange of Transactional Capabilities Application Part ("TCAP") messages to facilitate full interoperability of CCS-based features between the respective networks. The Parties will provide all line information signaling parameters including, but not limited to, Calling Party Number, Charge Number (if it is different from calling party number), and originating line information ("OLI"). For terminating FGD, either Party will pass any CPN it receives from other carriers. All privacy indicators will be honored. Where available, network signaling information such as Transit Network Selection ("TNS") parameter (SS7 environment) will be provided by the end office Party wherever such information is needed for call routing or billing. Where TNS information has not been provided by the end office Party, the tandem Party will route originating

exchange access traffic to the IXC using available translations. The Parties will follow all industry Ordering and Billing Forum ("OBF") adopted guidelines pertaining to TNS codes.

OK 4.4.1 BellSouth's Common Channel Signaling Access Service ("CCSAS") allows interconnected carriers to exchange signaling information over a communications path that is separate from the message path.

OK 4.4.2 The transport portion of CCSAS, commonly referred to as a signaling link, is provided via dedicated 56 kbps out of band signaling connections between the AT&T signaling point of interconnection and BellSouth's signaling point of interconnection ("SPOI").

OK 4.4.3 The network termination point where this interconnection takes place is called the Signaling Transfer Point ("STP") port termination.

OK 4.4.4 Charges for signaling links and the STP port termination can be found in Attachment 2 of this Agreement, incorporated herein by this reference.

OK 4.4.5 Each CCSAS signaling connection provides for two-way digital transmission at speeds in multiples of 56 kbps. The connection to BellSouth's STP pair can be made from either AT&T's signaling point ("SP"), which requires a minimum of two links, or from AT&T's STP pair, which requires a minimum of four links.

OK 4.5 4.4.6 4/28 SS7 Interconnection will take place at STP locations that are mutually agreed to by the Parties.

OK 4.6 4.4.7 4/28 Where CCS is not available, in-band multi-frequency signaling will be provided. In such an arrangement, each Party will outpulse the full ten-digit telephone number of the called party to the other Party with appropriate call set-up and Automatic Number Identification ("ANI") where available, at parity.

OK 4.7 4.4.8 4/28 The Parties will provide CCS to one another, where and as available, in conjunction with access to call related databases and Service Control Points ("SCP"), including toll free databases, Line Information Database ("LIDB"), Calling Name ("CNAM"), and any other necessary databases.

OK 4.8 4.4.9 4/28 When the Parties establish new links , each Party shall provide its own STP port termination(s) and charge the other Party for the signaling links as follows

OK 4.8.1 4.4.9.1 4/28 Where the SPOI for the signaling link is at a Fiber Meet, there shall be no compensation between the Parties for the signaling link facilities used.

4.8.2 Where the SPOI for the signaling link facilities is located at the BellSouth Serving Wire Center where the signaling link facilities terminates and AT&T has furnished the interconnection facility, BellSouth will pay a monthly charge equal to one half of the AT&T-provided facility charge according to BellSouth's unbundled rate element for the facility used. Rates for said interconnection facilities shall be as set forth in Exhibit [redacted] in Attachment 2, incorporated herein by this reference.

4.4.9.2 4/28

4.8.3 Where the SPOI for the signaling link facilities is located at the AT&T Serving Wire Center facility where the signaling link facilities terminate and BellSouth has furnished the interconnection facility, AT&T will pay a monthly charge equal to one half of the BellSouth-provided facility charge according to BellSouth's unbundled rate element for the facility used. Rates for said interconnection facilities shall be as set forth in Exhibit A in Attachment 2, incorporated herein by this reference.

4.4.9.3 4/28

OK 4.8.4 Each party is responsible for all facility maintenance and provisioning on its side of the SPOI.

4.4.9.4 4/28

OK 4.9 Implementation of new interconnection arrangements (as opposed to augmentation of existing arrangements), including testing of SS7 interconnection, shall be pursuant to the technical specifications set forth in the applicable industry standard technical references. Each Party will be expected to provide sufficient cooperative testing resources to ensure proper provisioning, including the ability to confirm that AT&T LERG-assigned NPA NXX codes have been opened, translated and routed accurately in all appropriate BellSouth switches. A mutually agreed test calling plan shall be conducted to ensure successful completion of originating and terminating calls.

4.4.10 4/28

OK 4.10 <u>Message Screening</u>

4.5 4/28

OK 4.10.1 BellSouth shall set message screening parameters so as to accept messages from AT&T local or tandem switching systems destined to any signaling point in the BellSouth SS7 network or any network interconnected to the BellSouth SS7 network with which the AT&T switching system has a legitimate signaling relationship.

4.5.1 4/28

OK 4.10.2 BellSouth shall set message screening parameters so as to accept messages destined to/from an AT&T local or tandem switching system or to/from an AT&T Service Control Point ("SCP") from any signaling point or network interconnected to the BellSouth SS7 network with which the AT&T switching system has a legitimate signaling relationship.

4.5.2 4/28

OK 4.11 <u>STP Requirements</u>

4.6 4/28

OK 4.11.1 4.6.1 4/28 BellSouth shall provide message transfer part and Signaling Connection Control Point ("SCCP") protocol interfaces in accordance with the technical specifications set forth in the applicable industry standard technical references.

OK 4.12 4.7 4/28 <u>SS7 Network Interconnection</u>

OK 4.12.1 4.7.1 4/28 SS7 Network Interconnection is the interconnection of AT&T STPs and AT&T local or tandem switching systems with the BellSouth STPs. This interconnection provides connectivity that enables the exchange of SS7 messages among BellSouth switching systems and databases, AT&T local or tandem switching systems and other third-party switching systems directly connected to the BellSouth SS7 network.

OK 4.12.2 4.7.2 4/28 SS7 Network Interconnection shall provide connectivity to all components of the BellSouth SS7 network. These include:

OK 4.12.2.1 4.7.2.1 4/28 BellSouth local or tandem switching systems;

OK 4.12.2.2 4.7.2.2. 4/28 BellSouth databases; and

OK 4.12.2.3 4/28 Other third-party local or tandem switching systems.

OK 4.12.3 4/28 The connectivity provided by SS7 Network Interconnection shall fully support the functions of BellSouth switching systems and databases and AT&T or other third-party switching systems with [note could be A or D/B link] direct access to the BellSouth SS7 network.

OK 4.12.4 4/28 SS7 Network Interconnection shall provide transport for certain types of TCAP messages. If traffic is routed based on dialed or translated digits between an AT&T local switching system and a BellSouth or other third-party local switching system, either directly or via a BellSouth tandem switching system, then it is a requirement that the BellSouth SS7 network convey via SS7 Network Interconnection the TCAP messages that are necessary to provide Call Management services (Automatic Callback, Automatic Recall, and Screening List Editing) between the AT&T local STPs and the BellSouth or other third-party local switch.

OK 4.12.5 4/28 When the capability to route messages based on Intermediate Signaling Network Identifier ("ISNI") is generally available on BellSouth STPs, the BellSouth SS7 Network shall also convey TCAP messages using SS7 Network Interconnection in similar circumstances where the BellSouth switch routes traffic based on a Carrier Identification Code ("CIC").

OK 4.~~12~~7.6 4/28 BellSouth shall offer the following SS7 Network Interconnection options to connect AT&T or AT&T-designated local or tandem switching systems or STPs to the BellSouth SS7 network:

OK 4.~~12~~7.6.1 4/28 A-link interface from AT&T local or tandem switching systems; and

OK 4.~~12~~7.6.2 4/28 D/B-link interface from AT&T STPs.

OK 4.~~12~~7.7 4/28 Each interface shall be provided by one or more sets (layers) of signaling links, as follows:

OK 4.~~12~~7.7.1 4/28 An A-link layer shall consist of two links.

OK 4.~~12~~7.7.2 4/28 A D/B-link layer shall consist of four links.

OK 4.~~12~~7.8 4/28 The Parties agree to implement intraoffice diversity for the signaling links so that no single failure of intraoffice facilities or equipment shall cause the failure of any two links in a layer connecting to a BellSouth STP.

OK **4.12.9** 4.7.9 4/28 <u>Signaling Call Information. BellSouth and AT&T will send and receive 10 digits for local traffic. Additionally, BellSouth and AT&T will exchange the proper call information, i.e., originated call company number and destination call company number, CIC, and OZZ, including all proper translations for routing between networks and any information necessary for billing.</u>

OK 4.~~13~~8 4/28 <u>Trunk Forecasting and Servicing Requirements</u>.

OK 4.~~12~~8.1 4/28 The Parties shall exchange technical descriptions and forecasts of their interconnection and traffic requirements in sufficient detail necessary to establish the interconnections required to assure traffic completion to and from all customers in their respective designated service areas. In order for BellSouth to provide as accurate reciprocal trunking forecasts as possible to AT&T, AT&T must timely inform BellSouth of any known or anticipated events that may affect BellSouth reciprocal trunking requirements. If AT&T refuses to provide such information, BellSouth shall provide reciprocal trunking forecasts based only on existing trunk group growth and BellSouth's annual estimated percentage of BellSouth subscriber line growth.

OK 4.~~13~~8.1 4.8.2 4/28 Both Parties shall meet every six months or at otherwise mutually agreeable intervals for the purpose of exchanging non-binding forecast of its traffic and volume requirements for the interconnection and network elements provided under this Agreement, in the form and in such detail as agreed by the Parties. The Parties agree that each forecast provided under this section shall be deemed "Confidential

Information" as set forth in Section 18 of the General Terms and Conditions of this Agreement, incorporated herein by this reference.

OK 4.13.2 The trunk forecast should include trunk requirements for all of the interconnecting trunk groups for the current year plus the next two future years. The forecast meeting between the two companies may be a face-to-face meeting, video conference or audio conference. It may be held regionally or geographically. Ideally, these forecast meetings should be held at least semi-annually, or more often if the forecast is no longer usable. Updates to a forecast or portions thereof should be made whenever the Party providing the forecast deems that the latest trunk requirements exceed the original quantities by 48 trunks or 10%, whichever is greater. Either Party should notify the other Party if they have measurements indicating that a trunk group is exceeding its designed call carrying capacity and is impacting other trunk groups in the network. Also, either Party should notify the other Party if they know of situations in which the traffic load is expected to increase significantly and thus affect the interconnecting trunk requirements as well as the trunk requirements within the other Party's network. The Parties agree that the forecast information provided under this section shall be deemed "Confidential Information" as set forth in Section 18 of the General Terms and Conditions of this Agreement, incorporated herein by this reference. Each Party shall provide a specified point of contact for planning, forecasting and trunk servicing purposes.

4.8.3
4/28

OK 4.13.3 For a non-binding trunk forecast, agreement between the two Parties on the trunk quantities and the timeframe of those trunks does not imply any liability for failure to perform if the trunks are not available for use at the required time.

4.8.4
4/28

OK ~~4.13.4Signaling Call Information. BellSouth and AT&T will send and receive 10 digits for local traffic. Additionally, BellSouth and AT&T will exchange the proper call information, i.e., originated call company number and destination call company number, CIC, and OZZ, including all proper translations for routing between networks and any information necessary for billing.~~

OK ~~4.13.5~~4.13.4 Both Parties will manage the capacity of their interconnection trunk groups. BellSouth will issue an ASR to AT&T to order changes BellSouth desires to the BellSouth interconnection trunk groups based on BellSouth's capacity assessment. AT&T will issue an ASR to BellSouthBellSouth to order changes AT&T desires to the AT&T interconnection trunk groups based on AT&T's capacity assessment.

4.8.5
4/28

OK ~~4.13.5.1~~4.13.4.1 Either Party may issue a Trunk Group Service Request ("TGSR") to the other Party to order changes it desires to the

4.8.6
4/28

interconnection trunk groups based on its capacity assessment. The Party receiving the TGSR will, within ten (10) business days, respond with an ASR or an explanation of why it believes an ASR is inappropriate.

OK ~~4.13.5.24~~.13.4.2 The Party submitting an ASR will provide complete and accurate tie down inventory assignments in typical industry bay, panel and jack format, or in such other format as the Parties agree, on each order by use of a Design Layout Record. Additional tie down information, such as span information, may be required when applicable.
4.8.7 4/28

OK ~~4.13.5.34~~.13.4.3 The Parties will prepare ASRs pursuant to the industry standard guidelines of the OBF. [When submitting an ASR, BellSouth will identify AT&T's end office in the SEC LOC field of the ASR form.] ~~[OPEN-AT&T]~~
4.8.8 4/28

OK ~~4.13.5.44~~.13.4.4 The Party provisioning the ASR will assign to the requesting Party a location code expressed in CLLI code format that will appear in the Access Customer Terminal Location Field of the ASR.
4.8.9 4/28

OK ~~4.13.64~~.13.5 The standard interval used for the provisioning of additions to local interconnection trunk groups shall be no greater than ten (10) business days, for orders of fewer than ninety-six (96) DS-0 trunks. Other orders shall be determined on an individual case basis. Where feasible, either Party will expedite installation, upon the other Party's request.
4.8.10 4/28

OK ~~4.13.74~~.13.6 Major projects shall be limited to those projects that require the coordination and execution of multiple orders or related activities between and among BellSouth and AT&T work groups specifically relating to: (i) the initial establishment of local interconnection trunk groups; (ii) extending service into a new area; (iii) NXX code moves; (iv) facility grooming; or (v) network rearrangements. If orders that are component pieces of a major project are submitted after project implementation has been jointly planned and coordinated, they shall be submitted with a major project reference. Several orders submitted at one time may not be classified as a major project without the consent of the submitting Party. Each Party will identify a single point of contact that will be responsible for overall coordination and management of a major project through an agreed completion point.
4.8.11 4/28

OK ~~4.13.84~~.13.7 As provided herein, AT&T and BellSouth agree to exchange escalation lists which reflect contact personnel including vice president level officers. These lists shall include name, department, title, phone number, and fax number for each person. AT&T and BellSouth agree
4.8.12 4/28

to exchange an up-to-date list promptly following changes in personnel or information.

OK 4.~~14~~ 9 4/28 Interference or Impairment

OK 4.10 4/28 4.14.1 [Within three (3) business days of receipt of notification of blocking of traffic originated within the other Party's network, the Parties shall determine and begin work to implement reasonable corrective measures in a manner consistent with industry practices.] ~~[OPEN-BST]~~

OK 4.15 4.11 4/28 Local Dialing Parity

OK 4.15.1 4.11.1 4/28 BellSouth and AT&T shall provide local and toll dialing parity to each other with no unreasonable dialing delays. Dialing parity shall be provided for all originating telecommunications services that require dialing to route a call. BellSouth and AT&T shall permit similarly situated telephone exchange service end users to dial the same number of digits to make a local telephone call notwithstanding the identity of the end user's or the called party's telecommunications service provider.

OK **5. NETWORK MAINTENANCE**

OK 5.1 Outage Repair Standard

OK 5.1.1 In the event of an outage or trouble in any arrangement, facility, or service being provided by BellSouth hereunder, BellSouth will follow procedures for isolating and clearing the outage or trouble that are no less favorable than those that apply to comparable arrangements, facilities, or services being provided by BellSouth to itself, Affiliate or any other carrier whose network is connected to that of BellSouth.

5.2 Close Pr mtg. 5/16 **[BellSouth shall provide AT&T at least sixty (60) days' advance notice of any scheduled maintenance activity which may impact AT&T's end users. Scheduled maintenance shall include, without limitation, such activities as, switch software retrofits, power tests, major equipment replacements and cable rolls. Plans for scheduled maintenance shall include, at a minimum, the following information: location and type of facilities, specific work to be performed, date and time work is scheduled to commence, work schedule to be followed, date and time work is scheduled to be completed, estimated number of work-hours for completion.] [OPEN-AT&T]**

OK **5.3 Interconnection Compensation**

6 4/28

Use FLL order

OK 5.3.1 6.1 4/28 Compensation for Local Traffic

5.3.1.1 **For reciprocal compensation between the Parties pursuant to this Attachment, Local Traffic is defined as ~~means~~ any telephone call that originates and terminates in the same LATA except for those calls that are originated or terminated through switched access arrangements as established by the ruling regulatory body~~and is billed by the originating Party as a local call~~ [when the originating Party has its own switch]. [OPEN-AT&T]** Therefore, when an AT&T end user originates traffic and AT&T sends it to BellSouth for termination, AT&T will determine whether the traffic is local or intraLATA toll. When a BellSouth end user originates traffic and BellSouth sends it to AT&T for termination, BellSouth will determine whether the traffic is local or intraLATA toll. Each Party will provide the other with information that will allow it to distinguish local from intraLATA toll traffic. At a minimum, each Party shall utilize NXX's in such a way that the other Party shall be able to distinguish local from intraLATA toll traffic. The NPA's/NXX of the or [illegible] end user shall be the ~~[illegible]~~ sole basis for distinguishing local [illegible] LATA [illegible]

6.1.1 4/28

Issue for Bill & Dave

6.1.2 from 4/28 missing

Local & toll calls will be det. by [illegible] exchange of party

Do we need language.

DISAGREE

AT&T PROPOSAL: As clarification of this definition and for reciprocal compensation, Local Traffic does include traffic that originates from or terminates to or through an enhanced service provider or information service provider.

6.1.3 4/28 Disagree

BST PROPOSAL: As clarification of this definition and for reciprocal compensation, Local Traffic does not include traffic that originates from or is directed to or through an enhanced service provider or information service provider.

6.1.3 New lang 4/28

The Parties recognize and agree that the compensation for the transport and termination of Local Traffic are intended to allow each Party to recover costs associated with such traffic. The Parties recognize and agree that such compensation will not be billed and shall not be paid for calls where a Party sets up a call, or colludes with a third party to set up a call, to the other Party's network for the purpose of receiving reciprocal compensation, and not for the purposes of providing a telecommunications service to an end user.~~As further clarification, Local Traffic does not include traffic that consists of minutes of use from any end user customer that relies upon a call placed by that end user customer or on the end user customer's behalf to establish or maintain a network connection, if: (a) minutes of use to be billed are primarily associated with traffic of a type not routinely and ordinarily recognized by a reasonable person to constitute traffic as a result of a telephone~~

OK

5/22/01

~~call (i.e., voice or data traffic); (b) the end user customer does not control the destination of the call; and (c) the minutes of use do not serve a legitimate purpose that is unrelated to the receipt of reciprocal compensation or any other benefit that may be derived solely from establishing or maintaining the network connection.~~

5.3.1.2 The Parties shall provide for the mutual and reciprocal recovery of the costs for the network facilities utilized in transporting and terminating local traffic on each other's network. The Parties agree that charges for transport and termination of calls on their respective networks are as set forth in Exhibit A to this Attachment.

5.3.1.3 For the purposes of this Attachment 3, Common (Shared) Transport is defined as the transport of one Party's traffic by the other Party over the other Party's common (shared) facilities between the other Party's tandem switch and end office switch and/or between the other Party's tandem switches.

5.3.1.4 For the purposes of this Attachment 3, Tandem Switching is defined as the function that establishes a communications path between two switching offices through a third switching office (the Tandem switch).

5.3.1.5 For the purposes of this Attachment 3, End Office Switching is defined as the function that establishes a communications path between the trunk side and line side of the End Office switch.

5.3.1.6 In the event that AT&T elects to offer service within a LATA using a switch located in another LATA, AT&T agrees to provide the transport for both Parties' traffic between the remote AT&T switch and a point (i.e., a facility point of presence) within the LATA in which AT&T offers service. Such facility point of presence shall be deemed to be an AT&T Switch for the purposes of this Attachment. ~~If AT&T utilizes a switch outside the LATA and BellSouth chooses to purchase dedicated or common (shared) transport from AT&T for transport and termination of BellSouth originated traffic, BellSouth will pay AT&T no more than the airline miles between the V & H coordinates of the Point of Interface within the LATA where AT&T receives the BellSouth-originated traffic and the V & H coordinates of the BellSouth Exchange Rate Center Area that the AT&T terminating NPA/NXX is associated in the same LATA. For these situations, BellSouth will compensate AT&T at either dedicated or common (shared) transport rates specified in Exhibit A and based upon the network facilities provided by AT&T as defined in this Attachment 3.~~

5.3.1.7 DISAGREE

AT&T PROPOSAL: ~~**Neither Party shall represent access services traffic (e.g., Internet Protocol Telephony, FGA, FGB, etc.) as Local Traffic for purposes of payment of reciprocal compensation. "Internet Protocol Telephony" is defined as real-time voice conversations over the Internet by converting voices into data which is compressed and split into packets, which are sent over the Internet like any other packets and reassembled as audio output at the receiving end.**~~

BST PROPOSAL: Neither Party shall represent access services traffic (e.g., Internet Protocol Telephony, FGA, FGB, etc.) as Local Traffic for purposes of payment of reciprocal compensation. "Internet Protocol Telephony" is defined as real-time voice conversations over the Internet by converting voices into data which is compressed and split into packets, which are sent over the Internet like any other packets and reassembled as audio output at the receiving end.

5.3.2 **[Unidentifiable traffic. AT&T shall utilize its NPA/NXXs in such a way and will provide the necessary information so that BellSouth shall be able to distinguish local from intraLATA toll traffic for BellSouth originated traffic. AT&T end users assigned NPA/NXX line numbers shall be physically located in the BellSouth rate center with which the NPA/NXX has been associated. Whenever BellSouth delivers traffic to AT&T for termination on the AT&T's network, if BellSouth cannot determine, because of the manner in which AT&T has utilized its NXX codes whether the traffic is local or toll, BellSouth will charge the applicable rates for originating intrastate network access service as reflected in BellSouth's Intrastate Access Services Tariff. BellSouth will make appropriate billing adjustments if AT&T can provide sufficient information for BellSouth to determine whether said traffic is local or toll.] [OPEN-BST]**

5.3.3 Percent Local Use. Each Party will report to the other a Percentage Local Usage ("PLU"). The application of the PLU will determine the amount of local minutes to be billed to the other Party. For purposes of developing the PLU, each Party shall consider every local call and every long distance call, excluding intermediary traffic. BellSouth shall report quarterly PLU factors to AT&T. BellSouth will accept from AT&T monthly PLU factors provided under the previous agreement until the third quarter of 2001, at which time AT&T shall report quarterly PLU factors. ~~[By the first of January, April, July and October of each year,~~ BellSouth and AT&T shall also provide a positive report updating the PLU. Detailed requirements associated with PLU reporting shall be as set forth in BellSouth's Standard Percent Local

Use Reporting Platform for Interconnection Purchasers, as it is amended from time to time during this Agreement.~~] [OPEN-AT&T]~~ Notwithstanding the foregoing, where the terminating company has message recording technology that identifies the traffic terminated, such information, in lieu of the PLU factor, shall at the company's option be utilized to determine the appropriate reciprocal compensation to be paid.

~~5.3.3.1[Notwithstanding the reporting interval set forth in Section 5.3.3, BellSouth will accept and implement a monthly PLU, for a period of twelve (12) months, whenever AT&T gains an end user whose calling pattern and traffic would likely have an impact on the PLU reported by AT&T or whenever AT&T opens a new calling area or begins marketing local services in a new area. After reporting the PLU monthly for a twelve (12) month period, the PLU reporting will revert to quarterly. Unless the monthly reporting demonstrates that the PLU has stabilized, then the reporting party will continue to report a monthly PLU for an additional six (6) month period or until the Parties agree that the PLU has stabilized, whichever occurs first. In all other instances, the PLU reporting shall be quarterly.] [OPEN-AT&T]~~

OK

5.3.4 Percent Local Facility. Each Party shall report to the other a Percent Local Facility ("PLF"). The application of the PLF will determine the portion of switched dedicated transport to be billed per the local jurisdiction rates. The PLF shall be applied to multiplexing, local channel and interoffice channel switched dedicated transport utilized in the provision of local interconnection trunks. Each Party shall update its PLF on the first of January, April, July and October of the year and shall send it to the other Party to be received no later than 30 calendar days after the first of each such month to be effective the first bill period the following month, respectively. Requirements associated with PLU and PLF calculation and reporting shall be as set forth in BellSouth's Percent Local Use/Percent Local Facility Reporting Guidebook, as it is amended from time to time.

OK From M

OK 6/1/12 4/28

~~5.3.4~~5.3.5 Percentage Interstate Usage. For combined interstate and intrastate AT&T traffic terminated by BellSouth over the same facilities, AT&T will be required to provide a projected Percentage Interstate Usage ("PIU") to BellSouth. All jurisdictional report requirements, rules and regulations for Interexchange Carriers specified in BellSouth's Intrastate Access Services Tariff will apply to AT&T. After interstate and intrastate traffic percentages have been determined by use of PIU procedures, the PLU factor will be used for application and billing of local interconnection. Notwithstanding the foregoing, where the

terminating company has message recording technology that identifies the traffic terminated, such information, in lieu of the PLU factor, shall at the company's option be utilized to determine the appropriate reciprocal compensation to be paid.

~~5.3.5~~5.3.6 Audits. On thirty (30) days' written notice, each Party must provide the other the ability and opportunity to conduct an annual audit of the traffic reported. BellSouth and AT&T shall retain records of call detail for a minimum of nine months from which a PLU and/or PIU can be ascertained. The audit shall be accomplished during normal business hours at an office designated by the Party being audited. Audit requests shall not be submitted more frequently than one (1) time per calendar year. Audits shall be performed by a mutually acceptable independent auditor paid for by the Party requesting the audit. The PLU and/or PIU shall be adjusted based upon the audit results and shall apply to the usage for the quarter the audit was completed, to the usage for the quarter prior to the completion of the audit, and to the usage for the two quarters following the completion of the audit. If, as a result of an audit, either Party is found to have overstated the PLU and/or PIU by twenty percentage points (20%) or more, that Party shall reimburse the auditing Party for the cost of the audit.

5.4 Compensation for IntraLATA Toll Traffic

5.4.1 IntraLATA Toll Traffic. IntraLATA Toll Traffic is defined as any telephone call that originates and terminates in the same LATA and is billed by the originating Party as a toll call.

5.4.2 Compensation for IntraLATA Toll Traffic. For terminating its IntraLATA Toll Traffic on the other Party's network, the originating Party will pay the terminating Party's intrastate or interstate terminating switched access tariff rates as set forth in the effective intrastate or interstate access services tariff, whichever is appropriate. The appropriate charges will be determined by the routing of the call. If BellSouth or AT&T is the other Party's end user's presubscribed interexchange carrier or if an end user uses BellSouth or AT&T as an interexchange carrier on a 101XXXX basis, BellSouth or AT&T will charge the other Party the appropriate tariff charges for originating switched access services.

5.4.3 Compensation for 800 Traffic. Each Party shall compensate the other pursuant to the appropriate switched access charges, including the database query charge as set forth in the each Party's intrastate or interstate switched access tariffs.

5.4.4 Records for 8YY Billing. Each Party will provide to the other the appropriate records necessary for billing intraLATA 8YY customers.

Records required for billing end users purchasing 8YY Services shall be provided pursuant to Attachment 6 of this Agreement, incorporated herein by this reference.

5.4.5 Transit Traffic Service. BellSouth shall provide tandem switching and transport services for AT&T's transit traffic. Transit traffic is traffic originating on AT&T's network that is switched and/or transported by BellSouth and delivered to a third party's network, or traffic originating on a third Party's network that is switched and/or transported by BellSouth and delivered to AT&T's network . Rates for local transit traffic shall be the applicable call transport and termination charges as set forth in Exhibit A to this Attachment. Rates for intraLATA toll and Switched Access transit traffic shall be the applicable call transport and termination charges as set forth in BellSouth Interstate or Intrastate Switched Access tariffs. Switched Access transit traffic presumes that AT&T's end office is subtending the BellSouth Access Tandem for switched access traffic to and from AT&T's end users utilizing BellSouth facilities, either by direct trunks with the IXC, or via the BellSouth Access Tandem. Billing associated with all transit traffic shall be pursuant to MECAB procedures. Wireless Type 1 traffic shall not be treated as transit traffic from a routing or billing perspective. Wireless Type 2A traffic shall not be treated as transit traffic from a routing or billing perspective until BellSouth and the Wireless carrier have the capability to properly meet-point-bill in accordance with Multiple Exchange Carrier Access Billing ("MECAB") guidelines.

6. **[OSS Rates – To the extend AT&T orders a Service and Element for the purpose of interconnection, the OSS Rates set forth in Exhibit __ of Attachment 2, incorporated herein by this reference, shall apply.] [OPEN-AT&T]**

Exhibit B

Basic Architecture

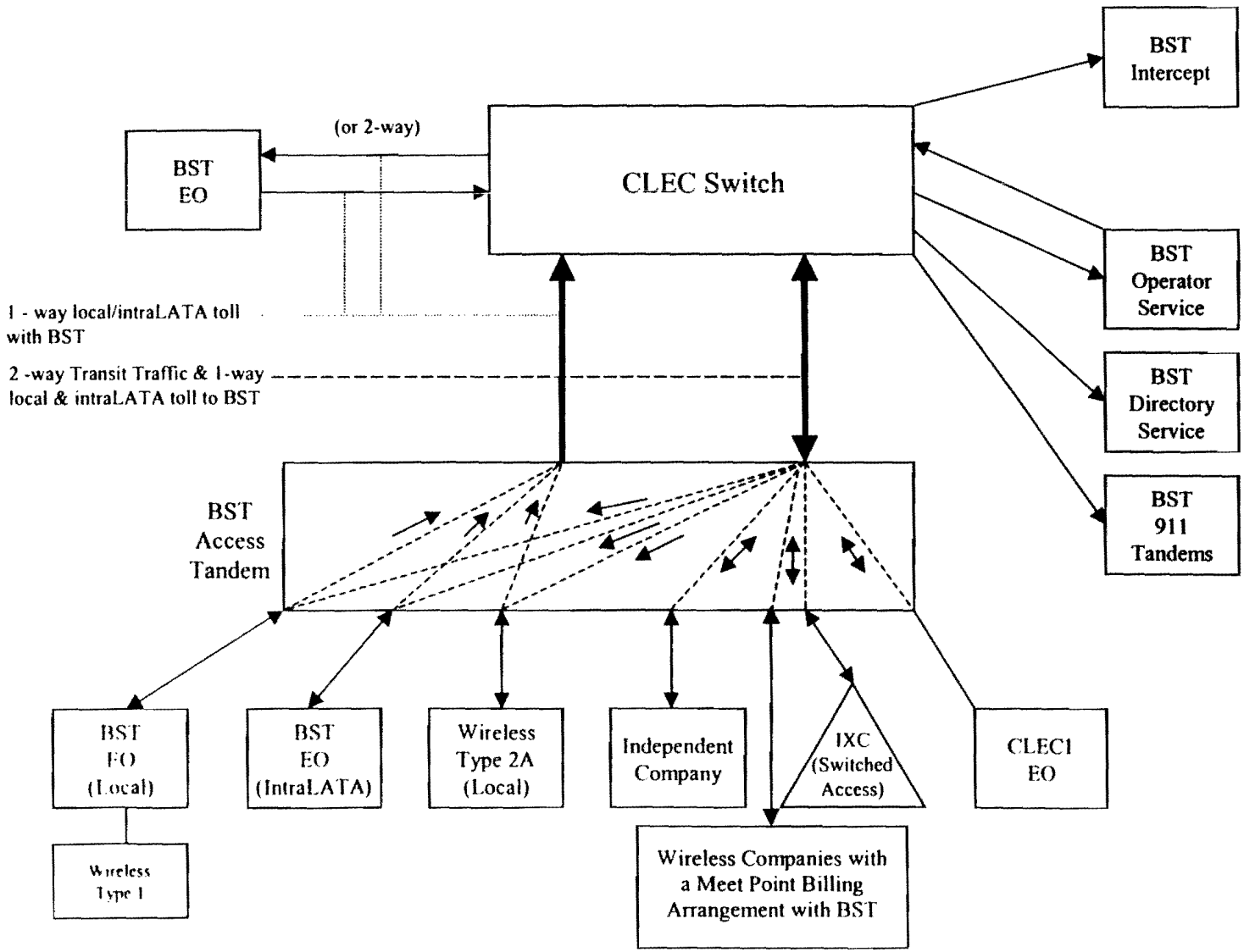

Exhibit C

One-Way Architecture

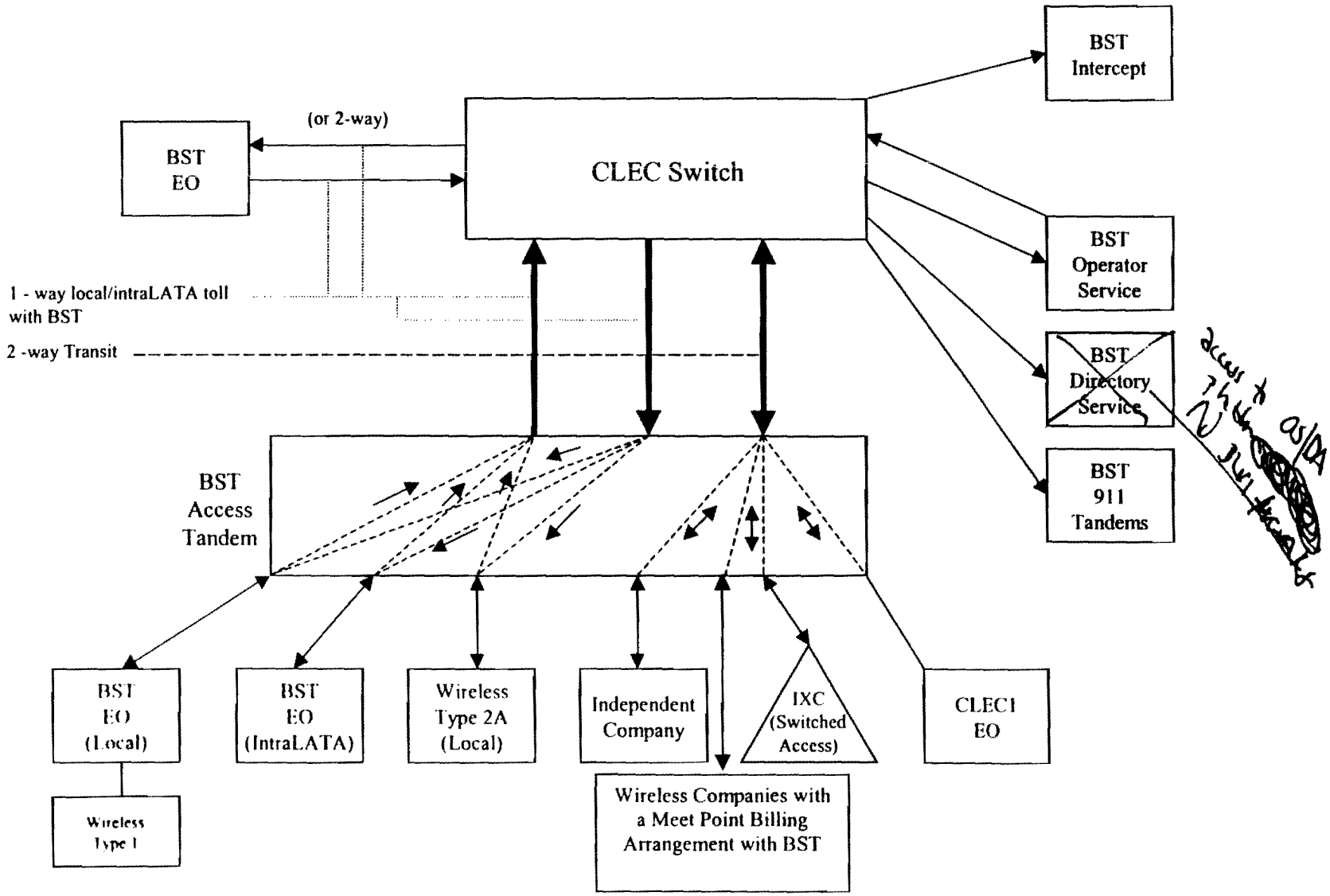

Exhibit D

Two-Way Architecture

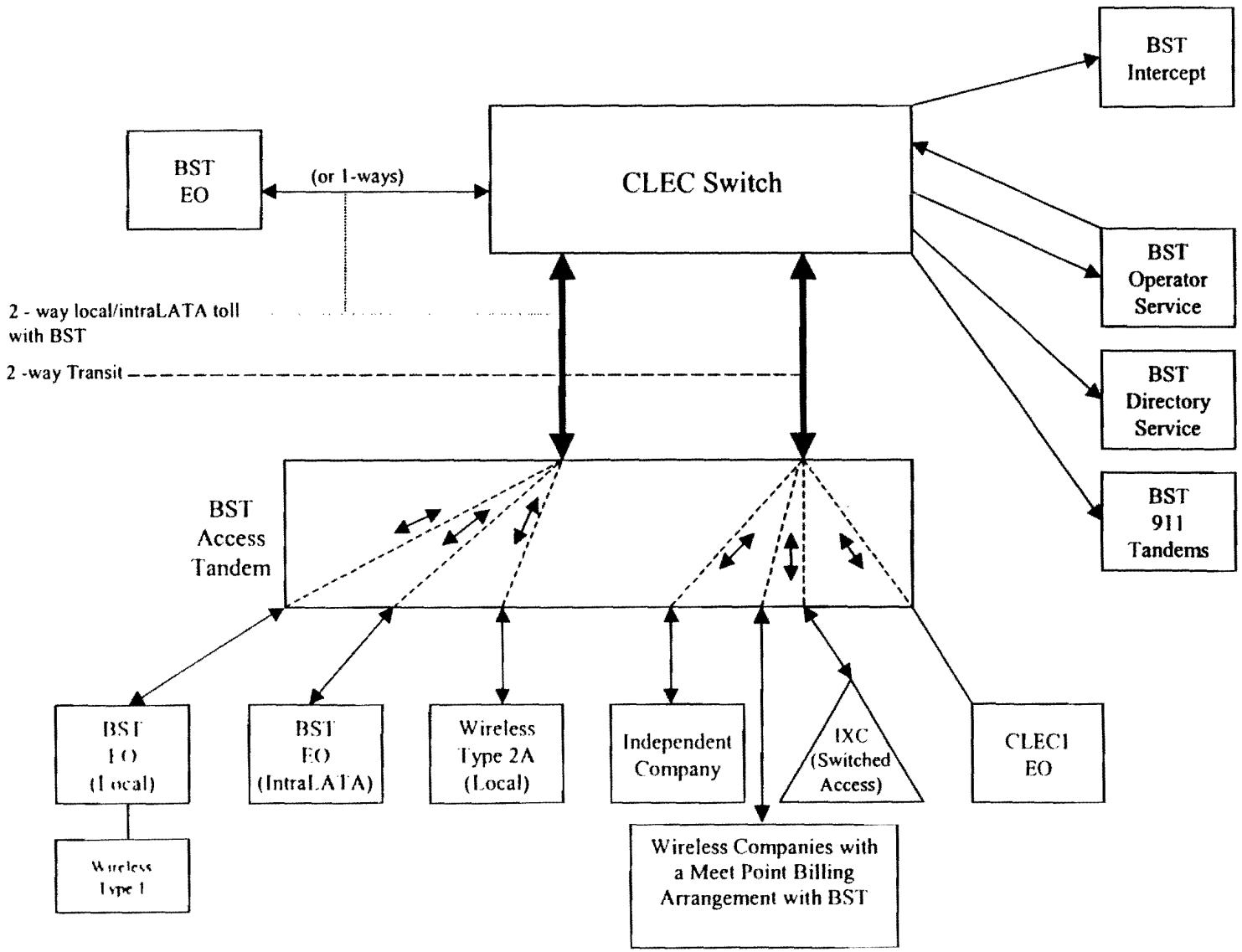

Exhibit E

Supergroup Architecture

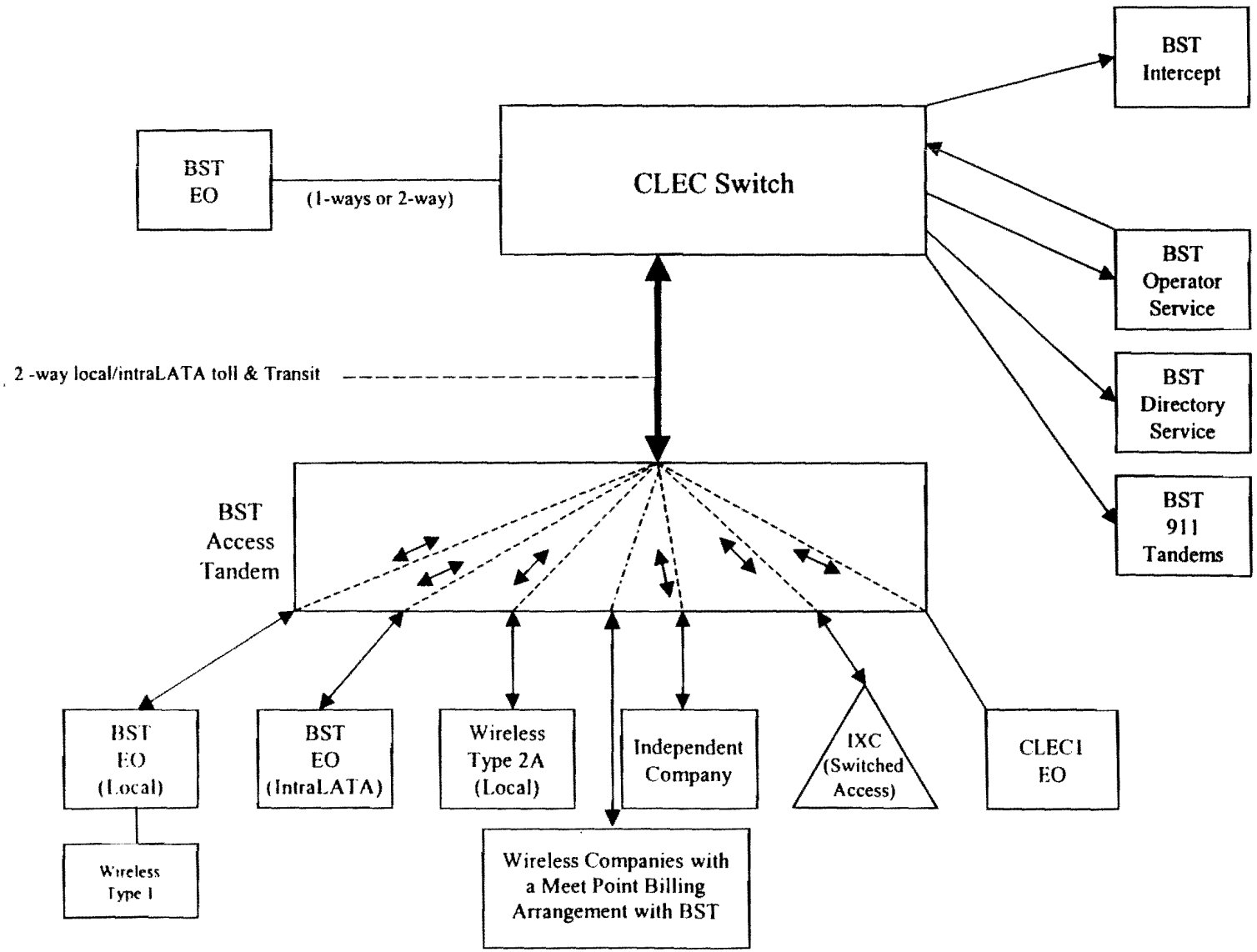

LOCAL TRAFFIC MATRIX

Shiroishi to Peacock July 11, 2001 6:12 p.m.	**5.3** 5.3.1 **5.3.1.1**	**Interconnection Compensation** <u>Compensation for Local Traffic</u> For reciprocal compensation between the Parties pursuant to this Attachment, Local Traffic is defined as any telephone call that originates and terminates in the same LATA except for those calls that are originated or terminated through switched access arrangements as established by the ruling regulatory body when the original Party has its own switch. **[OPEN-AT&T]** Therefore when an AT&T end user originates traffic and AT&T sends it to BellSouth for termination, AT&T will determine whether the traffic is local or intraLATA toll. When a BellSouth end user originates traffic and BellSouth send it to AT&T for termination, BellSouth will determine whether the traffic is local or intraLATA toll. Each Party will provide the other with information that will allow it to distinguish local from intraLATA toll traffic. At a minimum, each Party shall utilize NXX's in such a way that the other Party shall be able to distinguish local from intraLATA toll traffic. **DISAGREE** **AT&T PROPOSAL: As clarification of this definition and for reciprocal compensation, Local Traffic does include traffic that originates and terminates to or through enhanced service provider or information service provider.** **BST PROPOSAL: As clarification of this definition and for reciprocal compensation, Local Traffic does not include traffic that originates from or is directed to or through an enhanced service provider or information service provider.**
Shiroishi to Peacock July 17, 2001 12:54 p.m.	5.3.1. 5.3.1.1	<u>Compensation for Local Traffic</u> ***** Shiroishi adds language that Parties have agreed to compensation for calls to ISPs by agreeing to implement FCC's ISP Order ***** For the treatment of local and ISP-bound traffic in this Agreement, the Parties agree to implement the FCC's Order on Remand and Report and Order in CC Docket 96-98 and 99-68 released April 27, 2001 ("ISP Order on Remand") The Parties further agree to amend this agreement, within sixty (60) days of execution, to incorporate language reflecting the FCC ISP Order on Remand. At such time as that amendment is finalized, the Parties agree to work cooperatively to "true-up" compensation amounts consistent with the terms of the amended language from the effective date of the FCC ISP Order on Remand to the date the amendment is finalized. Additionally, the Parties agree to

EXHIBIT
AT&T Shiroishi
#1 4/25/03
Alexander Gallo Associates, Inc

FLORIDA PUBLIC SERVICE COMMISSION
DOCKET NO. 020919-TP EXHIBIT NO. 23
COMPANY/ WITNESS: BS/ Local Traffic Matr
DATE: 05/07/03
23

		apply a "LATAwide" local concept to this Attachment 3, meaning that traffic that has traditionally been treated as intraLATA toll traffic will now be treated as local for intercarrier compensation purposes, except for those calls that are originated or terminated through switched access arrangements as established by the ruling regulatory body. ~~For reciprocal compensation between the Parties pursuant to this Attachment, Local Traffic is defined as any telephone call that originates and terminates in the same LATA except for those calls that are originated or terminated through switched access arrangements as established by the ruling regulatory body when the original Party has its own switch. **[OPEN-AT&T]** Therefore when an AT&T end user originates traffic and AT&T sends it to BellSouth for termination, AT&T will determine whether the traffic is local or intraLATA toll. When a BellSouth end user originates traffic and BellSouth send it to AT&T for termination, BellSouth will determine whether the traffic is local or intraLATA toll. Each Party will provide the other with information that will allow it to distinguish local from intraLATA toll traffic. At a minimum, each Party shall utilize NXX's in such a way that the other Party shall be able to distinguish local from intraLATA toll traffic.~~ *** **Shiroishi strikes through above language.** ***
Shiroishi to Peacock July 18, 2001 7:27 a.m.	5.3.1 5.3.1.1	<u>Compensation for Local Traffic</u> For the treatment of local and ISP-bound traffic in this Agreement, the Parties agree to implement the FCC's Order on Remand and Report and Order in CC Docket 96-98 and 99-68 released April 27, 2001 ("ISP Order on Remand"). The Parties further agree to amend this agreement, within sixty (60) days of execution, to incorporate language reflecting the FCC ISP Order on Remand. At such time as that amendment is finalized, the Parties agree to work cooperatively to "true-up" compensation amounts consistent with the terms of the amended language from the effective date of the FCC ISP Order on Remand to the date the amendment is finalized. Additionally, the Parties agree to apply a "LATAwide" local concept to this Attachment 3, meaning that traffic that has traditionally been treated as intraLATA toll traffic will now be treated as local for intercarrier compensation purposes, except for those calls that are originated or terminated through switched access arrangements as established by the *** **Shiroishi changes "ruling regulatory body" to "State Commission or FCC"** *** State Commission or FCC.
Peacock to Shiroishi July 19, 2001 2:21 a.m.	**5.3** 5.3.1 5.3.1.1	**Interconnection Compensation** <u>Compensation for Local Traffic</u> For the treatment of local and ISP-bound traffic in this Agreement, the Parties agree to implement the FCC's Order on Remand and Report and Order in CC Docket No 96-98 and 99-68 released April 27, 2001 ("ISP Order on Remand").

		The Parties further agree to amend this agreement, within sixty (60) days of execution, to incorporate language reflecting the FCC ISP Order on Remand. At such time as that amendment finalized, the Parties agree to work cooperatively to "true-up" compensation amounts consistent with the terms of the amended language from the effective date of the FCC ISP Order on Remand to the date the amendment is finalized. ***** Following Underlined Sentences added by Peacock ***** <u>In no event shall this Agreement have any effect on the rates applicable to interconnection traffic and ISP traffic prior to the effective date of the FCC ISP Order or any claims by AT&T against BellSouth for non-payment of such charges. The rates applicable to ISP traffic under this Agreement pursuant to the FCC ISP Order shall in no event be deemed to apply retroactively prior to the effective date of the FCC ISP Order</u>. Additionally, the Parties agree to apply a "LATAwide" local concept to this Attachment 3, meaning that traffic that has traditionally been treated as intraLATA toll traffic will now be treated as local for intercarrier compensation purposes, except for those calls that are originated or terminated through switched access arrangements as established by the State Commission or FCC.
Shiroishi to Peacock July 19, 2001 9:59 a.m.	**5.3** 5.3.1 5.3.1.1	**Interconnection Compensation** <u>Compensation for Local Traffic</u> For the treatment of local and ISP-bound traffic in this Agreement, the Parties agree to implement the FCC's Order on Remand and Report and Order in CC Docket No. 96-98 and 99-68 released April 27, 2001 ("ISP Order on Remand"). The Parties further agree to amend this agreement, within sixty (60) days of execution, to incorporate language reflecting the FCC ISP Order on Remand. At such time as that amendment finalized, the Parties agree to work cooperatively to "true-up" compensation amounts consistent with the terms of the amended language from the effective date of the FCC ISP Order on Remand to the date the amendment is finalized. ***** Shiroishi Deletes two Sentences Added by Peacock on July 19, 2001, 2:21 a.m. ***** Additionally, the Parties agree to apply a "LATAwide" local concept to this Attachment 3, meaning that traffic that has traditionally been treated as intraLATA toll traffic will now be treated as local for intercarrier compensation purposes, except for those calls that are originated or terminated through switched access arrangements as established by the State Commission or FCC.

SWITCHED ACCESS TRAFFIC MATRIX

Shiroishi to Peacock July 11, 2001 6:21 p.m. 5.3.3	**Switched Access Traffic**. Switched Access Traffic is defined as telephone calls requiring local transmission or switching services for the purpose of the origination or termination of Telephone Toll Service. Switched Access Traffic includes, but is not limited to, the following types of traffic: Feature Group A, Feature Group B, Feature Group C, Feature Group D, toll free access (e.g., 800/877/888), 900 access, and their successors. The Parties have been unable to agree as to whether Voice over Internet Protocol (VOIP) transmissions which cross local calling area boundaries constitute Switched Access Traffic. Notwithstanding the foregoing, and without waiving any rights with respect to either Party's position as to the jurisdictional nature of VOIP, the Parties agree to abide by any effective and applicable FCC rules and orders regarding the nature of such traffic and the compensation payable by the Parties for such traffic, if any; provided however, that any VOIP transmission which originates in one local calling area and terminates in another local calling area (i.e., the end-to-end points of the call), shall not be compensated as Local Traffic.
Peacock to Shiroishi July 16, 2001 4:20 p.m. 5.3.3	**Switched Access Traffic**. Switched Access Traffic is defined as telephone calls requiring local transmission or switching services for the purpose of the origination or termination of *** **Peacock "Strike-Out" of Telephone Toll Service** *** ~~Telephone Toll Service~~. Switched Access Traffic includes, but is not limited to, the following types of traffic: Feature Group A, Feature Group B, Feature Group C, Feature Group D, toll free access (e.g., 800/877/888), 900 access, and their successors. The Parties have been unable to agree as to whether Voice over Internet Protocol (VOIP) transmissions which cross local calling area boundaries constitute Switched Access Traffic. Notwithstanding the foregoing, and without waiving any rights with respect to either Party's position as to the jurisdictional nature of VOIP, the Parties agree to abide by any effective and applicable FCC rules and orders regarding the nature of such traffic and the compensation payable by the Parties for such traffic, if any; ~~provided however, that any VOIP transmission which originates in one local calling area and terminates in another local calling area (i.e., the end-to-end points of the call), shall not be compensated as Local Traffic.~~
Shiroishi to Peacock July 17, 2001 12:54 p.m. 5.3.3	**Switched Access Traffic**. Switched Access Traffic is defined as telephone calls requiring local transmission or switching services for the purpose of the origination or termination of ~~Telephone Toll Service~~. Switched Access Traffic includes, but is not limited to, the following types of traffic: Feature Group A, Feature Group B, Feature Group C, Feature Group D, toll free access (e.g., 800/877/888), 900 access, and their successors. The Parties have been unable to agree as to whether Voice over Internet Protocol (VOIP) transmissions which cross local calling area boundaries constitute Switched Access Traffic. Notwithstanding the foregoing, and without waiving any rights with respect to either Party's position as to the jurisdictional nature of VOIP, the Parties agree to abide by any effective and applicable FCC rules and orders regarding the nature of such traffic and the compensation payable by the Parties for such traffic, if any; provided however, that any VOIP transmission which originates in one LATA and terminates in

	another LATA (i.e., the end-to-end points of the call), shall not be compensated as Local Traffic.*** **Shiroishi Adds Last Sentence** This Section [redacted].2 is interrelated to Section 5.3.1.2.***
Shiroishi to Peacock July 18, 2001 7:27 p.m. 5.3.3	**Switched Access Traffic**. Switched Access Traffic is defined as telephone calls requiring local transmission or switching services for the purpose of the origination or termination of *** **Shiroishi adds "IntraLATA Intrastate, Intrastate InterLATA and Interstate InterLATA"** *** IntraLATA Intrastate, Intrastate InterLATA and Interstate InterLATA traffic. *** **Note: Telephone Toll Service deleted from July 16, 2001, 4:20 p.m. "red-line."** *** Switched Access Traffic includes, but is not limited to, the following types of traffic: Feature Group A, Feature Group B, Feature Group D, toll free access (e.g., 800/877/888), 900 access, and their successors. The Parties have been unable to agree as to whether Voice over Internet Protocol (VOIP) transmissions which cross local calling area boundaries constitute Switched Access Traffic. Notwithstanding the foregoing, and without waiving any rights with respect to either Party's position as to the jurisdictional nature of VOIP, the Parties agree to abide by any effective and applicable FCC rules and orders regarding the nature of such traffic and the compensation payable by the Parties for such traffic, if any; provided however, that any VOIP transmission which originates in one LATA and terminates in another LATA (i.e., the end-to-end points of the call), shall not be compensated as Local Traffic. This Section is interrelated to Section 5.3.1.1.
Peacock to Shiroishi July 19, 2001 2:21 a.m. 5.3.3	**Switched Access Traffic**. Switched Access Traffic is defined as telephone calls requiring local transmission or switching services for the purpose of the origination or termination of *** **Peacock Highlights IntraLATA Intrastate For Discussion** *** IntraLATA Intrastate, *** **Peacock moves following language up in the Section.** *** (If BellSouth or AT&T is the other Party's end user's presubscribed interexchange carrier or if an end user uses BellSouth or AT&T as an interexchange carrier on a 101XXX basis, BellSouth or AT&T will charge the other Party the appropriate tariff charges for originating swiched access services.) ~~calls that are routed over switched access trunk groups,~~ Intrastate InterLATA and Interstate InterLATA traffic. Switched Access Traffic includes, but is not limited to, the following types of traffic: Feature Group A, Feature Group B, Feature Group D, toll free access (e.g., 800/877/888), 900 access, and their successors. ~~(If BellSouth or AT&T is the other Party's end user's presubscribed interexchange carrier or if an end user uses BellSouth or AT&T as an interexchange carrier on a 101XXX basis, BellSouth or AT&T will charge the other Party the appropriate tariff charges for originating switched access services.)~~ However, ~~T~~the Parties have been unable to agree as to whether Voice over Internet Protocol (VOIP) transmissions which cross local calling area boundaries constitute Switched Access Traffic. Notwithstanding the foregoing, and without waiving any rights with respect to either Party's position as to the jurisdictional nature of VOIP, the Parties agree to abide by any effective and applicable FCC rules and orders regarding the nature of such traffic and the compensation payable by the Parties for such traffic, if any; provided however, that any VOIP transmission which originates in one LATA and terminates in another LATA (i.e., the end-to-end points of the call), shall not be

	compensated as Local Traffic. This Section 5.3.2 is interrelated to Section 5.3.1.1.
Shiroishi to Peacock July 19, 2001 9:59 a.m. 5.3.3	**Switched Access Traffic**. Switched Access Traffic is defined as telephone calls requiring local transmission or switching services for the purpose of the origination or termination of ***** Shiroishi "Strikes Out" IntraLATA Intrastate ***** ~~IntraLATA Intrastate~~, Intrastate InterLATA and Interstate InterLATA traffic. Switched Access Traffic includes, but is not limited to, the following types of traffic: Feature Group A, Feature Group B, Feature Group D, toll free access (e.g., 800/877/888), 900 access, and their successors. Additionally, if BellSouth or AT&T is the other Party's end user's presubscribed interexchange carrier or if an end user uses BellSouth or AT&T as an interexchange carrier on a 101XXX basis, BellSouth or AT&T will charge the other Party the appropriate tariff charges for originating switched access services. The Parties have been unable to agree as to whether Voice over Internet Protocol (VOIP) transmissions which cross local calling area boundaries constitute Switched Access Traffic. Notwithstanding the foregoing, and without waiving any rights with respect to either Party's position as to the jurisdictional nature of VOIP, the Parties agree to abide by any effective and applicable FCC rules and orders regarding the nature of such traffic and the compensation payable by the Parties for such traffic, if ~~any;~~any; provided however, that any VOIP transmission which originates in one LATA and terminates in another LATA (i.e., the end-to-end points of the call), shall not be compensated as Local Traffic. This Section is interrelated to Section 5.3.1.1.

INTRALATA TOLL TRAFFIC MATRIX

Shiroishi to Peacock July 11, 2001 6:21 a.m.	5.4 5.4.1 5.4.2	Compensation for IntraLATA Toll Traffic IntraLATA Toll Traffic. IntraLATA Toll Traffic is defined as any telephone call that originates and terminates in the same LATA and is billed by the originating Party as a toll call. Compensation for IntraLATA Toll Traffic. For terminating its IntraLATA Toll Traffic on the other Party's network, the originating Party will pay the terminating Party's intrastate or interstate terminating switched access tariff rates as set forth in the effective intrastate or interstate access services tariff, whichever is appropriate. The appropriate charges will be determined by the routing of the call. If BellSouth or AT&T is the other Party's end user's presubscribed interexchange carrier or if an end user uses BellSouth or AT&T as an interexchange carrier on a 101XXXX basis, BellSouth or AT&T will charge the other Party the appropriate tariff charges for originating switched access services.
Shiroishi to Peacock July 18, 2001 7:27 a.m.	~~5.4~~ ~~5.4.1~~ ~~5.4.2~~ 5.3.9	***** Shiroishi "Strikes-Out" Following Language ***** ~~Compensation for IntraLATA Toll Traffic~~ ~~IntraLATA Toll Traffic. IntraLATA Toll Traffic is defined as any telephone call that originates and terminates in the same LATA and is billed by the originating Party as a toll call.~~ ~~Compensation for IntraLATA Toll Traffic.~~ ***** Shiroishi "Strikes-Out" Following Language ***** ~~For terminating its IntraLATA Toll Traffic on the other Party's network, the originating Party will pay the terminating Party's intrastate or interstate terminating switched access tariff rates as set forth in the effective intrastate or interstate access services tariff, whichever is appropriate. The appropriate charges will be determined by the routing of the call.~~ If BellSouth or AT&T is the other Party's end user's presubscribed interexchange carrier or if an end user uses BellSouth or AT&T as an interexchange carrier on a 101XXXX basis, BellSouth or AT&T will charge the other Party the appropriate tariff charges for originating switched access services.
Peacock to Shiroishi July 19, 2001 2:21 a.m.	~~5.4~~ ~~5.4.1~~ ~~5.4.2~~ 5.3.9	~~Compensation for IntraLATA Toll Traffic~~ ~~IntraLATA Toll Traffic. IntraLATA Toll Traffic is defined as any telephone call that originates and terminates in the same LATA and is billed by the originating Party as a toll call.~~ ~~Compensation for IntraLATA Toll Traffic. For terminating its IntraLATA Toll Traffic on the other Party's network, the originating Party will pay the terminating Party's intrastate or interstate terminating switched access tariff rates as set forth in the effective intrastate or interstate access services tariff, whichever is appropriate. The appropriate charges will be determined by the routing of the call.~~ ***** Peacock "Strike-Out" Remaining Language ***** ~~If BellSouth or AT&T is the other Party's end user's presubscribed interexchange carrier~~

		~~or if an end user uses BellSouth or AT&T as an interexchange carrier on a 101XXXX basis, BellSouth or AT&T will charge the other Party the appropriate tariff charges for originating switched access services.~~
Shiroishi to Peacock July 19, 2001 9:59 a.m.	~~5.4~~ ~~5.4.1~~ ~~5.4.2~~	~~Compensation for IntraLATA Toll Traffic~~ ~~IntraLATA Toll Traffic. IntraLATA Toll Traffic is defined as any telephone call that originates and terminates in the same LATA and is billed by the originating Party as a toll call.~~ ~~Compensation for IntraLATA Toll Traffic. For terminating its IntraLATA Toll Traffic on the other Party's network, the originating Party will pay the terminating Party's intrastate or interstate terminating switched access tariff rates as set forth in the effective intrastate or interstate access services tariff, whichever is appropriate. The appropriate charges will be determined by the routing of the call. If BellSouth or AT&T is the other Party's end user's presubscribed interexchange carrier or if an end user uses BellSouth or AT&T as an interexchange carrier on a 101XXXX basis, BellSouth or AT&T will charge the other Party the appropriate tariff charges for originating switched access services.~~

FLORIDA PUBLIC SERVICE COMMISSION
DOCKET
NO. 020919-TP EXHIBIT NO. 24
COMPANY/
WITNESS: AT+T Rebuttal RS-1
DATE: 05-07-03

FLORIDA PUBLIC SERVICE COMMISSION
DOCKET
NO. 020919-TP EXHIBIT NO. 24
COMPANY/
WITNESS: AT+T - Rebuttal RS-1
DATE: 05-07-03

182 /

2/21/01 Collocation Mtg w/ BST

- John Hammon [X]
- Michelle Culver
- Rhona Reynolds - atty

* Security - Provide details of what AT&T ds for security checks
- Don Crosby info →
- Ron Mills

Bernadette Seigler Mtg
UNE P Business Mtg.

2/28 Mtg Trial or real? Or we gvn directive not to sell to cust abv 3 lines?
- What size customers? Ds our contract apply to both bo
* - We'll ask BST if necessary to send both port & loop VSUL. Currently sending just port & working
* Msrd vs Flat rate → told only can we msrd but even if we send Flat → shows msrd on CSR
- LK up def. of ADVE, ODVE, ODVE
* LK at contract for cust care info in regards to cust switching to ATT from another CLEC. TTK w/ Denise Zaliz. → Bill att 6, Sec 3 - Confirm in old contract local acct maintenance

Active W = Full account As Is.
Bell assigned code for moving svc as/is

* Escalation list on website, updated monthly. Should be updated [illegible] If run across error, let [illegible]

CUMENT NUMBER-DATE
02484 MAR 14 8
C-COMMISSION CLERK

184

3/15/01 Mtg w/ BST Leah Cooper, Michael Willi

GA - Termination Liability
ATT - 6 mos. after we can order electronically
BST - Not hpy w/ dec. at all. Appealing order.
w/ ask for stay. Issue in GA+SC
No response by next Thursday. Each ~~co~~ ~~[illegible]~~
submit separate responses.

SC - Michael sending matrix that confirms
what open/closed issues are. Only 4 issues arbit

NC - Motion for Reconsideration must be filed
w/i 30-45 days after order. Not sure i
AT+T w/ file one or not. (April 9)

POI - We have BST's latest language. Wrkn
on response.

OLNS - GA available now. Other states →
Michael → 2Q Leah → YE. Want formal respon
on when available.

NC rvw of order →
Language necessary in POI, tandem. (rate

Bill hold
- Separate agreements for AT+T + TCG
~~[illegible]~~ Get list of state + name for TCG

GTC
Transfer of Exchange - Sec 24.1.2. BST
find agrd to language

attach 1 - No disagrees

www.Interconnection.BellSouth.com

1595 FR424 185

alt 2 * 2.7.1 Don't know why this was not arbitrated. ✓ w/ Greg. Same with 2.9

* 2.11 → BST has language ~~w/ send~~. Straight from the order. We agrd to it in MS. We w/ lk at.

* 3.7.3 Whole UCL issue mvd to cost docket. ✓ last sentence in MS to see how changed.

3.8 Settled, add hot cut language.
3.9.2 Confirm what we did → may hv pulled.
4.3.2. Closed - OK - W/ get MS language. BST's 4.3.2 is our 4.2.1.5 language.

5.2. Subloop Distribution → we show mvd to UNE cost docket. Issue is abt method of access. AT&T may hv language that says rates are subject to outcome of cost docket.

6.3.1.3 - 4 line & over issue. Not part of arbitration. Mvd to UNE cost dkt. Standalone out that AT&T hasn't signed → we hvn't signed. Preference is to pull language from standalone's in here & say subject to outcome of cost dkt. ~~XXX~~ AT&T w/ lk at standalone agree & can bk w/ language.

6.4.1-10 AT&T agrd to BST language in MS. W/ use that here.

att 2 — 7.1 OSDA →
BST wl get us new language. orientire section 7. Wl Kp all Sel Cr Language out of this section.

8.3.1.4.3 ~~[illegible]~~ We accepted language for all 9 states. CLOSE

8.3.1.4.9.1 tkn out → ours is 8.3.1.4.10 → agrd to accept language + rmv AT&T.

8.3.1.5 - TK all out

att 3 — SKIP → Beth nds to rrw. Once see new language wl set up mtg to discuss.

att 4 — Settled → Security issue → Collocation dkt in NC
Condo mvd to cost dkt. Wl get wl Rhona + John

att 6 — Nothing

att 7 — Issue 8 on NC order
3.20 Jay + Milner hv bn exchanging language.
4.2.1 Not arbitrated in NC. Wl ✓ + see status. Rrwd in NC order, pg 7
6 - Deleted in MS. AT&T owes a response to BST.
CCP → qrtly update w/o amendment to contract.

att 8 — No issues

att 9 — Performance → On web. BST wl send up updated pkg. → also on website. Wl also say that we get whatever PSC says we get.
There is also Perf Measure dkt in NC.

Att 13 BAPLO → nd ltr updating contacts on current agree in MS.
BAPLO agreement stands alone.
BST wl ✓ date on + get bk wl Bill.

MS - Signature page → Michael wl send bk to AT&T tmo (3/16). Bill wl get Greg to sign.

Georgia | Lkng at staff rec
Issue 13 - Roxanne wl put together proposed language
Issue - Dkt over, wtng on order

GT&C Sec 16 - Do whatever do in KY
24.1.2 BST get agrd to language.

att 1 Nothing
att 2 2.7.1 → Language that has alrdy bn agrd to
7/25/00 2.11.1 - Lv open for AT&T to rvw
BST nds to add in language (same as in MS)
3.7.3 → MS language on UCL
3.8 Hot cuts → resolved
3.9.2 + .3 - Line Sharing → Mvd to xDLC Dkt 7892-U. Don't think AT&T wnts language (rmv lang) until DLC Dkt over.
4.3.2 - Use MS language
5.2 → We wl rvw whole thing
6.3.1.5 → Go wl BST language → add language about using mkt based rt for cus wl 4 or more lines.

6.4 We're OK w/ this.
Sec 7 - 7.1 → W/ provide reworked language.
8.3.1.4.9 → AT&T agrees. Bill brought up MCI order that says CLEC has access.....
BST w/ see what has proposed & get to us.
MCI lang. ← 8.3.1.4.9.2 → Deleted, 10 still there, 11 deleted
8.3.1.5 - 1.5.11.2 → all coming out
att 3 Tandem language added here
att 4 add Security language, delete condo language w/ wt on order to see interpretation.
att 5 Nothing → Michael w/ V to see if updated LNPG. - 10/99 latest version we have
att 6 Nothing
att 7 Roxanne w/ put lang in 1.1.1 (just like NC)
3.2 See if gs here or att 2. Bradbury & Milner
4.2.1 → use BST language
4.6 + 4.7 → Deleted
6 - AT&T owes response.
att 8 Nothing
att 9

GA PSC website to get BST proposed
1 CA w/ Alltel.

SC → No date set on termination liability.
Just tk out language.

- No recip comp on IP.
- ATT dsn't get tandem rates.

Both bk in ofc 3/19 → try to set mtg
~~for~~ Thursday 3/22 to tlk abt att 3

Objective on ADR is to be sure there are no ?'s
abt process/procedure if cmy to thru.

~~AAG~~ Check att 2 MS contracts for
term language

3/23/01 LSAM Natl. Call

- any prob if we lift edits for non-seq DID #'s. ✓ in ICA's to mk sure we don't hv any language tying vs to sequential. SR is silent on it.
att 5, 2.13 Porting of PNP DID
3 main changes
- SP01
-
-

** att 2/2.13 → Our language 2.11 → compare to see our language to MIA.
Our language come directly from FCC order.

Term liability → FCC has said in 3 orders we are resp. We hv trd to offset costs
** MIA explns process to show revs reduced.
LK at MIA language.

196

4/12/01 BST Mtg Leah, Michael
Bill, Roxanne, Michael

GTC -NC statute → wl use MS language in contract. See GT&C 24.1.2
Cpy of statute gvn to BST

16-Dispute Res - Rox gv lang on. Deleted ref to separate agreement

aH7 aH7- 1.1 - 1.6 for us. CCP lang gvn to BST. (Not doing JTA - Sec 6) Scratch-

This was already 4.5d language. We want our lang plus 12 mos. 4.2.1 ~~Michael gv proposed language to BST.~~ BST wl send internally for review. (Issue 10 on arb order) Finding of Fact

BST filed objection in NC. 4.2.1 (Issue 1) was one of the issues.

aH3 - Bill cvrd mtg. Wl schedule mtg in early May Michael wl send us Beth's dates for avail.

aH3 - IP Telephony 6.1.6 in MS cont addresses point of when using IP protocol wl address issue. For NC AT&T proposal is to use MS lang & add track & trace.

aH2 OLNS, OS/DA - all language shld be available next wk. Keith Milner told Leah that he & Jay hv agrd to most

issues. BST drafting contract language.
Question w/ it default to AT&T or BST.
Either all AT&T or all BST.
OLNS implementation schedule → Leah provided to us. FL next state ordering OLNS. (att 3, 7.2)

W/ amend FL standalone to reflect new OLNS.

att 3 - Tandem IC → obj filed by BST on this issue.
1.3 in NC contract. BST w/ 1K at language.

att 4 Security → AT&T proposes go bk to 99, Rhona going bk to 1K at. Bill volunteered to go up condo if they accept our lang on security.

att 7 - Issues 4.7 - BST tkng bk to client, 4.6 agree to close out. ↳ w/ try to get agree lang

att 2 2.7.1 If new, charge mrk. If existing, use Telric rates. Bill read MS language AT&T w/d agree to temp language until res. of cost dkt. BST w/ draft interim language. Use most of MS lang, site docket.

2.12.8 - Roxanne w/ ✓ order again. We won in SC.

3.7.3 agrd to changes.

198

alt 2 cont.

DSL - after get order in GA, can we negotiate for all 9 states? W/ lk at language again after receipt of order.
3.9.2 Silent until hr order. AT&T wants placeholder that references OK, parties unable to agree.

4.3.2 - OK
5.2 - Working on subloop lang to provide BST.

6.3.1.3 - We suggest pulling in lang from standalone. AT&T w/ send lang we want.

- AGRD TO ALL OTHER CHANGES ON ISSUES LIST FROM BST.

- WLD LIKE ORG CHART ONCE CONSIDERED FINAL

ISP Dispute Resolution - BST was going to ✓ w/ Beth to see what latest pos. is. They w/ ✓ w/ Jerry. AT&T wld lk latest BST prop., what things are tied together.
What are previous + future dates?
Full meal deal settlement

FU on 4/12
Leah call → 3 issues

Hot cut - Darrell said wasn't sure we discussed
implementing right away 5/15 Implement across the board - agreement letter
DSL order across 9 states → Probably, (Steve Kilman)
when get order w/ let us know

SONET language for MCI - Leah has rqstd

* - Send e-mail on standalone
to Michael - hold up is term lang.
Wlng to pull lang pending res. thru arbitration
- FU w/ Roxanne on this b4 gtng w/ Michael Willis.

* Randolph Tel Co. - Run thru HQ again to see if agree or disagree

* Bill + I w/ cl Lillian to discuss what we can/can't do in MS.

204

5/9/01 BST - Beth Shiroshi, Ed Honeycutt, Leah Cooper, Michael W
AT&T Bill, Roxanne, Sam, Michael

8.9 stays consistent for 3 mos b/f establish change for DS3.

• Bill requested info on BST view of their MOVs which wld trigger POIs. Also want them to verify our data. BST wl discuss & see if possible. Traffic data that will trigger nd for 3POI or physical POI.

Wl BST negotiate higher trigger.
8.9 M is exchange of traffic.
(POI)
Billing - Interofc Tran ded per mi per mo. per mileage & facility component (per month fixed)
Billing POI at UNE rates. No recip comp except on PPOI.

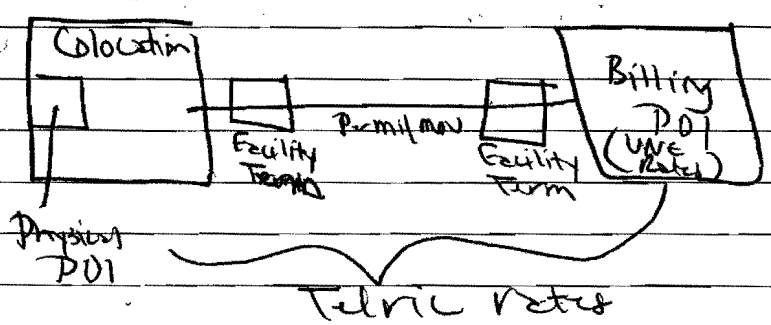

1 charge covers both Fac Term charges

BST lkng at Recip Comp order & hv ?'s abt caps
- Do they include total minute or just transport minute

BST will consider → Footing bill up to 2nd threshold which triggers 8.9 M. We don't pay up until we truly get to DS3 level.

- Section 155 of Order addressing adoption date of recip comp

Dave - Nd to know BST pos on recip comp order. Transport is issue. We can lk at both ways in doing our analysis.

- Sam asked how firm we were on 2 Omni. BST (Beth) suggested may be able to lk at 25 or 30 (in lieu of 20). Beth suggested we cld do this on state level instead of regional deal. AT&T wl submit some mileage scenarios for each state.

ISP Settlement -

In 9/15/00 doc → issue 1 → firm on $1.4M. We are seeing if acceptable. Second piece wld lk at $X for period from where 1 ends until date of order.

AL - is it May or December??

Both sides lkng at what this shld be. Both said shld hv their's by end of wk. Will share numbers. AT&T preference is to settle up to the date of order. BST agrees. AT&T nds to confirm with orders. Wl get bk wl BST. BST can write 3 sep V's or all together. Include Media 1 in settlement. All complaint letters were prior to acq of Media 1.

BST has disputed some of our bills. They'd to decide if payments are inclusive or exclusive of disputed charges.
BST will query what that is.
Bill P. assumes we want 2 issues kept separate.

Bill w/ cl Beth once have our ~~HS~~ to meet again

Brought up track + true up position

Let Beth know if $14M in 1 is acceptable.

attachment 3 - W/ meet Wednesday, all day. Redline by Monday.
AT&T on Tuesday, ~~BST~~ AT&T on Wednesday.

Send Beth. sbiroishi@bridge.bellsouth.com
404-927 8997, att3 NC

Tue agenda - NC

- Everything but att3
- GA → Michael w/ send
- ELTA/TAFI → no center language

alan Sunshine - 404 351 9512
Jim Lamoreux - In place for arb - Dec, Dec - Current

- Michael avail 11 am tmw if wnt to meet w/ Jett

RJ AT Ex Pate into on DSL
(can be trmd) on reg net

208

5/15/01 BST Meeting Leah, Michael
Jeff King, Bill, Roxanne, Sam, Michael

SL1 - Michael → add optain bk in. Go into BST standard language to see language. BST tk out as a stand alone. Section 2 → order coordination

✓ Subloop - SME w/ cm bk w/ counter proposal. hopefully in a.m.
• Michael sent smthg to Bill for Broadband. Bill said not happy with it. Michael requested list of proposed language.

NC
↓↓
No TLG in LA, SC, MS

GT&C ✓ See my blueline

ATT 1 ✓ Pg 15 TK advantage of GA order, No rate per order in NC, TN. FL → w/ lk at standing order + result of cost case to see if addressed. Michael W. confirming NC. Manual charges for NC+FL shld be $0 also.

ATT 2 ✓ 2.7.1 We have prob w/ words "in fact". BST won't use MS lang. because based on premise that we wldn't use certain things. Will propose lang. to each other by Fri, 5/18.
2.10 add tave-up + dkt reference
2.12.8 Jeff King said No PROBLEM. OK.
3.7.4. agrd to change.
3.8.5.7 agrd to change.
3.9.2 BST sending vs standard language on DSL → not in ICA for BST yet.
3.8.2.2.8 ✓ng on version
3.9.3 BST w/ send vs new line sharing language.
6.3.1.3 Use stand-alone, mkt based lang here.

ATT 6 1.2.3 Use MS language.
1.2.2. per use or per unit of vertical
1.11.3 Send Michael language from 4/28.
1.17.2 Send language to Michael
all other stuff OK.

ATT 7 1.1 Split into 2 - consistent w/ MS
1.5 ~~Reference most current CCP here.~~
Change - remove attached hereto.... reference
4.7 W/ change to "best efforts" instead of when possible. Use Michaels lang w/ change

ATT 8 Rmv ref to Exh C. - BST

ATT 9 agree to new.

GA
↓↓ Michael w/ get folks working on subloop lang to interpret what GA order says abt subloop or INC.

- BST w/ go b/c to GPSC to get clarification on Security issue. How many do we think we'nd copies on. BST proposed grng vs M&P's + random sampling.
- Transfer of Exchanges - Reference GA statute
- BST lkng at ADVF - Go b/c to Dan Caldwell grp to lk at ADVF + ODVF
Michael W. agrd to lk at.

210

5/16/01 Leah Cooper, Michael Willis, Beth Shiroshi, Ed Honeycutt
Roxanne, Michael, Bill, Sam

- Opting in to ELL order
- Don't hv answer on whether wl share minutes with us

ATT3 Comparing 4/18 version to 4/28

• ATT checking to see if def at 1.11 is OK (Local Channel - BST considers closed issue)

Version 4/28 2.1.3. AT&T wl provide definition of interconnection traffic to BST that they (BST) will consider.

2.1.8 End at → shall be done.
2.2. Per Dave, dsn't lk objectionable. He wants to lk at further.
2.2.1 Remains open

Version 4/18 2.8.3 BST to provide language from other ICA with different CLEC (Beth)

Version 4/28 3.1-3.2 BST to review and comment to AT&T

3.2.1 Within 45 days of either party's request.
3.2.4 same as above.
3.3.6 ATT to rev to see if wnt Exhibits & reference from 3.6.6 4/18 version
Beth wl send updated diagrams. → include wireless.
3.5 Vng to see if open. BST
3.6 → 3.7 Bill cl Dave abt certain provision he dsn't see.

4/28 3.23 - 3.29 Lv open for AT&T to rvw.
BST Will send new diagrams when include AWS.
4/28 4.10 - BST vng (Beth) to mk sure OK.
4/18 5.3.1.1 BST local, 2 PIC to AT&T is issue Bill + Dave nd to discuss. Clsd lang → wl chng to MS language.
4/28 6.1.1 BST vng to be sure OK. Not in orig 4/18 version.

4/28 6.1.2. Bill + Dave wl talk. Version 4.18 5.3.1.6

4/28 6.1.8 AT&T to provide language to Beth

4/18 5.3.1.7 Beth to provide language.
4/28 6.1.10 - FCC order may hv resolved. BST nds to tk bk + lk at. Hv lang in MS that says lk at, BST wl lk at order + get bk with us.
4/28 6.1.11 Use MS language, Bill agrd OK. Put in PLF.

4/28 6.1.16 BST vng on current lang. wl modify if necessary.

Local Network architecture
Lengthy discussion regarding mileage, 8.9 M minutes, etc. ~~[illegible]~~. Bill askd if wld apply regionally. Bill's concerned that in states wl orders that are better, we shld go with that.

→ Beth wl type up action item list. Hv info to us by COB Tue, 5/22.

~~Bill w/ gt bk to BST w/ date to meet again~~ Mtg w/ BST 6/6 Wed, 9-1 pm.

[redacted] Subloop language mtg 10:30-2, Thursday 5/31.

5/22/01 Network arch call
Mike Lacy, D. Talbott, Allison, Tom Hammond, Paul Gain
Deborah Rosini,

Rptng Requirements: We reqstd BST rpt MOU to us to rectify w/ our bills.
BST constantly disputing their orig minutes to us.

Internet Offhook Switch people
Tom suggesting we tlk with
Tony Culmme

Sign Off
Tony Fera - Network Nancy Kester - Network
Paul Danforth - ?

216

6/16/01 Mark Lindsey, Leah Cooper, Michael Willis, Beth Shiroisi, Ed Honeycutt, Michael Karno, Roxanne, Bill, Sam

- POIs - adding new switches, AT&T w/ see what we can share w/ BST abt new switches. BST w/ lk to put language in contract limiting this so new CLEC's who opt in don't hv open door. Beth suggested putting info in forecasting section under proprietary cover.

- Separate TCG & AT&T contracts
  8.9 M separate for each

- 1.1.1 Beth has issue w/ outside plant + cust prem ~~BST w/ rvw.~~ AT&T w/ rvw order + advise where came from. Will show as eg. instead of w/o limitation.

1.1.2 BST wants to lv open until ID transit traffic. Not accepting our language at this time.

1.2 Wait until resolve 8.9 M issue.
1.5 Strike - agrd by both insert 1.7 S/R version
1.7 OK w/ language
1.8 Lv open.
1.9 Lv open. AT&T w/ clarify BST drawing of LC application w/ Dave Talbott
1.10 OK with new language
1.11 Go bk to Dave Talbott
2.1 - 2.2.6 OK → see Bill's language sheet
2.8 - 2.8.3 - BST agrd to move

2.8.2. - OK with def by BST
2.9.1 - change to Point of Interface, no LC change → just defining what LC is
BST rvw to see if worded correctly for last sentence. AT&T proposed new lang for last sentence. Once BST verifies what it means, w/ probably 1K like our lang. as long as two way → AT&T ✓ w/ Dave Talbott.

3.6.6. Renumber to 3.7 → insert Local Tand Inc language → Head: Trunking arrangements

3.7 and 3.8 OK w/ BST
3.23 - 4/28 OK → resolve w/ diagrams
5.2 BST gv vs new language to rvw.

5.3.1.1 BST w/ rvw our proposed language.

Disagree still there on middle, unnumbered paragraph.

5.3.1.6. TK out center, don't cap AT&T Sw
5.3.1.7 Bill + Keep acceptable, once eff order that governs. BST w/ gv vs some language.
5.3.2 BST rvwng order. Thinks we may be right.

5.3.3. 3Q2001 may hv to be changed.
5.4.5. open

4/28 version 3.24.1 add language requested by AT&T. OK w/ other.

AT&T w/ re-read 3.24 Lang in its entirety & mk sure we are OK. BST wants lang & diagrams

* Gv BST language from MIA Part IIC 1.3 (8YY Language)

~~Transit~~

Local Interconnection Offer

- AT&T w/ gt bk w BST on switch forecast (Bill thinks 5-7)

- BST countered w/ 25 miles. AT&T w/ go bk & 1K at 25 → our cost analysis based on 30.

Incumbent on 25 miles

- Transition → how will we transition for those that alrdy meet/exceed 8.9M

- BST can agree to 1 per LATA first 6 months, 1 per LATA second six months, 2 per LATA thereafter.

U

- OSS Rates - Bill w/ FV w/ Jeff
  King on these.

- Tue, June 19 all Day - Lenox
  Finish NC, Start GA + KY

- ~~Wed, June 20 9:30-3:00 - AT&T~~
  Fri, June 22 9:30-3:00 - AT&T
- Tue, June 26 9:30-4:30 BST Center [Local Pref]
- Tue July 10 9:30-3:30 - Lenox

- ISP Settlement

  - AT&T wants 95% of disputed amount + 95% of interest owed

Melissa Date of Birth
6/9/57 888705
2100
248135944

6/11 Collo Mtg - Rhona Reynolds, John Hamman
Roxanne, Michael, Bill, Darlene, Sam

Northpoint assets → Interim agreements w/ sunset once new agreements are in place.
Although language same, contracts w/ be maintained separately

GT&C - may use abbreviated version from standalones. Collo - use state respective versions of sectg/collo. Billing attachment.
BST lkng at standalone to see how addressed.

Condo w/ not be issue w/ standalone.

For states where we don't hv arb order, won't hv condo language.

FIM - ACNA → Northpoint

Compilation of document - BST is handling.

Names are diff than on agreement already in place. Bill suggested

Get together agn end of this wk to wrap this up. Get bk w/ John.

226

6/19/01 BST mtg Leah, Michael W., Bill, Roxanne, Sam, Michael

- Michael W. grng vs lang on offering LATA wide clng plan as a UNE. Also has lang crrng vertical features - lowered Cmsn ordered rates. 1 flat rate for all features.

Michael provided vs cpy of rate sheets for GA. Has re-formatted. Shld have for all states. Michael wl send electronically.

- Elec LSR rates → Bill advised Michael wl go state specific. ADUF + ODUF → can mark as interim (subject to true UP) until Cmsn rules on new cost studies filed by BST.

GA GT&C 16 - AT&T lang - OK
17.1 add suite #'s 8100 + 12254
attach Disaster Recovery 24.1.2. No to add statute reference. For states w/no statute, see Bill
8.3.1 " marks
Signature change to Greg Terry
(see pg 38)
~~9.3 add calendar~~
* add statement abt cal unless specified
BST thinking abt
Footnote doc as GA 6/19/01
Sec 13 SQM
18.1.1 - 18.1.2 CAPS
a#1 Change Elec LSR charge

a#2 2.7 OK w/ lang
2.11.1, 2, 3 OK to strike
3.4 AT&T OK
3.5 Fix unparamed items in Chart
~~3.9.3.3 Change to Fine Meter~~ 3.9.3.28. Rmv ref to (

Print ISDL + Line Share lang.

3.5 cont. AT&T feels ~~[illegible]~~ per LSR, not end usr.
Delete per end usr. - BST agrd.
AT&T can't agree to lang | | on pg 12
BST w/ re-vamp lang. in brackets.
3.8.3 Deleted + 3.8.4 becomes 3.8.3, OK w/ all new bolded language.
3.10.2 BST submitted new lang. AT&T w/ rvw + respond. 6/15 lang. W/ gr to Ron, shld hv response bk by Friday.
3.10.3 same as abv. AT&T w/ rvw. agrd to cite source.
4.3.2 + .3 - OK w/ deletion + language
5 - Subloops - AT&T provided new lang. Send e-mail file. Rmv GT on UNTW anytime used.
6.3.1.2 + 3 OK
6.3.1.4 - nd clarity. Shld part be platform, define inter-switch.
6.4.10 Rmv open - all lang in 6.4 OK
7 - Bill OK w/ lang up to 8.4.2. of new lang submitted by BST on 6/18.
OK subject to ✓. See doc. for ~~changes~~
✓ FL agreement to mk sure OLNS lang in there.

8.3.1.4.9.1 MCI SONET lang here thru 8.3.1.5.12

AT&T 6 1.6.1 ~~add section #~~ Rmv in section #6
1.1.7 add secty language
1.17.2.1 see copy OK w/ rest
1.19.1 Rmv 800, cannot blk 700
Exhibit E Footnote rates interim

att 7	3.20 Verify Jay OK to mv to ATT 2 1.5 Rmv lang abt att A 3.5 End sentence at website 3.7 Rmv ref to Exh - new lang
NC	GT&C 1.1 Change to 13
att 2 GA to	Rmv 2.9 + renumber 3.8.2.2.8 Rmv ref to Att 2 Exh A 3.7.5.8 - Numbered wrong?? 5 - Michael sending AT&T a clean cpy of Subloop language. Pg 42 4.1.3.2. - # wrong 7 - same as GA
SC	Update foot dates Michael wl hv new ICAs to us by Friday.

230

6/26/01 BST Mtg Michael W., Ed H., Beth, Leah (Lindsey - Int

LATA Wide Calling → Jim Maziar w/ BST wrote. W/ set up call with him.

Media 1 switches → How can we bring up switches into AT&T contract. Michael will find out what we need to do & get bk w/ us.

Power augmentation → Send ltr to Michael abt issue.

---

att 3 Bill w/ go bk to forecasters to determine which switches w/ be in new places (new POI's) and how many are in same place as existing POI # switches is only issue. We accept 25 mi., 8.9 M orig. This w/d be regional offer, including MS. AT&T w/ gt bk by end of w

1.1.1 Use lang from UNE remand
1.1.2 Lv open for BST - wnt to see ID of transit traff
1.2 Bolded lang (6/12) stl open
1.8 Stl open to BST
1.9 AT&T has no local channel, want to charge BST out of our tariff. BST can't agree to this. Sugg md to offer B&Final language. Cmn transport + switching
1.11 Stl open to AT&T
2.1 Rmv "tion"
2.1.2 AT&T OK
2.1.3 AT&T OK
2.2.1 Change to interconnection - assuming we get definition.

2.2.2 AT&T OK
2.3.1 AT&T OK
3.3.2 LV open pending resolution of diagrams
3.14.1.1 - LV open to BST - vrg wrding
3.23 - ~~[illegible]~~ AT&T agrees
OK to put in 4/28 version of 3.23 thru 4
Opng sent "at AT&T's discretion ~~may use~~ following trunk grps may be used ~~others~~, on two way trunking → agree that we wl mutually agree
5.2 BST wl find out how they are actually notifying tdy + propose language.
5.3.1.1 BST wl propose lang that tracks FCC order. We wl try to hv language reflecting FCC order on ISP → AT&T rdy to exchange agrd to exchange language ASAP. AT&T not wlng to rush thru → change of law provision if necessary.
5.3.1.7 - OPEN BST → Linked to ISP. Both parties stl agree to bill + keep.
5.3.2 - BST proposing lang that wl be included in ISP lang.
5.4.5 We'll each hv own language on diagrams.

* We owe definition of interconnection traffic + Provide by COB today. Where we want to use it.

232
KY

Header - Rmv TCG, + disagrees
Preface - Rmv TCG, Def + acr - BST open
24.1.2 - No statute. BST wl add lang we agrd to.
2.7.1 - Use GA lang.
2.9 - Open, see order
2.11.8 - Delete lang at end
3.5. Delete per end user, fix chart

* XDSL → gv BST redline version by COB Friday.
* LATA Wide Lng - BST wl re-work, we wl send fdbk

SEE KY cpy for further open items.

→ Michael wl tk our redline + ask it can be applied to all 9 states.

6/28/01 Thurs - FL DKt
6/28 PSC-01-1402-FOF-TP

SL - att 2, Exh C, Port
att S - Exh A - #Port

234

7/10/01

BST
Leah, Michael, Paula, Karen
AT&T Michael, Bill, Sam, Roxanne
INC - add lang that says "Parties disagree on ___, however we agree to following for ordering

- Michael W. has sm curr comb language she wl share to discuss on Thurs.

- Michael sending LATA wide language to us.

- advsd BST - MCI SONET OK - delete all ded. transport + insert

- ISP - request BST mark-up our version Mtg wl Beth to discuss (possibly conference call)

- xDSL → BST hasn't complted going thru

- Michael W. rng maintenance lang we sent. Thinks response is lang OK.

~~Agenda for Thursday~~:

Network architecture - Michael wl go to Beth to say can we accept settlement lang. for
Reginal → KY, NC, MS, AL, LA, SC, TN | Not for GA & FL
AT&T wl go bk to client to share final lang. + get bk wl BST.

In instances where states didn't address or are addressing in open dkts.
MDU's - Nd to decide what lang wl go into ICA if don't decide by filing ICA. Nd to either hv placeholder + ref dkt or hv BST or other lang + ref dkt.

ISP → Line Sharing → Treat as interim lang as necessary. Not sure whose lang to use. Roxanne → Line Sharing we may hold. Lang wld say "Parties disagree. Wi 60 days parties wl file proposed. If stl don't agree, parties wl file B&F final lang.

7/13/01
ATT 9 - GA + LA Only states with specific orders, we'll just say follow orders. In other states, refer to BST's SQM's.

ATT 4 - BST sent matrix of issues for each state. AT&T has nothing to do.

ATT 3 - Bill wl handle all updates on Net Arch. ISP → Rx recs B&F. In NC where it wasn't arbitrated, Ref FCC order.

Subloop - KY + NC → ref cost dkt, use BST lang

✓ * LK at rate sheets, see if access terminal rates are in there.

✓ * FV x8000 wl Jon → do you hv anything we've agreed to that differs from what FCC order says

✓ FU w/ Owen → NC+KY absolutely
nd response by Monday.
GA - FL - SC

✓ FU w/ Jay on OS/DA lang tdy

7/16/01 Beth + Leah
Bill, Karen, Roxanne

• POIs that exist tdy

2) Wld be wlng not to include #2
in Bill's resp to BST for NC+KY

- BST suggesting whether for 7 states (not 6 more)
Wld the proposal minus

Send Beth counter proposal

7/17/01 Beth w/ redline vs bk, if AT&T didn't
touch it, she didn't

NC Due Thurs 7/19, KY due Fri 7/20

404-B

237

7/18
NC + KY Pricing

Order out of NC → Exceptions filed to order. Not prepared to incorporate exceptions

7/23/01 Jerry Hendrix, Michael Willis

Last spk 6/21, to resolve recip. comp.
Brief due this Thursday.
Last AT&T offer → AT&T/TCG thru 6/1
Pay $36M to resolve issues, rmv forward to implement.
BST last → $29M. (shld go thru 6/14 now)
ATT 3 long for FL + GA, implement FLC order for single rate drop issues w/ cust. interface → not address until 1/1/03.
$31M cash. CIA - not collect anything up to this pt for CIA, but want agreement in place.

- FL - We w/ file motion for extension due to reconsiderations. Extension w/ ask for 14 day trigger.

- GA - Due 14 days after wrtn order in arbitration ( )

- NC + KY

8/1/01 Michael, Leah

POI - Thinks ~~the~~ that are OK w/ 4, Beth may hv 1 counter. We wl wait to receive.

ISP - ED may hv redline bk by end of wk.

Michael wl cl Ed → hold off on generic ISP lang, get concensus on Roxanne's lang.

Subloop → Go over lang on Friday → doesn't fix just 60 day language Michael wl receive

Line Sharing / Line Splitting →

are we in agreement that goal is to have language in. Leah responded yes, but wl lk to.

240

8/1/01 Phil Tongue org → Kim Gaddy

- Send ICA + issues list to Pat Patello once finalized. (mtd) to do by 8/10.

- Forward PSL to Mellory

8/9/01 Mtg w/ BST Michael W., Leah
Phone: Jerry Hendrix.
AT&T: John Blimmell, Bob Rivera - Phone
Roxanne, Michael K., Bill, Sam

Dir. Listing Changes to record → Carrier ownership changes to AT&T. Bill → Don't believe any work done by BST → no evidence given to us to indicate changes. Jerry → Highlight work activities done to change → Bill → Show us, but then indicate where tariff or ICA shows that's what we pay for. Don't believe changing carrier ownership is part of list of things we pay secondary listing charge for.

Not GA or FL

Leah → arbitrated issue in other states → Bill → we'll ✓ arbitration -
Jerry → BST wl not mv off of position but wl send us add'l info.
Michael W. confirmed SRC order wl not be cut off.

BST wl bring info to 8/16 mtg.

Tandem Interconnection

Jerry → BST requesting we provide info to BST indicating areas we serve.
Bill → For both GA + FL, we will provide maps indicating coverage.
John B. → shld hv GA by end of today.
Michael → asked abt retroactivity → Jerry's initial take is not retro.

We w/ exchange data on 8/16.

Subloop Outstanding Issues
Special Construction
access at vault to UNTW / Riser
Who obtains property owner permission to build
Who pays after req. to activate

Power augment Discussion

(CLEC negotiations)

BST: Steve Martin, Verndale, John Hamman, Jim Tamplin
Lhona, Bill Darwin (product mgmt)
AT&T: Sam, Michael K., Roger, Jeff King, Bill Peacock

FL - 27 properties, 14 more mostly in NC & other
BST to ✓ true up from old $3+ to new $6+ crrd by order
5 GA, 1 AL, 4 NC, 1 KY, 1 TN.

Verndale + Roger w/ wrk together on this.

8/17/01 Mtg w/ BST Michael, Leah
Bill, Roxanne, Roberta

- ✓ Elec rates w/ Jeff King for FL

- POI discussions to designate POI - both parties w/ work on gtng mtg together AT&T w/ put in ltr. W/i wk we'll set up mtg date.

- ISP redline coming bk from BST

- Collocation - 2 yr, AT&T won condo
Get Sam to f/u.

- Copies of Northpoint standalone

- Michael W gtng w/ her LCP people to mk sure manual is updated to reflect FL changes.

- Michael w/ send elec version of amendments

9/17/01 Michael W.

- Sending msg. to SME's for mtg nxt wk to discuss subloop for other states

- Line Sharing - Don't think alot of outstanding issues. Stl think can hv regional language.

KY → mvd to cost dkt → process is what it is
NC → "
MS → Process is what it is

Bill Peacock
CNAM Agreement - Bill wl forward msgs
Want us to negotiate CNAM agreement
Michael K → rvw wl him. Previous lang was BST's standard.
NC, GA, FL → priority states

- ISP
Paul Cain → fax language to him
Know that BST & AT&T hv agreed to mirror FCC rates for both local & ISP. Lot of orig lang not necessary. For 2001, BST proposes pay for every min, regardless of local or ISP (not capture 3 to 1 ratio) Feb 2002, parties meet. See if BST overpaid us. Don't think AT&T wl go over 3 to 1 until Nov or Dec. No massive payment

Sec. C.2 Ray Sinclair & BST working on to see if any changes to para.

Ed Honeycutt

9/19/01 MI Switch Transition Patty, Ellen Schmidt - NJ
Ann Smith, Denise Berger - Atl

all facilities & cirktry that goes bk to LEC are coming over to LNS network
(all Telephony based switches & facilities)
Name changes also simultaneously going on in L+GA world

Payable wl be cmng to Alpha or Staten Island centers.
Receivables wl be cmng from standard location

- May hv change in dates on transitions of MI switches. May here on 9/20 call.

9/20/01 Leah, Michael W., Michael K., Sam

Leah - Out from Nov 5 thru Dec. Nds to wrap-up.

- AL → hoping for order in December → per Leah. Wl lk to see what we hv in AL arb dkt, see if we can close w/o order.

NC - subloop, currently combined, Line Sharing
Rvw order on exceptions, forward to BST.

Don't nd to file ltr in NC because lang. actually says 60 days after motion settled.
KY - File ltr, BST wl sign & cpy vs. ltr filed tdy
GA - Subloop language complete. Same ltr for 11/8.
Conforming agreements - BST opposed to this
Want to file comprehensive attachments

Line Sharing - assume regional, AT&T wl confirm. Rates must be interim.

Hot Cut Process Improvement - Michael K. wl rvw & get bk wl Leah

Remote Site Collo - AT&T recvd lang. Not prepared to rvw or hold up DSL lang. - wnt ref in DSL documents. Agree all provisions shld be in collo.

9/20/01
Media | Switch Transition

Definitely not going to mk 9/28 date. I'd to communicate to them immediately not happening. Denise wl go bk to BST & advise. The earliest date for Jax is 10/12. Wl hv firm date wli a wk from today.

9/25/01 Subloop Language - Michael W, Leah, Paula

apply for KY + NC now, differences for FL
BST - wld be agreeable for 7 state language
GA language - delete first 2 para's in language.

UNTW on 9/25 is proposed replacement

- Delete def UNTW, alrdy cvrd in def
- BST prefers mutually agreeable language for advance request (90 days) or 90 days (we will ✓)
  Regional - 7 states

ISP Compensation

* New 1.2 language - Jim Maziar met w/ Ray S. cple of wks ago. Explain call flows.
  Jim sending to AT&T, cpy Ray

* Change all recip to intercarrier
* Ed sending us language on annual rvw instead of quarterly
* Ed rvwng 1.5.2.1-3 - agrees to rmv state lang subject to ✓
* 1.5.2.4 - Ed wl get bk with us. Considering putting bk in.
* 1.5.3 (second one) Ed wl think abt + gt bk
  BST ~~$~~ proposes lvng struck.
  1.6 Ed wl tlk over again with his folks
  1.8 Kp lang subject to AT&T ✓ BST suggested may not need

10/3/01 Michael W., Leah BST
Sam, Bill, Michael, Ray Sinclair AT&T

- Combining contracts → sending joint & sev liab lang to NJ to approve. BST wants our contracts together. Wld nd to work thru POI issue if combine contracts. M1 wld TCG agreement.

- MDU issue in FL clsd out.

include

- Rvwd Subloop - few outstanding issues
- " KDSL - few outstanding issues
- ISP →

10/10/01 ISP Discussion w/ BST
- ED, Beth, Leah, Michael
- Roberta, Michael, Sam, Jeff King, Bill

— 1.5.2.1 BST still argues that FCC order allows for ability to use lower of state rates. AT&T - we agreed during nego that it will be FCC rates as stated. BST prob is that in TN & FL, state rates are lower than FCC.
→ SUGGEST WE FILE "Best & Final"

— 1.6 Best & Final language as well
Bill gv them info from Jerry Hendrix ltr of 9/19 to Greg Terry where he specifically outlines FCC rate caps.

— LATA wide calling

- BST sub pld to AT&T for LD, AT&T pays switched access on orig or term

— AT&T wl file something on Monday, 10/15 regardless.

11/1/01 BST - Ed, Michael, Leah, Beth
AT&T - Michael, Sam, Bill, Ray, Jeff

- Rhona not available.

- Intent of call is to formulate plan for negotiations. Rhona nds to be brought on board.

- AT&T position is still the same as what it was on our last conversation.

- AT&T would like to resolve w/i 30 days if possible. Don't want to wait out 60 days.

- Email Michael with proposed dates.
We suggested 8, 9 + 12

- BST position is 60 days is for negotiating ISP FCC Order, not trying to add new lang on call flows. It will include def of latawide

AT&T w/ send formal requests to BST to begin. W/ send to Michael. W.

258

11/9/01 MediaOne switch Transition

AT&T - Roberta, Ann Smith, Michael K., Bill
BST - Jan Flint, Michael W., Rhma Reynolds, Billing group, Michael Moore

Bill → BST aware of our desire to transfer ownership of AOCN code (6040) changed to 7125 (TCG) assoc. OCN + ACNA's w/ now be assoc w/ 7125.

→ LATA Wide Local ←

11/16/01 BST: Ed H., Beth S., Rhma R., Shelly Decker
AT&T: Jeff K., Ray S., Bill, Sam, Michael

Beth - BST understanding that ATT3 is Facil Based → Both hr own network + interconnect
ATT2 - UNEP.
Bill, Ray, Jeff - agree this is OK
FBased defined by Beth as Not using BST facilities (switching). For us, that means LNS + ALD are FB.

- Beth + Ed agreed we had closure on F2C Cap + 50% lang by adding ref to mid yr settlement. BST w/ put lang in + resend to us.

FB only

- Beth made clr that offering right now is for Fac Based.

BST interprets that lang says "anything" over switched access stays. Beth brought up as if.

point that AT&T orders all as switched access lines and they can hold us to that via contract language.

BST agrd: Fac Based

- AT&T local EU → LPIC'd to BST mks It call → term to BST EU
AT&T bills both orig

Fac Based It IntraLATA

1

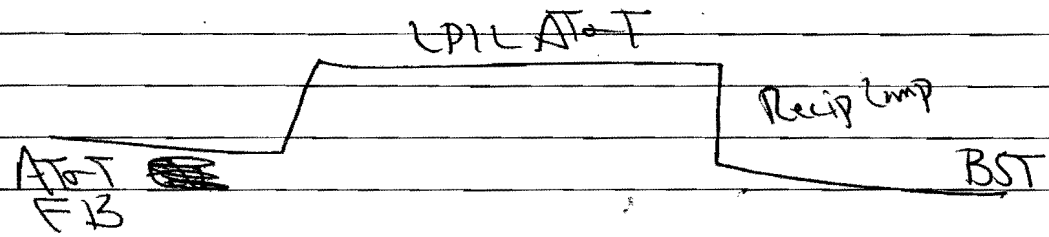

2

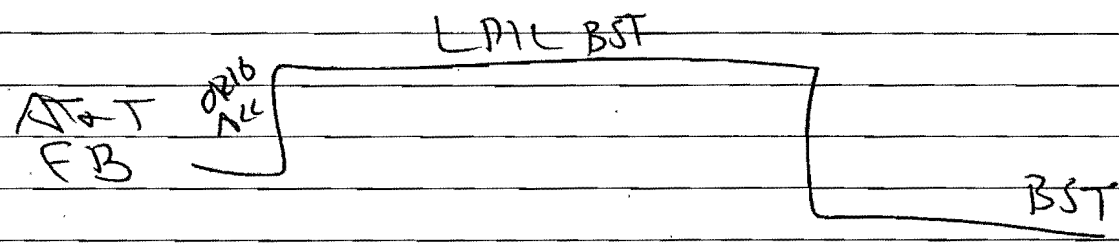

3

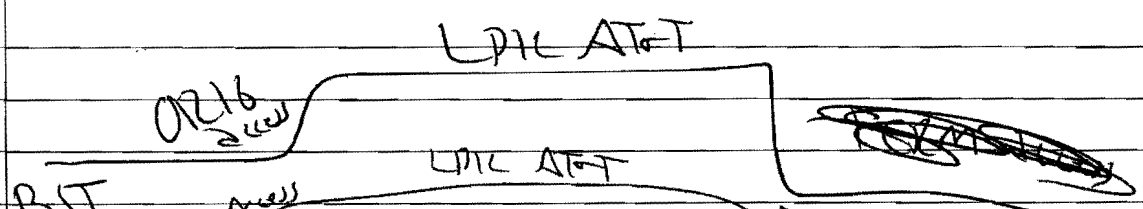

3B

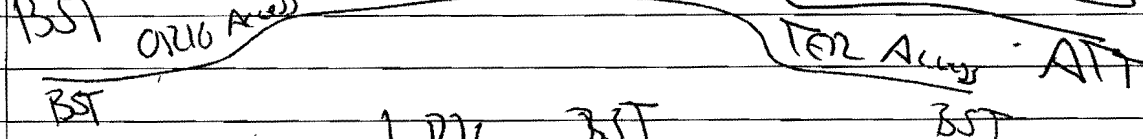

4

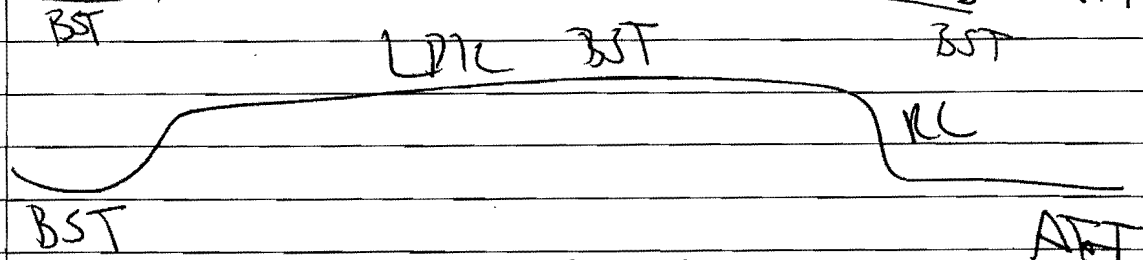

4 is recip of 1

260

~~Transit Traffic~~

~~ATT FB~~

In ATT 3, nvr defined local traffic.
Bill - OK with using interconnection traffic instead of local
Beth - May want to define local where it is necessary to use such as in compensation

Michael K - Definition of local + IT.
Beth w/ work on

~~11/27 available all day~~
~~11/24 - 9-12 P~~
~~12/4, 5 or 7 - any time~~

261

11/29/01 LATAwide Discussion w/ BST
BST: Michael, Jim M., Beth S.
AT&T: Sam, Ray, Bill + Jeff

- Beth sent FB revised language.
- Bill advsd different nds for Con + Bus.

Routing = CIC $\frac{\text{IntraLATA}}{\text{Toll svc}}$ = LPIC
Rltnship w/ cust

- Jim + Beth - agrd we cld use BST CIC and AT&T LPIC so AT&T cld bill end-user. (CIC code in LPIC field of LSR)
(THIS MEETS CONSUMER NEED)

262

12/4/01 BST: Rhona, Ed, Beth, Michael, Jim
AT&T: Bill, Michael, Ray, Jeff, Sam

Rvw of Beth's redline - Resolution of EB tied to resolution of UNE-P (BST position) → Beth S.

Bill rvwd AT&T proposed changes.
? - Does AT&T view 10XXXX & 1-800 traffic as same in 5.3.2. ?? Michael K. has ?.

5.3.5 - open for AT&T for tweaking.

Michael W. w/ send vs SC info w/i the next few days.

Strategy on LATA wide local:

Ray - Fight or not?
Ray - Funding?
Ray - accept ~~fact~~ billed intraLATA sa?
Ray - adopt ~~[illegible]~~ Consumer position

Bill suggested that what BST is offering is not horrible. Nd to get Bus. to mv in that mindset → adopt consumer position.

263

12/13/02 BST - Michael W., Thma
AT&T - Michael K., Anthony

Michael W. didn't think language shld be part of contract. Michael K. feels this language shld replace placeholder currently in place.

Anthony - #4 - AT&T offered 45 days, BST counter is 90 days. MW →
which

September - Lunch - N-Learn lead
- Rick day, place

Target Dates
April - Denise
DSL Overview
Diversity - June + July
Roberta - Number Portability - September
LNS Reorg - May
Local sales

- Share Sally Muscarella LNL mtgs
W team

Target which months to do Employee Trend survey: ~~Aug or Sept??~~ Oct

Events Team - Pam Nelson
Coordinate with them

By next month's meeting, determine date. No Mon or Fri,
1 hr to 1 1/2 hrs.

ATTACHMENT 3

LOCAL INTERCONNECTION

TABLE OF CONTENTS

1. NETWORK INTERCONNECTION 2
2. METHODS OF INTERCONNECTION 6
3. INTERCONNECTION TRUNKING AND ROUTING 9
5. NETWORK MAINTENANCE 24

EXHIBIT A

EXHIBIT B

EXHIBIT C

EXHIBIT D

EXHIBIT E

EXHIBIT F

FLORIDA PUBLIC SERVICE COMMISSION
DOCKET
NO. 020919-TP EXHIBIT NO. 25
COMPANY/
WITNESS: BSI ERAS-1
DATE: 05/07/03

3. INTERCONNECTION TRUNKING AND ROUTING

3.1 The Parties will convert all existing interconnection arrangements and trunks to the interconnection arrangements described in this Attachment in accordance with the following:

3.1.1 Within forty-five (45) days of either Party's written request, the Parties will mutually develop an operations plan based on sound engineering and operations principles, which will specify the guidelines to convert from the existing interconnection arrangements to the interconnection arrangements described in this Attachment 3. Such guidelines will conform to standard industry practices adopted by and contained in documents published by Industry Forums, including but not limited to, the Alliance for Telecommunications Industry Solutions ("ATIS") and the Ordering and Billing Forum ("OBF").

3.1.2 Each Party shall bear its own costs to convert from the existing interconnection arrangements to the interconnection arrangements described in this Attachment.

3.1.3 Unless otherwise mutually agreed, the Parties will complete the conversion within one (1) year of the Requesting Party's written request.

3.1.4 If, following one (1) year after the Requesting Party's written request, there exists any interconnection trunks which have not been converted to the interconnection arrangements described in this Attachment 3, then either Party may invoke the dispute resolution proceeding, pursuant to Section 16 of the General Terms and Conditions of this Agreement, incorporated herein by this reference.

3.2 The Parties will use the following interconnection standards:

3.2.1 The Parties agree to establish Binary 8 Zero Sum Extended Superframe line protocol, where technically feasible.

3.2.2 In those cases where either Party's equipment will not support 64K Clear Channel Capability ("CCC"), the Parties agree to establish AMI line coding. Any AMI line coding will be Superframe formatted. DS3 facilities will be provisioned with C-bit parity.

3.2.3 Where additional equipment is required, such equipment shall be obtained, engineered, and installed to support 64K CCC trunks.

3.2.4 All interconnection facilities between the Parties will be sized according to mutual forecasts developed per the requirements of Section 4.14 of this Attachment 3 and sound engineering practices.

3.2.5 Interconnection will be provided utilizing either a DS1 or DS3 interface or, with the mutual agreement of the Parties, another technically feasible interface (e.g., STS-1).

3.3 **Trunking Arrangements**

3.3.1 **Local Tandem Interconnection**. This interconnection arrangement allows AT&T to establish interconnection trunk group(s) at BellSouth local tandems for: (1) the delivery of AT&T-originated local traffic transported and terminated by BellSouth to BellSouth end offices within the local calling area as defined in BellSouth's General Subscriber Services Tariff, Section A3 served by those BellSouth local tandems; and (2) for local transit traffic transported by BellSouth for third party network providers who have also established an interconnection trunk group(s) at those BellSouth local tandems.

3.3.1.1 When a specified local calling area is served by more than one BellSouth local tandem, AT&T must designate a "home" local tandem for each of its assigned NPA/NXXs and establish trunk connections to such local tandems. Additionally, AT&T may choose to establish an interconnection trunk group(s) at the BellSouth local tandems where it has no codes homing but is not required to do so. AT&T may deliver local traffic to a "home" BellSouth local tandem that is destined for other BellSouth or third party network provider end offices subtending other BellSouth local tandems in the same local calling area where AT&T does not choose to establish an interconnection trunk group(s). It is AT&T's responsibility to enter its own NPA/NXX local tandem homing arrangements into the LERG either directly or via a vendor in order for other third party network providers to determine appropriate traffic routing to AT&T's codes. Likewise, AT&T shall obtain its routing information from the LERG.

3.3.1.2 Not withstanding establishing interconnection trunk group(s) to BellSouth's local tandems, AT&T must also establish an interconnection trunk group(s) to BellSouth access tandems within the LATA on which AT&T has NPA/NXX's homed for the delivery of Interexchange Carrier Switched Access ("SWA") and toll traffic, and traffic to Type 2A CMRS connections located at the access tandems. BellSouth cannot switch SWA traffic through more than one BellSouth access tandem. SWA, Type 2A CMRS or toll traffic routed to the local tandem in error will not be backhauled to the BellSouth access tandem for completion. (Type 2A CMRS interconnection is defined in BellSouth's General Subscriber Services Tariff, Section A35.)

3.15 The Parties agree to jointly manage the capacity of interconnection trunk groups to encourage the economic deployment of increasingly robust and diverse interconnection between their networks.

3.16 BellSouth Access Tandem Interconnection Architectures

3.16.1 BellSouth Access Tandem Interconnection provides intratandem access to subtending end offices. AT&T may choose which type of trunking architecture to use from the trunking architectures described in this Attachment 3. However, if both Parties' originated local and/or intraLATA toll traffic is utilizing the same two-way trunk group, the Parties shall mutually agree to use this type of two-way interconnection trunk group with the quantity of trunks being mutually determined and the provisioning being jointly coordinated. Furthermore, the IP(s) for two-way interconnection trunk groups transporting both Parties local and/or intraLATA toll shall be mutually agreed upon. AT&T shall order such two-way trunks via the Access Service Request ("ASR") process in place for Local Interconnection upon determination by the Parties, in a joint planning meeting, that such trunk groups shall be utilized. BellSouth will use the Trunk Group Service Request ("TGSR") to request changes in trunking. Both Parties reserve the right to issue ASRs, if so required, in the normal course of business. Furthermore, the Parties shall jointly review such trunk performance and forecasts on a periodic basis. The Parties use of two-way interconnection trunk groups for the transport of local and/or intraLATA toll traffic between the Parties does not preclude either Party from establishing additional one-way interconnection trunks for the delivery of its originated local and/or intraLATA toll traffic to the other Party. Any AT&T interconnection request that deviates from the interconnection trunk group architectures as described in this Agreement that affects traffic delivered to AT&T from a BellSouth switch that requires special BellSouth switch translations and other network modifications will require AT&T to submit a Bona Fide Request/New Business Request ("BFR/NBR") via the BFR/NBR Process set forth in this Agreement.

3.17 Standard Trunking Interconnection

3.17.1 In this interconnection architecture AT&T's originating Local and IntraLATA Toll and originating and terminating Transit Traffic is transported on a single two-way trunk group between AT&T and BellSouth access tandem(s) within a LATA. This group carries intratandem Transit Traffic between AT&T and Independent Companies, Interexchange Carriers, other CLECs and other network providers with which AT&T desires interconnection and has the proper contractual arrangements. This group also carries AT&T originated intertandem traffic transiting a single BellSouth access tandem destined to third party tandems such as an Independent Company

tandem or other CLEC tandem. BellSouth originated Local and IntraLATA Toll traffic is transported on a single one-way trunk group terminating to AT&T. The Two-way Trunking Rules, described in this Agreement, do not apply to this architecture. Other trunk groups for operator services, directory assistance, emergency services and intercept may be established if requested by AT&T. The LERG should be referenced for current routing and tandem serving arrangements. The Preferred Trunking Interconnection architecture is illustrated in Exhibit C.

3.18 One Way Trunking Interconnection

3.18.1 In this arrangement, the Parties interconnect using two one-way trunk groups. One one-way trunk group carries AT&T-originated local and intraLATA toll traffic destined for BellSouth end-users. The other one-way trunk group carries BellSouth-originated local and intraLATA toll traffic destined for AT&T end-users. A third two-way trunk group is established for AT&T's originating and terminating Transit Traffic. This group carries intratandem Transit Traffic between AT&T and Independent Companies, Interexchange Carriers, other CLECs and other network providers with which AT&T desires interconnection and has the proper contractual arrangements. This group also carries AT&T originated intertandem traffic transiting a single BellSouth access tandem destined to third party tandems such as an Independent Company tandem or other CLEC tandem. Other trunk groups for operator services, directory assistance, emergency services and intercept may be established if requested by AT&T. The LERG should be referenced for current routing and tandem serving arrangements. One Way Trunking Interconnection is illustrated in Exhibit D.

3.19 Two-Way Trunking Interconnection

3.19.1 Two-Way Trunking Interconnection establishes one two-way trunk group to carry local and IntraLATA toll traffic between AT&T and BellSouth. To establish this type of configuration, AT&T and BellSouth must agree to the Two-way Trunking Rules. In addition, a two-way transit trunk group must be established for AT&T's originating and terminating Transit Traffic. This group carries Intratandem Transit Traffic between AT&T and Independent Companies, Interexchange Carriers, other CLECs and other network providers with which AT&T desires interconnection and has the proper contractual arrangements. This group also carries AT&T originated intertandem traffic transiting a single BellSouth access tandem destined to third party tandems such as an Independent Company tandem or other CLEC tandem. Other trunk groups for operator services, directory assistance, emergency services and Intercept may be established if requested by AT&T. The

LERG should be referenced for current routing and tandem serving arrangements. Two-Way Trunk Interconnection is illustrated in Exhibit E.

3.20 Supergroup Interconnection

3.20.1 In the Supergroup Interconnection arrangement, the Parties Local and IntraLATA Toll and AT&T's Transit Traffic is exchanged on a single two-way trunk group between AT&T and BellSouth. AT&T and BellSouth must agree to the Two-way Trunking Rules in order to establish this architecture. This group carries intratandem Transit Traffic between AT&T and Independent Companies, Interexchange Carriers, other CLECs and other network providers with which AT&T desires interconnection and has the proper contractual arrangements. This group also carries AT&T originated intertandem traffic transiting a single BellSouth access tandem destined to third party tandems such as an Independent Company tandem or other CLEC tandem. Other trunk groups for operator services, directory assistance, emergency services and intercept may be established if requested. The LERG should be referenced for current routing and tandem serving arrangements. Supergroup Interconnection is illustrated in Exhibit F.

3.21 BellSouth End Office Interconnection

3.21.1 AT&T may establish interconnection at BellSouth end offices for the delivery of AT&T originated local and intralata toll traffic destined for BellSouth end-users served by that end-office.

3.21.2 When end office trunking is ordered by BellSouth to deliver BellSouth originated traffic to AT&T, BellSouth will provide overflow routing through BellSouth tandems consistent with how BellSouth overflows it's traffic. The overflow will be based on the homing arrangements AT&T displays in the LERG. Likewise, if AT&T interconnects to a BellSouth end office for delivery of AT&T originated traffic, AT&T will overflow the traffic through the BellSouth tandems based on the BellSouth homing arrangements shown in the LERG.

3.21.3 The Parties shall utilize direct end office-to-end office trunk groups under the following conditions:

3.21.3.1 Tandem Exhaust - If a tandem through which the Parties are interconnected is unable to, or is forecasted to be unable to support additional traffic loads for any period of time, the Parties will mutually agree on an end office trunking plan that will alleviate the tandem capacity shortage and ensure completion of traffic between AT&T and BellSouth's subscribers.

BELLSOUTH

BellSouth Telecommunications, Inc.
Suite 400
150 South Monroe Street
Tallahassee, FL 32301-1556

marshall.criser@bellsouth.com

Marshall M. Criser III
Vice President
Regulatory & External Affairs

850 224 7798
Fax 850 224 5073

March 14, 2003

030264 - TP

Mrs. Blanca S. Bayo
Director, Division of The Commission Clerk and Administrative Services
Florida Public Service Commission
2540 Shumard Oak Boulevard
Tallahassee, Florida 32399

Re: Notice of the Adoption of Interconnection, Unbundling, Resale, and Collocation agreement between BellSouth Telecommunications, Inc. ("BellSouth") and AT&T Communications of the Southern States, LLC d/b/a AT&T by Auglink Communications, Inc..

Dear Mrs. Bayó:

BellSouth Telecommunications, Inc. hereby provides notice to the Florida Public Service Commission of the adoption by Auglink Communications, Inc. of the Interconnection, Unbundling, Resale, and Collocation Agreement for the State of Florida entered into between BellSouth Telecommunications Inc. and AT&T Communications of the Southern States, LLC d/b/a AT&T, which was filed with this Commission on October 29, 2001 in Docket No. 000731-TP.

Auglink Communications, Inc. is adopting the agreement and all amendments (if applicable) as provided by Section 252(i) of the Telecommunications Act of 1996.

Enclosed is the original and two (2) copies of the contract between BellSouth Telecommunications, Inc. and Auglink Communications, Inc., for your records.

If you have any questions please do not hesitate to contact Kathleen Arant at (850) 222-9380.

Very truly yours,

Marshall M. Criser III
(KA)

Regulatory Vice President

FLORIDA PUBLIC SERVICE COMMISSION
DOCKET NO. 020919-TP EXHIBIT NO. 26
COMPANY/ WITNESS: AT&T- B/S Auglink Agreement
DATE: 05-07-03

DOCUMENT NUMBER-DATE
02521 MAR 14 8
FPSC-COMMISSION CLERK

26

BELLSOUTH® / CLEC Agreement

Customer Name: AugLink Communications, Inc.

Auglink	2
Adoption Papers	3
Att 8 - Rights of Way	12
Exhibit3	15
Att 1 - Resale Discounts and Rates	16
Att 2 - UNE Rates	17
Att 3 - Local Interconnection Rates	69
Att 7 - ODUF ADUF EODUF CMDS Rates	70

Note: This page is not part of the actual signed contract/amendment, but is present for record keeping purposes only.

By and Between

BellSouth Telecommunications, Inc.

And

AugLink Communications, Inc.

AGREEMENT

This Agreement, which shall become effective thirty (30) days following the date of the last signature of both Parties ("Effective Date"), is entered into by and between AugLink Communications, Inc., ("AugLink"), a Florida corporation on behalf of itself, and BellSouth Telecommunications, Inc., ("BellSouth"), a Georgia corporation, having an office at 675 W. Peachtree Street, Atlanta, Georgia, 30375, on behalf of itself and its successors and assigns.

WHEREAS, the Telecommunications Act of 1996 (the "Act") was signed into law on February 8, 1996; and

WHEREAS, section 252(i) of the Act requires BellSouth to make available any interconnection, service, or network element provided under an agreement approved by the appropriate state regulatory body to any other requesting telecommunications carrier upon the same terms and conditions as those provided in the agreement in its entirety; and

WHEREAS, AugLink has requested that BellSouth make available the interconnection agreement in its entirety executed between BellSouth and AT&T Communications of the Southern States, Inc. ("AT&T") dated October 26, 2001for the state of Florida.

NOW, THEREFORE, in consideration of the promises and mutual covenants of this Agreement, AugLink and BellSouth hereby agree as follows:

1. AugLink and BellSouth shall adopt in its entirety, except for those items identified in Paragraph 2-11 following, the AT&T Interconnection Agreement dated October 26, 2001 and any and all amendments to said agreement executed and approved by the appropriate state regulatory commission as of the date of the execution of this Agreement. The AT&T Interconnection Agreement and all amendments are attached hereto as Exhibit 1 and incorporated herein by this reference. The adoption of this agreement with amendment(s) consists of the following:

ITEM	NO. PAGES
Adoption Papers	9
Exhibit 1 - Title Page	1
Exhibit 1 - AT&T Agreement	469
Exhibit 1 - Amendment dated 04/18/02	56
Exhibit 1 - Amendment dated 09/06/02	5
Exhibit 1 - Amendment dated 10/15/02	70
Exhibit 1 – Amendment dated 11/26/02	3
Exhibit 2 - ATT 8 - Rights of Way	3
Exhibit 3 – Rates	54
TOTAL	670

2. The Parties agree to delete Section 3.23 of Attachment 1 and replace with a new Section 3.23 as follows:

3.23 Notwithstanding the foregoing, BellSouth may provide AugLink notice via Internet posting of price changes and changes to the terms and conditions of services available for resale per Commission Orders. BellSouth will also post changes to business processes and policies, notices of new service offerings, and changes to service offerings not requiring an amendment to this Agreement, notices required to be posted to BellSouth's website, and any other information of general applicability to CLECs.

3. The Parties hereby agree to delete Section 5.3.1.1 of Attachment 3, as amended on April 18, 2002, and replace with new Sections 5.3.1.1 and 5.3.1.1.1 as follows:

5.3.1.1 For reciprocal compensation between the Parties pursuant to this Attachment, Local Traffic is defined as any circuit switched call that is originated by an end user of one Party and terminated to an end user of the other Party within a given LATA on that other Party's network, except for those calls that are originated or terminated through switched access arrangements (i.e., traffic that is exchanged over switched access trunk groups). Additionally, Local Traffic includes any cross boundary, voice-to-voice intrastate, interLATA or interstate, interLATA calls established as a local call by the ruling regulatory body. ISP-bound Traffic is defined as calls to an information service provider or Internet service provider ("ISP") that are dialed by using a local dialing pattern (7 or 10 digits) by a calling party in one LATA to an ISP server or modem in the same LATA. ISP-bound Traffic is not Local Traffic subject to reciprocal compensation, but instead is information access traffic subject to the FCC's jurisdiction.

5.3.1.1.1 Notwithstanding the definitions of Local Traffic and ISP-bound traffic above, and pursuant to the FCC's Order on Remand and Report and Order in CC Docket 99-68 released April 27, 2001 ("ISP Order on Remand"), BellSouth and AugLink agree to the rebuttable presumption that all combined circuit switched Local and ISP-bound Traffic delivered to BellSouth or AugLink that exceeds a 3:1 ratio of terminating to originating traffic on a statewide basis shall be considered ISP-bound traffic for compensation purposes. BellSouth and AugLink further agree to the rebuttable presumption that all combined circuit switched Local and ISP-bound Traffic delivered to BellSouth or AugLink that does not exceed a 3:1 ratio of terminating to originating traffic on a statewide basis shall be considered Local Traffic for compensation purposes.

4. The Parties hereby agree to delete Sections 5.3.2, 5.3.3, 5.3.3.1, 5.3.3.2, 5.3.3.3, 5.3.4 and 5.3.5 of Attachment 3, as amended on April 18, 2002 and replaced with new Sections 5.3.2, 5.3.3, 5.3.3.1, 5.3.3.2, 5.3.3.3, 5.3.3.4, 5.3.4 as follows:

5.3.2 The Parties shall provide for the mutual and reciprocal recovery of the cost for the network facilities utilized in transporting and terminating Local Traffic on each other's network.

5.3.3 The Parties agree that charges for transport and termination of Local Traffic on their respective networks are as set-forth in Exhibit A to this Attachment.

5.3.4 Neither Party shall pay compensation to the other Party for per minute of use rate elements associated with Call Transport and Termination of ISP-bound Traffic.

5.3.5 The appropriate elemental rates set-forth in Exhibit A of this Attachment shall apply for Transit Traffic as described in Section 5.3.20 below.

5. The Parties hereby agree to delete Sections 5.3.10 and 5.3.11, as amended on April 18, 2002, of Attachment 3 and replaces with new Sections 5.3.10 and 5.3.11 as follows:

5.3.10 Switched Access Traffic. Switched Access Traffic is described as telephone calls requiring local transmission or switching services for the purpose of the origination or termination of Telephone Toll Services. Switched Access Traffic includes, but is not limited to, the following types of traffic: Feature Group A, Feature Group B, Feature Group C, Feature Group D, toll free access (e.g., 8XX), 900 access and their successors. Additionally, any Public Switched Telephone Network interexchange telecommunications traffic, regardless of transport protocol method, where the originating and terminating points, end-to-end points, are in different LATAs, or are in the same LATA and the Parties' Switched Access services are used for the origination or termination of the call, shall be considered Switched Access Traffic. Irrespective of transport protocol method used, a call which originates in one LATA and terminates in another LATA (i.e., the end-to-end points of the call) or in which the Parties' Switched Access Services are used for the origination or termination of the call, shall not be considered Local Traffic or ISP-bound Traffic. If the BellSouth end user chooses AugLink as their presubscribed interexchange carrier, or if the BellSouth end user uses AugLink as an interexchange carrier on a 101XXXX basis, BellSouth will charge AugLink the appropriate BellSouth tariff charges for originating switched access services. Neither Party shall represent Switched Access Traffic as Local Traffic or ISP-bound Traffic for the purposes of determining compensation for the call.

5.3.11 If AugLink assigns NPA/NXXs to specific BellSouth rate centers within the LATA and assigns numbers from those NPA/NXXs to AugLink end users physically located outside of that LATA, BellSouth traffic originating from within the LATA where the NPA/NXXs are assigned and delivered to an AugLink customer physically located outside of such LATA, shall not be deemed Local Traffic. Further, AugLink agrees to identify such interLATA traffic to BellSouth and to compensate BellSouth for originating and transporting such interLATA traffic to AugLink at BellSouth's switched access tariff rates.

5.3.11.1 If AugLink does not identify such interLATA traffic to BellSouth, to the best of BellSouth's ability BellSouth will determine which whole AugLink NPA/NXXs on which to charge the applicable rates for originating network access service as reflected in BellSouth's Access Service Tariff. BellSouth shall make appropriate billing adjustments if AugLink can provide sufficient information for BellSouth to determine whether or not said traffic is Local Traffic.

6. The Parties hereby agree to delete Sections 4.2, 6.4.3 and 7.1 in Attachment 4 as amended on 4/18/2002 and replace them with new Sections below:

4.2 Occupancy. BellSouth will notify AugLink in writing that the Collocation Space is ready for occupancy ("Space Ready Date"). AugLink will schedule and complete an acceptance walkthrough of each Collocation Space with BellSouth within fifteen (15) calendar days of BellSouth's notifying AugLink that the Collocation Space is ready for occupancy. BellSouth will correct any deviations to AugLink's original or jointly amended requirements within seven (7) calendar days after the walkthrough, unless the Parties jointly agree upon a different time frame, and BellSouth shall establish a new Space Ready Date. Another acceptance walkthrough will then be scheduled and conducted within fifteen (15) calendar days of the new Space Ready Date. This follow-up acceptance walkthrough will be limited to those items identified in the initial walkthrough. If AugLink has met the fifteen (15) calendar day interval(s), billing will begin upon the date of AugLink's acceptance of the Collocation Space ("Space Acceptance Date"). In the event that AugLink fails to complete an acceptance walkthrough within this fifteen (15) calendar day interval, the Collocation Space shall be deemed accepted by AugLink on the Space Ready Date and billing will commence from that date. If AugLink decides to occupy the space prior to the Space Ready Date, the date AugLink occupies the space becomes the new Space Acceptance Date and billing begins from that date. AugLink must notify BellSouth in writing that collocation equipment installation is complete and is operational with BellSouth's network. BellSouth may, at its option, not accept orders for cross connects until receipt of such notice. For purposes of this paragraph, AugLink's telecommunications equipment will be deemed operational when cross-connected to BellSouth's network for the purpose of service provisioning.

6.4.3 Acceptance Walkthrough. AugLink will schedule and complete an acceptance walkthrough of each Collocation Space with BellSouth within fifteen (15) calendar days of BellSouth's notifying AugLink that the Collocation Space is ready for occupancy. In the event that AugLink fails to complete an acceptance walkthrough within this fifteen (15) day interval, the Collocation Space shall be deemed accepted by AugLink on the Space Ready Date. BellSouth will correct any deviations to AugLink's original or jointly amended requirements within seven (7) calendar days after the walkthrough, unless the Parties jointly agree upon a different time frame.

7.1 Recurring Charges. If AugLink has met the applicable fifteen (15) calendar day walkthrough interval(s) specified in Section 4, billing for recurring charges will begin upon the Space Acceptance Date. In the event that AugLink fails to complete an

Exhibit 2

Attachment 8

Rights-of-Way, Conduits and Pole Attachments

acceptance walkthrough within the applicable fifteen (15) calendar day interval(s), billing for recurring charges will commence on the Space Ready Date. If AugLink occupies the space prior to the Space Ready Date, the date AugLink occupies the space becomes the new Space Acceptance Date and billing for recurring charges begin on that date.

7. The Parties hereby agree to delete Section 21, and 21.1 of General Terms and Conditions and add new Sections 17 and 17.1 in Attachment 4 as follows:

17. Insurance Requirements

17.1 At all times during the term of this Agreement, each Party shall maintain, at its own expense, (i) all insurance required by applicable Law including insurance and approved self insurance for statutory workers compensation coverage and (ii) commercial general liability coverage in the amount of not less than ten million dollars ($10,000,000) or a combination of commercial general liability and excess/umbrella coverage totaling ten million dollars ($10,000,000). Upon request from the other Party, each Party shall furnish the other Party with certificates of insurance which evidence the minimum levels of insurance set forth herein. Each Party may satisfy all or part of the coverage specified herein through self-insurance. Each Party shall give the other Party at least thirty (30) days advance written notice of any cancellation or non-renewal of insurance required by this Section.

8. Attachment 6, Section 1.1.7 hereby deleted in its entirety and replaced with a new Section 1.1.7 as follows:

1.1.7 Deposit Policy. When purchasing services from BellSouth, AugLink will be required to complete the BellSouth Credit Profile and provide information regarding credit worthiness. Based on the results of the credit analysis, BellSouth reserves the right to secure the account with a suitable form of security deposit. Such security deposit shall take the form of cash, an Irrevocable Letter of Credit (BellSouth form), Surety Bond (BellSouth form) or, in its sole discretion, some other form of security. Such security deposit shall be required prior to inauguration of service. Security deposits collected under this Section shall not exceed two months' estimated billing. The fact that a security deposit has been made in no way relieves AugLink from complying with BellSouth's regulations as to advanced payments. Any such security deposit shall in no way release AugLink from its obligation to make compete and timely payments of its bills. If in the sole opinion of BellSouth, circumstances so warrant and/or gross monthly billing has increased beyond the level initially used to determine the level of security, BellSouth reserves the right to request additional security and/or file a Uniform Commercial Code (UCC-1) security interest in AugLink's "accounts receivables and proceeds". In the event AugLink fails to remit to BellSouth any deposit requested pursuant to this Section, service to AugLink may be terminated in accordance with the terms of Section 1.8 of this Attachment, and any security deposit will be applied to AugLink's account(s). In the event service to AugLink is terminated due to AugLink's default on its account, any security deposits

held will be applied to AugLink's account. Interest on a security deposit, if provided in cash, shall accrue and be paid in accordance with the terms in the appropriate BellSouth tariff.

9. Attachment 8 will be deleted in its entirety and replaced with a new Attachment 8 attached hereto as Exhibit 2.

10. The Parties hereby agree to delete in entirety Attachment 13.

11. The Parties hereby agree to delete in entirety and replace the Florida rates contained in Exhibit D of Attachment 1, Exhibit A of Attachment 2, Exhibit A of Attachment 3, and Exhibit A of Attachment 7 with the rates in Exhibit 3 of this Agreement, as ordered in Florida Docket 990649-TP, issued October 18, 2001 and the September 27, 2002 120 Day UNE Order.

12. In the event that AugLink consists of two (2) or more separate entities as set forth in the preamble to this Agreement, all such entities shall be jointly and severally liable for the obligations of AugLink under this Agreement.

13. The term of this Agreement shall be from the effective date as set forth above and shall expire as set forth in Section 2.1 of the AT&T Interconnection Agreement. For the purposes of determining the expiration date of this Agreement pursuant to Section 2.1 of the AT&T Interconnection Agreement, the effective date shall be October 26, 2001.

14. AugLink shall accept and incorporate any amendments to the AT&T Interconnection Agreement executed as a result of any final judicial, regulatory, or legislative action.

15. Every notice, consent, approval, or other communications required or contemplated by this Agreement shall be in writing and shall be delivered in person or given by postage prepaid mail, address to:

BellSouth Telecommunications, Inc.

BellSouth Local Contract Manager
600 North 19th Street, 8th floor
Birmingham, Alabama 35203

and

ICS Attorney
Suite 4300
675 W. Peachtree St.
Atlanta, GA 30375

AugLink Communications, Inc.
Jay Jennision
5 Cordova St
Saint Augustine FL 32084
904-494-2322
jennison@aug.com

or at such other address as the intended recipient previously shall have designated by written notice to the other Party. Where specifically required, notices shall be by certified or registered mail. Unless otherwise provided in this Agreement, notice by mail shall be effective on the date it is officially recorded as delivered by return receipt or equivalent, and in the absence of such record of delivery, it shall be presumed to have been delivered the fifth day, or next business day after the fifth day, after it was deposited in the mails.

IN WITNESS WHEREOF, the Parties have executed this Agreement through their authorized representatives

BellSouth Telecommunications, Inc.	AugLink Communications, Inc.
Signature	Signature
Elizabeth R. A. Shiroishi	JOHN C. JENNISON III
Name	Name
Director, Interconnection Services	President
Title	Title
24 Feb 2003	2-14-03
Date	Date

EXHIBIT 1

FLORIDA PUBLIC SERVICE COMMISSION

DOCKET NO. 020919-TP

AT&T v. BELLSOUTH

RECIPROCAL COMPENSATION HEARING

MAY 7, 2003

Exh. 27

FLORIDA PUBLIC SERVICE COMMISSION
DOCKET
NO. 020919-TP EXHIBIT NO. 27
COMPANY/
WITNESS: AT&T - Local Traffic Matrix
DATE: 05-07-03

LOCAL TRAFFIC MATRIX

Shiroishi to Peacock - July 11, 2001, 6:12 p.m.

5.3 Interconnection Compensation

5.3.1 Compensation for Local Traffic

5.3.1.1 For reciprocal compensation between the Parties pursuant to this Attachment, Local Traffic is defined as any telephone call that originates and terminates in the same LATA except for those calls that are originated or terminated through switched access arrangements as established by the ruling regulatory body when the original Party has its own switch. **[OPEN-AT&T]** Therefore when an AT&T end user originates traffic and AT&T sends it to BellSouth for termination, AT&T will determine whether the traffic is local or intraLATA toll. When a BellSouth end user originates traffic and BellSouth send it to AT&T for termination, BellSouth will determine whether the traffic is local or intraLATA toll. Each Party will provide the other with information that will allow it to distinguish local from intraLATA toll traffic. At a minimum, each Party shall utilize NXX's in such a way that the other Party shall be able to distinguish local from intraLATA toll traffic.

DISAGREE

AT&T PROPOSAL: As clarification of this definition and for reciprocal compensation, Local Traffic does include traffic that originates and terminates to or through enhanced service provider or information service provider.

BST PROPOSAL: As clarification of this definition and for reciprocal compensation, Local Traffic does not include traffic that originates from or is directed to or through an enhanced service provider or information service provider.

LOCAL TRAFFIC MATRIX (Cont'd.)

Shiroishi to Peacock – July 17, 2001, 12:54 p.m.

5.3.1 **Compensation for Local Traffic**

***** Shiroishi adds language that Parties have agreed to compensation for calls to ISPs by agreeing to implement FCC's ISP Order *****

5.3.1.1 **For the treatment of local and ISP-bound traffic in this Agreement, the Parties agree to implement the FCC's Order on Remand and Report and Order in CC Docket 96-98 and 99-68 released April 27, 2001 ("ISP Order on Remand"). The Parties further agree to amend this agreement, within sixty (60) days of execution, to incorporate language reflecting the FCC ISP Order on Remand. At such time as that amendment is finalized, the Parties agree to work cooperatively to "true-up" compensation amounts consistent with the terms of the amended language from the effective date of the FCC ISP Order on Remand to the date the amendment is finalized.**

Additionally, the Parties agree to apply a "LATAwide"local concept to this Attachment 3, meaning that traffic that has traditionally been treated as intraLATA toll traffic will now be treated as local for intercarrier compensation purposes, except for those calls that are originated or terminated through switched access arrangements as established by the ruling regulatory body.

***** Shiroishi strikes through below red language. *****

For reciprocal compensation between the Parties pursuant to this Attachment, Local Traffic is defined as any telephone call that originates and terminates in the same LATA except for those calls that are originated or terminated through switched access arrangements as established by the ruling regulatory body when the original Party has its own switch. [OPEN-AT&T] Therefore when an AT&T end user originates traffic and AT&T sends it to BellSouth for termination, AT&T will determine whether the traffic is local or intraLATA toll. When a BellSouth end user originates traffic and BellSouth send it to AT&T for termination, BellSouth will determine whether the traffic is local or intraLATA toll. Each Party will provide the other with information that will allow it to distinguish local from intraLATA toll traffic. At a minimum, each Party shall utilize NXX's in such a way that the other Party shall be able to distinguish local from intraLATA toll traffic.

LOCAL TRAFFIC MATRIX (Cont'd.)

Shiroishi to Peacock - July 18, 2001, 7:27 a.m.

5.3.1 Compensation for Local Traffic

***** Shiroishi changes "ruling regulatory body" to "State Commission or FCC" *** See red language below.**

For the treatment of local and ISP-bound traffic in this Agreement, the Parties agree to implement the FCC's Order on Remand and Report and Order in CC Docket 96-98 and 99-68 released April 27, 2001 ("ISP Order on Remand"). The Parties further agree to amend this agreement, within sixty (60) days of execution, to incorporate language reflecting the FCC ISP Order on Remand. At such time as that amendment is finalized, the Parties agree to work cooperatively to "true-up" compensation amounts consistent with the terms of the amended language from the effective date of the FCC ISP Order on Remand to the date the amendment is finalized. Additionally, the Parties agree to apply a "LATAwide" local concept to this Attachment 3, meaning that traffic that has traditionally been treated as intraLATA toll traffic will now be treated as local for intercarrier compensation purposes, except for those calls that are originated or terminated through switched access arrangements as established by the **State Commission or FCC**.

LOCAL TRAFFIC MATRIX (Cont'd.)

Peacock to Shiroishi - July 19, 2001, 2:21 a.m.

5.3 Interconnection Compensation

5.3.1 **Compensation for Local Traffic**

5.3.1.1 For the treatment of local and ISP-bound traffic in this Agreement, the Parties agree to implement the FCC's Order on Remand and Report and Order in CC Docket No. 96-98 and 99-68 released April 27, 2001 ("ISP Order on Remand"). The Parties further agree to amend this agreement, within sixty (60) days of execution, to incorporate language reflecting the FCC ISP Order on Remand. At such time as that amendment finalized, the Parties agree to work cooperatively to "true-up" compensation amounts consistent with the terms of the amended language from the effective date of the FCC ISP Order on Remand to the date the amendment is finalized.

***** Following Underlined Sentences added by Peacock *****

In no event shall this Agreement have any effect on the rates applicable to interconnection traffic and ISP traffic prior to the effective date of the FCC ISP Order or any claims by AT&T against BellSouth for non-payment of such charges. The rates applicable to ISP traffic under this Agreement pursuant to the FCC ISP Order shall in no event be deemed to apply retroactively prior to the effective date of the FCC ISP Order.

Additionally, the Parties agree to apply a "LATAwide" local concept to this Attachment 3, meaning that traffic that has traditionally been treated as intraLATA toll traffic will now be treated as local for intercarrier compensation purposes, except for those calls that are originated or terminated through switched access arrangements as established by the State Commission or FCC.

LOCAL TRAFFIC MATRIX (Cont'd.)

Peacock to Shiroishi - July 19, 2001, 9:59 a.m.

5.3 Interconnection Compensation

5.3.1 **Compensation for Local Traffic**

5.3.1.1 For the treatment of local and ISP-bound traffic in this Agreement, the Parties agree to implement the FCC's Order on Remand and Report and Order in CC Docket No. 96-98 and 99-68 released April 27, 2001 ("ISP Order on Remand"). The Parties further agree to amend this agreement, within sixty (60) days of execution, to incorporate language reflecting the FCC ISP Order on Remand. At such time as that amendment finalized, the Parties agree to work cooperatively to "true-up" compensation amounts consistent with the terms of the amended language from the effective date of the FCC ISP Order on Remand to the date the amendment is finalized.

***** Shiroishi Deletes Two Sentences Added by Peacock on July 19, 2001, 2:21 a.m.*****

In no event shall this Agreement have any effect on the rates applicable to interconnection traffic and ISP traffic prior to the effective date of the FCC ISP Order or any claims by AT&T against BellSouth for non-payment of such charges. The rates applicable to ISP traffic under this Agreement pursuant to the FCC ISP Order shall in no event be deemed to apply retroactively prior to the effective date of the FCC ISP Order.

Additionally, the Parties agree to apply a "LATAwide" local concept to this Attachment 3, meaning that traffic that has traditionally been treated as intraLATA toll traffic will now be treated as local for intercarrier compensation purposes, except for those calls that are originated or terminated through switched access arrangements as established by the State Commission or FCC.

SWITCHED ACCESS TRAFFIC MATRIX

Shiroishi to Peacock - July 11, 2001, 6:21 p.m.

5.3.3 **Switched Access Traffic**. Switched Access Traffic is defined as telephone calls requiring local transmission or switching services for the purpose of the origination or termination of ***Telephone Toll Service***.

Switched Access Traffic includes, but is not limited to, the following types of traffic: Feature Group A, Feature Group B, Feature Group C, Feature Group D, toll free access (e.g., 800/877/888), 900 access, and their successors.

The Parties have been unable to agree as to whether Voice over Internet Protocol (VOIP) transmissions which cross local calling area boundaries constitute Switched Access Traffic.

Notwithstanding the foregoing, and without waiving any rights with respect to either Party's position as to the jurisdictional nature of VOIP, the Parties agree to abide by any effective and applicable FCC rules and orders regarding the nature of such traffic and the compensation payable by the Parties for such traffic, if any; provided however, that any VOIP transmission which originates in one local calling area and terminates in another local calling area (i.e., the end-to-end points of the call), shall not be compensated as Local Traffic.

SWITCHED ACCESS TRAFFIC MATRIX (Cont'd.)

Peacock to Shiroishi - July 16, 2001, 4:20 p.m.

5.3.3 **Switched Access Traffic**. Switched Access Traffic is defined as telephone calls requiring local transmission or switching services for the purpose of the origination or termination of

***** Peacock "Strike-Out" of Telephone Toll Service*** Telephone Toll Service**.

Switched Access Traffic includes, but is not limited to, the following types of traffic: Feature Group A, Feature Group B, Feature Group C, Feature Group D, toll free access (e.g., 800/877/888), 900 access, and their successors. The Parties have been unable to agree as to whether Voice over Internet Protocol (VOIP) transmissions which cross local calling area boundaries constitute Switched Access Traffic. Notwithstanding the foregoing,and without waiving any rights with respect to either Party's position as to the jurisdictional nature of VOIP, the Parties agree to abide by any effective and applicable FCC rules and orders regarding the nature of such traffic and the compensation payable by the Parties for such traffic, if any; provided however, that any VOIP transmission which originates in one local calling area and terminates in another local calling area (i.e., the end-to-end points of the call), shall not be compensated as Local Traffic.

SWITCHED ACCESS TRAFFIC MATRIX (Cont'd.)

Shiroishi to Peacock - July 17, 2001, 12:54 p.m.

5.3.3 **Switched Access Traffic**. Switched Access Traffic is defined as telephone calls requiring local transmission or switching services for the purpose of the origination or termination of Telephone Toll Service.

Switched Access Traffic includes, but is not limited to, the following types of traffic: Feature Group A, Feature Group B, Feature Group C, Feature Group D, toll free access (e.g., 800/877/888), 900 access, and their successors. The Parties have been unable to agree as to whether Voice over Internet Protocol (VOIP) transmissions which cross local calling area boundaries constitute Switched Access Traffic. Notwithstanding the foregoing, and without waiving any rights with respect to either Party's position as to the jurisdictional nature of VOIP, the Parties agree to abide by any effective and applicable FCC rules and orders regarding the nature of such traffic and the compensation payable by the Parties for such traffic, if any; provided however, that any VOIP transmission which originates in one LATA and terminates in another LATA (i.e., the end-to-end points of the call), shall not be compensated as Local Traffic.

***** Shiroishi Adds Last Sentence. *****

This Section 5.3.2 is interrelated to Section 5.3.1.2.

SWITCHED ACCESS TRAFFIC MATRIX (Cont'd.)

Shiroishi to Peacock - July 18, 2001, 7:27 p.m.

5.3.3 **Switched Access Traffic**. Switched Access Traffic is defined as telephone calls requiring local transmission or switching services for the purpose of the origination or termination of

***** Shiroishi adds "IntraLATA Intrastate, Intrastate InterLATA and Interstate InterLATA" *****

IntraLATA Intrastate, Intrastate InterLATA and Interstate InterLATA traffic.

***** Note: Telephone Toll Service deleted from July 16, 2001, 4:20 p.m. "red-line."**

Switched Access Traffic includes, but is not limited to, the following types of traffic: Feature Group A, Feature Group B, Feature Group D, toll free access (e.g., 800/877/888), 900 access, and their successors. The Parties have been unable to agree as to whether Voice over Internet Protocol (VOIP) transmissions which cross local calling area boundaries constitute Switched Access Traffic. Notwithstanding the foregoing, and without waiving any rights with respect to either Party's position as to the jurisdictional nature of VOIP, the Parties agree to abide by any effective and applicable FCC rules and orders regarding the nature of such traffic and the compensation payable by the Parties for such traffic, if any; provided however, that any VOIP transmission which originates in one LATA and terminates in another LATA (i.e., the end-to-end points of the call), shall not be compensated as Local Traffic.

This Section is interrelated to Section 5.3.1.1.

SWITCHED ACCESS TRAFFIC MATRIX (Cont'd.)

Peacock to Shiroishi - July 19, 2001, 2:21 a.m.

5.3.3 **Switched Access Traffic**. Switched Access Traffic is defined as telephone calls requiring local transmission or switching services for the purpose of the origination or termination of

***** Peacock Highlights IntraLATA Intrastate For Discussion *** IntraLATA Intrastate, *** Peacock moves following language up in the Section. *****

(If BellSouth or AT&T is the other Party's end user's presubscribed interexchange carrier or if an end user uses BellSouth or AT&T as an interexchange carrier on a 101XXX basis, BellSouth or AT&T will charge the other Party the appropriate tariff charges for originating switched access services.) calls that are routed over switched access trunk groups, Intrastate InterLATA and Interstate InterLATA traffic. Switched Access Traffic includes, but is not limited to, the following types of traffic: Feature Group A, Feature Group B, Feature Group D, toll free access (e.g., 800/877/888), 900 access, and their successors. (If BellSouth or AT&T is the other Party's end user's presubscribed interexchange carrier or if an end user uses BellSouth or AT&T as an interexchange carrier on a 101XXX basis, BellSouth or AT&T will charge the other Party the appropriate tariff charges for originating switched access services.) However, the Parties have been unable to agree as to whether Voice over Internet Protocol (VOIP) transmissions which cross local calling area boundaries constitute Switched Access Traffic. Notwithstanding the foregoing, and without waiving any rights with respect to either Party's position as to the jurisdictional nature of VOIP, the Parties agree to abide by any effective and applicable FCC rules and orders regarding the nature of such traffic and the compensation payable by the Parties for such traffic, if any; provided however, that any VOIP transmission which originates in one LATA and terminates in another LATA (i.e., the end-to-end points of the call), shall not be compensated as Local Traffic.

This Section 5.3.2 is interrelated to Section 5.3.1.1.

SWITCHED ACCESS TRAFFIC MATRIX (Cont'd.)

Shiroishi to Peacock - July 19, 2001, 9:59 a.m.

5.3.3 **Switched Access Traffic**. Switched Access Traffic is defined as telephone calls requiring local transmission or switching services for the purpose of the origination or termination of

***** Shiroishi "Strikes Out" red language IntraLATA Intrastate *****

IntraLATA Intrastate, Intrastate InterLATA and Interstate InterLATA traffic. Switched Access Traffic includes, but is not limited to, the following types of traffic: Feature Group A, Feature Group B, Feature Group D, toll free access (e.g., 800/877/888), 900 access, and their successors.

Additionally, if BellSouth or AT&T is the other Party's end user's presubscribed interexchange carrier or if an end user uses BellSouth or AT&T as an interexchange carrier on a 101XXX basis, BellSouth or AT&T will charge the other Party the appropriate tariff charges for originating switched access services.

The Parties have been unable to agree as to whether Voice over Internet Protocol (VOIP) transmissions which cross local calling area boundaries constitute Switched Access Traffic. Notwithstanding the foregoing, and without waiving any rights with respect to either Party's position as to the jurisdictional nature of VOIP, the Parties agree to abide by any effective and applicable FCC rules and orders regarding the nature of such traffic and the compensation payable by the Parties for such traffic, if any; provided however, that any VOIP transmission which originates in one LATA and terminates in another LATA (i.e., the end-to-end points of the call), shall not be compensated as Local Traffic.

This Section is interrelated to Section 5.3.1.1.

INTRALATA TOLL TRAFFIC MATRIX

Shiroishi to Peacock - July 11, 2001 - 6:21 a.m.

5.4 Compensation for IntraLATA Toll Traffic

5.4.1 IntraLATA Toll Traffic. IntraLATA Toll Traffic is defined as any telephone call that originates and terminates in the same LATA and is billed by the originating Party as a toll call.

5.4.2 Compensation for IntraLATA Toll Traffic. For terminating its IntraLATA Toll Traffic on the other Party's network, the originating Party will pay the terminating Party's intrastate or interstate terminating switched access tariff rates as set forth in the effective intrastate or interstate access services tariff, whichever is appropriate. The appropriate charges will be determined by the routing of the call. If BellSouth or AT&T is the other Party's end user's presubscribed interexchange carrier or if an end user uses BellSouth or AT&T as an interexchange carrier on a 101XXXX basis, BellSouth or AT&T will charge the other Party the appropriate tariff charges for originating switched access services.

INTRALATA TOLL TRAFFIC MATRIX (Cont'd.)

Shiroishi to Peacock - July 18, 2001, 7:27 a.m.

***** Shiroishi "Strikes-Out" Following Red Language *****

5.4 **Compensation for IntraLATA Toll Traffic**

5.4.1 **IntraLATA Toll Traffic. IntraLATA Toll Traffic is defined as any telephone call that originates and terminates in the same LATA and is billed by the originating Party as a toll call.**

5.4.2 **Compensation for IntraLATA Toll Traffic**

5.3.9 **For terminating its IntraLATA Toll Traffic on the other Party's network, the originating Party will pay the terminating Party's intrastate or interstate terminating switched access tariff rates as set forth in the effective intrastate or interstate access services tariff, whichever is appropriate. The appropriate charges will be determined by the routing of the call.**

If BellSouth or AT&T is the other Party's end user's presubscribed interexchange carrier or if an end user uses BellSouth or AT&T as an interexchange carrier on a 101XXXX basis, BellSouth or AT&T will charge the other Party the appropriate tariff charges for originating switched access services.

INTRALATA TOLL TRAFFIC MATRIX (Cont'd.)

Peacock to Shiroishi - July 19, 2001- 2:21 a.m.

5.4 Compensation for IntraLATA Toll Traffic

5.4.1 IntraLATA Toll Traffic. IntraLATA Toll Traffic is defined as any telephone call that originates and terminates in the same LATA and is billed by the originating Party as a toll call.

5.4.2 Compensation for IntraLATA Toll Traffic. For terminating its IntraLATA Toll Traffic on the other Party's network, the originating Party will pay the terminating Party's intrastate or interstate terminating switched access tariff rates as set forth in the effective intrastate or interstate access services tariff, whichever is appropriate. The appropriate charges will be determined by the routing of the call.

***** Peacock "Strike-Out" Remaining Blue Language *****

If BellSouth or AT&T is the other Party's end user's presubscribed interexchange carrier or if an end user uses BellSouth or AT&T as an interexchange carrier on a 101XXXX basis, BellSouth or AT&T will charge the other Party the appropriate tariff charges for originating switched access services.

INTRALATA TOLL TRAFFIC MATRIX (Cont'd.)

Shiroishi to Peacock - July 19, 2001, 9:59 a.m. – All Language Deleted

5.4 **Compensation for IntraLATA Toll Traffic**

5.4.1 **IntraLATA Toll Traffic. IntraLATA Toll Traffic is defined as any telephone call that originates and terminates in the same LATA and is billed by the originating Party as a toll call.**

5.4.2 **Compensation for IntraLATA Toll Traffic. For terminating its IntraLATA Toll Traffic on the other Party's network, the originating Party will pay the terminating Party's intrastate or interstate terminating switched access tariff rates as set forth in the effective intrastate or interstate access services tariff, whichever is appropriate. The appropriate charges will be determined by the routing of the call. If BellSouth or AT&T is the other Party's end user's presubscribed interexchange carrier or if an end user uses BellSouth or AT&T as an interexchange carrier on a 101XXXX basis, BellSouth or AT&T will charge the other Party the appropriate tariff charges for originating switched access services.**

INTRALATA TOLL TRAFFIC MATRIX

Shiroishi to Peacock July 11, 2001 6:21 a.m.	5.4 5.4.1 5.4.2	Compensation for IntraLATA Toll Traffic IntraLATA Toll Traffic. IntraLATA Toll Traffic is defined as any telephone call that originates and terminates in the same LATA and is billed by the originating Party as a toll call. Compensation for IntraLATA Toll Traffic. For terminating its IntraLATA Toll Traffic on the other Party's network, the originating Party will pay the terminating Party's intrastate or interstate terminating switched access tariff rates as set forth in the effective intrastate or interstate access services tariff, whichever is appropriate. The appropriate charges will be determined by the routing of the call. If BellSouth or AT&T is the other Party's end user's presubscribed interexchange carrier or if an end user uses BellSouth or AT&T as an interexchange carrier on a 101XXXX basis, BellSouth or AT&T will charge the other Party the appropriate tariff charges for originating switched access services.
Shiroishi to Peacock July 18, 2001 7:27 a.m.	~~5.4~~ ~~5.4.1~~ ~~5.4.2~~ 5.3.9	***** Shiroishi "Strikes-Out" Following Language ***** ~~Compensation for IntraLATA Toll Traffic~~ ~~IntraLATA Toll Traffic. IntraLATA Toll Traffic is defined as any telephone call that originates and terminates in the same LATA and is billed by the originating Party as a toll call.~~ ~~Compensation for IntraLATA Toll Traffic.~~ ***** Shiroishi "Strikes-Out" Following Language ***** ~~For terminating its IntraLATA Toll Traffic on the other Party's network, the originating Party will pay the terminating Party's intrastate or interstate terminating switched access tariff rates as set forth in the effective intrastate or interstate access services tariff, whichever is appropriate. The appropriate charges will be determined by the routing of the call.~~ If BellSouth or AT&T is the other Party's end user's presubscribed interexchange carrier or if an end user uses BellSouth or AT&T as an interexchange carrier on a 101XXXX basis, BellSouth or AT&T will charge the other Party the appropriate tariff charges for originating switched access services.
Peacock to Shiroishi July 19, 2001 2:21 a.m.	~~5.4~~ ~~5.4.1~~ ~~5.4.2~~ 5.3.9	~~Compensation for IntraLATA Toll Traffic~~ ~~IntraLATA Toll Traffic. IntraLATA Toll Traffic is defined as any telephone call that originates and terminates in the same LATA and is billed by the originating Party as a toll call.~~ ~~Compensation for IntraLATA Toll Traffic. For terminating its IntraLATA Toll Traffic on the other Party's network, the originating Party will pay the terminating Party's intrastate or interstate terminating switched access tariff rates as set forth in the effective intrastate or interstate access services tariff, whichever is appropriate. The appropriate charges will be determined by the routing of the call.~~***** Peacock "Strike-Out" Remaining Language ***** ~~If BellSouth or AT&T is the other Party's end user's presubscribed interexchange carrier~~

		~~or if an end user uses BellSouth or AT&T as an interexchange carrier on a 101XXXX basis, BellSouth or AT&T will charge the other Party the appropriate tariff charges for originating switched access services.~~
Shiroishi to Peacock July 19, 2001 9:59 a.m.	~~5.4~~ ~~5.4.1~~ ~~5.4.2~~	~~Compensation for IntraLATA Toll Traffic~~ ~~IntraLATA Toll Traffic. IntraLATA Toll Traffic is defined as any telephone call that originates and terminates in the same LATA and is billed by the originating Party as a toll call.~~ ~~Compensation for IntraLATA Toll Traffic. For terminating its IntraLATA Toll Traffic on the other Party's network, the originating Party will pay the terminating Party's intrastate or interstate terminating switched access tariff rates as set forth in the effective intrastate or interstate access services tariff, whichever is appropriate. The appropriate charges will be determined by the routing of the call. If BellSouth or AT&T is the other Party's end user's presubscribed interexchange carrier or if an end user uses BellSouth or AT&T as an interexchange carrier on a 101XXXX basis, BellSouth or AT&T will charge the other Party the appropriate tariff charges for originating switched access services.~~